# AZOL GAS

*Service in Motion*

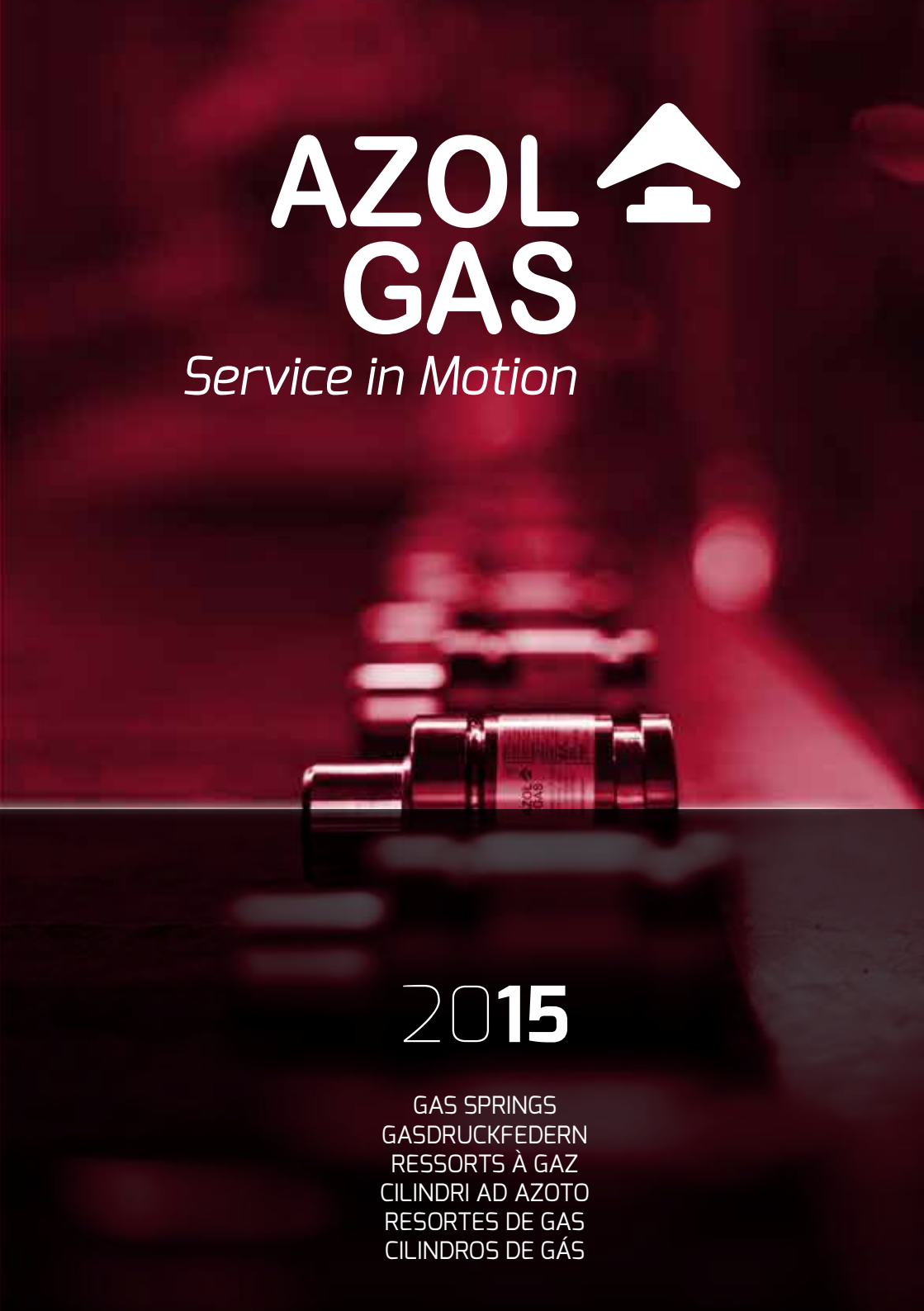

2015

GAS SPRINGS
GASDRUCKFEDERN
RESSORTS À GAZ
CILINDRI AD AZOTO
RESORTES DE GAS
CILINDROS DE GÁS



*Service in Motion* 2015

# AZOL GAS

GAS SPRINGS
GASDRUCKFEDERN
RESSORTS À GAZ
CILINDRI AD AZOTO
RESORTES DE GAS
CILINDROS DE GÁS

# AZOLGAS WORLDWIDE

AZOL GAS

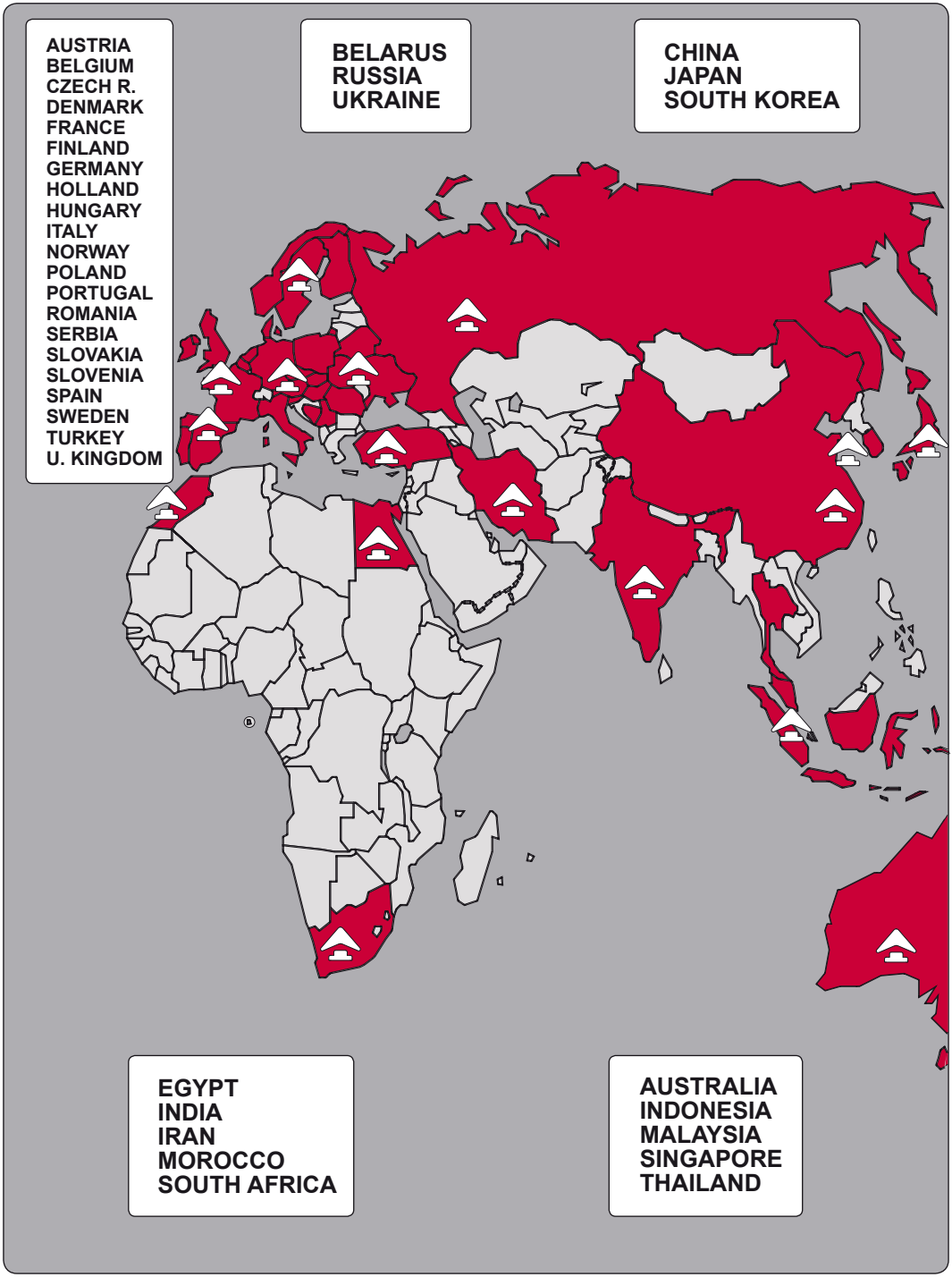

AZOL GAS

# AZOLGAS WORLDWIDE



# NEW




AZOL GAS

| CODE | ITEM | Page |
|---|---|---|
| AFB V2 | New Version Gas Spring | 4 |
| AFH V1 | New Version Gas Spring | 8 |
| AFJ V1 | New Version Gas Spring | 10 |
| AFT V1 | New Version Gas Spring | 24 |
| AS 500 V1 | New Version Gas Spring | 34 |
| AS 600 V1 | New Version Gas Spring | 38 |
| AS 700 V1 | New Version Gas Spring | 42 |
| ASP 500 V1 | New Version Gas Spring | 52 |
| AST 200 V1 | New Version Gas Spring | 56 |
| AST 300 V1 | New Version Gas Spring | 62 |
| CD 1000 V1 | New Version Gas Spring | 120 |
| CD 1500 V1 | New Version Gas Spring | 126 |
| CM 350 V1 | New Version Gas Spring | 158 |
| CM 500 V1 | New Version Gas Spring | 162 |
| CM 600 V1 | New Version Gas Spring | 166 |
| FD 300 | New Gas Spring | 216 |
| FD 750 V1 | New Version Gas Spring | 224 |
| FD 1500 V2 | New Version Gas Spring | 230 |
| FD 5000 V1 | New Version Gas Spring | 240 |
| CK 570 V1 | New Version Gas Spring | 252 |
| CK 750 V1 | New Version Gas Spring | 256 |
| CK 1000 V1 | New Version Gas Spring | 262 |
| CK 1500 V2 | New Version Gas Spring | 268 |
| CK 2500 V1 | New Version Gas Spring | 274 |
| CK 4000 V1 | New Version Gas Spring | 280 |
| CT 550 V1 | New Version Gas Spring | 292 |
| KZ 350 | New Gas Spring | 372 |
| KZ 500 | New Gas Spring | 374 |
| KZ 750 | New Gas Spring | 376 |
| KZ 1000 | New Gas Spring | 380 |
| KZ 1500 | New Gas Spring | 384 |
| KZ 2400 | New Gas Spring | 388 |
| KZ 4200 | New Gas Spring | 392 |
| KZ 6600 | New Gas Spring | 396 |
| CWC 1000 V2 | New Version Gas Spring | 420 |
| CW 2400 V1 | New Version Gas Spring | 432 |
| CWC 2400 V2 | New Version Gas Spring | 436 |
| CW 4200 V1 | New Version Gas Spring | 442 |
| CP 1000 V1 | New Version Gas Spring | 486 |
| CP 2000 V1 | New Version Gas Spring | 490 |
| CP 3000 V1 | New Version Gas Spring | 494 |
| CP 5000 V1 | New Version Gas Spring | 498 |
| CP 8000 V1 | New Version Gas Spring | 502 |
| CS 420 V1 | New Version Gas Spring | 520 |
| CSE 420 V1 | New Version Gas Spring | 524 |
| CS 770 V2 | New Version Gas Spring | 528 |
| CSE 770 V2 | New Version Gas Spring | 532 |
| CS 1000 V1 | New Version Gas Spring | 536 |
| CSE 1000 V1 | New Version Gas Spring | 540 |
| CS 1800 V1 | New Version Gas Spring | 544 |
| CSE 1800 V1 | New Version Gas Spring | 548 |
| CS 3000 V2 | New Version Gas Spring | 552 |
| CSE 3000 V2 | New Version Gas Spring | 556 |
| CS 4700 V1 | New Version Gas Spring | 560 |
| CSE 4700 V1 | New Version Gas Spring | 564 |
| CS 7500 V1 | New Version Gas Spring | 568 |
| CSE 7500 V1 | New Version Gas Spring | 572 |
| CS 11800 V1 | New Version Gas Spring | 576 |
| CSE 11800 V1 | New Version Gas Spring | 580 |
| CS 18300 V1 | New Version Gas Spring | 584 |
| CSE 18300 V1 | New Version Gas Spring | 588 |
| VMD 3000 | New Gas Spring | 640 |
| VMD 5000 | New Gas Spring | 642 |
| VMD 7500 | New Gas Spring | 644 |
| MBFP | New Spring Plunger | 679 |
| MBHC | New Spring Plunger | 682 |
| MBHF | New Spring Plunger | 682 |
| MBHG | New Spring Plunger | 683 |
| MBHS | New Spring Plunger | 683 |
| 600-CPM6 | New Control Panel | 722 |
| 600-CPMC4 | New Control Panel | 722 |
| 600-CPGM | New Control Panel | 723 |
| 600-CPRE | New Control Panel | 723 |
| MN-14-600-40 | New Gauge | 727 |
| 18 MS 1 | New M8x1 Adapter | 735 |
| TNRR | New M12x1,5 Hose | 736 |
| TNRL | New M12x1,5 Hose | 736 |
| TNLL | New M12x1,5 Hose | 736 |
| TNRC | New M12x1,5 Hose | 737 |
| TNCC | New M12x1,5 Hose | 737 |
| TNLC | New M12x1,5 Hose | 737 |
| TNRT | New M12x1,5 Terminal | 738 |
| TNLT | New M12x1,5 Terminal | 738 |
| TNCT | New M12x1,5 Terminal | 738 |
| D_ _ _ | New M12x1,5 Adapter | 738 |
| ADCB | New Compensation Tank Flange | 753 |
| A 550 1/8-M6 | New Draining Tool | 761 |
| LRP | New Locking Ring Tool | 761 |
| DMNL | New Fitting Valve Tool | 762 |
| DDNM | New Fitting Valve Tool | 762 |
| EC 35 | New Charging Unit | 764 |

AZOL GAS

# INDEX


| | | | | |
|---|---|---|---|---|
| GAS SPRINGS |  | *MINI* | **AFB / AFH / AFJ / AFK / AFC / AFNA / AF/ AFT** | 1 - 26 |
| |  | *THREADED* | **AS / ASP / AST** | 27 - 66 |
| |  | *ISO* | **APFA / APFC-H / APF / AG / AGB-H** | 67 - 108 |
| |  | *HEAVY DUTY* | **CD** | 109 - 150 |
| | | | **CM** | 151 - 192 |
| | | | **GN** | 193 - 214 |
| |  | *LOW PROFILE* | **FD** | 215 - 244 |
| | | | **CK** | 245 - 284 |
| | | | **CT / CTN** | 285 - 342 |
| |  | *COMPACT HEIGHT* | **CZ** | 343 - 370 |
| | | | **KZ** | 371 - 400 |
| | | | **CW / CWC** | 401 - 462 |
| | | | **CR** | 463 - 476 |
| |  | *HEAVY LOAD* | **CP** | 477 - 504 |
| | | | **CPH** | 505 - 516 |
| |  | *POWER COMPACT STROKE* | **CS / CSE** | 517 - 590 |
| |  | *SPECIAL APPLICATIONS* | **ROB / ROT / VH / ART** | 591 - 612 |
| |  | *SPEED CONTROL* | **VAM** | 613 - 638 |
| | | | **VMD** | 639 - 646 |
| **GAS STRIPPERS / STOCK LIFTERS** |  | | **EF / M / EX / EXD** | 647 - 708 |
| **SCRAP REMOVER** |  | | **SP-ER** | 709 - 714 |
| **ACCESSORIES** |  | | | 715 - 766 |

# SELECTION GUIDE

AZOL GAS

| SERIES | MODEL | $F_0$ | Ø | S | L1 | Pmax | | STANDARD | Page |
|---|---|---|---|---|---|---|---|---|---|
| MINI  | **AFB V2** | 50 | Ø12 | 7 - 80 | 56 - 205 | 180 | X | | 4 |
| | **AFH V1** | 90 | Ø15 | 7 - 80 | 56 - 205 | 180 | X | | 8 |
| | **AFJ V1** | 90 | Ø19 | 7 - 125 | 56 - 295 | 180 | X | | 10 |
| | **AFK V1** | 100 | Ø20 | 10 - 80 | 74 - 214 | 160 | X | | 12 |
| | **AFC** | 200 | Ø25 | 7 - 125 | 56 - 295 | 180 | X | | 16 |
| | **AFNA** | 200 | Ø25 | 10 - 50 | 65 - 145 | 180 | X | | 20 |
| | **AF V1** | 200 | Ø25 | 12 - 100 | 78 - 254 | 180 | X | | 22 |
| | **AFT V1** | 350 | Ø32 | 7 - 125 | 56 - 295 | 180 | X | | 24 |
| THREADED  | **AS 200** | 200 | M28x1.5 | 10 - 125 | 62 - 292 | 180 | X | | 28 |
| | **AS 300** | 300 | M38x1.5 | 12.7 - 100 | 75.4 - 250 | 150 | X | | 30 |
| | **AS 500 V1** | 500 | M38x1.5 | 10 - 125 | 50 - 280 | 150 | X | | 34 |
| | **AS 600 V1** | 600 | M38x1.5 | 15 - 100 | 85 - 260 | 150 | X | | 38 |
| | **AS 700 V1** | 700 | M45x1.5 | 10 - 125 | 52 - 282 | 150 | X | | 42 |
| | **AS 1000** | 1000 | M50x1.5 | 10 - 125 | 58 - 288 | 160 | X | | 44 |
| | **ASP 250** | 250 | M36x1 | 15 - 100 | 84 - 254 | 150 | X | | 46 |
| | **ASP 300** | 300 | M38x1.5 | 12.7 - 100 | 75.4 - 250 | 150 | X | | 48 |
| | **ASP 500 V1** | 500 | M45x1 | 15 - 100 | 84 - 254 | 150 | X | | 52 |
| | **AST 200 V1** | 200 | Ø25 | 7 - 63 | 46 - 158 | 180 | X | | 56 |
| | **AST 250** | 250 | Ø38 | 12.7 - 100 | 75.4 - 250 | 150 | X | | 58 |
| | **AST 300 V1** | 300 | Ø32 | 7 - 80 | 53 - 199 | 150 | X | | 62 |
| | **AST 1000** | 1000 | Ø50 | 13 - 125 | 64 - 288 | 150 | X | | 64 |
| ISO  | **APFA 150** | 150 | Ø32 | 10 - 125 | 70 - 300 | 180 | X | | 68 |
| | **APFA 250** | 250 | Ø38 | 10 - 125 | 70 - 300 | 150 | ✓ | | 72 |
| | **APF 500** | 500 | Ø45 | 10 - 160 | 105 - 405 | 150 | ✓ | | 78 |
| | **AG 750** | 750 | Ø50 | 12.7 - 300 | 120.4 - 695 | 150 | ✓ | | 82 |
| | **AG 1500** | 1500 | Ø75 | 12.7 - 300 | 135.4 - 710 | 150 | ✓ | | 86 |
| | **AG 3000** | 3000 | Ø95 | 12.7 - 300 | 145.4 - 720 | 150 | ✓ | | 90 |
| | **AG 5000** | 5000 | Ø120 | 12.7 - 300 | 165.4 - 740 | 150 | ✓ | | 94 |
| | **AG 7500** | 7500 | Ø150 | 12.7 - 300 | 180.4 - 755 | 150 | ✓ | | 98 |
| | **AG 10000** | 10000 | Ø195 | 12.7 - 300 | 185.4 - 760 | 150 | ✓ | | 102 |
| HEAVY DUTY  | **CD 300 V1** | 300 | Ø32 | 10 - 125 | 70 - 300 | 150 | ✓ | | 110 |
| | **CD 500 V1** | 500 | Ø38 | 10 - 125 | 70 - 300 | 150 | ✓ | | 112 |
| | **CD 700** | 700 | Ø45 | 12.7 - 160 | 110.4 - 405 | 150 | ✓ | | 114 |
| | **CD 1000 V1** | 1000 | Ø50 | 13 - 300 | 121 - 695 | 150 | ✓ | | 120 |
| | **CD 1500 V1** | 1500 | Ø63 | 25 - 200 | 145 - 495 | 150 | ✓ | | 126 |
| | **CD 2400** | 2400 | Ø75 | 25 - 300 | 160 - 710 | 150 | ✓ | | 130 |
| | **CD 4200** | 4200 | Ø95 | 25 - 300 | 170 - 720 | 150 | ✓ | | 134 |
| | **CD 6600** | 6600 | Ø120 | 25 - 300 | 190 - 740 | 150 | ✓ | | 138 |
| | **CD 9600** | 9600 | Ø150 | 25 - 300 | 205 - 755 | 150 | ✓ | | 142 |
| | **CD 18500** | 18500 | Ø195 | 25 - 300 | 210 - 760 | 150 | ✓ | | 146 |
| | **CM 200** | 200 | Ø25 | 10 - 80 | 80 - 220 | 180 | X | | 152 |
| | **CM 300** | 300 | Ø32 | 12 - 100 | 84 - 260 | 150 | ✓ | | 154 |
| | **CM 350 V1** | 350 | Ø32 | 10 - 80 | 70 - 210 | 150 | ✓ | | 158 |
| | **CM 500 V1** | 500 | Ø38 | 10 - 100 | 75 - 260 | 150 | ✓ | | 162 |
| | **CM 600 V1** | 600 | Ø45 | 12 - 100 | 84 - 260 | 150 | ✓ | | 166 |
| | **CM 1000** | 1000 | Ø50 | 10 - 200 | 105 - 495 | 160 | ✓ | | 168 |
| | **CM 1500** | 1500 | Ø63 | 10 - 200 | 105 - 495 | 150 | ✓ | | 172 |
| | **CM 2500** | 2500 | Ø75 | 10 - 200 | 115 - 510 | 160 | ✓ | | 176 |
| | **CM 4000** | 4000 | Ø95 | 25 - 200 | 155 - 530 | 150 | ✓ | | 180 |
| | **CM 6500** | 6500 | Ø120 | 25 - 200 | 165 - 540 | 150 | ✓ | | 184 |
| | **CM 10000** | 10000 | Ø150 | 25 - 200 | 186 - 536 | 160 | ✓ | | 188 |
| | **GN 750** | 750 | Ø50 | 12.5 - 175 | 95 - 420 | 150 | ✓ | | 194 |
| | **GN 1500** | 1500 | Ø75 | 25 - 200 | 135 - 485 | 150 | ✓ | | 198 |
| | **GN 3000** | 3000 | Ø95 | 25 - 225 | 145 - 545 | 150 | ✓ | | 202 |
| | **GN 5000** | 5000 | Ø120 | 25 - 250 | 152.5 - 602.5 | 150 | ✓ | | 206 |
| | **GN 7500** | 7500 | Ø150 | 25 - 250 | 155 - 605 | 150 | ✓ | | 210 |
| LOW PROFILE | **FD 300** | 300 | Ø38 | 6.3 - 125 | 62.6 - 125 | 150 | ✓ | | 216 |
| | **FD 500** | 500 | Ø45 | 6 - 125 | 62 - 300 | 150 | ✓ | | 218 |
| | **FD 750 V1** | 750 | Ø50 | 6 - 125 | 62 - 300 | 150 | ✓ | | 224 |
| | **FD 1500 V2** | 1500 | Ø75 | 25 - 100 | 110 - 260 | 150 | ✓ | | 230 |
| | **FD 3000** | 3000 | Ø95 | 25 - 125 | 120 - 320 | 150 | ✓ | | 234 |
| | **FD 5000 V1** | 5000 | Ø120 | 25 - 100 | 140 - 290 | 150 | ✓ | | 240 |

AZOL GAS

# SELECTION GUIDE

| SERIES | MODEL | $F_0$ | Ø | S | L1 | Pmax | | STANDARD | Page |
|---|---|---|---|---|---|---|---|---|---|
| LOW PROFILE   | **CK 200 V1** | 200 | Ø25 | 5 - 100 | 42 - 232 | 180 | ✗ | | 246 |
| | **CK 300 V1** | 300 | Ø32 | 7 - 100 | 53 - 239 | 150 | ✗ | | 248 |
| | **CK 570 V1** | 570 | Ø38 | 5 - 125 | 47 - 287 | 150 | ✗ | | 252 |
| | **CK 750 V1** | 750 | Ø45 | 12 - 100 | 74 - 250 | 150 | | | 256 |
| | **CK 1000 V1** | 1000 | Ø50 | 12 - 100 | 74 - 250 | 160 | | | 262 |
| | **CK 1500 V2** | 1500 | Ø63 | 12 - 100 | 84 - 260 | 150 | | | 268 |
| | **CK 2500 V1** | 2500 | Ø75 | 12 - 100 | 84 - 260 | 160 | | | 274 |
| | **CK 4000 V1** | 4000 | Ø95 | 25 - 100 | 120 - 270 | 150 | | | 280 |
| | **CT 200 V1** | 200 | Ø25 | 7 - 80 | 47 - 193 | 180 | ✗ | | 286 |
| | **CT 300 V1** | 300 | Ø32 | 5 - 100 | 47 - 237 | 150 | ✗ | | 288 |
| | **CT 550 V1** | 550 | Ø38 | 12 - 125 | 56 - 282 | 150 | ✗ | | 292 |
| | **CT 750** | 750 | Ø50 | 12 - 125 | 62 - 288 | 160 | | | 294 |
| | **CT 1000** | 1000 | Ø50 | 5 - 125 | 48 - 288 | 160 | | | 302 |
| | **CT 1500** | 1500 | Ø63 | 12 - 125 | 76 - 302 | 150 | | | 310 |
| | **CT 2500** | 2500 | Ø75 | 12 - 200 | 78 - 454 | 150 | | | 318 |
| | **CT 3000** | 3000 | Ø75 | 12 - 200 | 78 - 454 | 150 | | | 326 |
| | **CT 5000** | 5000 | Ø105 | 12 - 200 | 84 - 460 | 150 | | | 334 |
| COMPACT HEIGHT   | **KZ 350** | 350 | Ø32 | 10 - 125 | 60 - 290 | 180 | | | 372 |
| | **KZ 500** | 500 | Ø38 | 10 - 125 | 60 - 290 | 150 | | | 374 |
| | **KZ 750** | 750 | Ø45 | 10 - 125 | 67 - 297 | 150 | | | 376 |
| | **KZ 1000** | 1000 | Ø50 | 13 - 125 | 78 - 302 | 150 | | | 380 |
| | **KZ 1500** | 1500 | Ø63 | 13 - 125 | 78 - 302 | 150 | | | 384 |
| | **KZ 2400** | 2400 | Ø75 | 16 - 125 | 91 - 309 | 150 | | | 388 |
| | **KZ 4200** | 4200 | Ø95 | 16 - 125 | 94 - 312 | 150 | | | 392 |
| | **KZ 6600** | 6600 | Ø120 | 16 - 125 | 104 - 322 | 150 | | | 396 |
| | **CW 170 V1** | 170 | Ø19 | 7 - 125 | 44 - 285 | 180 | ✗ | | 402 |
| | **CW 320 V1** | 320 | Ø25 | 7 - 125 | 44 - 285 | 180 | ✗ | | 404 |
| | **CW 350** | 350 | Ø32 | 10 - 125 | 50 - 280 | 180 | | | 406 |
| | **CW 500** | 500 | Ø38 | 10 - 125 | 50 - 280 | 150 | | | 408 |
| | **CW 750** | 750 | Ø45 | 10 - 125 | 52 - 282 | 150 | | | 410 |
| | **CW 1000 V1** | 1000 | Ø50 | 13 - 125 | 64 - 288 | 150 | | | 416 |
| | **CW 1500** | 1500 | Ø63 | 13 - 125 | 70 - 294 | 150 | | | 424 |
| | **CW 2400 V1** | 2400 | Ø75 | 5 - 125 | 55 - 295 | 150 | | | 432 |
| | **CW 4200 V1** | 4200 | Ø95 | 16 - 125 | 90 - 308 | 150 | | | 442 |
| | **CW 6600** | 6600 | Ø120 | 16 - 125 | 100 - 318 | 150 | | | 446 |
| | **CW 9500** | 9500 | Ø150 | 19 - 125 | 116 - 328 | 150 | | | 450 |
| | **CW 11800** | 11800 | Ø150 | 19 - 125 | 116 - 328 | 150 | | | 454 |
| | **CW 20000** | 20000 | Ø195 | 19 - 125 | 148 - 360 | 150 | | | 458 |
| HEAVY LOAD   | **CP 150** | 150 | Ø19 | 10 - 80 | 75 - 220 | 160 | ✗ | | 478 |
| | **CP 300** | 300 | Ø25 | 10 - 80 | 75 - 225 | 170 | ✗ | | 480 |
| | **CP 500** | 500 | Ø32 | 10 - 80 | 75 - 230 | 200 | ✗ | | 482 |
| | **CP 1000 V1** | 1000 | Ø38 | 10 - 80 | 75 - 240 | 205 | ✗ | | 486 |
| | **CP 2000 V1** | 2000 | Ø50 | 10 - 80 | 90 - 255 | 210 | ✗ | | 490 |
| | **CP 3000 V1** | 3000 | Ø63 | 10 - 80 | 95 - 255 | 190 | ✗ | | 494 |
| | **CP 5000 V1** | 5000 | Ø75 | 10 - 80 | 100 - 275 | 200 | ✗ | | 498 |
| | **CP 8000 V1** | 8000 | Ø95 | 10 - 80 | 110 - 290 | 180 | ✗ | | 502 |
| | **CPH 850** | 850 | Ø38 | 12 - 80 | 74 - 225 | 175 | ✗ | | 506 |
| | **CPH 1250** | 1250 | Ø45 | 12 - 80 | 79 - 230 | 175 | ✗ | | 508 |
| | **CPH 1700** | 1700 | Ø50 | 12 - 80 | 84 - 235 | 175 | ✗ | | 510 |
| | **CPH 2800** | 2800 | Ø63 | 12 - 80 | 94 - 250 | 175 | ✗ | | 512 |
| | **CPH 4300** | 4300 | Ø75 | 12 - 80 | 94 - 250 | 175 | ✗ | | 514 |
| POWER COMPACT STROKE   | **CS 420 V1** | 420 | Ø25 | 6 - 50 | 56 - 195 | 165 | ✗ | | 520 |
| | **CS 770 V2** | 770 | Ø32 | 6 - 50 | 63 - 195 | 150 | ✗ | | 528 |
| | **CS 1000 V1** | 1000 | Ø38 | 6 - 50 | 61 - 230 | 150 | ✗ | | 536 |
| | **CS 1800 V1** | 1800 | Ø50 | 6 - 50 | 66 - 220 | 150 | ✗ | | 544 |
| | **CS 3000 V2** | 3000 | Ø63 | 10 - 50 | 85 - 205 | 150 | ✗ | | 552 |
| | **CS 4700 V1** | 4700 | Ø75 | 10 - 50 | 80 - 240 | 150 | ✗ | | 560 |
| | **CS 7500 V1** | 7500 | Ø95 | 10 - 50 | 90 - 255 | 150 | ✗ | | 568 |
| | **CS 11800 V1** | 11800 | Ø120 | 10 - 50 | 100 - 260 | 150 | ✗ | | 576 |
| | **CS 18300 V1** | 18300 | Ø150 | 10 - 50 | 110 - 270 | 150 | ✗ | | 584 |

# SELECTION CHART

AZOL GAS

| Ø \ $F_0$ | 50 | 90 - 100 | 150 - 200 | 250 | 300 - 350 | 420 | 500 - 600 | 700 - 850 | 1000 - 1250 | 1500 |
|---|---|---|---|---|---|---|---|---|---|---|
| 12 | AFB | | | | | | | | | |
| 15 | | AFH | | | | | | | | |
| 19 | | AFJ | CP 150<br>CW 170 | | | | | | | |
| 20 | | AFK | | | | | | | | |
| 25 | | | AFC<br>AFNA<br>AF<br>AST 200<br>CM 200<br>CK 200<br>CT 200 | | CP 300<br>CW 320 | CS 420<br>CSE 420 | | | | |
| M28x1.5 | | | AS 200 | | | | | | | |
| 32 | | | APFA 150<br>APFC-H 150 | | AST 300<br>CD 300<br>CM 300<br>CK 300<br>CT 300<br>AFT<br>CM 350<br>KZ 350<br>CW 350 | | CP 500 | CS 770<br>CSE 770 | | |
| M36x1 | | | | ASP 250 | | | | | | |
| 38 | | | | AST 250<br>APFA 250<br>APFC-H 250 | FD 300 | | CD 500<br>CM 500<br>KZ 500<br>CW 500<br>CT 550<br>CK 570 | CPH 850 | CP 1000<br>CS 1000<br>CSE 1000 | |
| M38x1.5 | | | | | AS 300<br>ASP 300 | | AS 500<br>AS 600 | | | |
| 45 | | | | | | | APF 500<br>FD 500<br>CM 600 | CD 700<br>CK 750<br>KZ 750<br>CW 750<br>CWC 750 | CPH 1250 | |
| M45x1 | | | | | | | ASP 500 | | | |
| M45x1.5 | | | | | | | | AS 700 | | |
| 50 | | | | | | | | AG 750<br>GN 750<br>FD 750<br>CT 750 | AST 1000<br>CD 1000<br>CM 1000<br>CK 1000<br>CT 1000<br>KZ 1000<br>CW 1000<br>CWC 1000 | |
| M50x1.5 | | | | | | | | | AS 1000 | |
| 63 | | | | | | | | | | CD 1500<br>CM 1500<br>CK 1500<br>CT 1500<br>KZ 1500<br>CW 1500<br>CWC 1500 |
| 75 | | | | | | | | | | AG 1500<br>GN 1500<br>FD 1500 |
| 95 | | | | | | | | | | |
| 105 | | | | | | | | | | |
| 120 | | | | | | | | | | |
| 150 | | | | | | | | | | |
| 195 | | | | | | | | | | |

AZOL GAS

# SELECTION CHART

| Ø \ $F_0$ | 1700 - 2000 | 2400 - 2500 | 2800 - 3000 | 4000 - 4300 | 4700 - 5000 | 6500 - 6600 | 7500 - 8000 | 9500 - 10000 | 11800 | 18300 - 20000 |
|---|---|---|---|---|---|---|---|---|---|---|
| 12 | | | | | | | | | | |
| 15 | | | | | | | | | | |
| 19 | | | | | | | | | | |
| 20 | | | | | | | | | | |
| 25 | | | | | | | | | | |
| M28x1.5 | | | | | | | | | | |
| 32 | | | | | | | | | | |
| M36x1 | | | | | | | | | | |
| 38 | | | | | | | | | | |
| M38x1.5 | | | | | | | | | | |
| 45 | | | | | | | | | | |
| M45x1 | | | | | | | | | | |
| M45x1.5 | | | | | | | | | | |
| 50 | CPH 1700<br>CS 1800<br>CSE 1800<br>CP 2000 | | | | | | | | | |
| M50x1.5 | | | | | | | | | | |
| 63 | | | CPH 2800<br>CP 3000<br>CS 3000<br>CSE 3000 | | | | | | | |
| 75 | | CD 2400<br>KZ 2400<br>CW 2400<br>CWC 2400<br>CM 2500<br>CK 2500<br>CT 2500 | CT 3000 | CPH 4300 | CS 4700<br>CSE 4700<br>CP 5000 | | | | | |
| 95 | | | AG 3000<br>GN 3000<br>FD 3000 | CM 4000<br>CK 4000<br>CD 4200<br>KZ 4200<br>CW 4200 | | | CS 7500<br>CSE 7500<br>CP 8000 | | | |
| 105 | | | | | CT 5000 | | | | | |
| 120 | | | | | AG 5000<br>GN 5000<br>FD 5000 | CM 6500<br>CD 6600<br>KZ 6600<br>CW 6600 | | | CS 11800<br>CSE 11800 | |
| 150 | | | | | | | AG 7500<br>GN 7500 | CW 9500<br>CD 9600<br>CM 10000 | CW 11800 | CS 18300<br>CSE 18300 |
| 195 | | | | | | | | AG 10000 | | CD 18500<br>CW 20000 |

# INDEX

AZOL GAS

MINI



**AFB**
Page 2 - 4



**AFH**
Page 6 - 8



**AFJ**
Page 10



**AFK**
Page 12



**AFD**
Page 14



**AFC**
Page 16



**AFC-H**
Page 18



**AFNA**
Page 20



**AF**
Page 22



**AFT**
Page 24

THREADED



**AS**
Page 28 - 44



**ASP**
Page 46 - 52



**AST**
Page 54 - 64

AZOL GAS

# INDEX


| | | | |
|---|---|---|---|
| ISO |  **APF** Page 68 - 78 |  **AG/AGB-H** Page 82 - 103 | |
| HEAVY DUTY |  **CD** Page 110 - 146 |  **CM** Page 152 - 188 |  **GN** Page 194 - 210 |
| LOW PROFILE |  **FD** Page 216 - 246 |  **CK** Page 246 - 280 |  **CT** Page 286 - 334 |
|  **CTN** Page 298 - 338 | | | |

# INDEX

AZOL GAS

## COMPACT HEIGHT



**KZ**

Page 372 - 396



**CW**

Page 402 - 458



**CWC**

Page 412 - 436

## HEAVY LOAD



**CP**

Page 478 - 502



**CPH**

Page 506 - 514

## POWER COMPACT STROKE



**CS**

Page 518 - 584



**CSE**

Page 522 - 588

## SPECIAL APPLICATIONS



**ROB/ROT**

Page 592 - 599



**VH**

Page 600 - 604



**ART**

Page 606 - 611

AZOL GAS

# INDEX


SPEED CONTROL



**VAM**
Page 614 - 634



**VMD**
Page 640 - 644

GAS STRIPPERS/ STOCK LIFTERS



**EF**
Page 648 - 670



**M**
Page 672 - 692

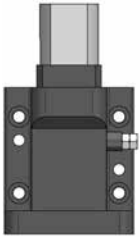

**EX**
Page 694 - 700



**EXD**
Page 702 - 705



**PME/PGE/PGN/PGH**
Page 706 - 707

SCRAP REMOVER

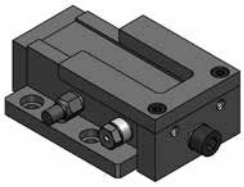

**SP-ER**
Page 710 - 713

ACCESSORIES

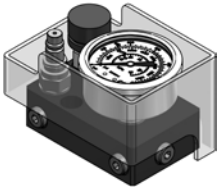

**600-CP**
Page 720 - 723

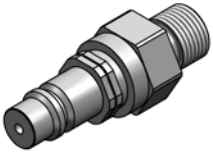

**Q_M**
Page 726



**Q_F**
Page 726

# INDEX

AZOL GAS


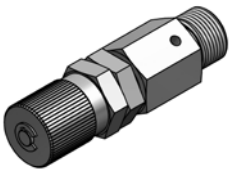

VD
Page 726



MN
Page 726 - 727



SPS
Page 727



PL_
Page 728 - 729

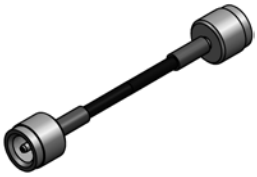

G1/8”
Page 730 - 731



GST
Page 731



GPT
Page 731



GRT
Page 731

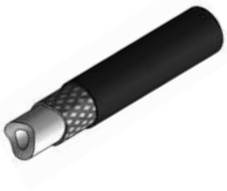

GF 02
Page 731



RBP 5
Page 731



CM 1/8”
Page 731



SKK
Page 732



CF
Page 732 - 733



M8x1
Page 734



BKRT
Page 734



KR/KC/KT
Page 735

AZOL GAS

# INDEX




**_ _BK**
Page 735



**M12x1,5**
Page 736 - 737



**TNRT**
Page 738



**TNLT**
Page 738

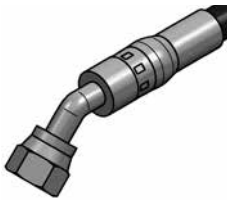

**TNCT**
Page 738



**GF 05**
Page 738



**RBP 10**
Page 738



**D_ _D**
Page 738 - 739



**7/16”**
Page 740



**TFRT**
Page 741



**TFLT**
Page 741



**7/16” MINIMESS**
Page 742

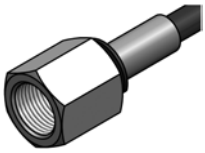

**SMRT**
Page 743



**7_ _ _**
Page 744 - 745



**9/16”**
Page 746



**MCRT**
Page 747

# INDEX

AZOL GAS




**MCLT**
Page 747

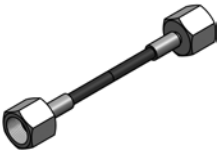

**9/16" MINIMESS**
Page 748

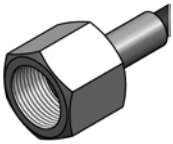

**GTRT**
Page 749



**GTLT**
Page 749



**9_ _ _**
Page 750 - 751



**DFC**
Page 752



**ADCB**
Page 753

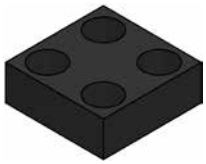

**SP _ _**
Page 754 - 755

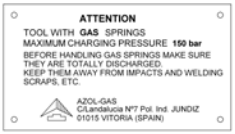


**PI**
Page 756 - 759



**_ GA _**
Page 760



**LM**
Page 760



**DALL**
Page 761



**DPA 5**
Page 761



**T _ _**
Page 761



**A 550 1/8-M6**
Page 761



**LRP**
Page 761

AZOL GAS

# INDEX




**DIN 7757**
Page 762



**XTC-M6**
Page 762



**A-800**
Page 762



**ALXTC**
Page 762



**DMNL**
Page 762



**DDNM**
Page 762



**DBNA**
Page 763



**EC 35**
Page 764



**LTH 600**
Page 765



**18 HI 4-Q**
Page 765



**06 HI 8-Q**
Page 765



**EC 03**
Page 765



**A 400 C**
Page 765

AZOL GAS

# INDEX

1-BENEFITS _____ Page XXII

2-OPERATING INSTRUCTIONS _____ Page XXIV

3-HOW TO USE THE CATALOGUE _____ Page XXX

4-INSTALLATION EXAMPLES _____ Page XXXVI

5-COLOR CODE _____ Page XXXVIII

6-HOSED SYSTEMS _____ Page XL

7-TEMPERATURE _____ Page XLII

8-SIDE LOADS (FR / FS) _____ Page XLIV

8.1-FR (FLEX ROD) _____ Page XLIV

8.2-FS (FLEX SIDELOAD) _____ Page XLVI

9-REPAIR KIT _____ Page XLVIII

# BENEFITS

AZOL GAS

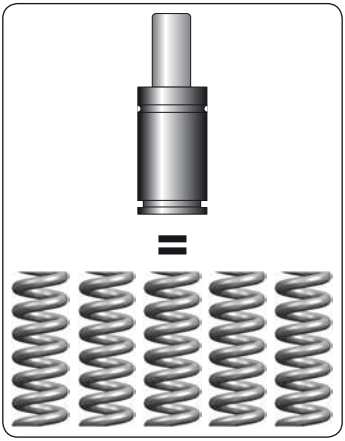

| | |
|---|---|
| ENG | Reduction of surface area used, height, and volume occupied. |
| DEU | Beansprucht weniger platz, Höhe und volumen. |
| FRA | Réduction de la surface occupée, de l'espace en hauteur, et du volume total occuupée. |
| ITA | Riduzione della superficie occupata, dello spazio in altezza, del volume occupato. |
| ESP | Reducción de la superficie usada, de la altura, y del volumen ocupado. |
| POR | Redução da superficie ocupada, do espaço en altura, del volumen ocupado. |

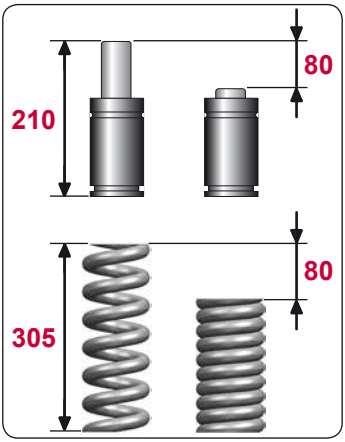


| | |
|---|---|
| ENG | Considerable height reduction for the same working deflection and force. Compact tool construction. |
| DEU | Im allgemeinen beträchtliche Verminderung der Höhe, bei gleichem Hub und gleicher Kraft. Kompaktere Werkzeug konstruction. |
| FRA | Réducion importante des encombrements en hauteur avec une course et une force équivalente. Construction plus compacte de l'outillage. |
| ITA | Notevole riduzione degli ingombri in altezza a parità di forza e corsa. Construzione dello stampo più compatta. |
| ESP | Reducción notable de la altura para fuerzas y carreras equivalentes. Construcción más compacta del troquel. |
| POR | Redução notável em altura com igual força e curso. Construção mais compacta da Ferramenta. |

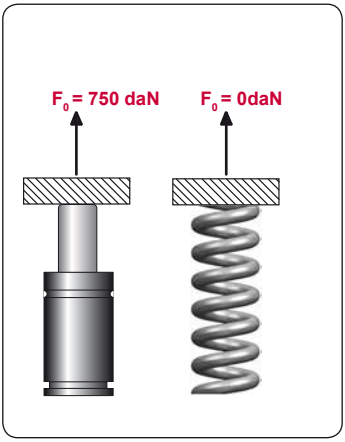


| | |
|---|---|
| ENG | Considerable reduction of retaining devices to preload. No preload required. |
| DEU | Kein Bedarf an Vorrichtungen für Vorspannen, Führung und Aufnahme. Beseitigung der Vorspannung. |
| FRA | Réduction importante du nombre de dispositifs de précharge et guidage. Elimination de la précharge. |
| ITA | Eliminazione dei dispositivi di precarico e guidaggio. Eliminazione precarico. |
| ESP | Eliminación de los dispositivos de precarga y guíado. Eliminación de la precarga. |
| POR | Eliminação de dispositivos de pré-carga e guidamento. Eliminação da pré-carga. |

AZOL GAS

# BENEFITS

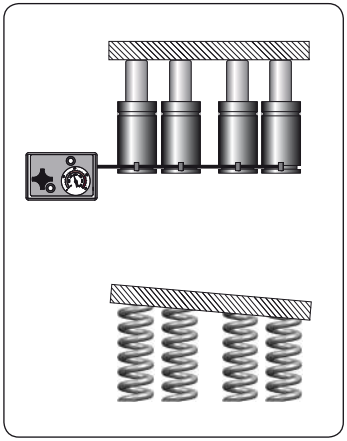

| | |
|---|---|
| ENG | Always the same force on each contact point. Forces may be positioned exactly where required. System may be continually pressure monitored. |
| DEU | Stets ausgeglichene und gleichförmige Kraft an allen Kontaktpunkten. Exakt an der gewünschten Stelle des Gesenks anwendbare Kraft. Ständige Sichtanzeige des Betriebsdrucks. |
| FRA | Force tojours équilibrée et égale en tous points de contact. Force que l'on peut positionner exactement là où elle est exigée dans l'outil. Visualisation continue de la pression dans le système. |
| ITA | Forza sempre bilanciata in tutti i punti di contatto. Forza posizionabile esattamente dove richiesto nello stampo. Visualizzazione continua della pressione. |
| ESP | Fuerza siempre equilibrada en cada punto de contacto. Fuerza posicionable en el troquel donde se require exactamente. Visualización continua de la presión. |
| POR | Força sempre equilibrada em todos os pontos de contacto. Força posicionáve exactamente onde é necessária na Ferramenta. Visualização continua da pressão. |

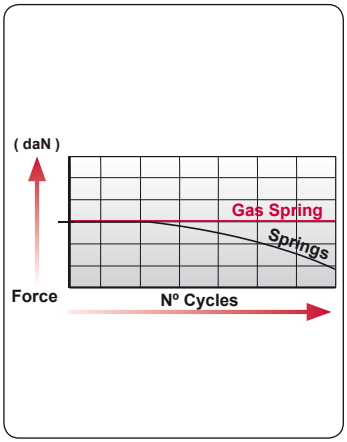


| | |
|---|---|
| ENG | Controlled production conditions on piece-parts during forming and drawing operations. Less rejection of piece-parts. |
| DEU | Bessere Kontrolle des Werkstucks während den Phasen des Formens und des Ziehens. Bessere qualität der fertigen Werkstücke. Weniger Ausschuss. |
| FRA | Un meilleur contrôle de la pièce pendant les phases de découpage et d'emboutissage. Une quantité moindre de rebuts en production. |
| ITA | Migliore controllo del materiale durante le fasi di formatura e imbutitura. Migliore qualità dei pezzi stampati. Minori scarti di produzione. |
| ESP | Mayor control de las condiciones de producción durante las operaciones de conformado y embutición. Mejor calidad de las piezas. Menores rechazos en piezas. |
| POR | Melhor controlo dos materiais durante a fase de formação e de cunhagem. Melhor qualidade das peças estampadas. Menores desperdicios na produção. |

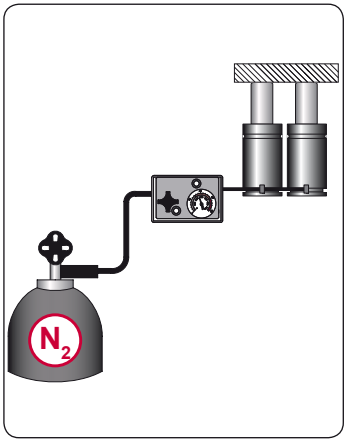


| | |
|---|---|
| ENG | Gas springs applied to provide the real forces required. Assurance of defined forces. The same cylinder may be re-used for different applications. |
| DEU | Anpassung der Zylinder an die effektiv erforderliche Kraft. Gewissheit der definierten Kräfte. Verwendung desselben Zylinders für unterschiedliche Arbeiten. |
| FRA | Adaptation des ressorts à gaz aux forces réellement requises. Certitude des forces définies. Utilisation d'un même ressort à gaz dans des travaux différents. |
| ITA | Adeguamento dei cilindri alle forze realmente richieste. Utilizzo di uno stesso cilindro in lavori diversi. |
| ESP | Adecuación de los cilindros a las fuerzas realmente necesarias. Utilización de un mismo cilindro en trabajos distintos. |
| POR | Adaptação dos cilindros a las forças realmente necessárias. Utilização do mesmo cilindro em diferentes trabalhos. |

# OPERATING INSTRUCTIONS

AZOL GAS

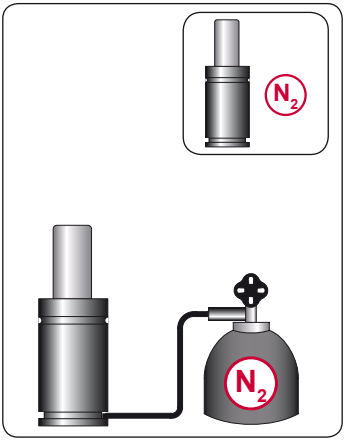


| | |
|---|---|
| ENG | Charge only with NITROGEN ($N_2$). |
| DEU | Gasdruckfedern dürfen nur mit Stickstoff gefüllt werden. |
| FRA | Charge seulement avec du GAZ AZOTE ($N_2$). |
| ITA | Caricare soltanto con GAS AZOTO ($N_2$). |
| ESP | Cargar únicamente con GAS NITROGENO ($N_2$). |
| POR | Carregar somente com GÁS de NITROGÊNIO ($N_2$). |

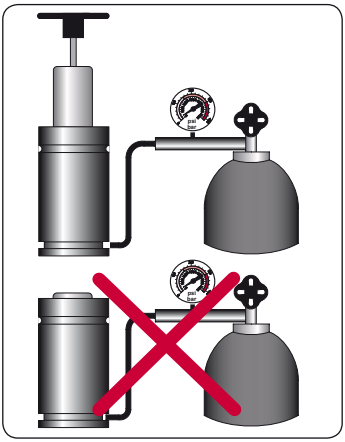

| | |
|---|---|
| ENG | Never fill a gas spring when the piston rod is not fully extended. |
| DEU | Befüllung der Gasdruckfeder nur bei voll ausgefahrener Kolbenstange. |
| FRA | Ne remplissez jamais un ressort où la tige n'est pas entièrement sortie. |
| ITA | Caricare il cilindro ad azoto solo quando lo stelo e' completamente estratto. |
| ESP | No cargar un cilindro de gas si el vástago no está completamente extendido. |
| POR | Não carregue o cilindro se a haste não estiver totalmente fora do cilindro. |

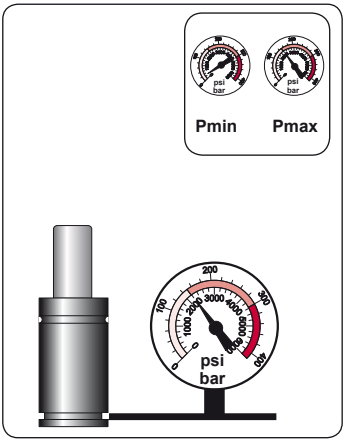


| | |
|---|---|
| ENG | Charge the gas springs between the minimum and the maximum allowable pressure. |
| DEU | Gasdruckfedern dürfen nur zwischen dem minimalen und maximalen zulässigen Fülldruck befüllt werden. |
| FRA | Chargez le ressort à gaz du minimum jusqu'à la pression maximale autorisée. |
| ITA | Caricare il cilindro ad azoto entro la pressione minima e massima autorizzata. |
| ESP | Cargar el cilindro de gas entre la presión mínima y máxima permitida. |
| POR | Sempre carregue o cilindro dentro do pressão mínimo e máximo autorizado. |

AZOL GAS

# OPERATING INSTRUCTIONS

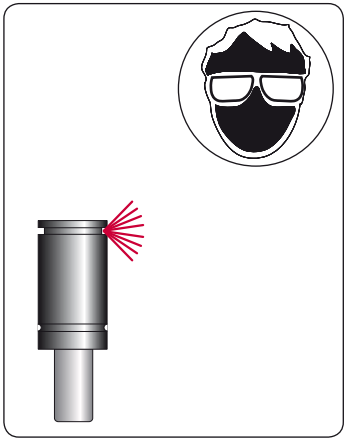

| | |
|---|---|
| ENG | When discharging a gas spring point the gas flow away from operator or anybody else. |
| DEU | Beim Entladen Ventil nicht auf Personen richten. |
| FRA | Pendant la décharge, dirigez l'écoulement de gaz à l'écart de l'opérateur ou d'autre personne. |
| ITA | Durante lo scarico, orientare il flusso del gas in direzione opposta all'operatore ad altra persona. |
| ESP | Durante la descarga, orientar el flujo de gas fuera del alcance del operador o de cualquier persona. |
| POR | Durante a descarga do cilindro aponte o fluxo de gás fora do alcance do operador ou qualquer outra pessoa. |

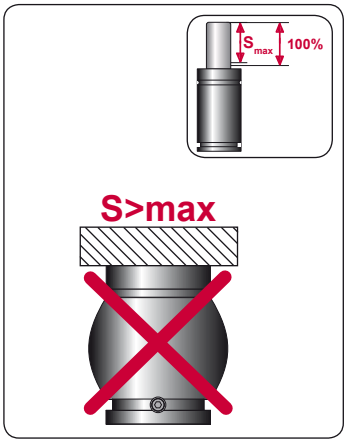


| | |
|---|---|
| ENG | Maximum recommended stroke 90%. Overstroke >100% would cause damages to the cylinder and serious risks. |
| DEU | Es wird empfohlen, eine 10%ige Hubreserve einzuplanen. Ein Überhub führt zur Zerstörung der Gasdruckfeder mit großen Risiken für Gesundheit und Leben von Personen. |
| FRA | Course recommandée maximale 90%. Une course au dessus de 100% causerait des dommages au cylindre et de graves risques. |
| ITA | Corsa massima suggerita 90%. Una corsa > 100% danneggia il cilindro e provoca gravi rischi. |
| ESP | Carrera máxima recomendada 90%. Excesos de carrera > 100% causarían daños al cilindro y graves riesgos. |
| POR | Curso de trabalho máximo recomendado de 90%. Curso maio que 100% causará danos ao cilindro e riscos graves. |

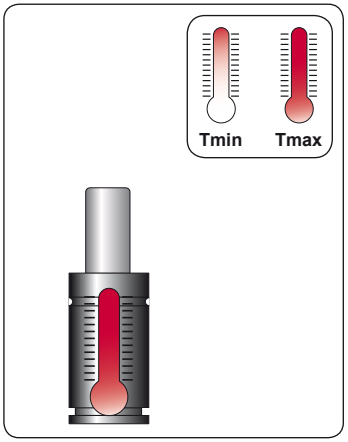


| | |
|---|---|
| ENG | Operating temperature. |
| DEU | Arbeitstemperatur. |
| FRA | Température de fonctionnement. |
| ITA | Temperatura di funzionamento. |
| ESP | Temperatura de funcionamiento. |
| POR | Temperatura de funcionamento. |

# OPERATING INSTRUCTIONS

AZOL GAS

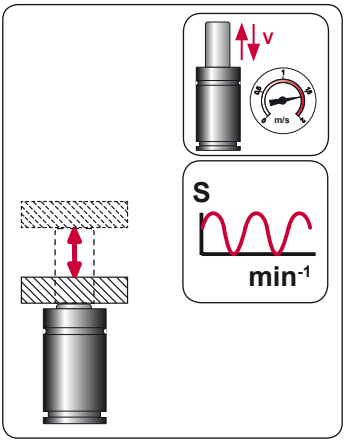


| | |
|---|---|
| ENG | Do not exceed the maximum allowed stroke speed.<br>Maximum allowed cycles per minute should never be exceeded. |
| DEU | Überschreiten Sie nicht die maximal zulässige Kolbengeschwindigkeit.<br>Die maximale Hubfrequenz sollte nicht überschritten werden. |
| FRA | Ne dépassez pas la vitesse maximale de course autorisée.<br>Les cycles par minute maximales autorisées ne doit jamais être dépassée. |
| ITA | Non superare la velocità massima di corsa autorizzata.<br>I cicli massime autorizzate al minuto non deve mai essere superata. |
| ESP | No superar la velocidad máxima de carrera.<br>El número de ciclos por minuto permitidos no debe superarse. |
| POR | Não exceda a velocidade máxima do curso autorizada.<br>Os ciclos máximos autorizados por minuto não deve ser excedido. |

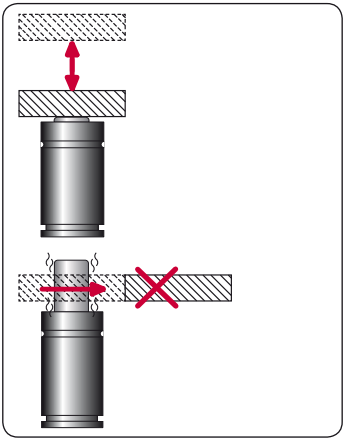

| | |
|---|---|
| ENG | Avoid freely release of the piston rod, this would cause damages to the gas spring. |
| DEU | Ein freier Rückhub muss vermieden werden, um Beschädigungen an der Gasdruckfeder zu vermeiden. |
| FRA | Évitez le dégagement libre de la tige de piston, ceci endommagerait le ressort à gaz. |
| ITA | Evitare il ritorno libero dello stelo, per non danneggiare il cilindro ad azoto. |
| ESP | Evitar el retorno libre del vástago, esto dañaría al cilindro de gas. |
| POR | Evite que a haste trabalhe livremente, isto causará danos ao cilindro. |

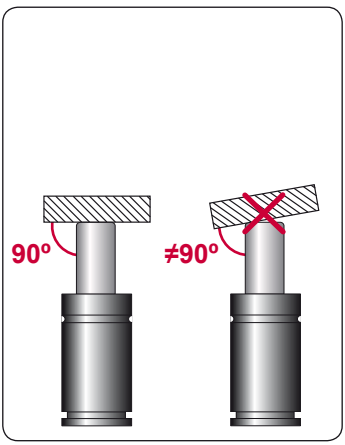


| | |
|---|---|
| ENG | Gas springs must always work completely perpendicular to the contact surface. Side loads increase wearing and reduce life expectancy. |
| DEU | Es dürfen keine seitlichen Kräfte auf die Gasdruckfedern wirken, da sich sonst die Lebensdauer wesentlich verringert. |
| FRA | Les ressorts doivent toujours fonctionner complètement perpendiculaire à la surface de contact. Les charges latérales augmentent l'usure et réduisent la durée de vie. |
| ITA | Le molle a gas devono funzionare sempre completamente il perpendicolare alla superficie di contatto. I carichi laterali aumentano l'usura e ne riducono la durata. |
| ESP | Los cilindros de gas deben siempre trabajar de manera perpendicular a la superficie de contacto. Las cargas laterales aumentan el desgaste y reducen la vida útil. |
| POR | Os cilindros devem sempre trabalhar de forma perpendicular à superfície de contato. As forças laterais aumentam o desgaste e reduzem a vida útil do cilindro. |

AZOL GAS

# OPERATING INSTRUCTIONS

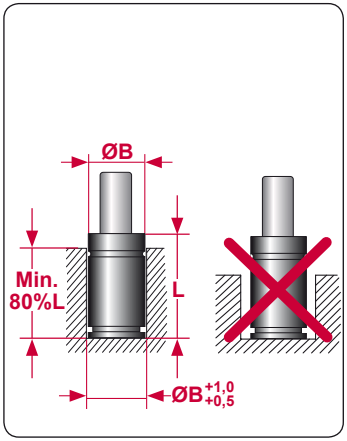


| | |
|---|---|
| ENG | When the gas springs are installed into a bored pocket, the bored pocket diameter should not exceed 1mm larger than the gas spring body diameter. And the bore pocket depth must be minimum 80% of L. |
| DEU | Werden Gasdruckfedern in Vertiefung eingebaut, so sollte der Bohrungsdurchmesser nur 1 mm größer als der Federdurchmesser sein. Die Vertiefung sollte mindestens 80% von L betragen. |
| FRA | Quand les ressorts sont installés dans une poche, le diamètre de poche ne devrait pas dépasser 1 mm de plus que le diamètre de corps du ressort. Et la profondeur de la poche doit être au minimum de 80% de L. |
| ITA | Quando le molle a gas sono installate in una sede alesata, il diametro alesato della stessa non deve essere superiore di 1mm, rispetto al diametro del corpo della molla a gas. E la profondità della sede alesata deve essere di almeno 80% di L. |
| ESP | Cuando los cilindros de gas se instalan en una cajera, el diámetro de la cajera no debería exceder 1mm de la dimension del cuerpo del cilindro de gas. Y la profundidad de la cajera debe ser como mínimo el 80% de L. |
| POR | Quando o cilindro for instalado dentro de um alojamento, o diâmetro do mesmo não pode exceder 1mm do diâmetro do corpo do cilindro. E a profundidade do alojamento deve ser no mínimo 80% de L. |

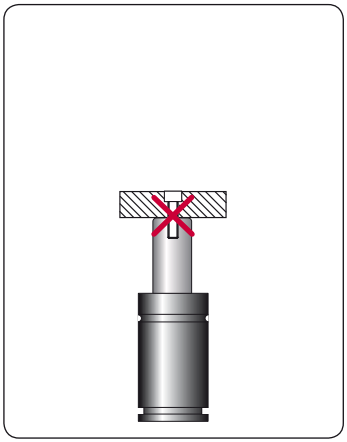

| | |
|---|---|
| ENG | Do not use the piston rod threaded hole for fixing the gas spring into the tool. This hole is only to be used for maintenance operations. |
| DEU | Das Gewinde in der Kolbenstange dient nur zu Wartungsarbeiten und darf nicht zur Befestigung der Gasdruckfeder benutz werden. |
| FRA | N'employez pas le trou fileté de tige de piston pour la fixation du ressort dans l'outil. Ce trou doit être employé seulement pour des opérations d'entretien. |
| ITA | Non usare il filetto dello stelo per la riparazione durante il lavoro. Il filetto deve essere usato solamente per gli interventi di manutenzione. |
| ESP | No usar el agujero roscado del vástago para la fijación del cilindro al útil. Este agujero sólo debe emplearse para operaciones de mantenimiento. |
| POR | Não use o furo rosqueado da haste para fixar o cilindro. Ele só deve ser utilizado em serviços de manutenção. |

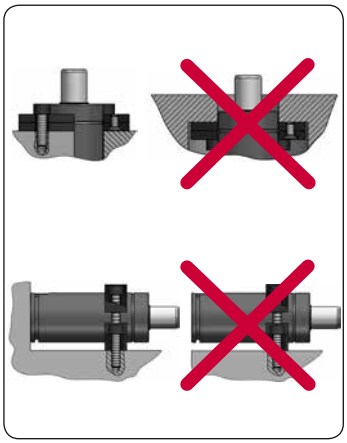

| | |
|---|---|
| ENG | Fix the gas spring into the tool through the appropriate mount. |
| DEU | Die Fixierung der Gasdruckfeder sollte mit der vorgesehenen Befestigung erfolgen. |
| FRA | Fixez le ressort à gaz dans l'outil par la bride appropriée. |
| ITA | Fissare i cilindri ad azoto solamente con gli specifici elementi di fissagio. |
| ESP | Fijar el cilindro de gas al útil mediante las bridas adecuadas. |
| POR | Fixe o cilindro na ferramenta com a flange adequada. |

# OPERATING INSTRUCTIONS

AZOL GAS

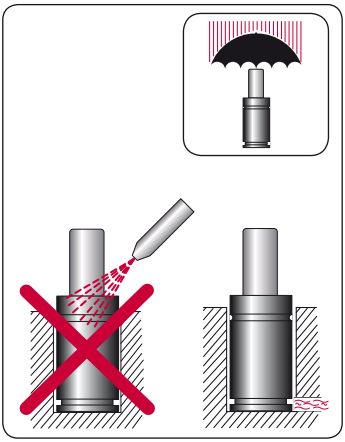

| | |
|---|---|
| ENG | Protect the gas springs from solid or liquid contaminants. Provide adequate drainage in gas springs pockets. |
| DEU | Schützen Sie die Gasdruckfedern vor Kontakt mit festen oder flüssigen Verschmutzungen. Bei Einbau in Kavitäten müssen Drainage-Kanäle eingebracht werden. |
| FRA | Protégez les ressorts à gaz contre les contaminants solides ou liquides. Un drainage dans les poches des ressorts est recommandé. |
| ITA | Proteggere i cilindri ad azoto da ogni contaminazione solida o liquida. E' suggerito uno scarico sufficiente nel caso di sede alesata. |
| ESP | Proteger los cilindros de gas de contaminantes sólidos o líquidos. Proporcionar drenaje adecuado a las cajeras donde se instalan los cilindros. |
| POR | Proteja os cilindros de contaminadores sólidos ou líquidos Recomenda-se a drenagem dos alojamentos. |

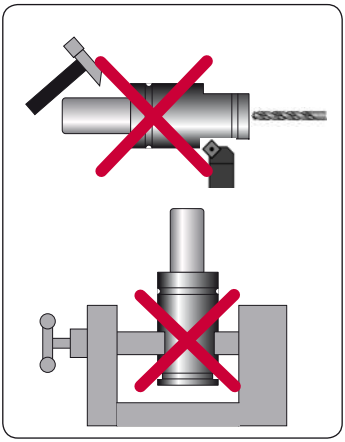

| | |
|---|---|
| ENG | Avoid whatever impatct and do not make any mechanical work on the gas spring body or piston rod. |
| DEU | Schützen Sie die Gasdruckfeder insgesamt ( besonders Körper und Kolbenstangen ) gegen mechanische Beschädigung. |
| FRA | Evitez quelqu'impact que ce soit et ne faites aucun travail mécanique sur la tige ou le corps du ressort à gaz. |
| ITA | Evitare ogni lavoro meccanico ed ogni danneggiamento al corpo e allo stello della molla a gas. |
| ESP | Evitar cualquier impacto o trabajo mecánico en el cuerpo o vástago del cilindro. |
| POR | Evite qualquer impacto ou trabalho mecânico tanto na haste como no corpo do cilindro. |

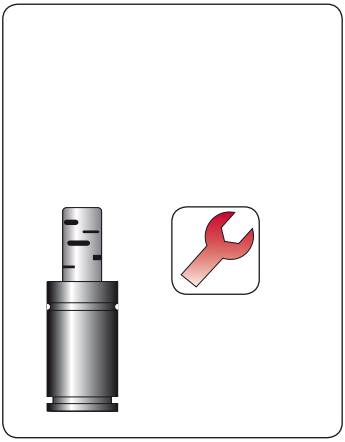

| | |
|---|---|
| ENG | Gas springs with scratches on the piston rod surface should be replaced. |
| DEU | Gasdruckfedern mit Kratzern auf der Kolbestange-Oberfläche sollten ersetzt werden. |
| FRA | Des ressorts à gaz avec des éraflures sur la surface de la tige devraient être remplacés. |
| ITA | Le molle a gas con graffi sulla superficie dello stelo devono essere sostituite. |
| ESP | Los cilindros de gas con marcas en la superficie del vástago deberían reemplazarse. |
| POR | O cilindro que apresentarem riscos na haste a mesma deverá ser substituída. |

AZOL GAS

# OPERATING INSTRUCTIONS



| | |
|---|---|
| ENG | Gas springs maintenance must be carried out only by skilled personnel, with the appropriate training, and always following the operating and service instructions from Azolgas. |
| DEU | Arbeiten an den Gasdruckfedern dürfen ausschließlich von geschulten Mitarbeitern durchgeführt werden. Die technischen Hinweisen, Vorgaben und Anweisungen von Azolgas müssen unbedingt und jederzeit befolgt werden. |
| FRA | L'entretien des ressorts à gaz doit être effectué uniquement par du personnel habilité, ayant les formations requises, et cela en respectant toujours les instructions de service d'Azolgas. |
| ITA | La manutenzione delle molle a gas deve essere effettuata solo da personale esperto, con preparazione specifica e sempre seguendo le istruzioni di servizio di Azolgas. |
| ESP | El mantenimiento de los resortes de gas debe ser efectuado por personal cualificado, con la debida formación, y siguiendo las instrucciones de utilización y mantenimiento de Azolgas. |
| POR | A manutenção dos cilindros deve ser realizada somente por pessoas qualificadas, com treinamento apropriado, e seguindo as instruções de funcionamento e manutenção da Azolgas. |

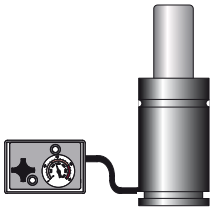

| | |
|---|---|
| ENG | Most of Azolgas gas springs could be used into linked systems. Linked systems allow users to easily monitor, control and adjust pressure. |
| DEU | Die meisten Azolgas Gasdruckfedern können durch Verschlauchung in einem Verbundsystem arbeiten. Das erleichtert das Steuern, Ablesen und das Anpassen des Druckes. |
| FRA | La plupart des ressorts à gaz Azolgas peuvent être utilisés dans les systèmes reliés. Cela permet facilement aux utilisateurs de surveiller, contrôler et ajuster la pression. |
| ITA | La maggior parte delle molle a gas della Azolgas possono essere utilizzate in sistemi collegati, che permettono agli utenti di verificare, controllare ed intervenire sulla pressione. |
| ESP | La mayoría de los cilindros de gas Azolgas pueden ser usados en sistemas conexionados, permitiendo al usuario la fácil monitorización, control y ajuste de presión. |
| POR | A maioria dos cilindros Azolgas pode ser utilizado em sistemas interligados, permitindo ao usuário fácil monitoramento e controla da pressão. |




| | |
|---|---|
| ENG | Designed and manufactured according PED 97/23/CE. The user of the gas springs is responsible for future inspections to be made to the springs in accordance with the regulations of the country where they will be used. Azolgas recommend to replace gas springs after 2 million strokes/10 years. |
| DEU | Gasdruckfedern sind entwickelt und hergestellt nach Drückgeräte-Richtlinie PED 97/23/CE. Der Benutzer hat dafür zu sorgen dass die nationale Richtlinien bezüglich Wartung und periodische Inspektionen unbedingt angehalten werden. Azolgas empfiehlt, die Gasdruckfedern nach 2 Millionen Hüben, spätestens nach 10 Jahren, zu ersetzen. |
| FRA | Conçu et fabriqué selon PED 97/23/CE. L'utilisateur des ressorts à gaz est responsable pour les inspections qui doivent être faits pour les ressorts à gaz conformément à la réglementation du pays où ils seront utilisés. Azolgas recommandent de remplacer des ressorts après 2 millions de cycles/10 années. |
| ITA | Progettato e prodotto secondo PED 97/23/CE. L'utente delle molle a gas è responsabile di future ispezioni da effettuare per le molle a gas, secondo le norme del paese in cui verranno utilizzati. Azolgas suggerisce di sostituire le molle a gas dopo 2 milioni di colpi/10 anni. |
| ESP | Diseñado y fabricado según PED 97/23/CE. El usuario del equipo a presión deberá responsabilizarse de las futuras inspecciones a efectuar a dicho equipo de acuerdo con la normativa específica del país en el que vaya a utilizarse. Azolgas recomienda reemplazar los cilindros de gas después de 2 millones de ciclos/10 años. |
| POR | Projetado e fabricado de acordo com a PED 97/23/CE. O usuário dos cilindros é responsável por inspeções futuras a serem feitas para os cilindros, de acordo com as normas do país onde eles serão utilizados. Azolgas recomenda a troca dos cilindros após 2 milhões de ciclos/10 anos. |

# HOW TO USE THE CATALOGUE

AZOL GAS

1 2

230 www.azolgas.com Global Customized Service azolgas@azolgas.com Tel. +34 945290010

## FD 1500 V2

Low Profile

RENAULT EM24.54.700

AZOL GAS

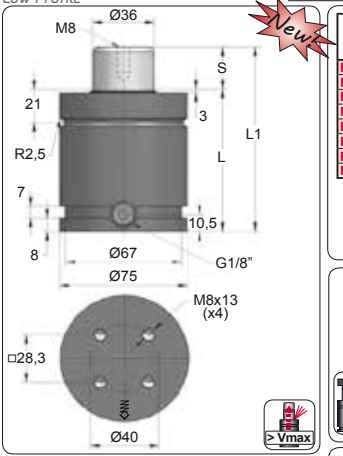


New

| ORDER | S (mm) | L1 ±0,25 (mm) | L (mm) | Kg. |
|---|---|---|---|---|
| FD 1500 025 V2 | 25 | 110 | 85 | 2.11 |
| FD 1500 032 V2 | 32 | 124 | 92 | 2.22 |
| FD 1500 038 V2 | 38 | 136 | 98 | 2.31 |
| FD 1500 050 V2 | 50 | 160 | 110 | 2.50 |
| FD 1500 063 V2 | 63.5 | 187 | 123.5 | 2.70 |
| FD 1500 080 V2 | 80 | 220 | 140 | 3.04 |
| FD 1500 100 V2 | 100 | 260 | 160 | 3.80 |
| FD 1500 125 V2 | 125 | 310 | 185 | 4.75 |

5

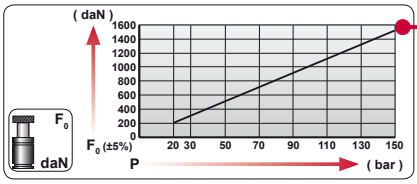


6

3

| CODE | bar | psi | F0 daN | F1 daN |
|---|---|---|---|---|
| FD 1500 050 V2 | 150 | 2145 | 1530 | 2140 |
| FD-H 1500 050 V2 | 0 | 0 | --- | --- |

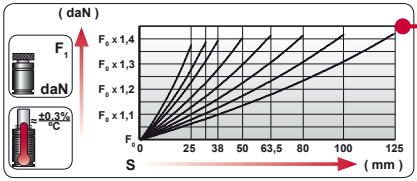


7

4

| | |
|---|---|
| ENG | ORDER |
| DEU | BESTELLUNG |
| FRA | COMMANDE |
| ITA | ORDINE |
| ESP | PEDIDO |
| POR | PEDIDO |

F0 daN | S mm

FD 1500 50

FD 1500 050 V2

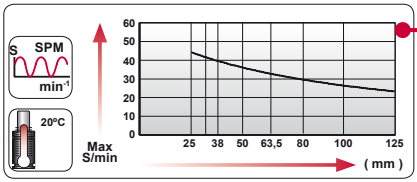


8

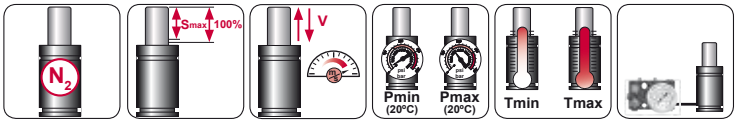


| N2 | Smax < 90% | Vmax 1,6 m/s | bar psi 20 290 | bar psi 150 2175 | °C °F 0 32 | °C °F 80 176 | 600 CP- |
|---|---|---|---|---|---|---|---|

9 10 11 12 13 14

AZOL GAS

# HOW TO USE THE CATALOGUE

## 1

| | |
|---|---|
| ENG | MODEL |
| DEU | MODELL |
| FRA | MODÈLE |
| ITA | MODELLO |
| ESP | MODELO |
| POR | MODELO |

## 2

| | |
|---|---|
| ENG | VERSION |
| DEU | VERSION |
| FRA | VERSION |
| ITA | VERSIONE |
| ESP | VERSIÓN |
| POR | VERSÃO |

## 3

| | |
|---|---|
| ENG | FILLING PRESSURE |
| DEU | FÜLLDRUCK |
| FRA | PRESSION DE REMPLISSAGE |
| ITA | PRESSIONE DI CARICAMENTO |
| ESP | PRESIÓN DE CARGA |
| POR | PRESSÃO DE CARGA |

## 4

| | |
|---|---|
| ENG | ORDER |
| DEU | BESTELLUNG |
| FRA | COMMANDE |
| ITA | ORDINE |
| ESP | PEDIDO |
| POR | PEDIDO |

## 5

| | |
|---|---|
| ENG | PED 97/23/CE - CE DIRECTIVE |
| DEU | PED 97/23/CE - RICHTLINIE EG |
| FRA | PED 97/23/CE - DIRECTIVE CE |
| ITA | PED 97/23/CE - DIRETTIVA CE |
| ESP | PED 97/23/CE - DIRECTIVA CE |
| POR | PED 97/23/CE - DIRECTIVA CE |

## 6

| | |
|---|---|
| ENG | INITIAL FORCE PER CHARGE PRESSURE |
| DEU | ANFANGSKRAFT ABHÄNGIG VOM DRUCK |
| FRA | FORCE INITIALE PAR PRESSION DE CHARGE |
| ITA | FORZA INIZIALE PER PRESSIONE DELLA CARICA |
| ESP | FUERZA INICIAL SEGÚN LA PRESIÓN DE CARGA |
| POR | FORÇA INICIAL CONFORME A PRESSÃO DE CARGA |

## 7

| | |
|---|---|
| ENG | PRESSURE RISE PER STROKE USED |
| DEU | HUBABHÄNGIGES DRUCKAUFBAUDIAGRAMM |
| FRA | AUGMENTATION DE PRESSION PAR COURSE UTILISÉE |
| ITA | AUMENTO DI PRESSIONE IN FUNZIONE DELLA CORSA |
| ESP | AUMENTO DE PRESIÓN EN FUNCIÓN DE LA CARRERA |
| POR | AUMENTO DA PRESSÃO EM FUNÇÃO DO CURSO |

## 8

| | |
|---|---|
| ENG | MAX. RECOMMENDED STROKES/MINUTE |
| DEU | MAX.ZULÄSSIGE HÜBE/MINUTE |
| FRA | MAX. CYCLES/MINUTE RECOMMANDÉ |
| ITA | CADENZA MAX. CORSA/MINUTO CONSIGLIATA |
| ESP | CADENCIA MAX. RECOMENDADA CARRERAS/MINUTO |
| POR | CADÊNCIA MÁX. RECOMENDADA CICLOS/MINUTO |

## 9

| | |
|---|---|
| ENG | PRESSURE MEDIUM |
| DEU | DRUCK-MEDIUM |
| FRA | GAZ DE CHARGEMENT |
| ITA | GAS DI CARICAMENTO |
| ESP | GAS DE CARGA |
| POR | GÁS DE CARGA |

## 10

| | |
|---|---|
| ENG | MAX. RECOMMENDED USE OF THE STROKE |
| DEU | MAX. EMPFHOLENE ARBEITSHUB |
| FRA | MAX. UTILISATION DE LA COURSE RECOMMANDÉ |
| ITA | USO SUGGERITO MASSIMO DELLA CORSA |
| ESP | MAX. UTILIZACION DE LA CARRERA RECOMENDADA |
| POR | UTILIZAÇÃO MÁXIMA DE CURSO RECOMENDADO |

## 11

| | |
|---|---|
| ENG | MAX. SPEED (METERS/SECOND) |
| DEU | MAX. KOLBENGESCHWINDIGKEIT (m/s) |
| FRA | MAX. VITESSE (MÈTRES/SECONDE) |
| ITA | VELOCITÀ MASSIMA (METRI/SECONDO) |
| ESP | VELOCIDAD MÁXIMA (METROS/SEGUNDO) |
| POR | VELOCIDADE MÁXIMA (METROS/SEGUNDO) |

## 12

| | |
|---|---|
| ENG | MIN-MAX. CHARGING PRESSURE |
| DEU | MIN-MAX. FÜLLDRUCK |
| FRA | MIN-MAX. PRESSION DE CHARGEMENT |
| ITA | MIN-MAX. PRESSIONE DI CARICAMENTO |
| ESP | MIN-MAX. PRESIÓN DE CARGA |
| POR | MIN-MAX. PRESSÃO DE CARGA |

## 13

| | |
|---|---|
| ENG | MIN-MAX. WORKING TEMPERATURE |
| DEU | MIN.-MAX. ARBEITSTEMPERATUR |
| FRA | MIN-MAX. TEMPÉRATURE DU TRAVAIL |
| ITA | MIN-MAX. TEMPERATURA DI FUNZIONAMENTO |
| ESP | MIN-MAX. TEMPERATURA DE TRABAJO |
| POR | MIN-MAX. TEMPERATURA DE TRABALHO |

## 14

| | |
|---|---|
| ENG | OPTION PIPING. RECOMMENDED CONTROL PANEL |
| DEU | OPTIONALE VERSCHLAUCHUNG. EMPFOHLENE KONTROLLARMATUR |
| FRA | OPTION RACCORDEMENT. PANNEAU RECOMMANDÉ |
| ITA | OPZIONE COLLEGAMENTO. PANNELLO SUGGERITO |
| ESP | OPCIÓN CONEXIONADO. PANEL RECOMENDADO |
| POR | OPÇÃO INTERLIGADO. PAINEL RECOMENDADO |

# HOW TO USE THE CATALOGUE

AZOL GAS

15



AZOL GAS

## FD 1500 V2 *MOUNTS*

*Low Profile*

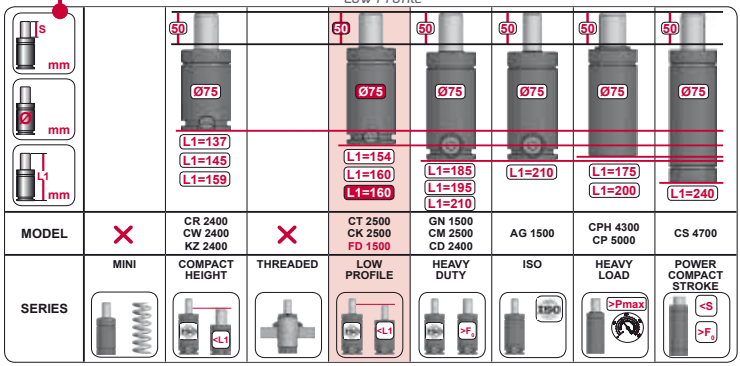


| | | | | | | | | |
|---|---|---|---|---|---|---|---|---|
| MODEL | ✕ | CR 2400 CW 2400 KZ 2400 | ✕ | CT 2500 CK 2500 FD 1500 | GN 1500 CM 2500 CD 2400 | AG 1500 | CPH 4300 CP 5000 | CS 4700 |
| SERIES | MINI | COMPACT HEIGHT | THREADED | LOW PROFILE | HEAVY DUTY | ISO | HEAVY LOAD | POWER COMPACT STROKE |

16

### A14-075

ISO E24.54.815.G EM24.54.700/F

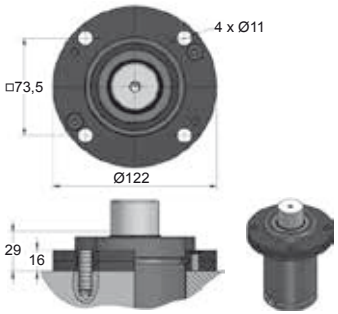


17

### A34-075

ISO

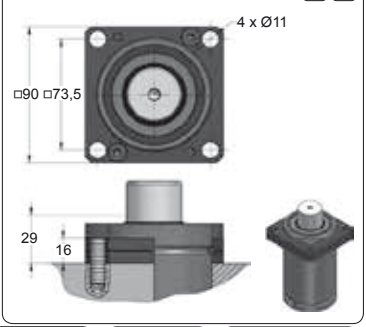





| CODE | | FD 1500 050 V2 | KIT XXXXXXX-S KIT XXXXXXX-C | A14-075 | 18 GA 5 |
|---|---|---|---|---|---|
| ENG | ORDER | GAS SPRING | REPAIR KIT | FLANGE | CHARGING ADAPTER |
| DEU | BESTELLUNG | GASDRUCKFEDER | ERSATZTEILSATZ | FLANSCHE | LADEADAPTER |
| FRA | COMMANDE | RESSORT À GAZ | KIT DE RÉPARATION | BRIDE | RACCORD DE CHARGE |
| ITA | ORDINE | CILINDRO AD AZOTO | KIT DI MANUTENZIONE | FLANGE | ADATTATORE DI CARICO |
| ESP | PEDIDO | RESORTE DE GAS | KIT DE REPARACION | BRIDA | ADAPTADOR DE CARGA |
| POR | PEDIDO | CILINDRO DE GÁS | KIT DE MANUTENÇÃO | FLANGE | ADAPTADOR DE CARGA |

18 19 20 21

AZOL GAS

# HOW TO USE THE CATALOGUE

## 15

| | |
|---|---|
| ENG | SERIES CHART |
| DEU | ÜBERSICHTSTABELLE |
| FRA | TABLEAU DE SÉRIES |
| ITA | TABELLA DI SERIE |
| ESP | COMPARATIVA DE SERIES |
| POR | COMPARATIVO DAS SÉRIES |

## 16

| | |
|---|---|
| ENG | MOUNTS |
| DEU | FLANSCHEN |
| FRA | BRIDES |
| ITA | FLANGE |
| ESP | BRIDAS |
| POR | FIXAÇAO |

## 17

| | |
|---|---|
| ENG | MOUNTS STANDARDS |
| DEU | FLANSCHEN NORMEN |
| FRA | NORMES DE BRIDES |
| ITA | STANDARS DELLE FLANGE |
| ESP | ESTÁNDARDS DE BRIDAS |
| POR | PADRÕES DE FLANGES |

## 18

| | |
|---|---|
| ENG | ORDER GAS SPRING |
| DEU | BESTELLUNG GASDRUCKFEDER |
| FRA | COMMANDE RESSORT À GAZ |
| ITA | ORDINE CILINDRO AD AZOTO |
| ESP | PEDIDO CILINDRO DE GAS |
| POR | PEDIDO DE CILINDRO DE NITROGÊNIO |

## 19

| | |
|---|---|
| ENG | ORDER REPAIR KIT |
| DEU | BESTELLUNG DICHTSATZ |
| FRA | COMMANDE KIT DE RÉPARATION |
| ITA | ORDINE KIT DI MANUTENZIONE |
| ESP | PEDIDO KIT DE REPARACIÓN |
| POR | PEDIDO DE KIT DE MANUTENÇÃO |

## 20

| | |
|---|---|
| ENG | ORDER MOUNT |
| DEU | BESTELLUNG FLANSCHEN |
| FRA | COMMANDE BRIDE |
| ITA | ORDINE FLANGE |
| ESP | PEDIDO BRIDA |
| POR | PEDIDO DE FLANGE |

## 21

| | |
|---|---|
| ENG | ORDER CHARGING ADAPTER |
| DEU | BESTELLUNG LADEADAPTER |
| FRA | COMMANDE RACCORD DE CHARGE |
| ITA | ORDINE ADATTATORE DI CARICO |
| ESP | PEDIDO ADAPTADOR DE CARGA |
| POR | PEDIDO DE ADAPTADOR DE CARGA |

# HOW TO USE THE CATALOGUE

AZOL GAS

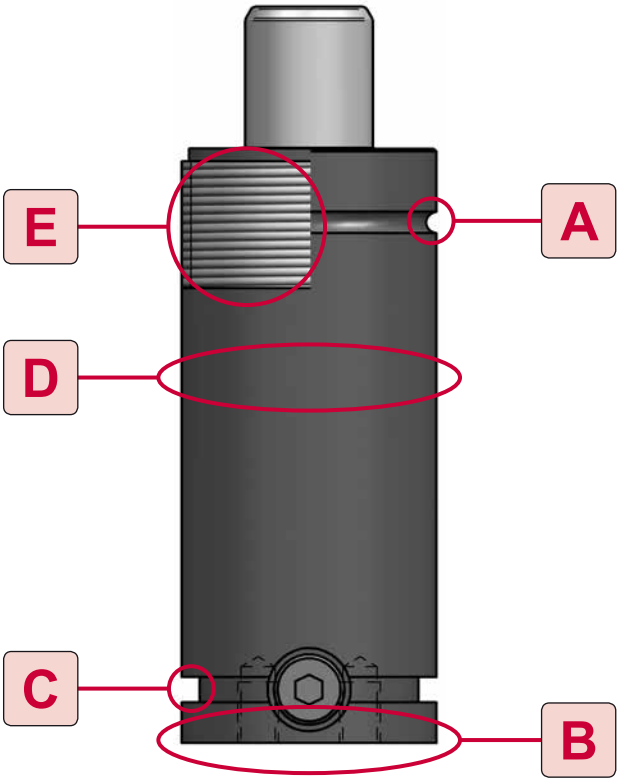


| | |
|---|---|
| ENG | ORDER |
| DEU | BESTELL |
| FRA | COMMANDE |
| ITA | ORDINE |
| ESP | PEDIDO |
| POR | PEDIDO |

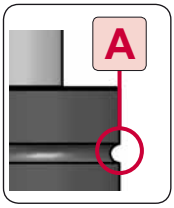


A
TYPE



14
MODEL




50
Ø

A 14 050

AZOL GAS

# HOW TO USE THE CATALOGUE

## A

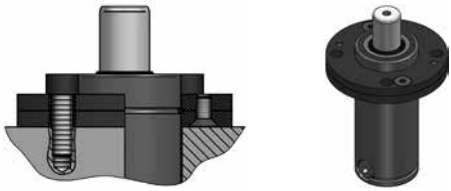

| | |
|---|---|
| ENG | UPPER ROUND GROOVE FLANGE |
| DEU | BUNDFLANSCH |
| FRA | COLLERETTE POUR GORGE RONDE SUPÉRIEURE |
| ITA | FLANGIA PER SCANALATURA ROTONDA SUPERIORE |
| ESP | BRIDA PARA CAJERA SUPERIOR REDONDA |
| POR | FLANGE PARA O SULCO REDONDO SUPERIOR |

## B

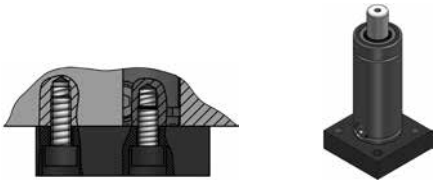

| | |
|---|---|
| ENG | BOTTOM MOUNT PLATE |
| DEU | UNTERE BEFESTIGUNGS-PLATTE |
| FRA | PLAQUE FIXATION INFÉRIEURE |
| ITA | BASE INFERIORE DI FISSAGGIO |
| ESP | BASE INFERIOR DE FIJACIÓN |
| POR | PLACA INFERIOR DA MONTAGEM |

## C

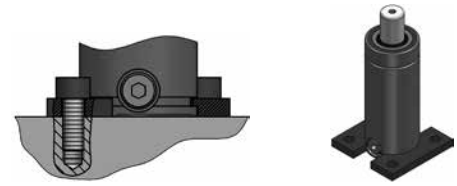

| | |
|---|---|
| ENG | LOWER SQUARE GROOVE FLANGE |
| DEU | FUSSFLANSCH |
| FRA | FLASQUE-BRIDE POUR GORGE CARRÉE INFÉRIEURE |
| ITA | SEMI-FLANGIA PER SCANALATURA QUADRATA INFERIORE |
| ESP | BRIDA PARA CAJERA INFERIOR CUADRADA |
| POR | FLANGE PARA O SULCO QUADRADO INFERIOR |

## D

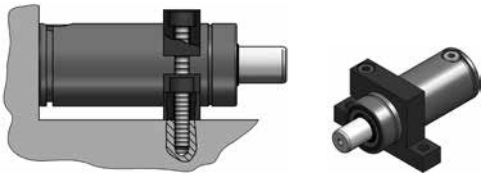

| | |
|---|---|
| ENG | SUPPORT MOUNT |
| DEU | KLEMMFLANSCH |
| FRA | SUPPORT AVANT |
| ITA | SUPPORTI ANTERIORI |
| ESP | BRIDA DE APOYO |
| POR | FLANGE DE SUSTENTAÇÃO |

## E

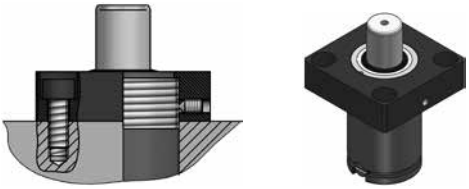

| | |
|---|---|
| ENG | THREADED BODY FLANGE |
| DEU | KÖRPER GEWINDE FLANSCHE |
| FRA | BRIDE VISSÉE SUR LE CORPS FILETÉ |
| ITA | FLANGIA FILETTATA PER IL CORPO |
| ESP | BRIDA ROSCADA SOBRE EL CUERPO |
| POR | FLANGE ROSQUEADA DO CORPO |

# INSTALLATION EXAMPLES

AZOL GAS

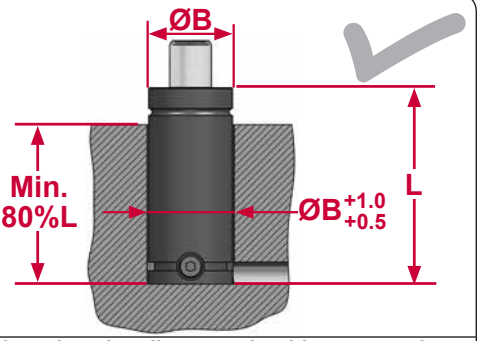


The bored pocket diameter should not exceed 1mm larger than the gas spring body diameter.
The bore pocket depth must be minimum 80% of L.
Provide adequate drainage in gas springs pockets when required.

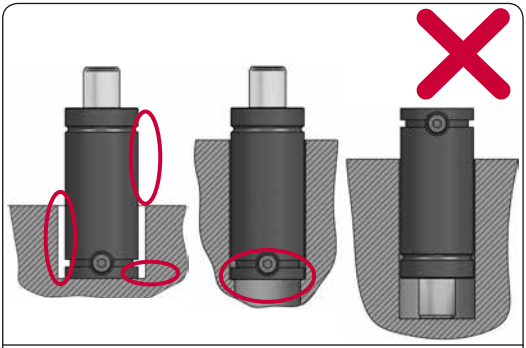

Incorrect pockets (i.e. larger diameter or shorter length) may cause structural damage or reduced life of gas springs.

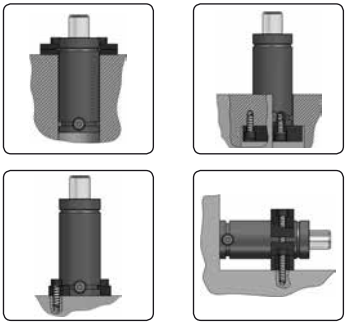

Fix the gas spring into the tool through the appropriate mount in the right way.

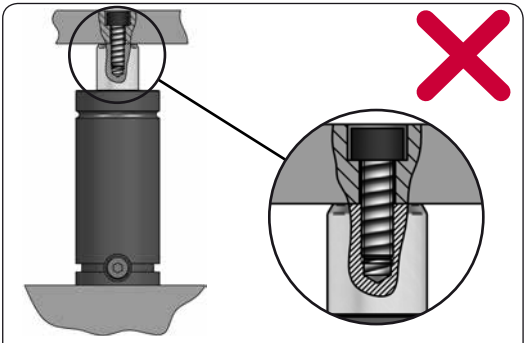

Do not use the piston rod threaded hole for fixing the gas spring into the tool.
The top rod threaded hole is only to be used when servicing the gas springs.

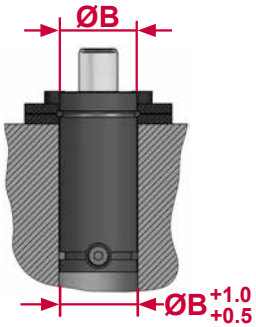


<u>Example mount type A</u>
When using mount type A into a bored pocket, the bored pocket diameter should not exceed 1mm larger than the gas spring body diameter.

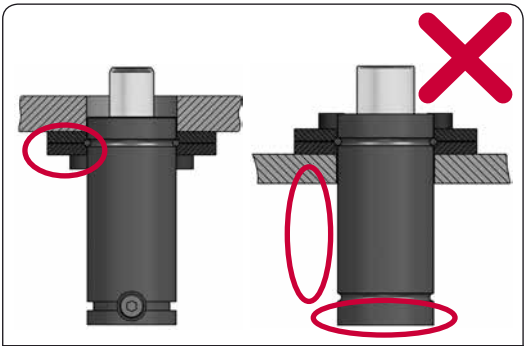

<u>Example mount type A</u>
In Compact Power Stroke series (CS) the bottom should be supported at all the times. A flat surface against the base is always required.

AZOL GAS

# INSTALLATION EXAMPLES

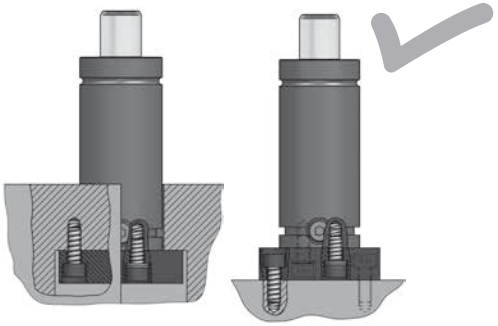

**Example mount type B**
Fix the gas spring into the tool through the appropriate mount in the right way.

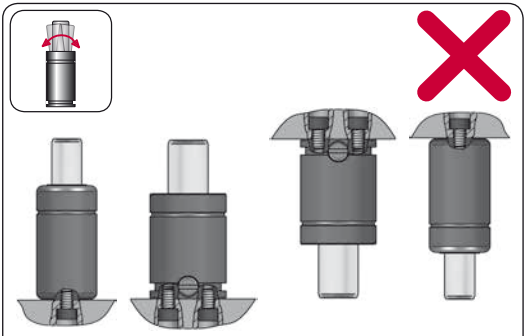

In MINI and Compact Height series (CW) avoid side loads by using the appropriate mounts.
Do not fix the MINI and Compact Height series (CW) to the tool only by using screws at the bottom.

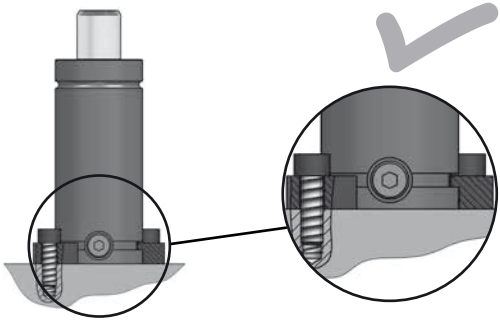

**Example mount type C**
Fix the gas spring into the tool through the appropriate mount in the right way.

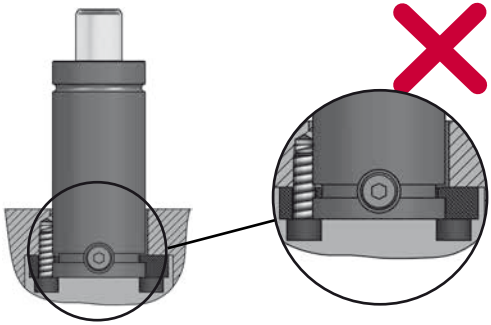

**Example mount type C**
The bottom should be supported at all the times. A flat surface against the base is always required.

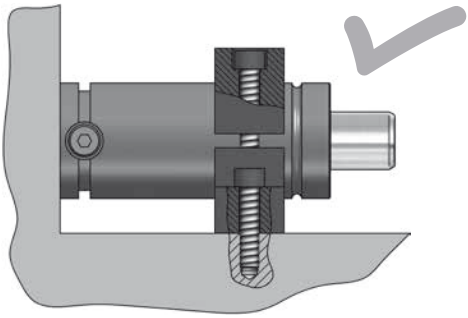

**Example mount type D**
Fix the gas spring into the tool through the appropriate mount in the right way.

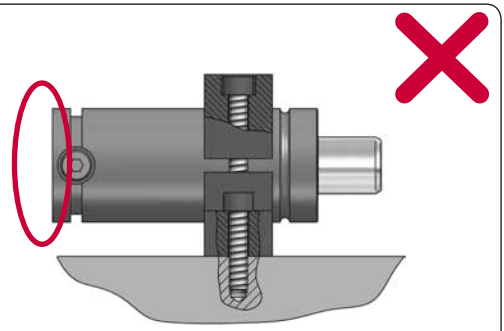

**Example mount type D**
The bottom should be supported at all the times. A flat surface against the base is always required.

# COLOR CODE: MINI GAS SPRINGS

AZOL GAS

| AFB V2 | COLOR | bar | psi | $F_0$ daN | $F_1$ daN |
|---|---|---|---|---|---|
| AFB 13 050 V2 | Green | 45 | 650 | 13 | 20 |
| AFB 25 050 V2 | Blue | 90 | 1305 | 25 | 40 |
| AFB 38 050 V2 | Red | 135 | 1960 | 38 | 60 |
| AFB 50 050 V2 | Yellow | 180 | 2610 | 50 | 80 |
| AFB XX 050 V2 | Black | 20-180 | 290-2610 | 6 - 50 | 9 - 80 |

| AFH V1 | COLOR | bar | psi | $F_0$ daN | $F_1$ daN |
|---|---|---|---|---|---|
| AFH 18 050 V1 | Green | 35 | 510 | 18 | 35 |
| AFH 35 050 V1 | Blue | 70 | 1015 | 35 | 70 |
| AFH 50 050 V1 | Red | 100 | 1450 | 50 | 100 |
| AFH 70 050 V1 | Yellow | 140 | 2030 | 70 | 140 |
| AFH XX 050 V1 | Black | 20-180 | 290-2610 | 10 - 90 | 20 - 180 |

| AFJ V1 | COLOR | bar | psi | $F_0$ daN | $F_1$ daN |
|---|---|---|---|---|---|
| AFJ 30 050 V1 | Green | 60 | 870 | 30 | 40 |
| AFJ 50 050 V1 | Blue | 100 | 1450 | 50 | 70 |
| AFJ 70 050 V1 | Red | 140 | 2030 | 70 | 95 |
| AFJ 90 050 V1 | Yellow | 180 | 2610 | 90 | 120 |
| AFJ XX 050 V1 | Black | 20-180 | 290-2610 | 10 - 90 | 13 - 120 |

| AFK V1 | COLOR | bar | psi | $F_0$ daN | $F_1$ daN |
|---|---|---|---|---|---|
| AFK 25 050 V1 | Green | 40 | 580 | 25 | 35 |
| AFK 50 050 V1 | Blue | 80 | 1160 | 50 | 70 |
| AFK 75 050 V1 | Red | 120 | 1740 | 75 | 105 |
| AFK 100 050 V1 | Yellow | 160 | 2320 | 100 | 140 |
| AFK XXX 050 V1 | Black | 20-160 | 290-2320 | 13 - 100 | 18 - 140 |

| AFD V1 | COLOR | bar | psi | $F_0$ daN | $F_1$ daN |
|---|---|---|---|---|---|
| AFD 50 050 V1 | Green | 45 | 650 | 50 | 70 |
| AFD 100 050 V1 | Blue | 90 | 1305 | 100 | 140 |
| AFD 150 050 V1 | Red | 135 | 1960 | 150 | 210 |
| AFD 200 050 V1 | Yellow | 180 | 2610 | 200 | 280 |
| AFD XXX 050 V1 | Black | 20-180 | 290-2610 | 23 - 200 | 32 - 280 |

| AFC | COLOR | bar | psi | $F_0$ daN | $F_1$ daN |
|---|---|---|---|---|---|
| AFC 50 050 | Green | 45 | 650 | 50 | 75 |
| AFC 100 050 | Blue | 90 | 1305 | 100 | 155 |
| AFC 150 050 | Red | 135 | 1960 | 150 | 230 |
| AFC 200 050 | Yellow | 180 | 2610 | 200 | 305 |
| AFC XXX 050 | Black | 20-180 | 290-2610 | 23 - 200 | 35 - 305 |

| AFNA | COLOR | bar | psi | $F_0$ daN | $F_1$ daN |
|---|---|---|---|---|---|
| AFNA 50 050 | Green | 45 | 650 | 50 | 75 |
| AFNA 100 050 | Blue | 90 | 1305 | 100 | 155 |
| AFNA 150 050 | Red | 135 | 1960 | 150 | 230 |
| AFNA 200 050 | Yellow | 180 | 2610 | 200 | 305 |
| AFNA XXX 050 | Black | 20-180 | 290-2610 | 23 - 200 | 35 - 305 |

| AF V1 | COLOR | bar | psi | $F_0$ daN | $F_1$ daN |
|---|---|---|---|---|---|
| AF 50 050 V1 | Green | 45 | 650 | 50 | 70 |
| AF 100 050 V1 | Blue | 90 | 1305 | 100 | 135 |
| AF 150 050 V1 | Red | 135 | 1960 | 150 | 205 |
| AF 200 050 V1 | Yellow | 180 | 2610 | 200 | 270 |
| AF XXX 050 V1 | Black | 20-180 | 290-2610 | 23 - 200 | 30 - 270 |

| AFT V1 | COLOR | bar | psi | $F_0$ daN | $F_1$ daN |
|---|---|---|---|---|---|
| AFT 80 050 V1 | Green | 40 | 580 | 80 | 135 |
| AFT 160 050 V1 | Blue | 80 | 1160 | 160 | 265 |
| AFT 240 050 V1 | Red | 120 | 1740 | 240 | 400 |
| AFT 310 050 V1 | Yellow | 155 | 2450 | 310 | 515 |
| AFT XXX 050 V1 | Black | 20-180 | 290-2610 | 40 - 360 | 65 - 600 |

- Adaptable version that can be charged between Pmin and Pmax.
- Anpassbare Version, die mit einem verschiedenen Druck von Pmin bis Pmax befüllt werden kann.
- Version adaptable pouvant être chargée entre Pmin et Pmax.
- Versione adattabile che può essere caricata tra Pmin e Pmax.
- Versión adaptable que puede ser cargada entre Pmin y Pmax.
- Versão personalizável que pode ser carregada entre Pmin e Pmax.

AZOL GAS

# COLOR CODE: MINI GAS SPRINGS

## ORDER EXAMPLE

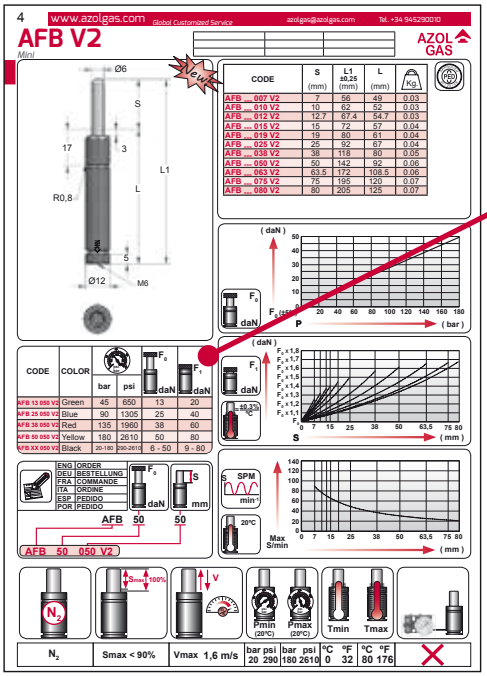


| AFB V2 | COLOR | bar | psi | $F_0$ daN | $F_1$ daN |
|---|---|---|---|---|---|
| AFB 13 050 V2 | Green | 45 | 650 | 13 | 20 |
| AFB 25 050 V2 | Blue | 90 | 1305 | 25 | 40 |
| AFB 38 050 V2 | Red | 135 | 1960 | 38 | 60 |
| AFB 50 050 V2 | Yellow | 180 | 2610 | 50 | 80 |
| AFB XX 050 V2 | Black | 20-180 | 290-2610 | 6 - 50 | 9 - 80 |

| | |
|---|---|
| ENG | ORDER |
| DEU | BESTELLUNG |
| FRA | COMMANDE |
| ITA | ORDINE |
| ESP | PEDIDO |
| POR | PEDIDO |

$F_0$ daN — S mm

AFB 50 50

AFB 50 050 V2 (YELLOW)

AFB 6 - 50 50

AFB XX 050 V2 (BLACK)

**BLACK:** Force to be specified by the customer. Delivered pre-charged at 20 bar.

## BODY MARK

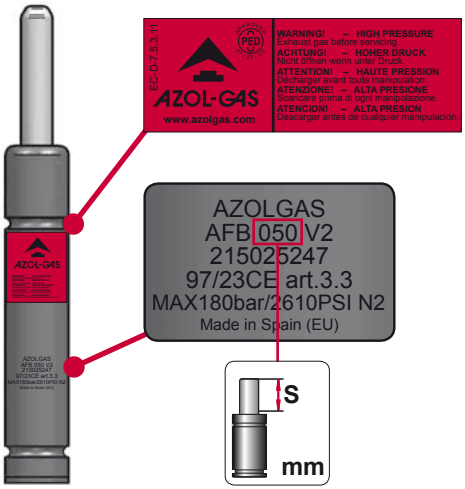


| AFB V2 | COLOR | bar | psi | $F_0$ daN | $F_1$ daN |
|---|---|---|---|---|---|
| AFB 13 050 V2 | Green | 45 | 650 | 13 | 20 |
| AFB 25 050 V2 | Blue | 90 | 1305 | 25 | 40 |
| AFB 38 050 V2 | Red | 135 | 1960 | 38 | 60 |
| AFB 50 050 V2 | Yellow | 180 | 2610 | 50 | 80 |
| AFB XX 050 V2 | Black | 20-180 | 290-2610 | 6 - 50 | 9 - 80 |

| | |
|---|---|
| ENG | ORDER |
| DEU | BESTELLUNG |
| FRA | COMMANDE |
| ITA | ORDINE |
| ESP | PEDIDO |
| POR | PEDIDO |

$F_0$ daN — S mm

AFB 38 50

AFB 38 050 V2

MINI gas springs series the force is defined by colored label.

MINI gas springs series only the model and stroke are engraved on the body (not the force).

# FROM SELF-CONTAINED TO HOSED

AZOL GAS

**1**

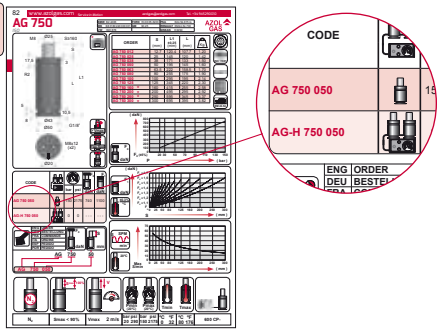


Gas springs may be ordered as a self-contained use or as a linked use.
Check in the corresponding catalogue sheet how to order (just by adding -H to the gas spring model).

**2**

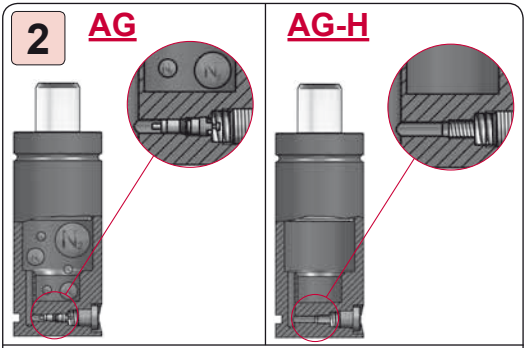


Gas springs for a self-contained use are supplied with filling valve and fully load with $N_2$ gas.
Gas springs for a linked use are supplied without filling valve and discharged (without $N_2$ gas).

**3**

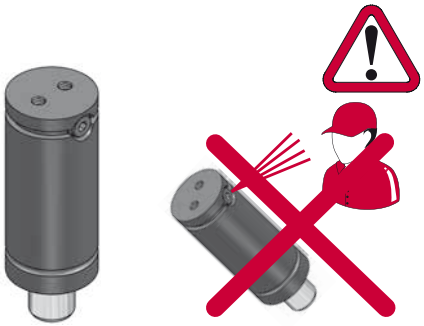

In order to unload the gas spring, set it rod down.
When discharging a gas spring point the gas flow away from operator or anybody else.

**4**

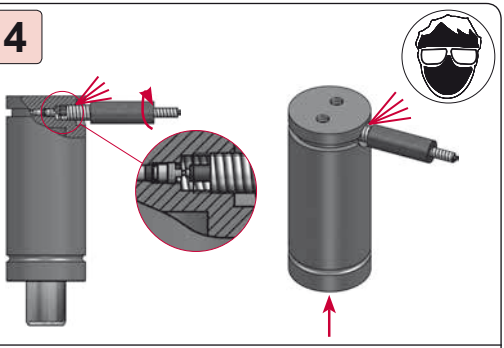

Thread the draining tool to the filling port thread and turn it slowly in order to get it fully drained.
Check the cylinder is completely unloaded, it should be possible to insert the rod by hand and stay in this position.

**5**

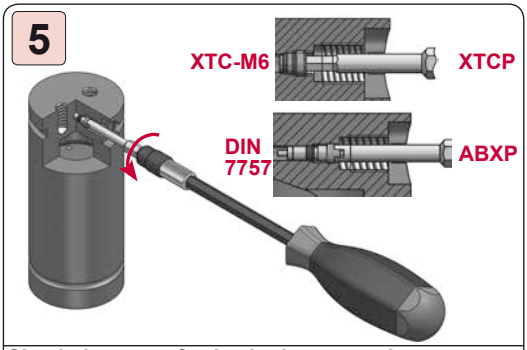


Check the type of valve in the gas spring.
Use the corresponding key adapter to unscrew the valve:
- ABXP
- XTCP

**6**

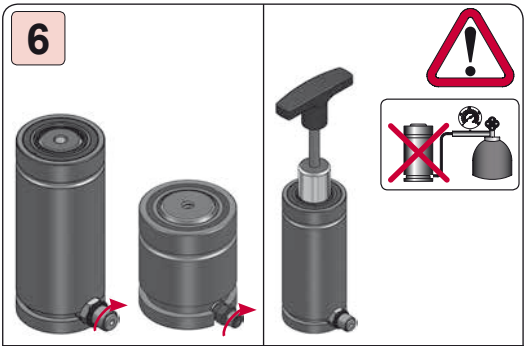

**Fit the corresponding adapter (M6 or G1/8").**
Extend fully the piston rod with the corresponding LM tool, never with gas.
Gas spring is now ready to be linked.

AZOL GAS

# HOSED SYSTEMS

## SELF-CONTAINED OR HOSED GAS SPRINGS

| CODE | | bar | psi | $F_0$ daN | $F_1$ daN |
|---|---|---|---|---|---|
| AG 750 050 | | 150 | 2175 | 740 | 1100 |
| AG-H 750 050 | | 0 | 0 | - - - | - - - |

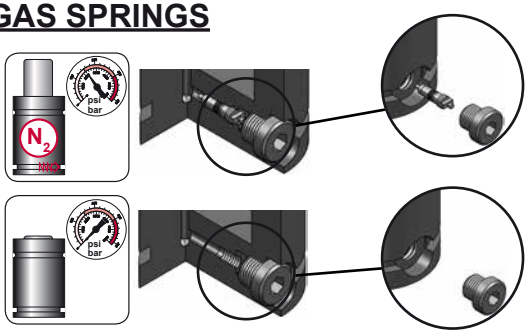

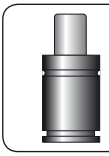

| | | |
|---|---|---|
| ENG | Self-contained gas spring | Gas spring delivered charged (with filling valve) |
| DEU | Autonome Gasdruckfeder | Gasdruckfeder befüllt (mit Ventil) |
| FRA | Ressort à gaz autonome | Ressort à gaz fourni chargé (avec valve de charge) |
| ITA | Cilindro ad azoto autonomo | Cilindro fornito carico (con valvola di carico) |
| ESP | Cilindro de gas autónomo | Cilindro de gas suministrado cargado (con válvula de carga) |
| POR | Cilindro de gas autônomo | Cilindro de gás fornecido carregado (com válvula de carga) |

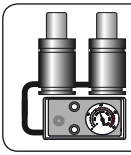

| | | |
|---|---|---|
| ENG | Ready to be hosed | Gas spring delivered unfilled (without filling valve) |
| DEU | Fertig zum Verschlauchen | Gasdruckfeder drucklos und ohne Ventil |
| FRA | Prêt à être relié | Ressort à gaz fourni non chargé (sans valve de charge) |
| ITA | Pronto per essere collegato | Cilindro fornito scarico (senza valvola di carico) |
| ESP | Preparado para conexionar | Cilindro de gas suministrado descargado (sin válvula de carga) |
| POR | Pronto a ser interligado | Cilindro de gás fornecido descarregado (sem válvula de carga) |

## ONLY PERMANENT HOSED GAS SPRINGS

| CODE | | bar | psi | $F_0$ daN | $F_1$ daN |
|---|---|---|---|---|---|
| - - - - - - - - - | | - - - | - - - | - - - | - - - |
| APFC-H 150 050 | | 0 | 0 | - - - | - - - |

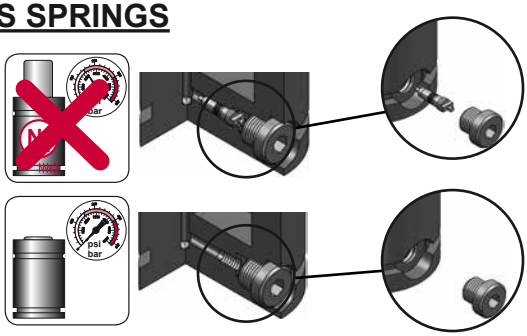

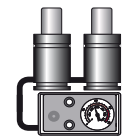

| | | |
|---|---|---|
| ENG | Hosed gas spring | Gas spring delivered unfilled and it can only be used in a permanent connection (valveless) |
| DEU | Gasdruckfeder zum verschlauchen | Gasdruckfeder wird drucklos angeliefert und kann nur im Verbund eingesetzt werden (ohne Ventil) |
| FRA | Ressort à gaz relié | Ressort à gaz fourni non chargé et il ne peut être utilisé que relié dans une connexion permanente (sans valve de charge) |
| ITA | Cilindro collegabile | Cilindro fornito scarico e può essere utilizzato solo in una connessione permanente (senza valvola unidirezionale) |
| ESP | Cilindro conexionable | Cilindro de gas suministrado descargado y sólo puede ser usado en un sistema conexionado permanente (sin válvula de carga) |
| POR | Cilindro de gas interligado | Cilindro de gás fornecido descarregado, apenas pode ser utilizado em um sistema interligado permanente (sem válvula de carga) |

# TEMPERATURE

AZOL GAS

## CHALLENGE



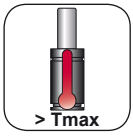








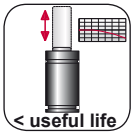


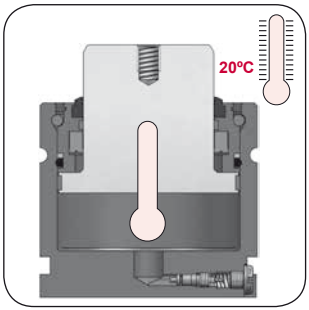


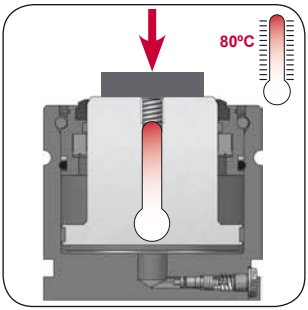


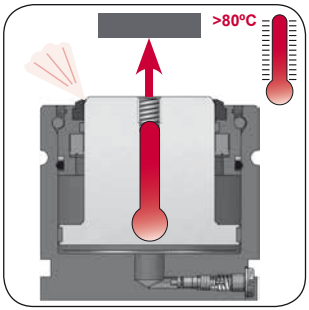


According to the technical specifications, the maximum operating temperature (**Tmax**) of gas springs is **80 ° C**.

The temperature increase above the maximum allowable (Tmax) causes deterioration of the sealing elements and **reduces the life** of the gas springs.

## FACTORS

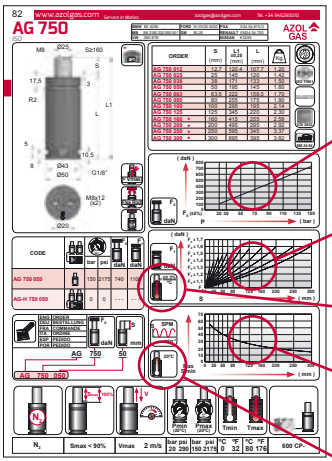








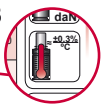





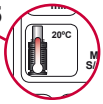


1.Initial pressure: the higher initial charging pressure, the higher temperature into the gas spring during operation.

2.Gas volume: the higher is volume inside the gas spring, the lower is the compression rate and temperature.

3.Pressure/temperature raise factor: due to friction, gas springs are heated when operating and the gas pressure increases with raising temperature (about 0.33% for every 1ºC).

4.Frequency and stroke used: the major stroke used, higher friction and greater temperature increase in the gas spring, so that the maximum rate in cycles per minute SPM is smaller.

5.Working environment temperature: estimated maximum SPM is based on a working environment temperature of 20ºC. The higher working environment temperature, the lower maximum SPM achieved.

Main factors increasing gas springs temperature:

- $P_0$ Initial pressure (bar)
- S Working stroke (mm)
- SPM Frequency (cycles per minute)

AZOL GAS

# TEMPERATURE

## SOLUTIONS

The new generation of AZOLGAS gas springs are equipped with technology ready to achieve a better performance even in the new application challenges.

## GAS VOLUME

The AZOLGAS gas springs are designed to contain higher gas volume and lower compression ratio, which means a substantial reduction of the working temperature.

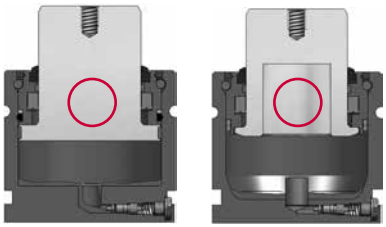

## FRICTION

The AZOLGAS gas springs incorporates floating rod that prevent friction of the piston red guiding against the body and allow a free flow of gas into the cylinder.

Additionally, the systems FR (Flex Rod) included in most of AZOLGAS gas springs, minimizes friction caused by side loading or deviations from perpendicularity.

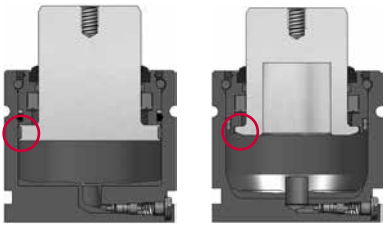

## SEALING ELEMENTS

The sealing elements of the AZOLGAS gas springs incorporate low friction designs and materials.

In parallel, the new sealing elements can withstand higher dynamic working temperatures.

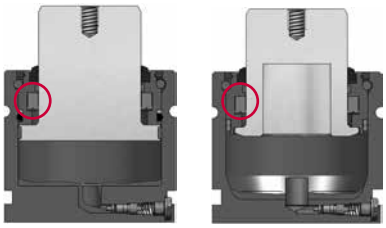

## LUBRICATION

The self-lubricating guiding components prevent metal to metal contact, achieving a significant reduction of friction / temperature.

The AZOLGAS gas springs are equipped with special synthetic lubrication that reduces wear of the components.

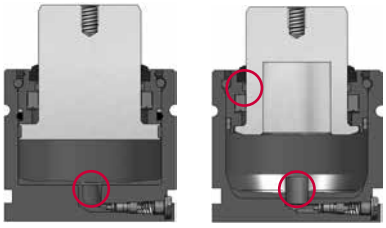

# FR (FLEX ROD)

AZOL GAS

## CHALLENGE



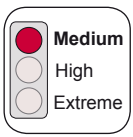





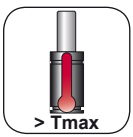








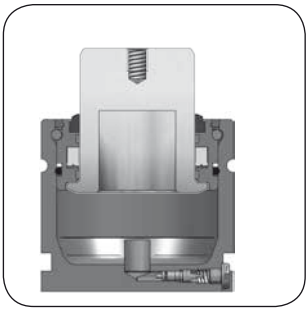

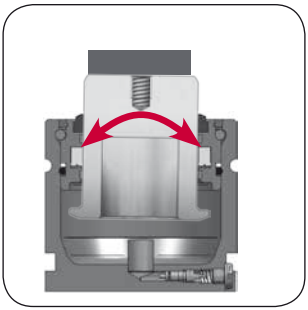

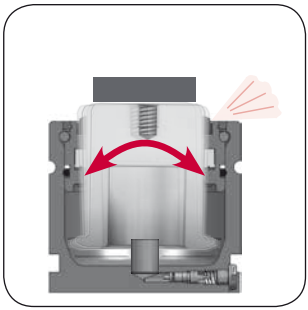

Certain application conditions involve the existence of sideloads or **deviations from perpendicularity**.

Depending on the intensity of sideload or perpendicularity deviation, a rigid guiding of a gas spring is not sufficient to achieve optimal performance at the above conditions.

Sideloads or deviations from perpendicularity cause a higher friction on the sealing elements of the gas spring, what increases the pressure and the temperature and r**educe its useful life**.

## SOLUTION



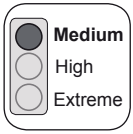





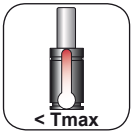








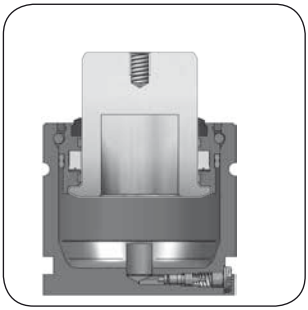

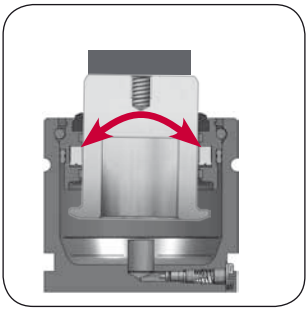

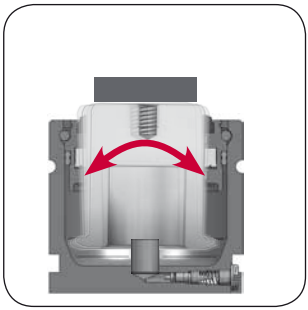

AZOLGAS designed a flex rod system **FR** that swings over the cartridge, suceeding to minimize the impact of sideloads or deviations from perpendicularity and **extending the useful life** of the gas springs.

The **FR sytem improves** the guiding of gas springs, and is particularly suitable for medium duty incidents (deviations from perpendicularity up to 1º).

**FR** solution is incorporated in most of AZOLGAS gas springs, **saves costs**, increases productivity, and let use in existing applications without modification of any dimension.

AZOL GAS

# FR (FLEX ROD)

## ADVANTAGES

- Fitted as **standard**.
- **Saves** costs.
- Increases **productivity**.
- Use in **existing applications**.
- **Extra** guiding. Medium incident.

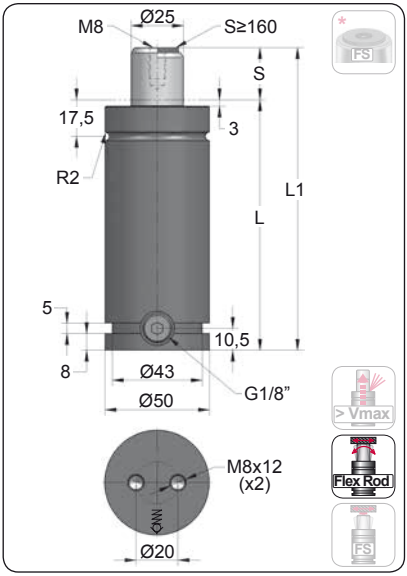


## FLEX ROD

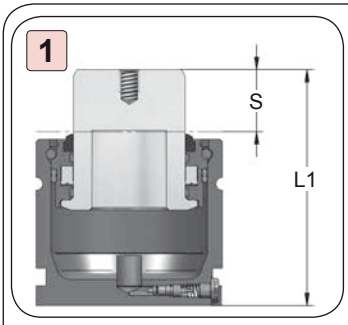


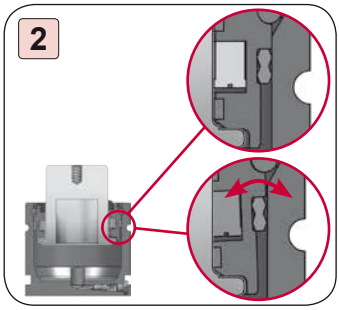


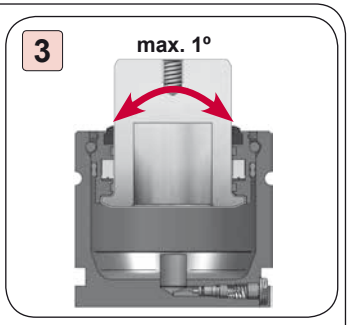


1. The FR system does not involve a variation of the dimensions of the gas spring.
2. FR (Flex Rod) design enables a flexible joint between the cartridge and the piston rod of the gas spring.
3. Allows deviation from perpendicularity up to 1º.

## HOW TO ORDER

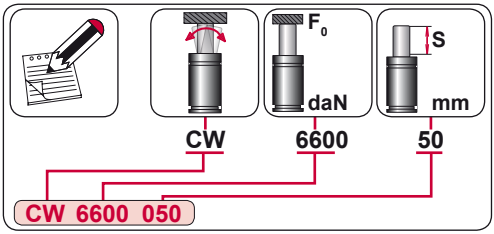

# FS (FLEX SIDELOAD)

AZOL GAS

## CHALLENGE









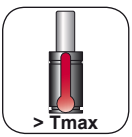








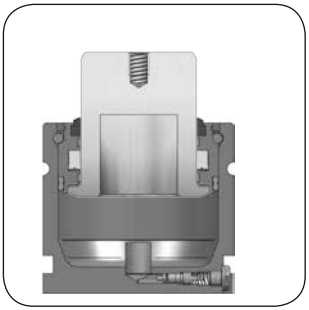

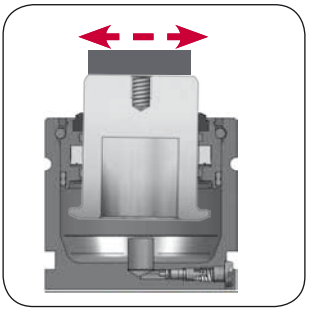

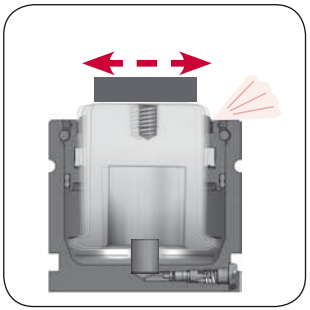

Certain application conditions involve the existence of **sideloads**.

Depending on the intensity of the sideload, a rigid guiding of a gas spring is not sufficient to achieve optimal performance at the above conditions.

Sideloads cause a higher friction on the sealing elements of the gas spring, what increases the pressure and the temperature and **reduce its useful life**.

## SOLUTION









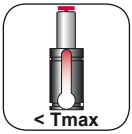








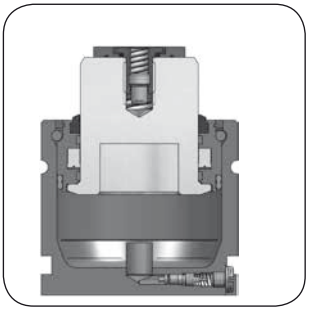

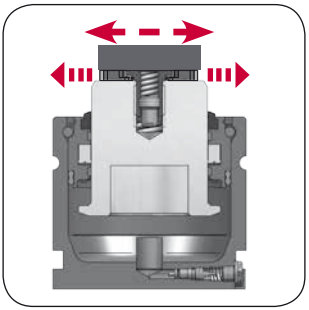

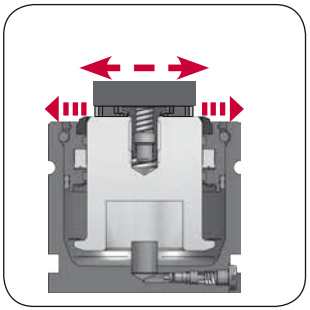

AZOLGAS designed a flex sideload system **FS** that acts on the piston rod, suceeding to minimize the impact of sideloads and **extending the useful life** of the gas springs.

The **FS** sytem **improves** the **guiding** of gas springs, and is particularly suitable for high duty incidents (sideloads up to 1 mm, 0.5 to any position).

**FS** solution **saves costs**, increases productivity, and let use in existing applications without modification of any dimension.

AZOL GAS

# FS (FLEX SIDELOAD)

## ADVANTAGES

- **Saves** costs.
- Increases **productivity**.
- Same standard **dimensions**.
- Use in **existing applications**.
- **Extra** guiding. High incident.

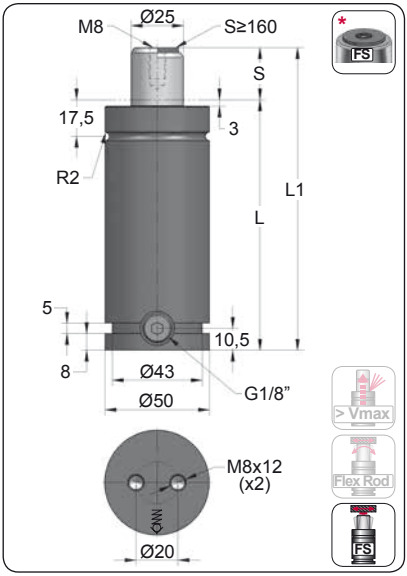


## FLEX SIDELOAD

**1 CW 6600**

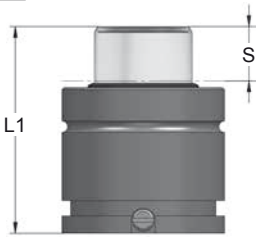


**2 CW-FS 6600**

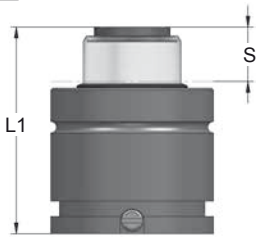


**3**

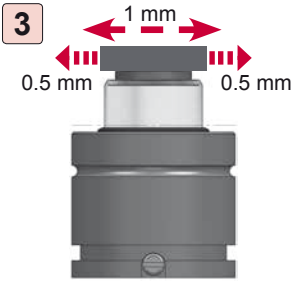


1. The FS system does not involve a variation of the dimensions of the gas spring.
2. Respects the same overall length L1 and the same nominal stroke S than a standard gas spring.
3. Allows lateral movement up to 1 mm, 0.5 mm in any direction from its centered position.

## HOW TO ORDER

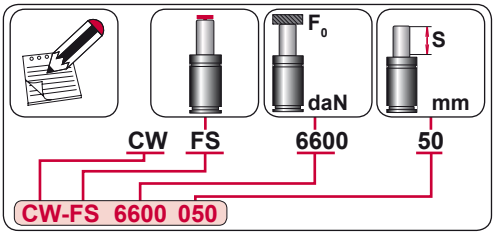

# REPAIR KIT

AZOL GAS

## SEAL KIT

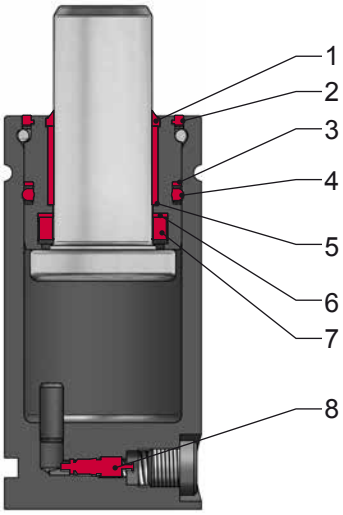





**KIT XXXXXXX-S**

| Nº | Description | Quantity |
|---|---|---|
| 1 | Wiper | 1 |
| 2 | Dust cover | 1 |
| 3 | O.ring protector | 1 |
| 4 | O.ring | 1 |
| 5 | Self-lubricated guide | 1 |
| 6 | Gasket protector | 1 |
| 7 | Gasket | 1 |
| 8 | Filling valve | 1 |
| | Oil bottle | 1 |
| | Operating instructions | 1 |

## CARTRIDGE KIT

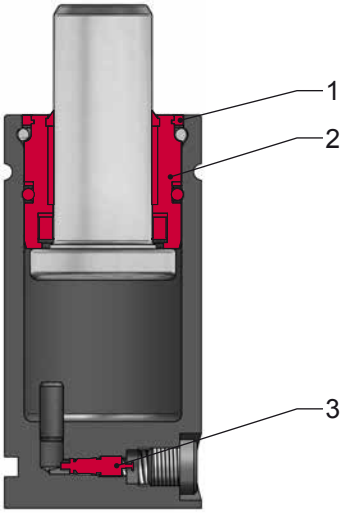




**KIT XXXXXXX-C**

| Nº | Description | Quantity |
|---|---|---|
| 1 | Dust cover | 1 |
| 2 | Cartridge | 1 |
| 3 | Filling valve | 1 |
| | Oil bottle | 1 |
| | Operating instructions | 1 |

AZOL GAS

# REPAIR KIT

## HOW TO ORDER KIT REPAIR (OLD VERSION)







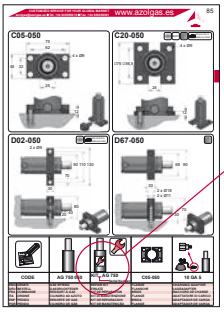


### HOW TO ORDER

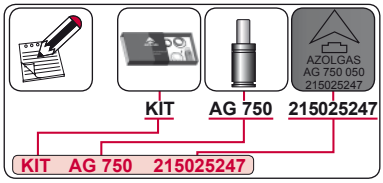


Should the gas spring be marked a serial number on the body (e.g. 215025247), the way to order the kit repair is as follows: KIT – gas spring model – serial number.

## HOW TO ORDER KIT REPAIR (NEW VERSION)







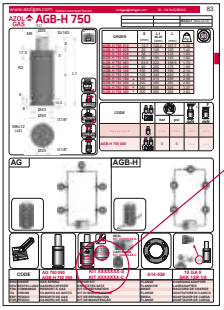





### HOW TO ORDER

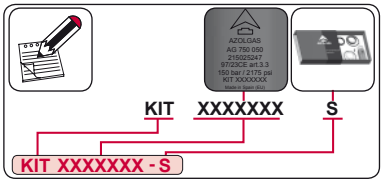


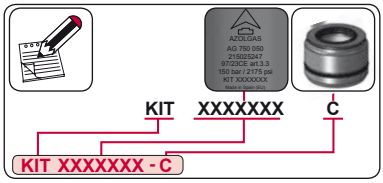


Should the gas spring be marked a serial number on the body (e.g. 215025247), but additionally it has engraved the word KIT with an associated kit repair number (e.g. KIT 1234567), the way to order the kit repair is as follows: KIT – serial number of the kit repair engraved – S (only seals) or KIT – serial number of the kit repair engraved – C (cartridge).

# NOTES

AZOL GAS

AZOL GAS

# AF_ MINI

| MODEL | $F_0$ | Ø | S | L1 | Pmax | Charge Port | | |
|---|---|---|---|---|---|---|---|---|
| AFB V2 | 50 | Ø12 | 7 - 80 | 56 - 205 | 180 | M6 | ✗ | ✗ |
| AFH V1 | 90 | Ø15 | 7 - 80 | 56 - 205 | 180 | M6 | ✗ | ✗ |
| AFJ V1 | 90 | Ø19 | 7 - 125 | 56 - 295 | 180 | M6 | ✗ | ✗ |
| AFK V1 | 100 | Ø20 | 10 - 80 | 74 - 214 | 160 | M6 | ✗ | ✗ |
| AFC | 200 | Ø25 | 7 - 125 | 56 - 295 | 180 | M6 | ✗ | ✓ |
| AFC-H 200 | 200 | Ø25 | 7 - 125 | 56 - 295 | 180 | M6 | ✓ | ✓ |
| AFNA | 200 | Ø25 | 10 - 50 | 65 - 145 | 180 | M6 | ✗ | ✓ |
| AF V1 | 200 | Ø25 | 12 - 100 | 78 - 254 | 180 | M6 | ✗ | ✗ |
| AFT V1 | 350 | Ø32 | 7 - 125 | 56 - 295 | 180 | M6 | ✗ | ✗ |

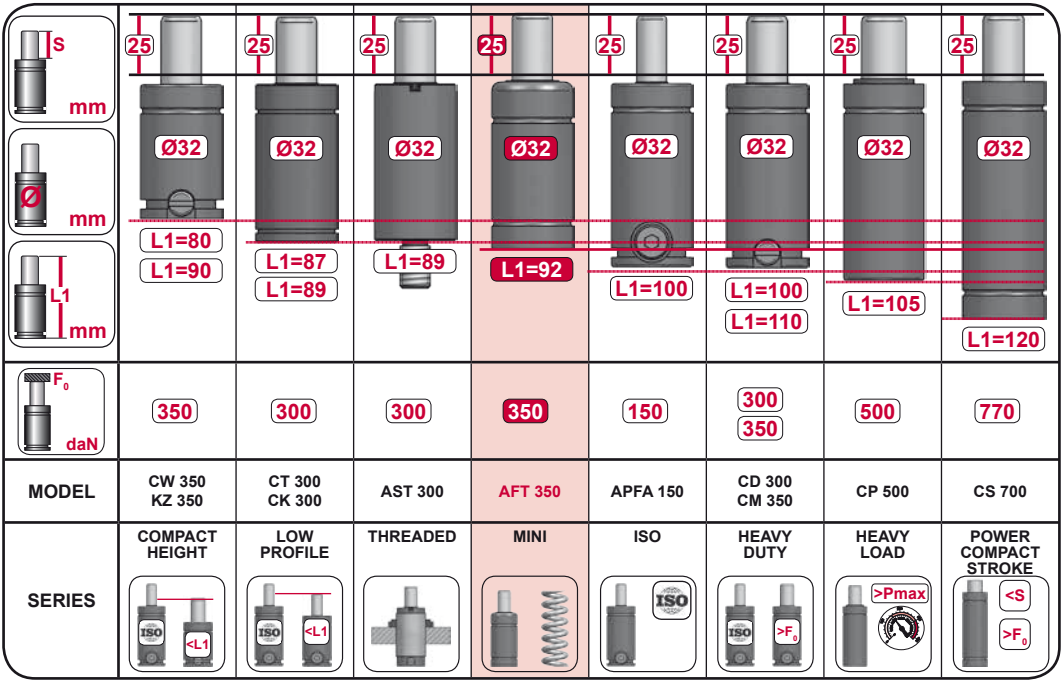

# AFB V1

*Mini*

AZOL GAS

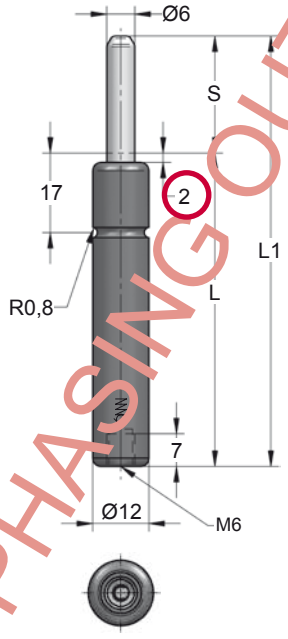


PHASING OUT

| CODE | S (mm) | L1 ±0,25 (mm) | L (mm) | Kg. |
|---|---|---|---|---|
| AFB ___ 007 V1 | 7 | 56 | 49 | 0.03 |
| AFB ___ 010 V1 | 10 | 62 | 52 | 0.03 |
| AFB ___ 012 V1 | 12.7 | 67.4 | 54.7 | 0.03 |
| AFB ___ 015 V1 | 15 | 72 | 57 | 0.04 |
| AFB ___ 019 V1 | 19 | 80 | 61 | 0.04 |
| AFB ___ 025 V1 | 25 | 92 | 67 | 0.04 |
| AFB ___ 038 V1 | 38 | 118 | 80 | 0.05 |
| AFB ___ 050 V1 | 50 | 142 | 92 | 0.06 |
| AFB ___ 063 V1 | 63.5 | 172 | 108.5 | 0.06 |
| AFB ___ 075 V1 | 75 | 195 | 120 | 0.07 |
| AFB ___ 080 V1 | 80 | 205 | 125 | 0.07 |

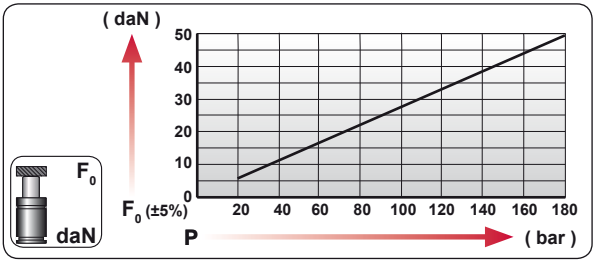


| CODE | COLOR | bar | psi | $F_0$ daN | $F_1$ daN |
|---|---|---|---|---|---|
| AFB 13 050 V1 | Green | 45 | 650 | 13 | 20 |
| AFB 25 050 V1 | Blue | 90 | 1305 | 25 | 40 |
| AFB 38 050 V1 | Red | 135 | 1960 | 38 | 60 |
| AFB 50 050 V1 | Yellow | 180 | 2610 | 50 | 80 |
| AFB XX 050 V1 | Black | 20-180 | 290-2610 | 6 - 50 | 9 - 80 |

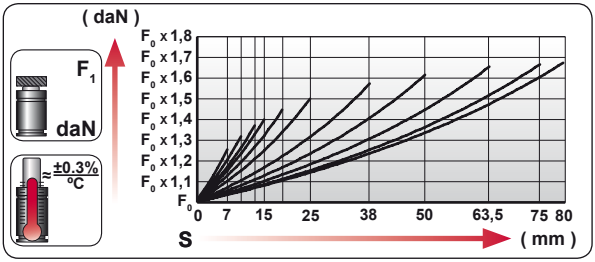


| | |
|---|---|
| ENG | ORDER |
| DEU | BESTELLUNG |
| FRA | COMMANDE |
| ITA | ORDINE |
| ESP | PEDIDO |
| POR | PEDIDO |




AFB 50 50

AFB 50 050 V1

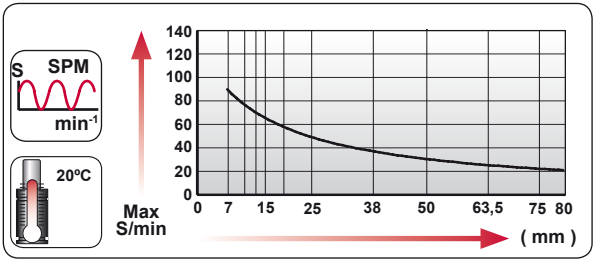


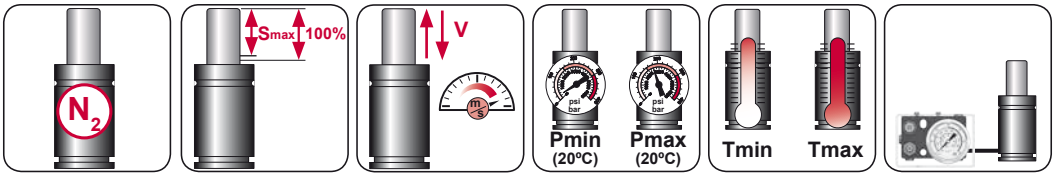


| $N_2$ | Smax < 90% | Vmax 1,6 m/s | bar psi 20 290 | bar psi 180 2610 | ºC ºF 0 32 | ºC ºF 80 176 |
|---|---|---|---|---|---|---|

AZOL GAS

# AFB V1 MOUNTS

*Mini*

## A14-012

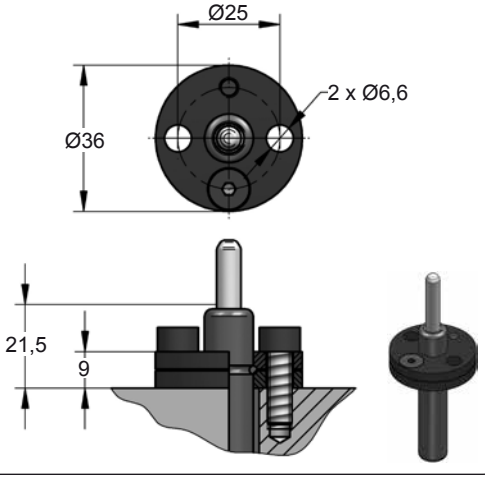


## A59-012

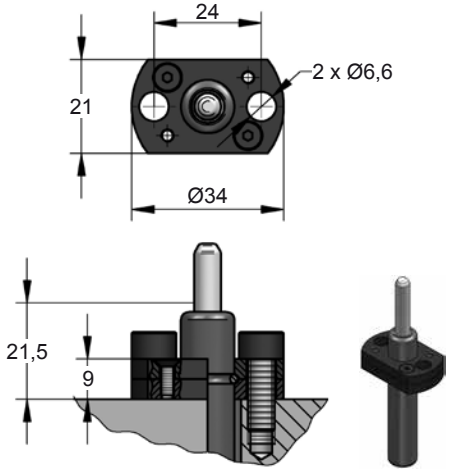




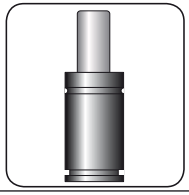




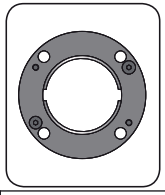

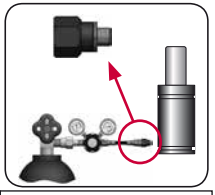

| CODE | | AFB 50 050 V1 | | A14-012 | 06 GA 11 |
|---|---|---|---|---|---|
| ENG | ORDER | GAS SPRING | REPAIR KIT | FLANGE | CHARGING ADAPTER |
| DEU | BESTELLUNG | GASDRUCKFEDER | ERSATZTEILSATZ | FLANSCHE | LADEADAPTER |
| FRA | COMMANDE | RESSORT À GAZ | KIT DE RÉPARATION | BRIDE | RACCORD DE CHARGE |
| ITA | ORDINE | CILINDRO AD AZOTO | KIT DI MANUTENZIONE | FLANGE | ADATTATORE DI CARICO |
| ESP | PEDIDO | RESORTE DE GAS | KIT DE REPARACION | BRIDA | ADAPTADOR DE CARGA |
| POR | PEDIDO | CILINDRO DE GÁS | KIT DE MANUTENÇÃO | FLANGE | ADAPTADOR DE CARGA |

# AFB V2

*Mini*

AZOL GAS

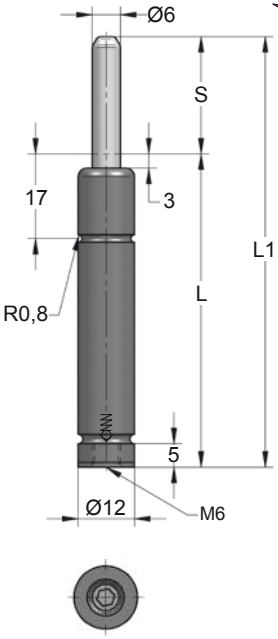


Newt

| CODE | S (mm) | L1 ±0,25 (mm) | L (mm) | Kg. |
|---|---|---|---|---|
| AFB ___ 007 V2 | 7 | 56 | 49 | 0.03 |
| AFB ___ 010 V2 | 10 | 62 | 52 | 0.03 |
| AFB ___ 012 V2 | 12.7 | 67.4 | 54.7 | 0.03 |
| AFB ___ 015 V2 | 15 | 72 | 57 | 0.04 |
| AFB ___ 019 V2 | 19 | 80 | 61 | 0.04 |
| AFB ___ 025 V2 | 25 | 92 | 67 | 0.04 |
| AFB ___ 038 V2 | 38 | 118 | 80 | 0.05 |
| AFB ___ 050 V2 | 50 | 142 | 92 | 0.06 |
| AFB ___ 063 V2 | 63.5 | 172 | 108.5 | 0.06 |
| AFB ___ 075 V2 | 75 | 195 | 120 | 0.07 |
| AFB ___ 080 V2 | 80 | 205 | 125 | 0.07 |

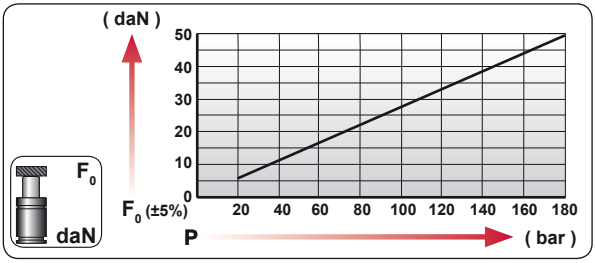


| CODE | COLOR | bar | psi | F0 daN | F1 daN |
|---|---|---|---|---|---|
| AFB 13 050 V2 | Green | 45 | 650 | 13 | 20 |
| AFB 25 050 V2 | Blue | 90 | 1305 | 25 | 40 |
| AFB 38 050 V2 | Red | 135 | 1960 | 38 | 60 |
| AFB 50 050 V2 | Yellow | 180 | 2610 | 50 | 80 |
| AFB XX 050 V2 | Black | 20-180 | 290-2610 | 6 - 50 | 9 - 80 |

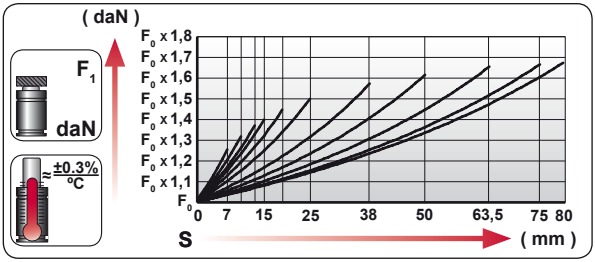


| | |
|---|---|
| ENG | ORDER |
| DEU | BESTELLUNG |
| FRA | COMMANDE |
| ITA | ORDINE |
| ESP | PEDIDO |
| POR | PEDIDO |

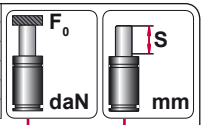


AFB 50 50

AFB 50 050 V2

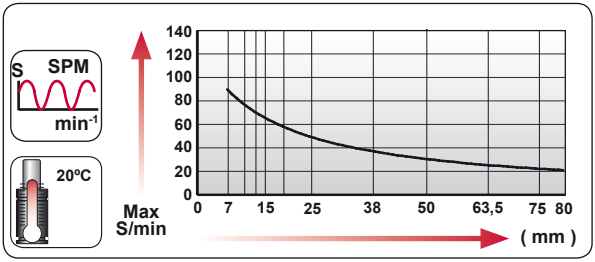





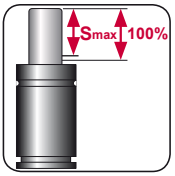


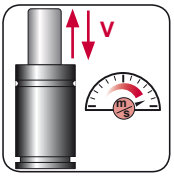





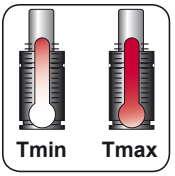




| $N_2$ | Smax < 90% | Vmax 1,6 m/s | bar psi 20 290 | bar psi 180 2610 | °C °F 0 32 | °C °F 80 176 | |
|---|---|---|---|---|---|---|---|

AZOL GAS

# AFB V2 MOUNTS

*Mini*

## A14-012

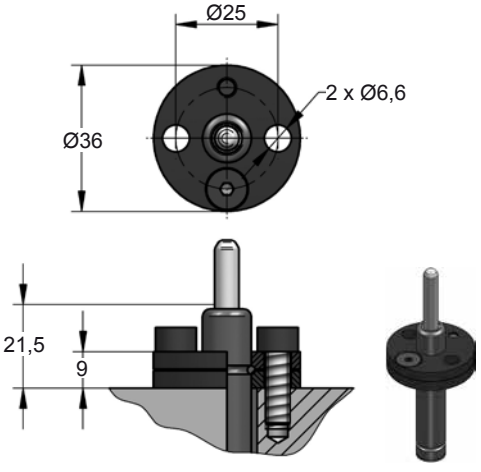


## A59-012

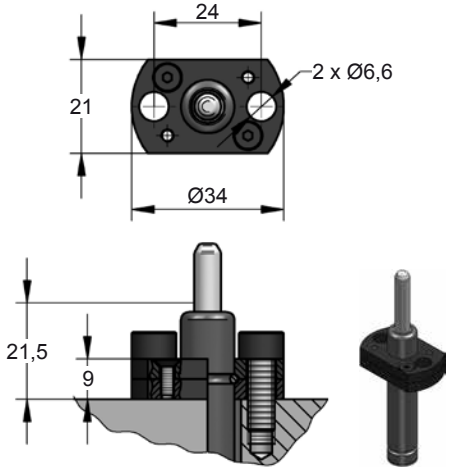




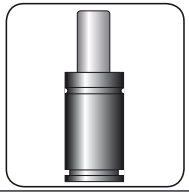




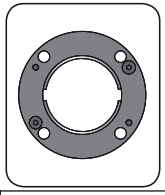

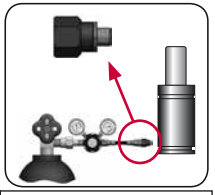

| CODE | | AFB 50 050 V2 | | A14-012 | 06 GA 11 |
|---|---|---|---|---|---|
| ENG | ORDER | GAS SPRING | REPAIR KIT | FLANGE | CHARGING ADAPTER |
| DEU | BESTELLUNG | GASDRUCKFEDER | ERSATZTEILSATZ | FLANSCHE | LADEADAPTER |
| FRA | COMMANDE | RESSORT À GAZ | KIT DE RÉPARATION | BRIDE | RACCORD DE CHARGE |
| ITA | ORDINE | CILINDRO AD AZOTO | KIT DI MANUTENZIONE | FLANGE | ADATTATORE DI CARICO |
| ESP | PEDIDO | RESORTE DE GAS | KIT DE REPARACION | BRIDA | ADAPTADOR DE CARGA |
| POR | PEDIDO | CILINDRO DE GÁS | KIT DE MANUTENÇÃO | FLANGE | ADAPTADOR DE CARGA |

# AFH
*Mini*

AZOL GAS

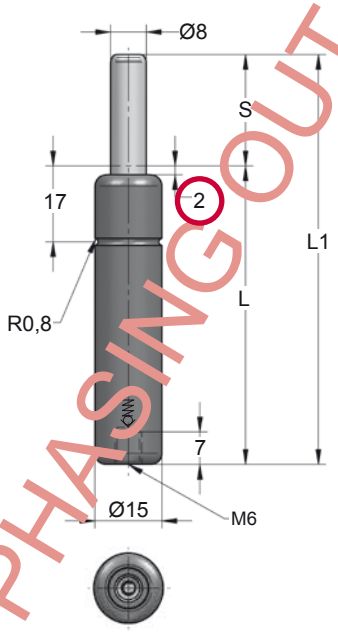


PHASING OUT

| CODE | S (mm) | L1 ±0,25 (mm) | L (mm) | Kg. |
|---|---|---|---|---|
| AFH ___ 007 | 7 | 56 | 49 | 0.06 |
| AFH ___ 010 | 10 | 62 | 52 | 0.06 |
| AFH ___ 012 | 12.7 | 67.4 | 54.7 | 0.06 |
| AFH ___ 015 | 15 | 72 | 57 | 0.06 |
| AFH ___ 019 | 19 | 80 | 61 | 0.07 |
| AFH ___ 025 | 25 | 92 | 67 | 0.07 |
| AFH ___ 038 | 38 | 118 | 80 | 0.08 |
| AFH ___ 050 | 50 | 142 | 92 | 0.09 |
| AFH ___ 063 | 63.5 | 172 | 108.5 | 0.10 |
| AFH ___ 075 | 75 | 195 | 120 | 0.11 |
| AFH ___ 080 | 80 | 205 | 125 | 0.12 |

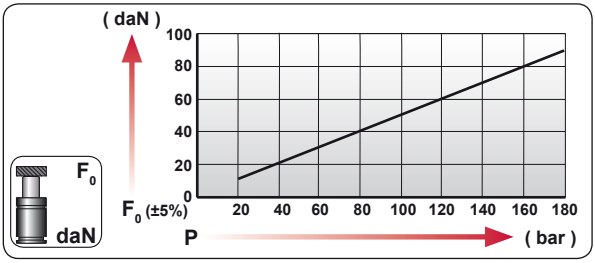


| CODE | COLOR | bar | psi | $F_0$ daN | $F_1$ daN |
|---|---|---|---|---|---|
| AFH 18 050 | Green | 35 | 510 | 18 | 35 |
| AFH 35 050 | Blue | 70 | 1015 | 35 | 70 |
| AFH 50 050 | Red | 100 | 1450 | 50 | 100 |
| AFH 70 050 | Yellow | 140 | 2030 | 70 | 140 |
| AFH XX 050 | Black | 20-180 | 290-2610 | 10 - 90 | 20 - 180 |

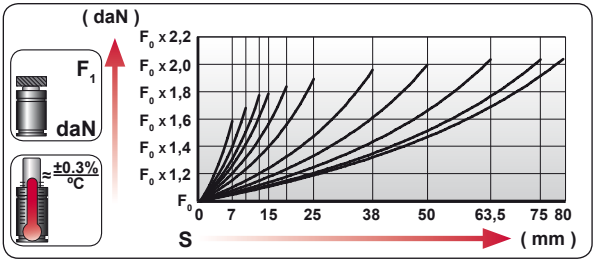


| | ENG | ORDER |
|---|---|---|
| | DEU | BESTELLUNG |
| | FRA | COMMANDE |
| | ITA | ORDINE |
| | ESP | PEDIDO |
| | POR | PEDIDO |

$F_0$ daN — S mm

AFH 90 50

AFH 90 050

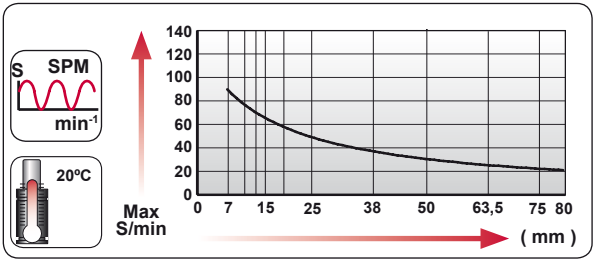


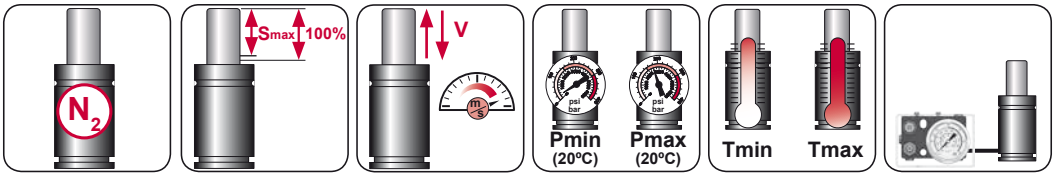


| $N_2$ | Smax < 90% | Vmax 1,6 m/s | bar psi 20 290 | bar psi 180 2610 | ºC ºF 0 32 | ºC ºF 80 176 |
|---|---|---|---|---|---|---|

AZOL GAS

# AFH MOUNTS

*Mini*

## A14-015

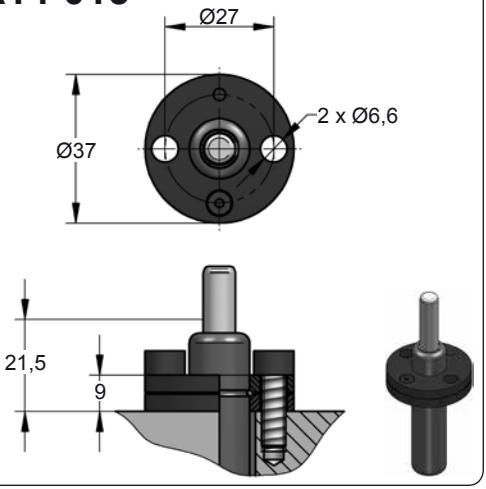


## A49-015

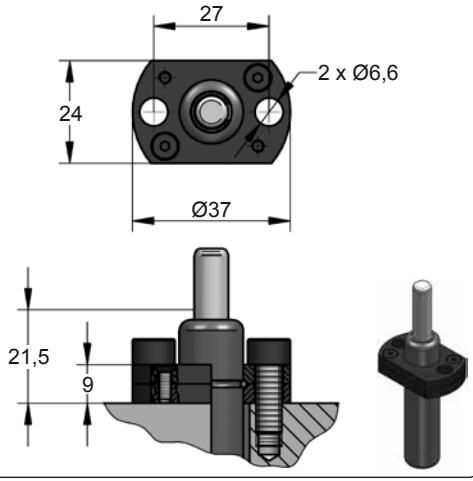




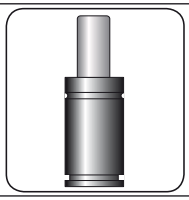




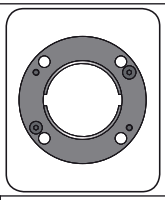

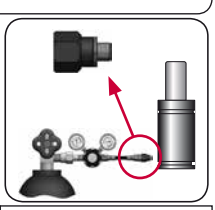

| CODE | | AFH 90 050 | | A14-015 | 06 GA 11 |
|---|---|---|---|---|---|
| ENG | ORDER | GAS SPRING | REPAIR KIT | FLANGE | CHARGING ADAPTER |
| DEU | BESTELLUNG | GASDRUCKFEDER | ERSATZTEILSATZ | FLANSCHE | LADEADAPTER |
| FRA | COMMANDE | RESSORT À GAZ | KIT DE RÉPARATION | BRIDE | RACCORD DE CHARGE |
| ITA | ORDINE | CILINDRO AD AZOTO | KIT DI MANUTENZIONE | FLANGE | ADATTATORE DI CARICO |
| ESP | PEDIDO | RESORTE DE GAS | KIT DE REPARACION | BRIDA | ADAPTADOR DE CARGA |
| POR | PEDIDO | CILINDRO DE GÁS | KIT DE MANUTENÇÃO | FLANGE | ADAPTADOR DE CARGA |

# AFH V1

*Mini*

AZOL GAS

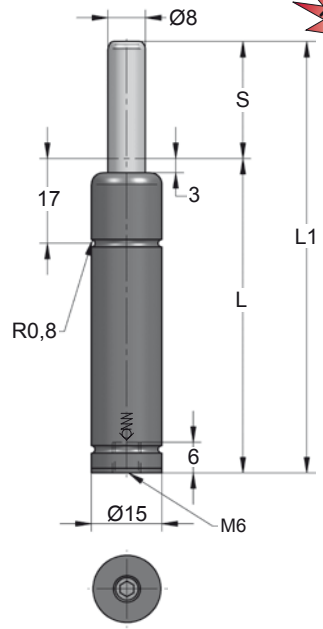


Newt

| CODE | S (mm) | L1 ±0,25 (mm) | L (mm) | Kg. |
|---|---|---|---|---|
| AFH ___ 007 V1 | 7 | 56 | 49 | 0.06 |
| AFH ___ 010 V1 | 10 | 62 | 52 | 0.06 |
| AFH ___ 012 V1 | 12.7 | 67.4 | 54.7 | 0.06 |
| AFH ___ 015 V1 | 15 | 72 | 57 | 0.06 |
| AFH ___ 019 V1 | 19 | 80 | 61 | 0.07 |
| AFH ___ 025 V1 | 25 | 92 | 67 | 0.07 |
| AFH ___ 038 V1 | 38 | 118 | 80 | 0.08 |
| AFH ___ 050 V1 | 50 | 142 | 92 | 0.09 |
| AFH ___ 063 V1 | 63.5 | 172 | 108.5 | 0.10 |
| AFH ___ 075 V1 | 75 | 195 | 120 | 0.11 |
| AFH ___ 080 V1 | 80 | 205 | 125 | 0.12 |

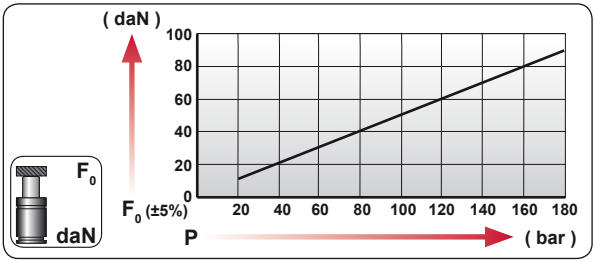


| CODE | COLOR | bar | psi | $F_0$ daN | $F_1$ daN |
|---|---|---|---|---|---|
| AFH 18 050 V1 | Green | 35 | 510 | 18 | 35 |
| AFH 35 050 V1 | Blue | 70 | 1015 | 35 | 70 |
| AFH 50 050 V1 | Red | 100 | 1450 | 50 | 100 |
| AFH 70 050 V1 | Yellow | 140 | 2030 | 70 | 140 |
| AFH XX 050 V1 | Black | 20-180 | 290-2610 | 10 - 90 | 20 - 180 |

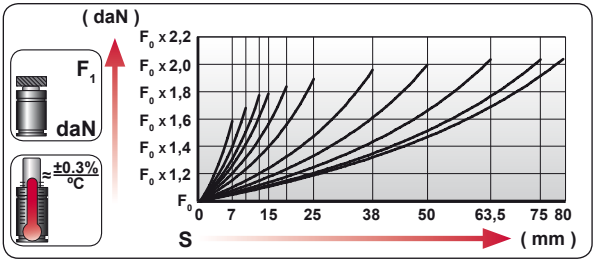


| | |
|---|---|
| ENG | ORDER |
| DEU | BESTELLUNG |
| FRA | COMMANDE |
| ITA | ORDINE |
| ESP | PEDIDO |
| POR | PEDIDO |




AFH 90 50

AFH 90 050 V1

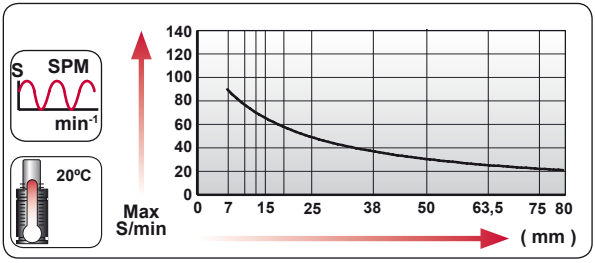





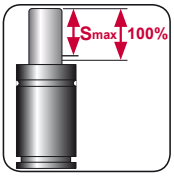


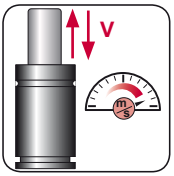


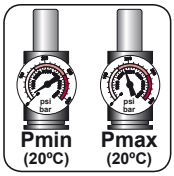


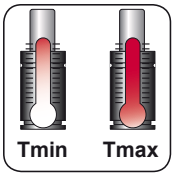




| $N_2$ | Smax < 90% | Vmax 1,6 m/s | bar psi 20 290 | bar psi 180 2610 | ºC ºF 0 32 | ºC ºF 80 176 | |
|---|---|---|---|---|---|---|---|

AZOL GAS

# AFH V1 MOUNTS

*Mini*

## A14-015

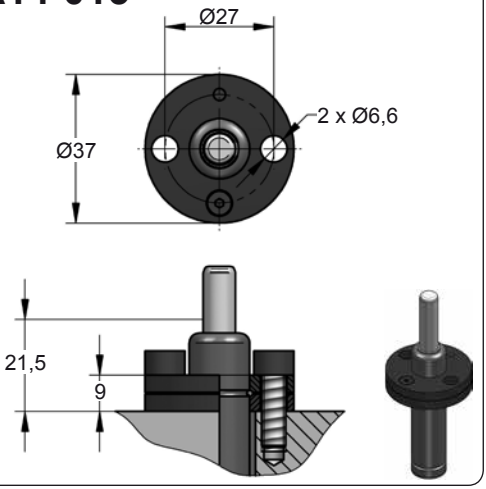


## A49-015

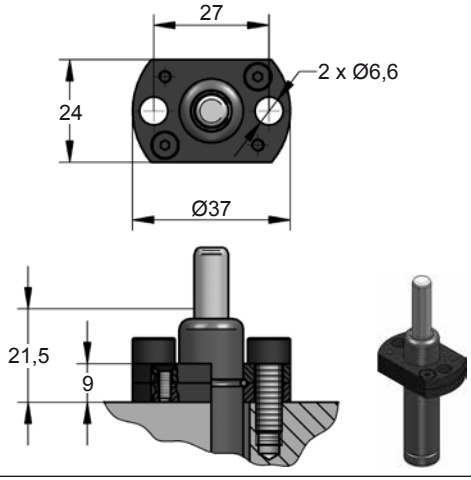




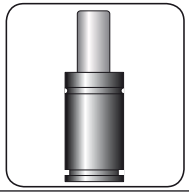




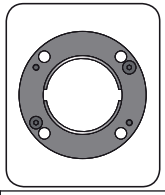

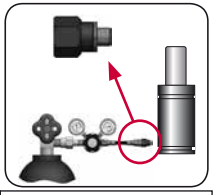

| CODE | | AFH 90 050 V1 | | A14-015 | 06 GA 11 |
|---|---|---|---|---|---|
| ENG | ORDER | GAS SPRING | REPAIR KIT | FLANGE | CHARGING ADAPTER |
| DEU | BESTELLUNG | GASDRUCKFEDER | ERSATZTEILSATZ | FLANSCHE | LADEADAPTER |
| FRA | COMMANDE | RESSORT À GAZ | KIT DE RÉPARATION | BRIDE | RACCORD DE CHARGE |
| ITA | ORDINE | CILINDRO AD AZOTO | KIT DI MANUTENZIONE | FLANGE | ADATTATORE DI CARICO |
| ESP | PEDIDO | RESORTE DE GAS | KIT DE REPARACION | BRIDA | ADAPTADOR DE CARGA |
| POR | PEDIDO | CILINDRO DE GÁS | KIT DE MANUTENÇÃO | FLANGE | ADAPTADOR DE CARGA |

# AFJ V1

*Mini*

| | | | |
|---|---|---|---|
| **BMW** B2 4006 | | **FORD** W-DX35-8036 | |
| **MB** B8 3180 220 000 002 | | | |
| | | | |

AZOL GAS

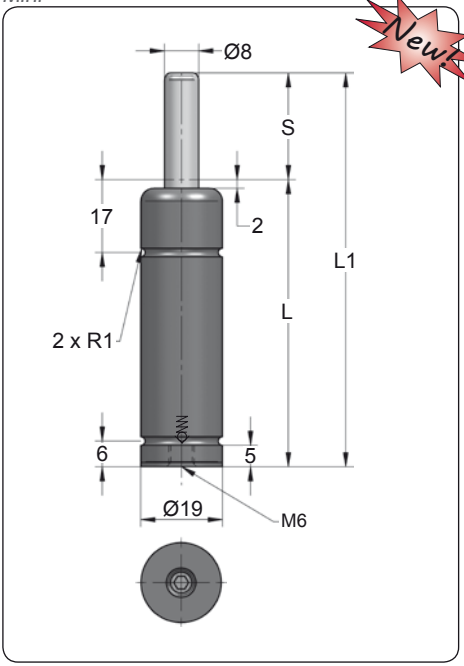


Newt

| CODE | S (mm) | L1 ±0,25 (mm) | L (mm) | Kg. |
|---|---|---|---|---|
| AFJ ___ 007 V1 | 7 | 56 | 49 | 0.07 |
| AFJ ___ 010 V1 | 10 | 62 | 52 | 0.07 |
| AFJ ___ 012 V1 | 12.7 | 67.4 | 54.7 | 0.08 |
| AFJ ___ 015 V1 | 15 | 72 | 57 | 0.08 |
| AFJ ___ 025 V1 | 25 | 92 | 67 | 0.10 |
| AFJ ___ 038 V1 | 38 | 118 | 80 | 0.11 |
| AFJ ___ 050 V1 | 50 | 142 | 92 | 0.12 |
| AFJ ___ 063 V1 | 63.5 | 172 | 109 | 0.14 |
| AFJ ___ 080 V1 | 80 | 205 | 125 | 0.16 |
| AFJ ___ 100 V1 | 100 | 245 | 145 | 0.18 |
| AFJ ___ 125 V1 | 125 | 295 | 170 | 0.21 |

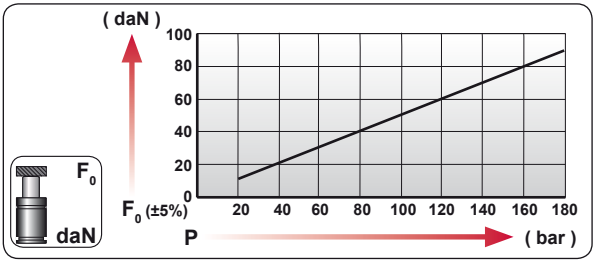


| CODE | COLOR | bar | psi | $F_0$ daN | $F_1$ daN |
|---|---|---|---|---|---|
| AFJ 30 050 V1 | Green | 60 | 870 | 30 | 40 |
| AFJ 50 050 V1 | Blue | 100 | 1450 | 50 | 70 |
| AFJ 70 050 V1 | Red | 140 | 2030 | 70 | 95 |
| AFJ 90 050 V1 | Yellow | 180 | 2610 | 90 | 120 |
| AFJ XX 050 V1 | Black | 20-180 | 290-2610 | 10 - 90 | 13 - 120 |

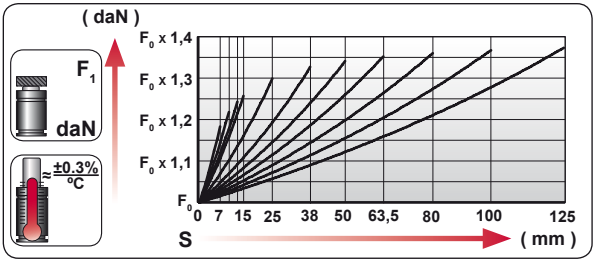


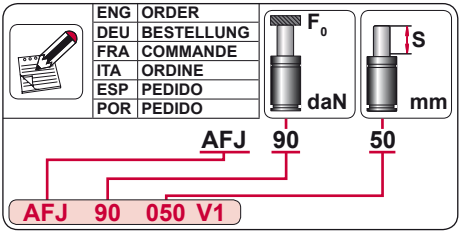


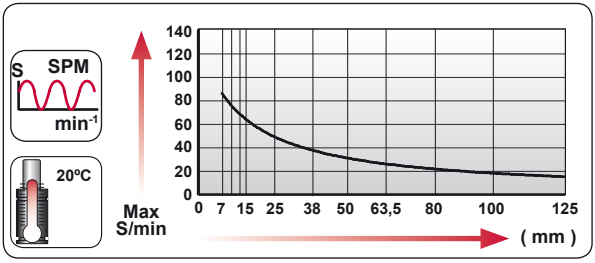


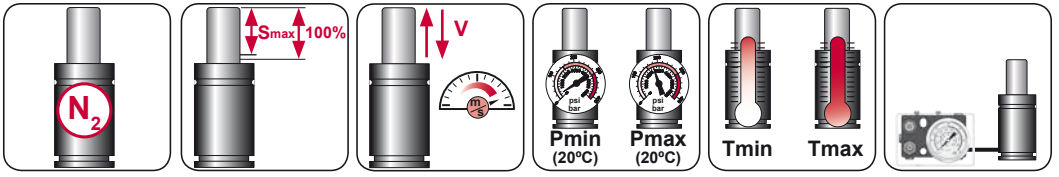


| $N_2$ | Smax < 90% | Vmax 1,6 m/s | bar psi 20 290 | bar psi 180 2610 | ºC ºF 0 32 | ºC ºF 80 176 | |
|---|---|---|---|---|---|---|---|

AZOL GAS

# AFJ V1 MOUNTS

*Mini*

## A14-019

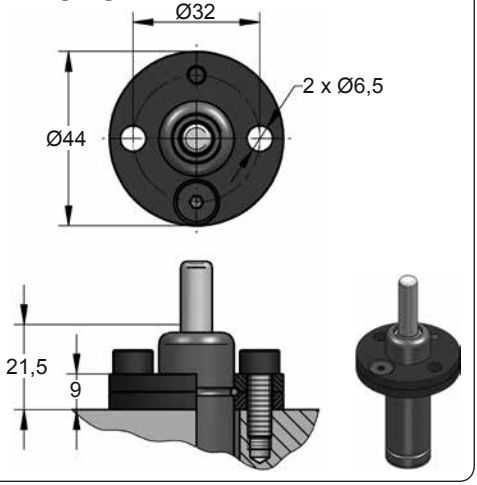


## A44-019

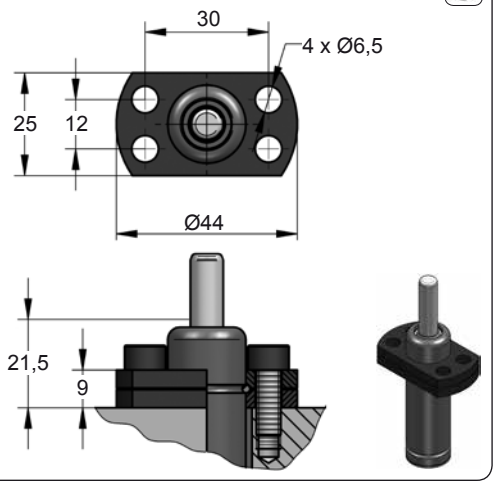


## A49-019

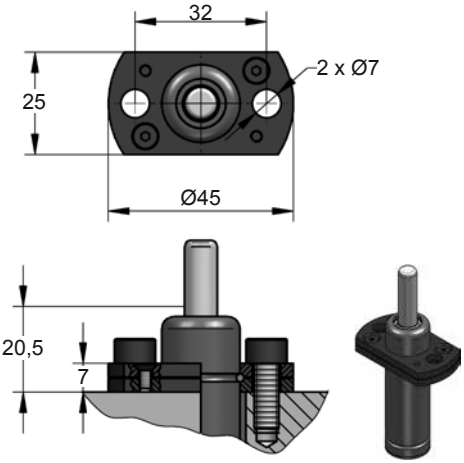









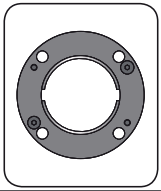

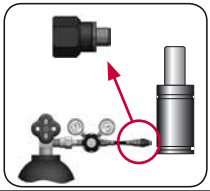

| CODE | | AFJ 90 050 V1 | | A14-019 | 06 GA 11 |
|---|---|---|---|---|---|
| ENG | ORDER | GAS SPRING | REPAIR KIT | FLANGE | CHARGING ADAPTER |
| DEU | BESTELLUNG | GASDRUCKFEDER | ERSATZTEILSATZ | FLANSCHE | LADEADAPTER |
| FRA | COMMANDE | RESSORT À GAZ | KIT DE RÉPARATION | BRIDE | RACCORD DE CHARGE |
| ITA | ORDINE | CILINDRO AD AZOTO | KIT DI MANUTENZIONE | FLANGE | ADATTATORE DI CARICO |
| ESP | PEDIDO | RESORTE DE GAS | KIT DE REPARACION | BRIDA | ADAPTADOR DE CARGA |
| POR | PEDIDO | CILINDRO DE GÁS | KIT DE MANUTENÇÃO | FLANGE | ADAPTADOR DE CARGA |

# AFK V1

*Mini*

AZOL GAS

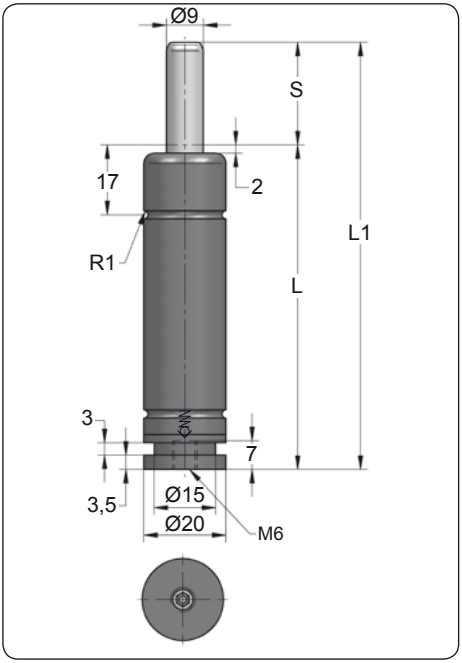


| CODE | S (mm) | L1 ±0,25 (mm) | L (mm) | Kg. |
|---|---|---|---|---|
| AFK ___ 010 V1 | 10 | 74 | 64 | 0.09 |
| AFK ___ 012 V1 | 12.7 | 79.4 | 66.7 | 0.10 |
| AFK ___ 016 V1 | 16 | 86 | 70 | 0.13 |
| AFK ___ 025 V1 | 25 | 104 | 79 | 0.15 |
| AFK ___ 038 V1 | 38 | 130 | 92 | 0.16 |
| AFK ___ 050 V1 | 50 | 154 | 104 | 0.18 |
| AFK ___ 063 V1 | 63 | 180 | 117 | 0.19 |
| AFK ___ 080 V1 | 80 | 214 | 134 | 0.23 |

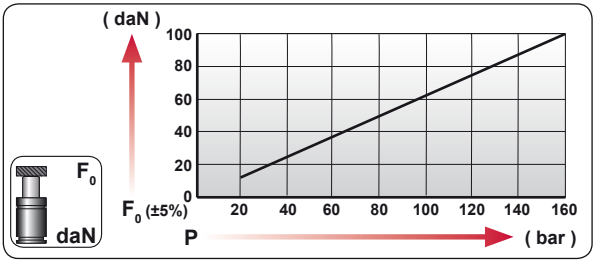


| CODE | COLOR | bar | psi | F0 daN | F1 daN |
|---|---|---|---|---|---|
| AFK 25 050 V1 | Green | 40 | 580 | 25 | 35 |
| AFK 50 050 V1 | Blue | 80 | 1160 | 50 | 70 |
| AFK 75 050 V1 | Red | 120 | 1740 | 75 | 105 |
| AFK 100 050 V1 | Yellow | 160 | 2320 | 100 | 140 |
| AFK XXX 050 V1 | Black | 20-160 | 290-2320 | 13 - 100 | 18 - 140 |

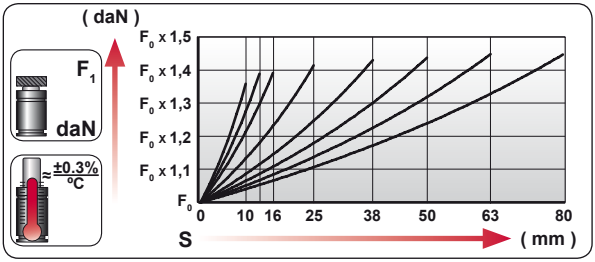


| | |
|---|---|
| ENG | ORDER |
| DEU | BESTELLUNG |
| FRA | COMMANDE |
| ITA | ORDINE |
| ESP | PEDIDO |
| POR | PEDIDO |

F0 daN — S mm

AFK 100 50

AFK 100 050 V1

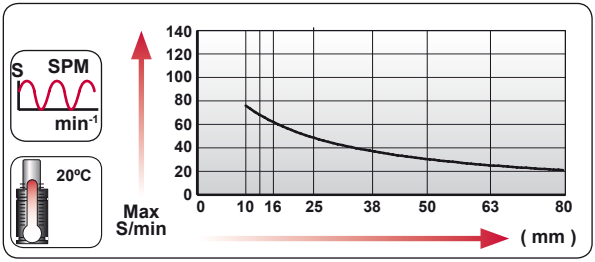


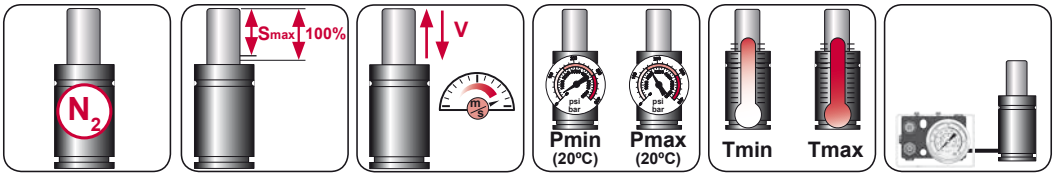


| $N_2$ | Smax < 90% | Vmax 1,6 m/s | bar psi 20 290 | bar psi 160 2320 | ºC ºF 0 32 | ºC ºF 80 176 | |
|---|---|---|---|---|---|---|---|

AZOL GAS

# AFK V1 MOUNTS

*Mini*

## A14-020

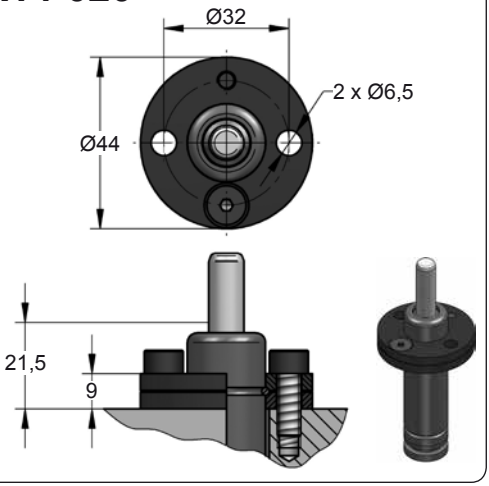


## C15-020

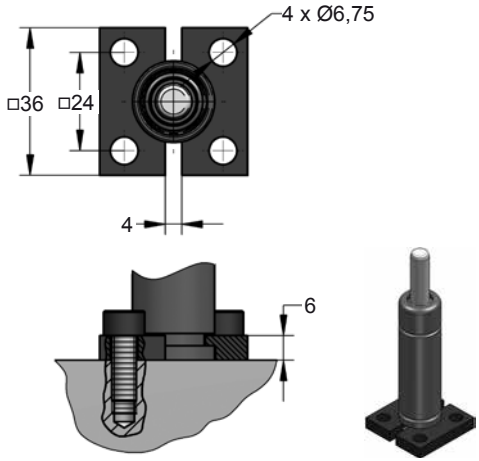









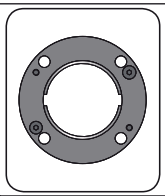

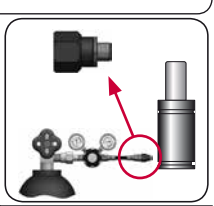

| CODE | | AFK 100 050 V1 | | A14-020 | 06 GA 11 |
|---|---|---|---|---|---|
| ENG | ORDER | GAS SPRING | REPAIR KIT | FLANGE | CHARGING ADAPTER |
| DEU | BESTELLUNG | GASDRUCKFEDER | ERSATZTEILSATZ | FLANSCHE | LADEADAPTER |
| FRA | COMMANDE | RESSORT À GAZ | KIT DE RÉPARATION | BRIDE | RACCORD DE CHARGE |
| ITA | ORDINE | CILINDRO AD AZOTO | KIT DI MANUTENZIONE | FLANGE | ADATTATORE DI CARICO |
| ESP | PEDIDO | RESORTE DE GAS | KIT DE REPARACION | BRIDA | ADAPTADOR DE CARGA |
| POR | PEDIDO | CILINDRO DE GÁS | KIT DE MANUTENÇÃO | FLANGE | ADAPTADOR DE CARGA |

# AFD V1

*Mini*

AZOL GAS

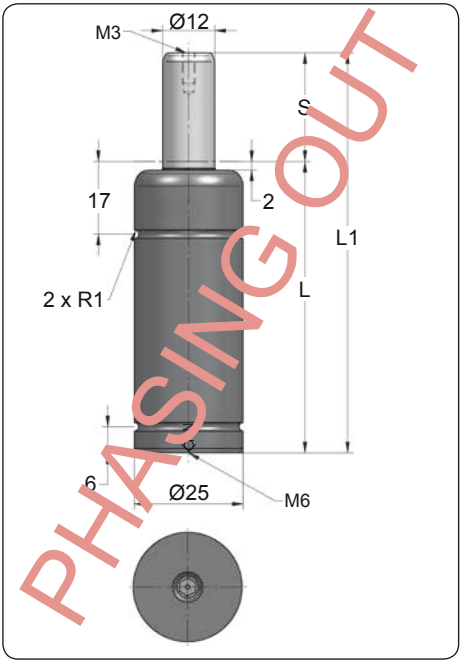


| CODE | S (mm) | L1 ±0,25 (mm) | L (mm) | Kg. |
|---|---|---|---|---|
| AFD ___ 007 V1 | 7 | 56 | 49 | 0.14 |
| AFD ___ 010 V1 | 10 | 62 | 52 | 0.14 |
| AFD ___ 012 V1 | 12.7 | 67.4 | 54.7 | 0.15 |
| AFD ___ 015 V1 | 15 | 72 | 57 | 0.16 |
| AFD ___ 025 V1 | 25 | 92 | 67 | 0.18 |
| AFD ___ 038 V1 | 38 | 118 | 80 | 0.21 |
| AFD ___ 050 V1 | 50 | 142 | 92 | 0.24 |
| AFD ___ 063 V1 | 63.5 | 172 | 108.5 | 0.28 |
| AFD ___ 080 V1 | 80 | 205 | 125 | 0.32 |
| AFD ___ 100 V1 | 100 | 245 | 145 | 0.36 |
| AFD ___ 125 V1 | 125 | 295 | 170 | 0.39 |

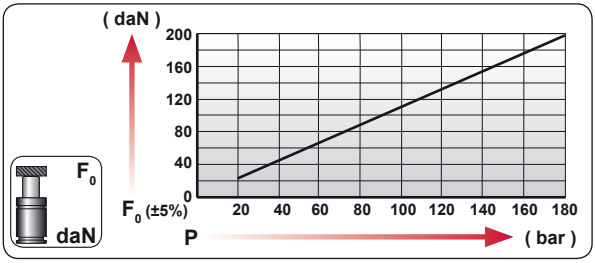


| CODE | COLOR | bar | psi | $F_0$ daN | $F_1$ daN |
|---|---|---|---|---|---|
| AFD 50 050 V1 | Green | 45 | 650 | 50 | 70 |
| AFD 100 050 V1 | Blue | 90 | 1305 | 100 | 140 |
| AFD 150 050 V1 | Red | 135 | 1960 | 150 | 210 |
| AFD 200 050 V1 | Yellow | 180 | 2610 | 200 | 280 |
| AFD XXX 050 V1 | Black | 20-180 | 290-2610 | 23 - 200 | 32 - 280 |

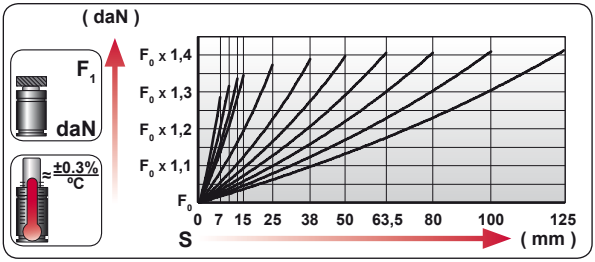


| | |
|---|---|
| ENG | ORDER |
| DEU | BESTELLUNG |
| FRA | COMMANDE |
| ITA | ORDINE |
| ESP | PEDIDO |
| POR | PEDIDO |

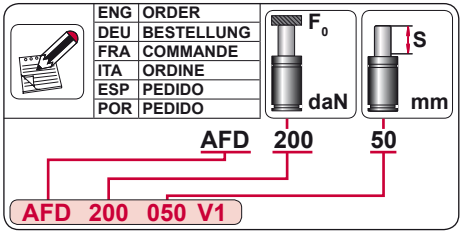


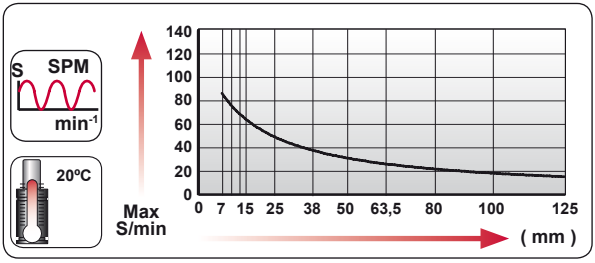


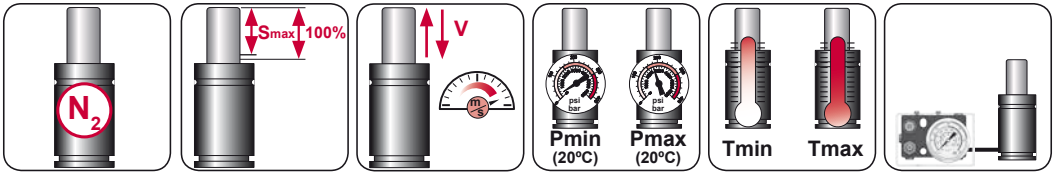


| $N_2$ | Smax < 90% | Vmax 1,6 m/s | bar psi 20 290 | bar psi 180 2610 | °C °F 0 32 | °C °F 80 176 |
|---|---|---|---|---|---|---|

AZOL GAS

# AFD V1 MOUNTS

*Mini*

## A14-025

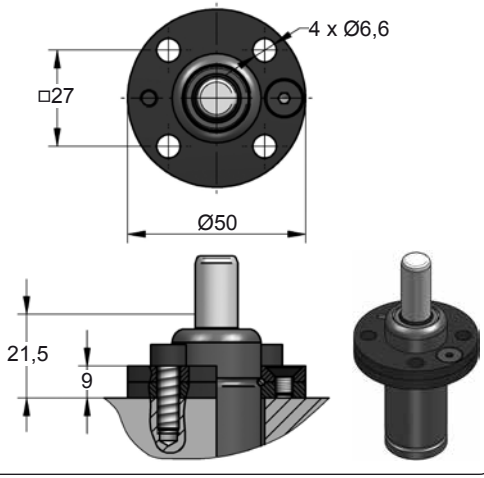


## A44-025

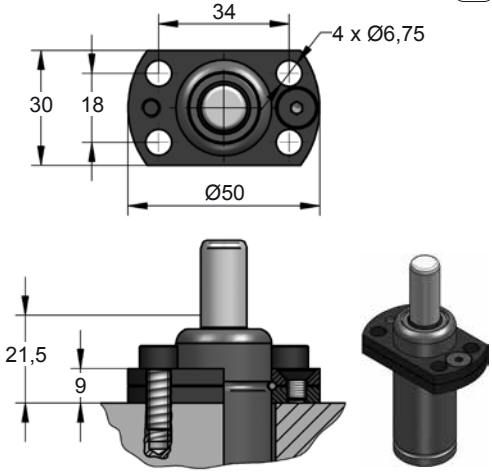


## A49-025

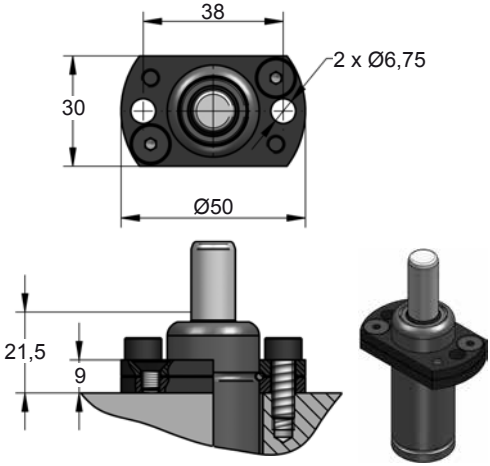


## D02-025

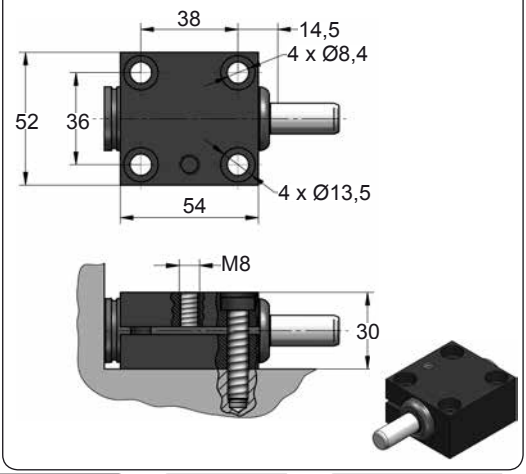









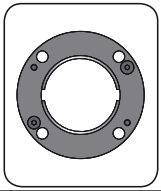

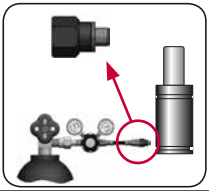

| CODE | | AFD 200 050 V1 | | A14-025 | 06 GA 11 |
|---|---|---|---|---|---|
| ENG | ORDER | GAS SPRING | REPAIR KIT | FLANGE | CHARGING ADAPTER |
| DEU | BESTELLUNG | GASDRUCKFEDER | ERSATZTEILSATZ | FLANSCHE | LADEADAPTER |
| FRA | COMMANDE | RESSORT À GAZ | KIT DE RÉPARATION | BRIDE | RACCORD DE CHARGE |
| ITA | ORDINE | CILINDRO AD AZOTO | KIT DI MANUTENZIONE | FLANGE | ADATTATORE DI CARICO |
| ESP | PEDIDO | RESORTE DE GAS | KIT DE REPARACION | BRIDA | ADAPTADOR DE CARGA |
| POR | PEDIDO | CILINDRO DE GÁS | KIT DE MANUTENÇÃO | FLANGE | ADAPTADOR DE CARGA |

# AFC
*Mini*

| | | | |
|---|---|---|---|
| **BMW** | B2 4006 | **PSA** | E24.54.815.G |
| **MB** | B8 3180 220 000 002 | | |
| **VW** | 39D 878 | | |

AZOL GAS

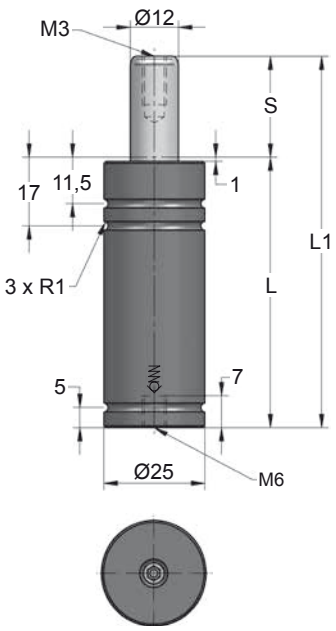


| ORDER | S (mm) | L1 ±0,25 (mm) | L (mm) | Kg. |
|---|---|---|---|---|
| AFC ___ 007 | 7 | 56 | 49 | 0.14 |
| AFC ___ 010 | 10 | 62 | 52 | 0.15 |
| AFC ___ 012 | 12.7 | 67.4 | 54.7 | 0.16 |
| AFC ___ 015 | 15 | 72 | 57 | 0.17 |
| AFC ___ 016 | 16 | 74 | 58 | 0.17 |
| AFC ___ 020 | 20 | 82 | 62 | 0.18 |
| AFC ___ 025 | 25 | 92 | 67 | 0.18 |
| AFC ___ 030 | 30 | 102 | 72 | 0.21 |
| AFC ___ 038 | 38 | 118 | 80 | 0.21 |
| AFC ___ 050 | 50 | 142 | 92 | 0.24 |
| AFC ___ 063 | 63.5 | 172 | 108.5 | 0.27 |
| AFC ___ 080 | 80 | 205 | 125 | 0.31 |
| AFC ___ 100 | 100 | 245 | 145 | 0.35 |
| AFC ___ 125 | 125 | 295 | 170 | 0.41 |

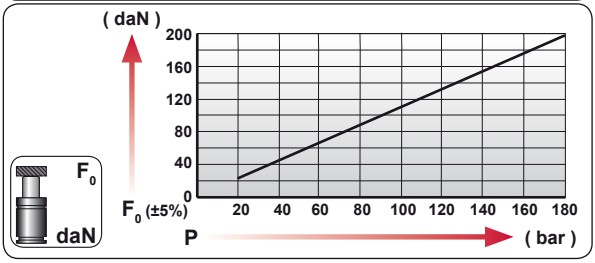


| CODE | COLOR | bar | psi | $F_0$ daN | $F_1$ daN |
|---|---|---|---|---|---|
| AFC 50 050 | Green | 45 | 650 | 50 | 75 |
| AFC 100 050 | Blue | 90 | 1305 | 100 | 155 |
| AFC 150 050 | Red | 135 | 1960 | 150 | 230 |
| AFC 200 050 | Yellow | 180 | 2610 | 200 | 305 |
| AFC XXX 050 | Black | 20-180 | 290-2610 | 23 - 200 | 35 - 305 |

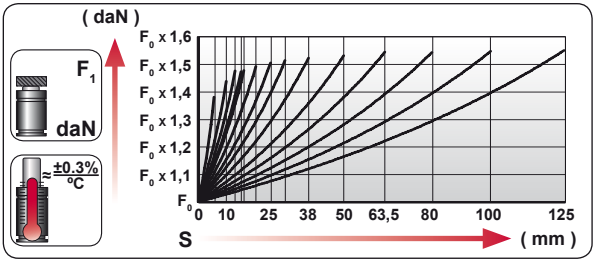


| ENG | ORDER |
|---|---|
| DEU | BESTELLUNG |
| FRA | COMMANDE |
| ITA | ORDINE |
| ESP | PEDIDO |
| POR | PEDIDO |

$F_0$ daN — S mm

AFC 200 50

AFC 200 050

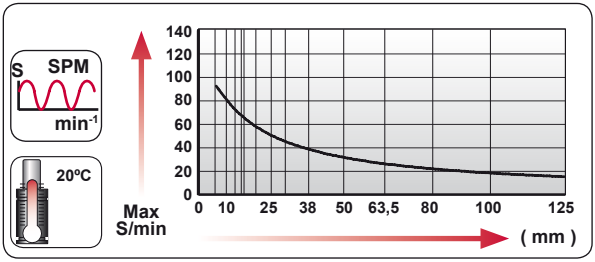


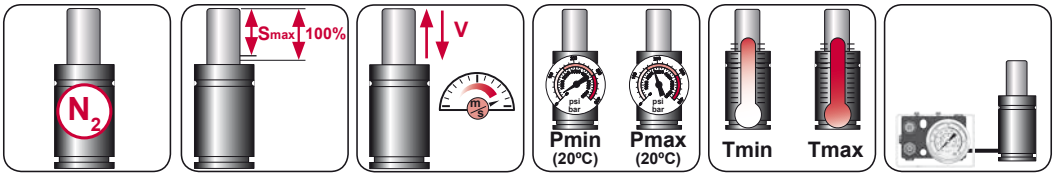


| $N_2$ | Smax < 90% | Vmax 1,6 m/s | bar psi 20 290 | bar psi 180 2610 | ºC ºF 0 32 | ºC ºF 80 176 | |
|---|---|---|---|---|---|---|---|

AZOL GAS

# AFC MOUNTS

*Mini*

## A14-025

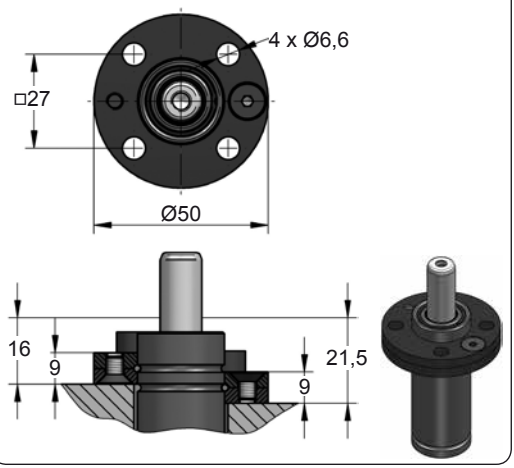


## A44-025

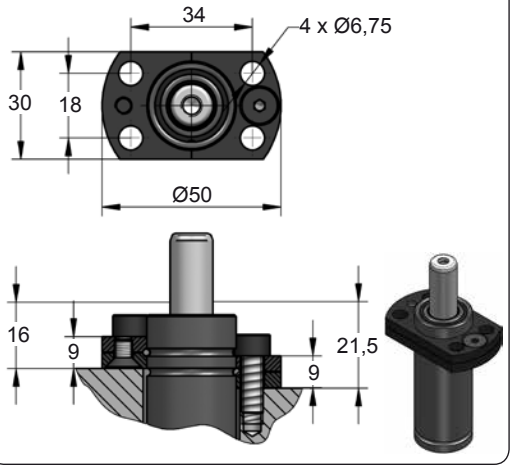


## A49-025

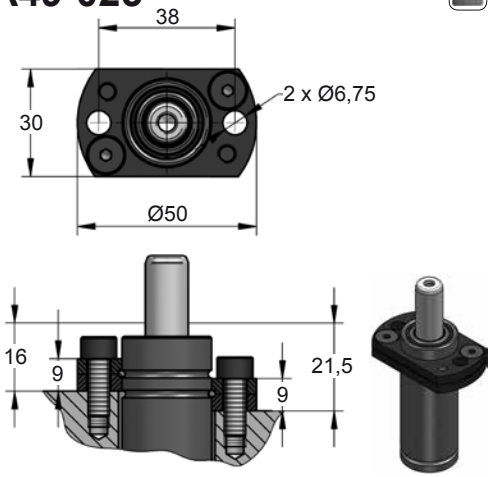


## D02-025

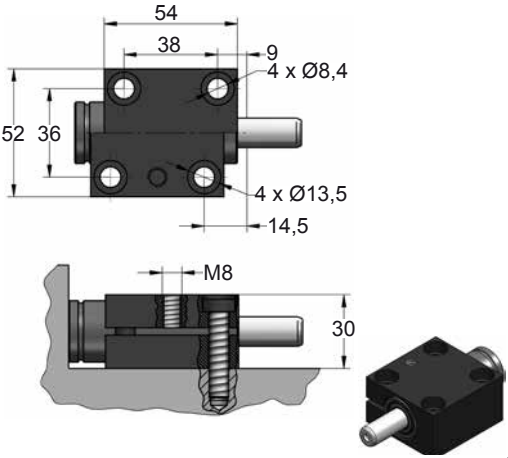









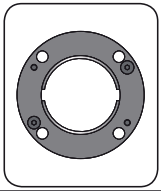

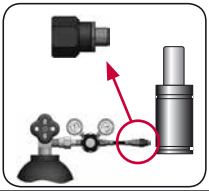

| CODE | | AFC 200 050 | KIT XXXXXXX-S<br>KIT XXXXXXX-C | A14-025 | 06 GA 11 |
|---|---|---|---|---|---|
| ENG | ORDER | GAS SPRING | REPAIR KIT | FLANGE | CHARGING ADAPTER |
| DEU | BESTELLUNG | GASDRUCKFEDER | ERSATZTEILSATZ | FLANSCHE | LADEADAPTER |
| FRA | COMMANDE | RESSORT À GAZ | KIT DE RÉPARATION | BRIDE | RACCORD DE CHARGE |
| ITA | ORDINE | CILINDRO AD AZOTO | KIT DI MANUTENZIONE | FLANGE | ADATTATORE DI CARICO |
| ESP | PEDIDO | RESORTE DE GAS | KIT DE REPARACION | BRIDA | ADAPTADOR DE CARGA |
| POR | PEDIDO | CILINDRO DE GÁS | KIT DE MANUTENÇÃO | FLANGE | ADAPTADOR DE CARGA |

# AFC-H 200

*Mini*

AZOL GAS

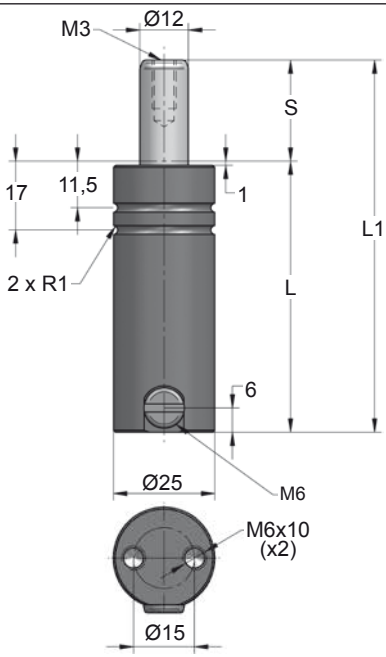


| ORDER | S (mm) | L1 ±0,25 (mm) | L (mm) | Kg. |
|---|---|---|---|---|
| AFC-H 200 007 | 7 | 56 | 49 | 0.15 |
| AFC-H 200 010 | 10 | 62 | 52 | 0.16 |
| AFC-H 200 012 | 12.7 | 67.4 | 54.7 | 0.16 |
| AFC-H 200 015 | 15 | 72 | 57 | 0.17 |
| AFC-H 200 016 | 16 | 74 | 58 | 0.17 |
| AFC-H 200 020 | 20 | 82 | 62 | 0.18 |
| AFC-H 200 025 | 25 | 92 | 67 | 0.19 |
| AFC-H 200 030 | 30 | 102 | 72 | 0.20 |
| AFC-H 200 038 | 38 | 118 | 80 | 0.22 |
| AFC-H 200 050 | 50 | 142 | 92 | 0.25 |
| AFC-H 200 063 | 63.5 | 172 | 108.5 | 0.28 |
| AFC-H 200 080 | 80 | 205 | 125 | 0.32 |
| AFC-H 200 100 | 100 | 245 | 145 | 0.36 |
| AFC-H 200 125 | 125 | 295 | 170 | 0.42 |

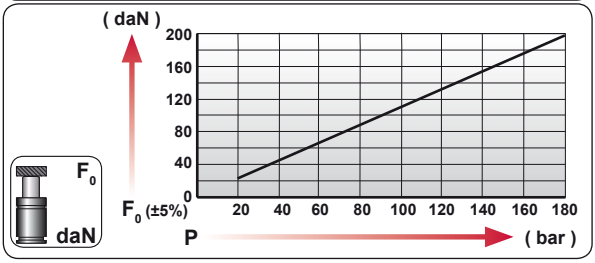


| CODE | bar | psi | F0 daN | F1 daN |
|---|---|---|---|---|
| --------- | --- | --- | --- | --- |
| AFC-H 200 050 | 0 | 0 | --- | --- |

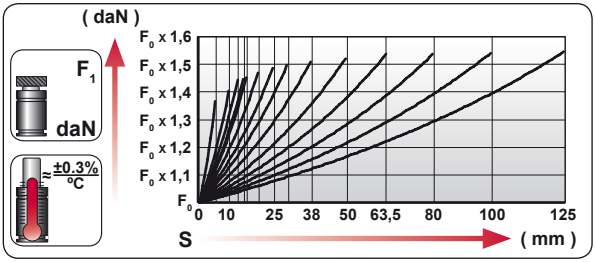


| ENG | ORDER |
|---|---|
| DEU | BESTELLUNG |
| FRA | COMMANDE |
| ITA | ORDINE |
| ESP | PEDIDO |
| POR | PEDIDO |




AFC-H 200 50

AFC-H 200 050

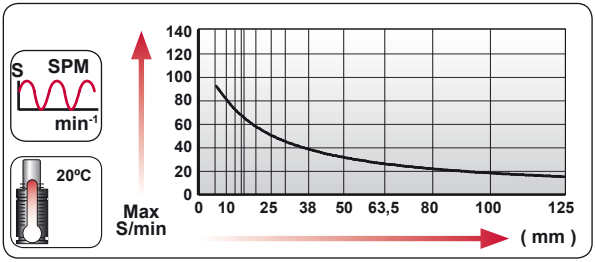


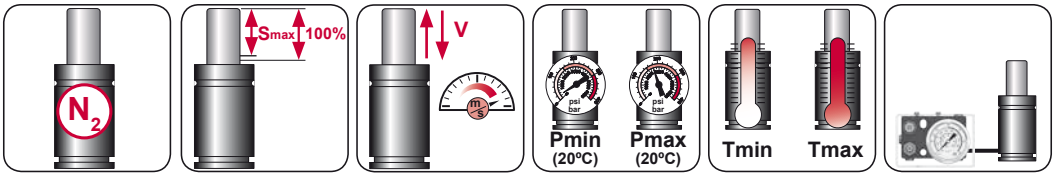


| $N_2$ | Smax < 90% | Vmax 1,6 m/s | bar psi 20 290 | bar psi 180 2610 | ºC ºF 0 32 | ºC ºF 80 176 | 600 CP- |
|---|---|---|---|---|---|---|---|

AZOL GAS

# AFC-H 200 MOUNTS

*Mini*

## A14-025

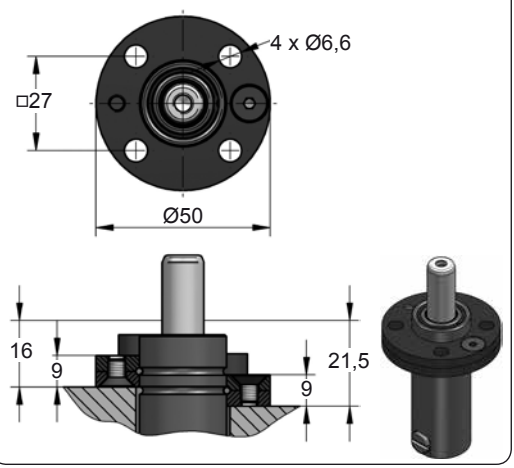


## A44-025

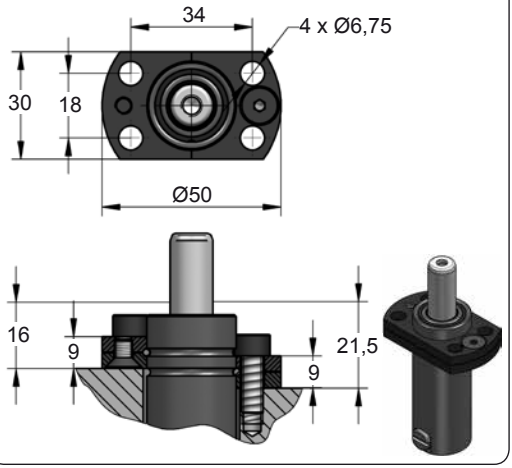


## A49-025

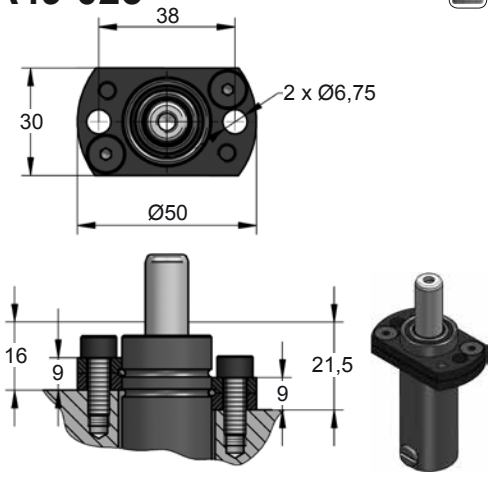









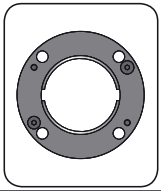

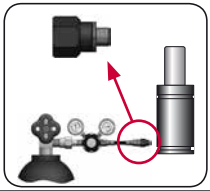

| CODE | | AFC-H 200 050 | | A14-025 | |
|---|---|---|---|---|---|
| ENG | ORDER | GAS SPRING | REPAIR KIT | FLANGE | CHARGING ADAPTER |
| DEU | BESTELLUNG | GASDRUCKFEDER | ERSATZTEILSATZ | FLANSCHE | LADEADAPTER |
| FRA | COMMANDE | RESSORT À GAZ | KIT DE RÉPARATION | BRIDE | RACCORD DE CHARGE |
| ITA | ORDINE | CILINDRO AD AZOTO | KIT DI MANUTENZIONE | FLANGE | ADATTATORE DI CARICO |
| ESP | PEDIDO | RESORTE DE GAS | KIT DE REPARACION | BRIDA | ADAPTADOR DE CARGA |
| POR | PEDIDO | CILINDRO DE GÁS | KIT DE MANUTENÇÃO | FLANGE | ADAPTADOR DE CARGA |

# AFNA

*Mini*

AZOL GAS

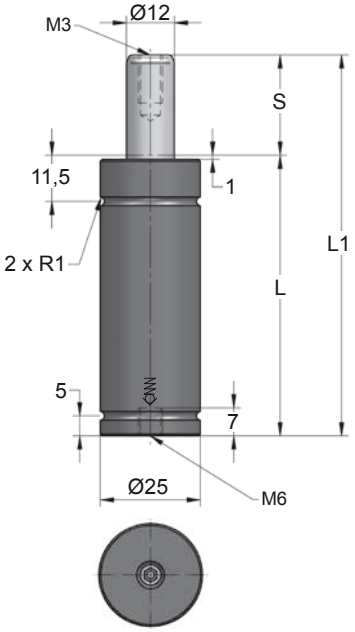


| CODE | S (mm) | L1 ±0,25 (mm) | L (mm) | Kg. |
|---|---|---|---|---|
| AFNA ___ 010 | 10 | 65 | 55 | 0.15 |
| AFNA ___ 012 | 12.7 | 70.4 | 57.7 | 0.16 |
| AFNA ___ 016 | 16 | 77 | 61 | 0.17 |
| AFNA ___ 025 | 25 | 95 | 70 | 0.18 |
| AFNA ___ 038 | 38 | 121 | 83 | 0.21 |
| AFNA ___ 050 | 50 | 145 | 95 | 0.24 |

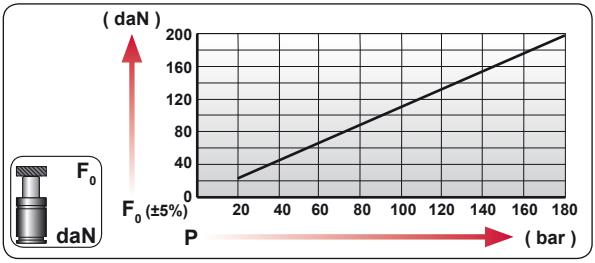


| CODE | COLOR | bar | psi | $F_0$ daN | $F_1$ daN |
|---|---|---|---|---|---|
| AFNA 50 050 | Green | 45 | 650 | 50 | 75 |
| AFNA 100 050 | Blue | 90 | 1305 | 100 | 155 |
| AFNA 150 050 | Red | 135 | 1960 | 150 | 230 |
| AFNA 200 050 | Yellow | 180 | 2610 | 200 | 305 |
| AFNA XXX 050 | Black | 20-180 | 290-2610 | 23 - 200 | 35 - 305 |

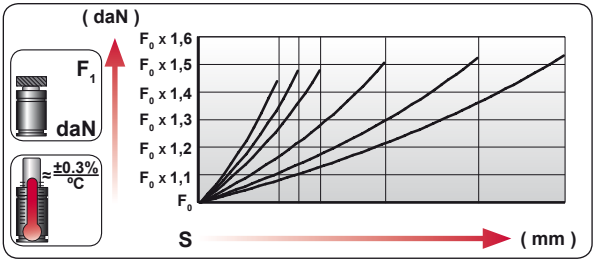


| | |
|---|---|
| ENG | ORDER |
| DEU | BESTELLUNG |
| FRA | COMMANDE |
| ITA | ORDINE |
| ESP | PEDIDO |
| POR | PEDIDO |




AFNA 200 050

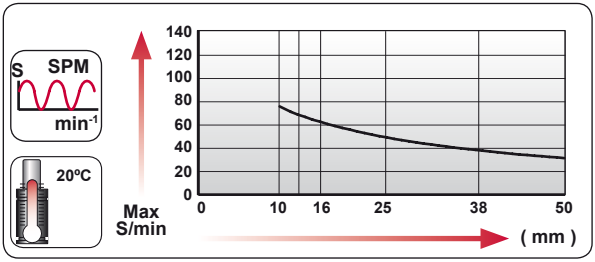


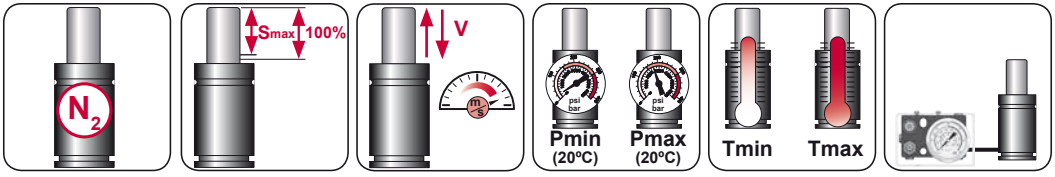


| $N_2$ | Smax < 90% | Vmax 1,6 m/s | bar psi 20 290 | bar psi 180 2610 | ºC ºF 0 32 | ºC ºF 80 176 |
|---|---|---|---|---|---|---|

AZOL GAS

# AFNA MOUNTS

*Mini*

## A14-025

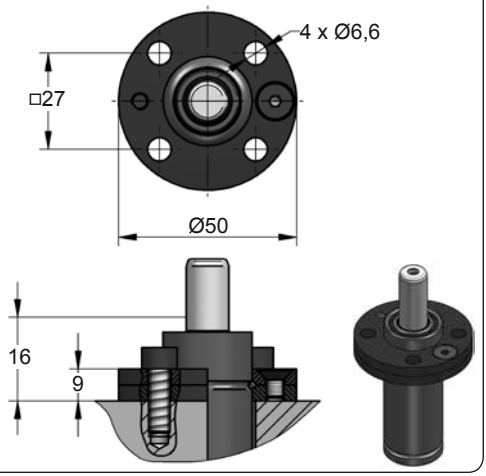


## A44-025

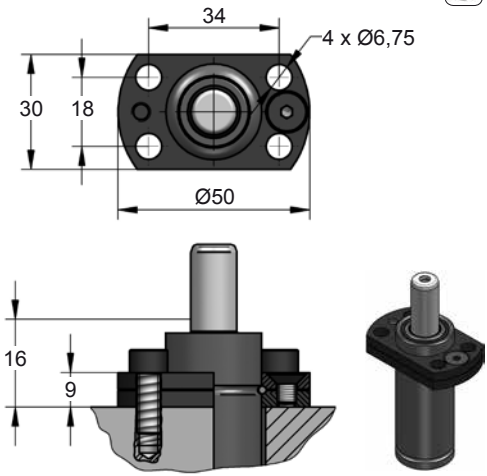


## A49-025

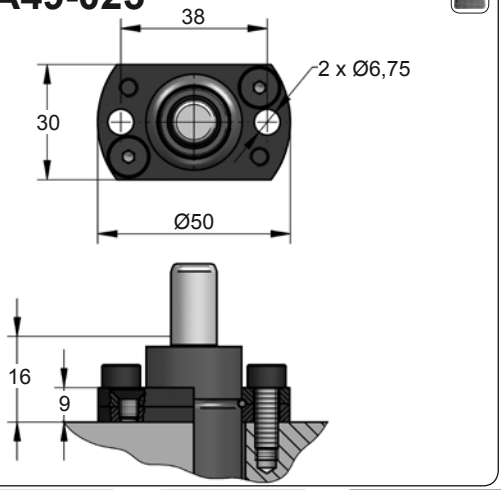


## D02-025

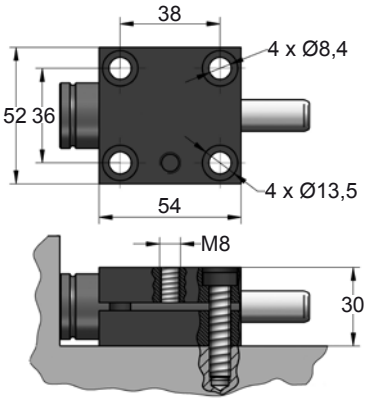




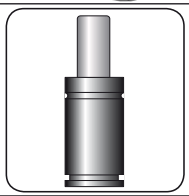




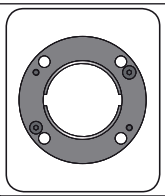

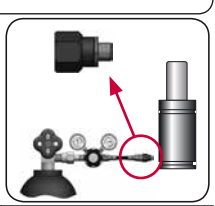

| CODE | | AFNA 200 050 | KIT XXXXXXX-S<br>KIT XXXXXXX-C | A14-025 | 06 GA 11 |
|---|---|---|---|---|---|
| ENG | ORDER | GAS SPRING | REPAIR KIT | FLANGE | CHARGING ADAPTER |
| DEU | BESTELLUNG | GASDRUCKFEDER | ERSATZTEILSATZ | FLANSCHE | LADEADAPTER |
| FRA | COMMANDE | RESSORT À GAZ | KIT DE RÉPARATION | BRIDE | RACCORD DE CHARGE |
| ITA | ORDINE | CILINDRO AD AZOTO | KIT DI MANUTENZIONE | FLANGE | ADATTATORE DI CARICO |
| ESP | PEDIDO | RESORTE DE GAS | KIT DE REPARACION | BRIDA | ADAPTADOR DE CARGA |
| POR | PEDIDO | CILINDRO DE GÁS | KIT DE MANUTENÇÃO | FLANGE | ADAPTADOR DE CARGA |

# AF V1

*Mini*

AZOL GAS

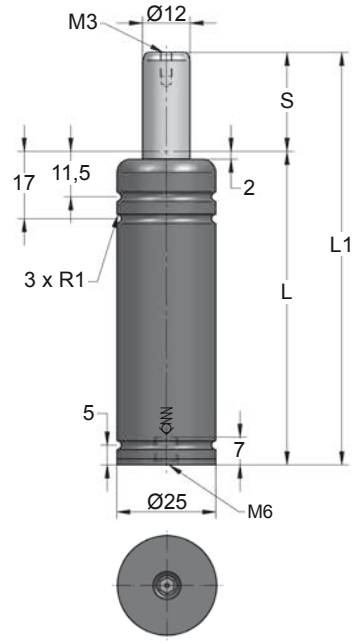


| CODE | S (mm) | L1 ±0,25 (mm) | L (mm) | Kg. |
|---|---|---|---|---|
| AF ___ 012 V1 | 12 | 78 | 66 | 0.17 |
| AF ___ 015 V1 | 15 | 84 | 69 | 0.18 |
| AF ___ 025 V1 | 25 | 104 | 79 | 0.21 |
| AF ___ 038 V1 | 38 | 130 | 92 | 0.23 |
| AF ___ 050 V1 | 50 | 154 | 104 | 0.27 |
| AF ___ 063 V1 | 63 | 180 | 117 | 0.29 |
| AF ___ 080 V1 | 80 | 214 | 134 | 0.30 |
| AF ___ 100 V1 | 100 | 254 | 154 | 0.38 |

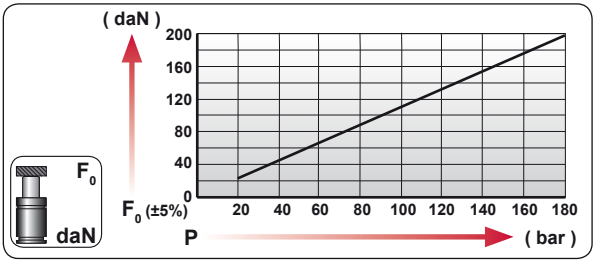


| CODE | COLOR | bar | psi | F0 daN | F1 daN |
|---|---|---|---|---|---|
| AF 50 050 V1 | Green | 45 | 650 | 50 | 70 |
| AF 100 050 V1 | Blue | 90 | 1305 | 100 | 135 |
| AF 150 050 V1 | Red | 135 | 1960 | 150 | 205 |
| AF 200 050 V1 | Yellow | 180 | 2610 | 200 | 270 |
| AF XXX 050 V1 | Black | 20-180 | 290-2610 | 23 - 200 | 30 - 270 |

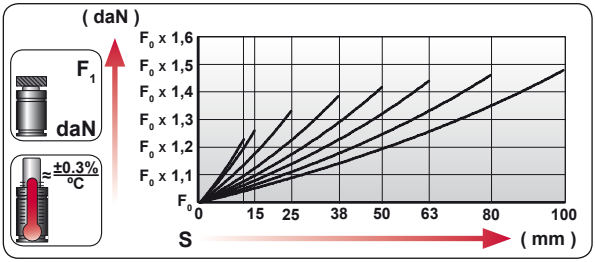


| | |
|---|---|
| ENG | ORDER |
| DEU | BESTELLUNG |
| FRA | COMMANDE |
| ITA | ORDINE |
| ESP | PEDIDO |
| POR | PEDIDO |

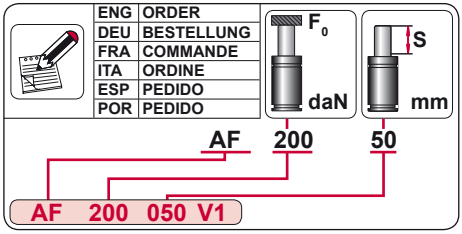


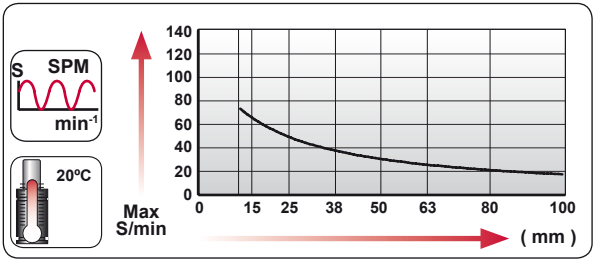


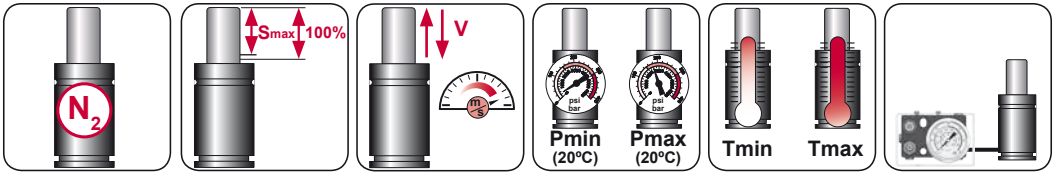


| $N_2$ | Smax < 90% | Vmax 1,6 m/s | bar psi 20 290 | bar psi 180 2610 | ºC ºF 0 32 | ºC ºF 80 176 | |
|---|---|---|---|---|---|---|---|

AZOL GAS

# AF V1 MOUNTS

*Mini*

## A14-025

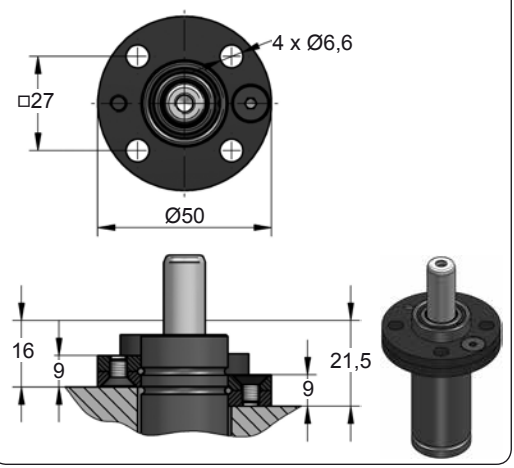









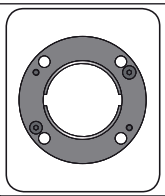

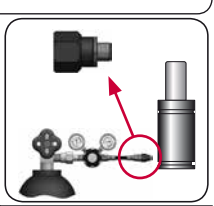

| CODE | | AF 200 050 V1 | | A14-025 | 06 GA 11 |
|---|---|---|---|---|---|
| ENG | ORDER | GAS SPRING | REPAIR KIT | FLANGE | CHARGING ADAPTER |
| DEU | BESTELLUNG | GASDRUCKFEDER | ERSATZTEILSATZ | FLANSCHE | LADEADAPTER |
| FRA | COMMANDE | RESSORT À GAZ | KIT DE RÉPARATION | BRIDE | RACCORD DE CHARGE |
| ITA | ORDINE | CILINDRO AD AZOTO | KIT DI MANUTENZIONE | FLANGE | ADATTATORE DI CARICO |
| ESP | PEDIDO | RESORTE DE GAS | KIT DE REPARACION | BRIDA | ADAPTADOR DE CARGA |
| POR | PEDIDO | CILINDRO DE GÁS | KIT DE MANUTENÇÃO | FLANGE | ADAPTADOR DE CARGA |

# AFT V1

*Mini*

| | | |
|---|---|---|
| | FORD W-DX35-8040 | |
| | | |
| | | |

AZOL GAS

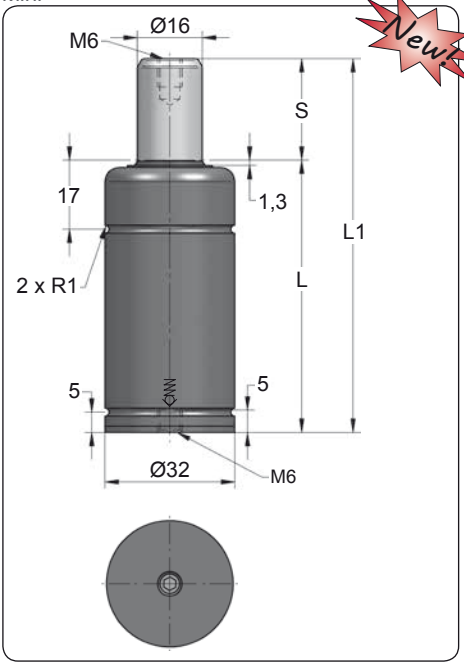


Newt

| CODE | S (mm) | L1 ±0,25 (mm) | L (mm) | Kg. |
|---|---|---|---|---|
| AFT ___ 007 V1 | 7 | 56 | 49 | 0.25 |
| AFT ___ 010 V1 | 10 | 62 | 52 | 0.26 |
| AFT ___ 012 V1 | 12.7 | 67.4 | 54.7 | 0.27 |
| AFT ___ 015 V1 | 15 | 72 | 57 | 0.28 |
| AFT ___ 025 V1 | 25 | 92 | 67 | 0.32 |
| AFT ___ 038 V1 | 38 | 118 | 80 | 0.37 |
| AFT ___ 050 V1 | 50 | 142 | 92 | 0.42 |
| AFT ___ 063 V1 | 63.5 | 172 | 108.5 | 0.48 |
| AFT ___ 080 V1 | 80 | 205 | 125 | 0.55 |
| AFT ___ 100 V1 | 100 | 245 | 145 | 0.63 |
| AFT ___ 125 V1 | 125 | 295 | 170 | 0.73 |

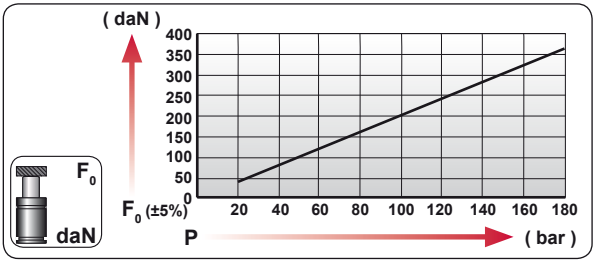


| CODE | COLOR | bar | psi | F0 daN | F1 daN |
|---|---|---|---|---|---|
| AFT 80 050 V1 | Green | 40 | 580 | 80 | 135 |
| AFT 160 050 V1 | Blue | 80 | 1160 | 160 | 265 |
| AFT 240 050 V1 | Red | 120 | 1740 | 240 | 400 |
| AFT 310 050 V1 | Yellow | 155 | 2450 | 310 | 515 |
| AFT XXX 050 V1 | Black | 20-180 | 290-2610 | 40 - 360 | 65 - 600 |

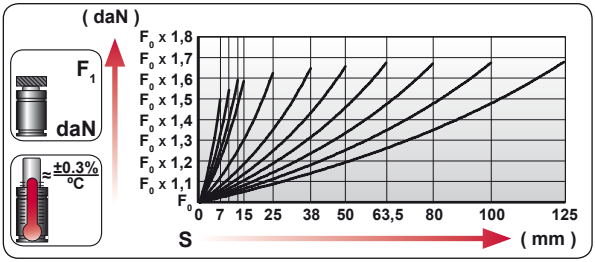


| | ENG | ORDER |
|---|---|---|
| | DEU | BESTELLUNG |
| | FRA | COMMANDE |
| | ITA | ORDINE |
| | ESP | PEDIDO |
| | POR | PEDIDO |

F0 daN — S mm

AFT 350 50

AFT 350 050 V1

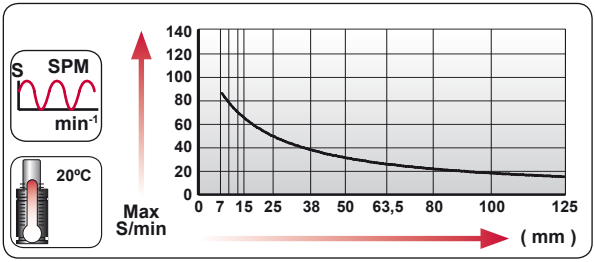


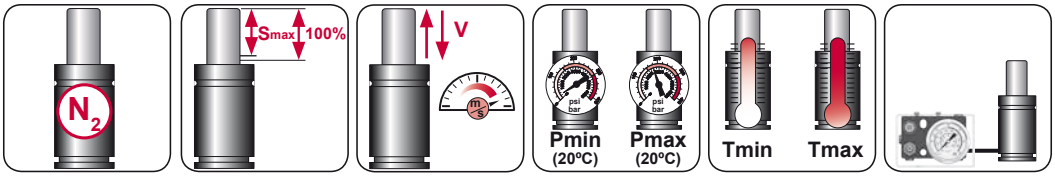


| $N_2$ | Smax < 90% | Vmax 1,6 m/s | bar psi 20 290 | bar psi 180 2610 | °C °F 0 32 | °C °F 80 176 | |
|---|---|---|---|---|---|---|---|

AZOL GAS

# AFT V1 MOUNTS

Mini

## A14-032

ISO E24.54.815.G EM24.54.700/F

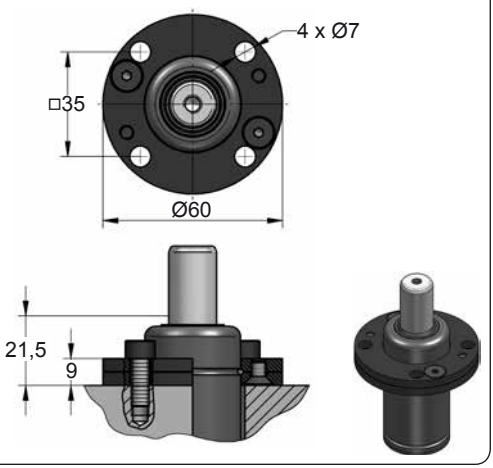


## A34-032

VDI

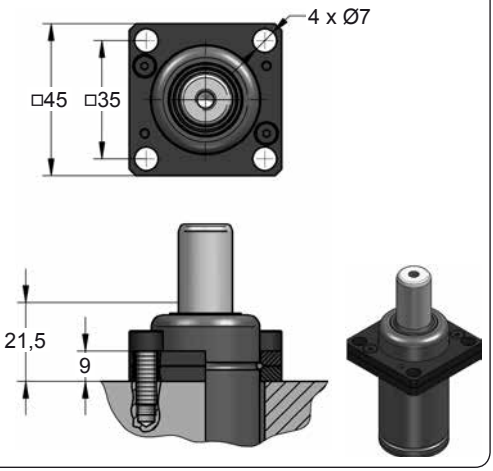


## A44-032

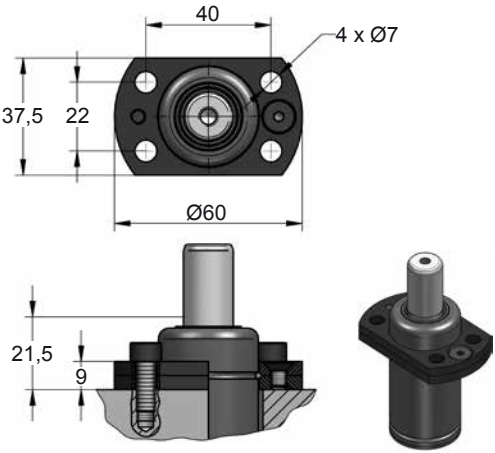


## D02-032

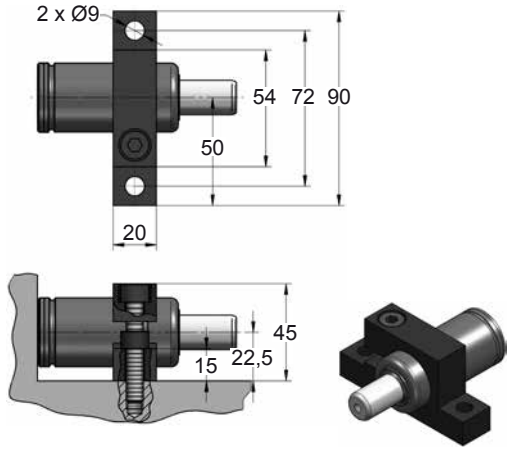









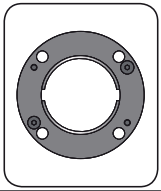

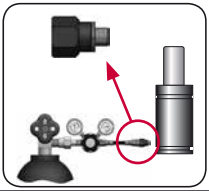

| CODE | | AFT 350 050 V1 | | A14-032 | 06 GA 11 |
|---|---|---|---|---|---|
| ENG | ORDER | GAS SPRING | REPAIR KIT | FLANGE | CHARGING ADAPTER |
| DEU | BESTELLUNG | GASDRUCKFEDER | ERSATZTEILSATZ | FLANSCHE | LADEADAPTER |
| FRA | COMMANDE | RESSORT À GAZ | KIT DE RÉPARATION | BRIDE | RACCORD DE CHARGE |
| ITA | ORDINE | CILINDRO AD AZOTO | KIT DI MANUTENZIONE | FLANGE | ADATTATORE DI CARICO |
| ESP | PEDIDO | RESORTE DE GAS | KIT DE REPARACION | BRIDA | ADAPTADOR DE CARGA |
| POR | PEDIDO | CILINDRO DE GÁS | KIT DE MANUTENÇÃO | FLANGE | ADAPTADOR DE CARGA |

AZOL GAS

# AS THREADED

| MODEL | $F_0$ | Ø | S | L1 | Pmax | Charge Port | | |
|---|---|---|---|---|---|---|---|---|
| AS 200 | 200 | M28x1.5 | 10 - 125 | 62 - 292 | 180 | M6 | ✗ | ✓ |
| AS 300 | 300 | M38x1.5 | 12.7 - 100 | 75.4 - 250 | 150 | M6 | ✗ | ✓ |
| AS 500 V1 | 500 | M38x1.5 | 10 - 125 | 50 - 280 | 150 | M6 | ✗ | ✓ |
| AS 600 V1 | 600 | M38x1.5 | 15 - 100 | 85 - 260 | 150 | M8 | ✗ | ✓ |
| AS 700 V1 | 700 | M45x1.5 | 10 - 125 | 52 - 282 | 150 | M6 | ✗ | ✓ |
| AS 1000 | 1000 | M50x1.5 | 10 - 125 | 58 - 288 | 160 | M6 | ✗ | ✓ |
| ASP 250 | 250 | M36x1 | 15 - 100 | 84 - 254 | 150 | M6 | ✗ | ✓ |
| ASP 300 | 300 | M38x1.5 | 12.7 - 100 | 75.4 - 250 | 150 | M6 | ✗ | ✓ |
| ASP 500 V1 | 500 | M45x1 | 15 - 100 | 84 - 254 | 150 | M6 | ✗ | ✓ |
| AST 200 V1 | 200 | Ø25 | 7 - 63 | 46 - 158 | 180 | M6 | ✗ | ✓ |
| AST 250 | 250 | Ø38 | 12.7 - 100 | 75.4 - 250 | 150 | M6 | ✗ | ✓ |
| AST 300 V1 | 300 | Ø32 | 7 - 80 | 53 - 199 | 150 | M6 | ✗ | ✓ |
| AST 1000 | 1000 | Ø50 | 13 - 125 | 64 - 288 | 150 | M6 | ✗ | ✓ |

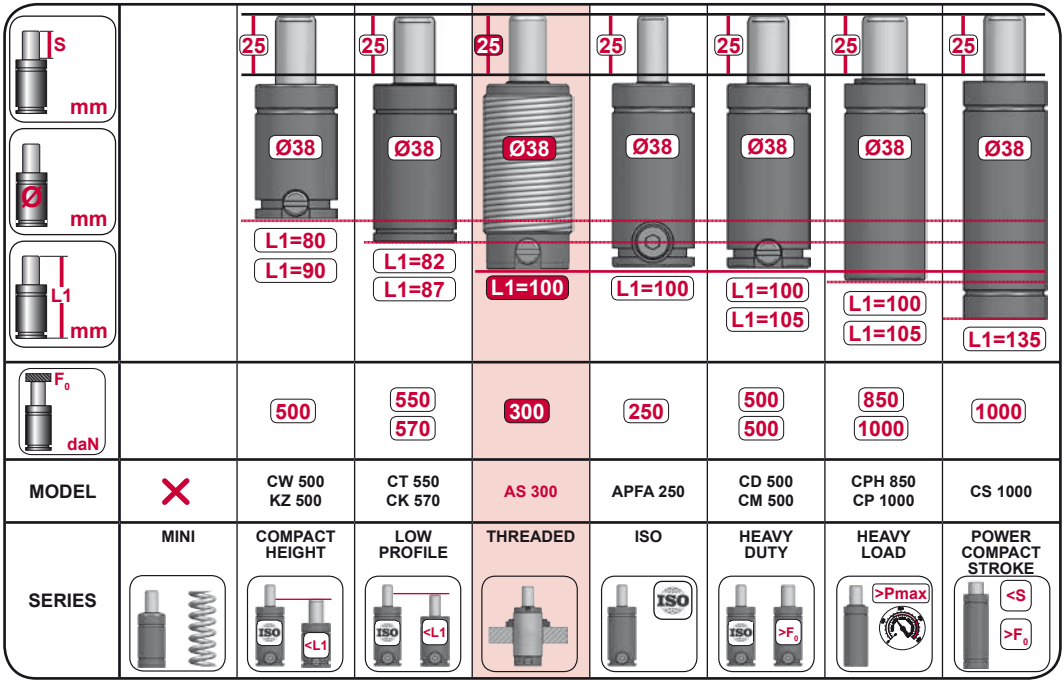

# AS 200

*Threaded*

AZOL GAS

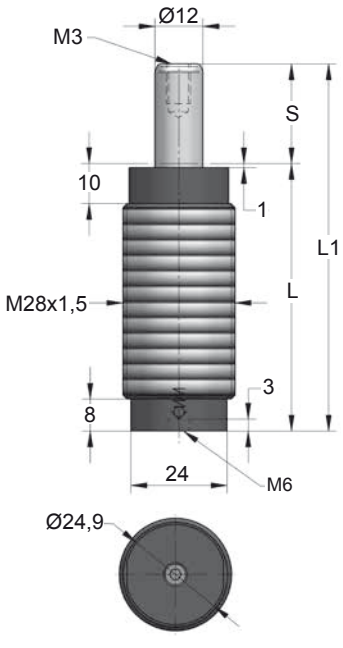


| CODE | S (mm) | L1 ±0,25 (mm) | L (mm) | Kg. |
|---|---|---|---|---|
| AS ___ 010 | 10 | 62 | 52 | 0.27 |
| AS ___ 012 | 12.7 | 67.5 | 54.7 | 0.28 |
| AS ___ 016 | 16 | 74 | 58 | 0.29 |
| AS ___ 025 | 25 | 92 | 67 | 0.32 |
| AS ___ 038 | 38 | 118 | 80 | 0.36 |
| AS ___ 050 | 50 | 142 | 92 | 0.40 |
| AS ___ 063 | 63.5 | 169 | 105.5 | 0.45 |
| AS ___ 080 | 80 | 202 | 122 | 0.50 |
| AS ___ 100 | 100 | 242 | 142 | 0.57 |
| AS ___ 125 | 125 | 292 | 167 | 0.65 |

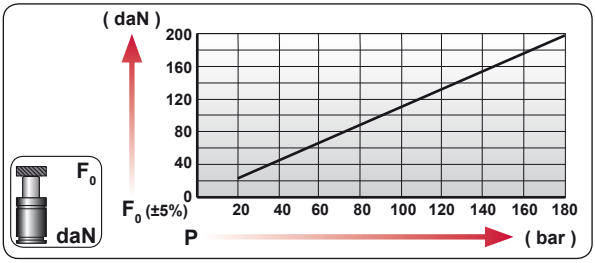


| CODE | COLOR | bar | psi | $F_0$ daN | $F_1$ daN |
|---|---|---|---|---|---|
| AS 50 050 | Green | 45 | 650 | 50 | 75 |
| AS 100 050 | Blue | 90 | 1305 | 100 | 150 |
| AS 150 050 | Red | 135 | 1960 | 150 | 225 |
| AS 200 050 | Yellow | 180 | 2610 | 200 | 300 |

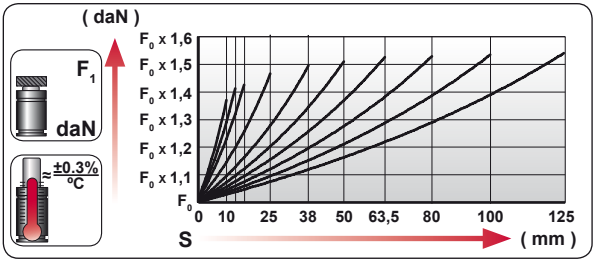


| | |
|---|---|
| ENG | ORDER |
| DEU | BESTELLUNG |
| FRA | COMMANDE |
| ITA | ORDINE |
| ESP | PEDIDO |
| POR | PEDIDO |

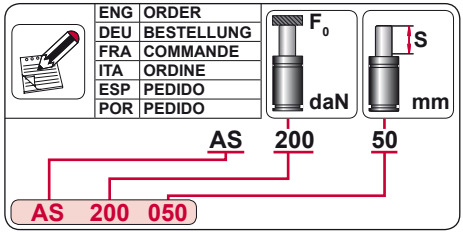


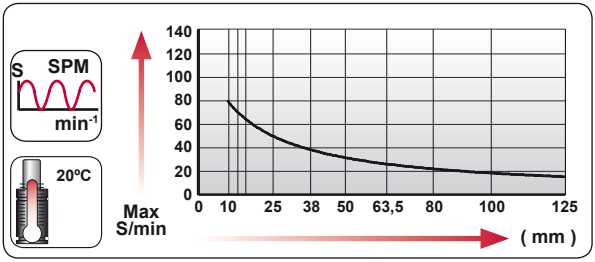


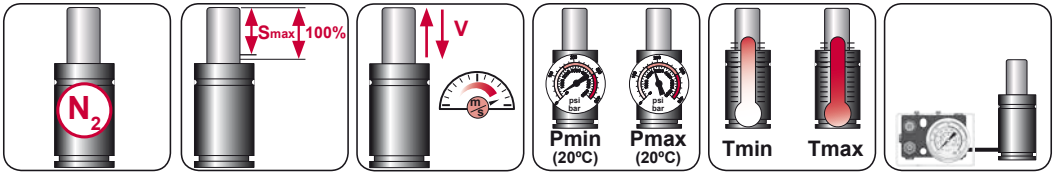


| $N_2$ | Smax < 90% | Vmax 1,6 m/s | bar psi 20 290 | bar psi 180 2610 | °C °F 0 32 | °C °F 80 176 |
|---|---|---|---|---|---|---|

AZOL GAS

# AS 200 MOUNTS

*Threaded*

## E58-028

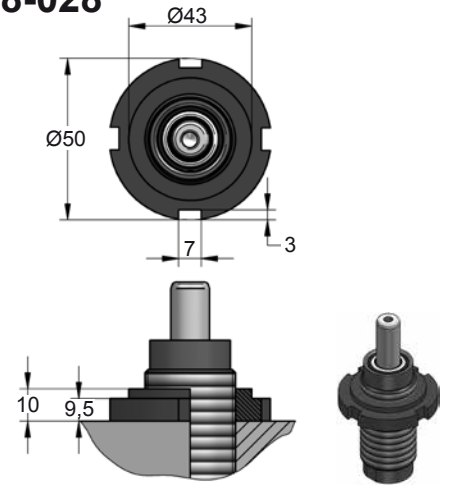




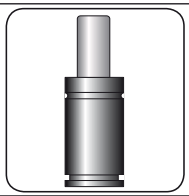




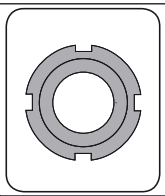

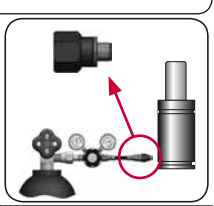

| CODE | | AS 200 050 | KIT XXXXXXX-S<br>KIT XXXXXXX-C | E28-028 | 06 GA 11 |
|---|---|---|---|---|---|
| ENG | ORDER | GAS SPRING | REPAIR KIT | FLANGE | CHARGING ADAPTER |
| DEU | BESTELLUNG | GASDRUCKFEDER | ERSATZTEILSATZ | FLANSCHE | LADEADAPTER |
| FRA | COMMANDE | RESSORT À GAZ | KIT DE RÉPARATION | BRIDE | RACCORD DE CHARGE |
| ITA | ORDINE | CILINDRO AD AZOTO | KIT DI MANUTENZIONE | FLANGE | ADATTATORE DI CARICO |
| ESP | PEDIDO | RESORTE DE GAS | KIT DE REPARACION | BRIDA | ADAPTADOR DE CARGA |
| POR | PEDIDO | CILINDRO DE GÁS | KIT DE MANUTENÇÃO | FLANGE | ADAPTADOR DE CARGA |

# AS 300

*Threaded*

AZOL GAS

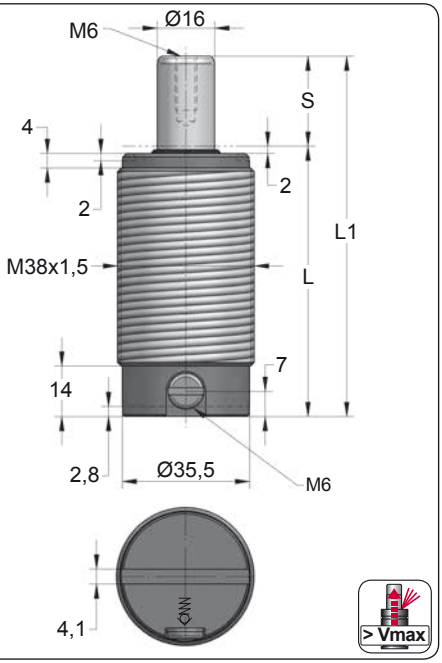


| ORDER | S (mm) | L1 ±0,25 (mm) | L (mm) | Kg. |
|---|---|---|---|---|
| AS 300 012 | 12.7 | 75.4 | 62.7 | 0.45 |
| AS 300 025 | 25 | 100 | 75 | 0.51 |
| AS 300 038 | 38 | 126 | 88 | 0.59 |
| AS 300 050 | 50 | 150 | 100 | 0.65 |
| AS 300 063 | 63.5 | 177 | 113.5 | 0.73 |
| AS 300 080 | 80 | 210 | 130 | 0.82 |
| AS 300 100 | 100 | 250 | 150 | 0.89 |

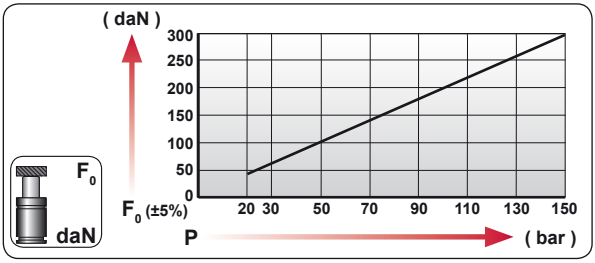


| CODE | bar | psi | $F_0$ daN | $F_1$ daN |
|---|---|---|---|---|
| AS 300 050 | 150 | 2175 | 300 | 430 |
| --------- | --- | --- | --- | --- |

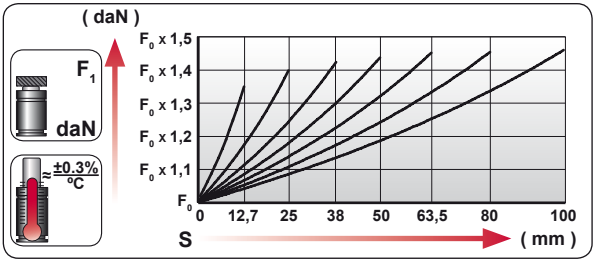


| ENG | ORDER |
|---|---|
| DEU | BESTELLUNG |
| FRA | COMMANDE |
| ITA | ORDINE |
| ESP | PEDIDO |
| POR | PEDIDO |

$F_0$ daN — S mm

AS 300 050

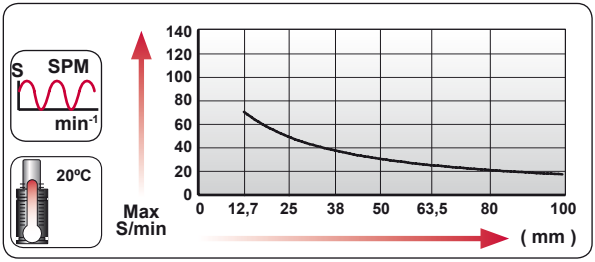


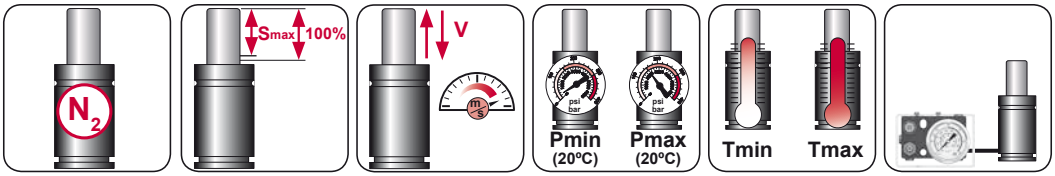


| $N_2$ | Smax < 90% | Vmax 1,6 m/s | bar psi 20 290 | bar psi 150 2175 | ºC ºF 0 32 | ºC ºF 80 176 | |
|---|---|---|---|---|---|---|---|

AZOL GAS

# AS 300 MOUNTS

*Threaded*

## E23-038

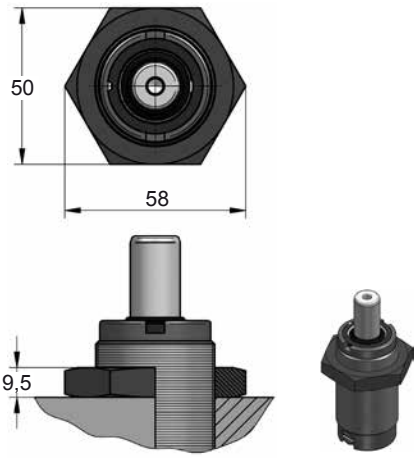


## E58-038

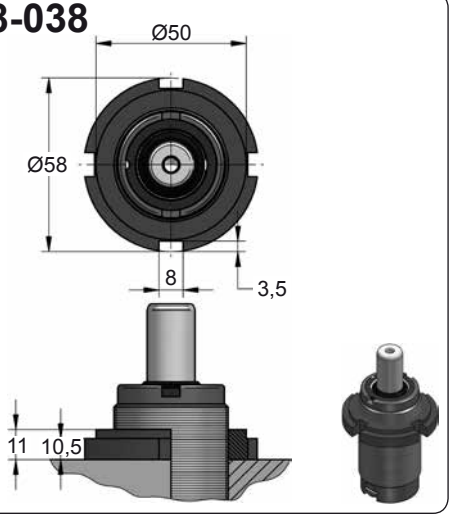


## E68-038

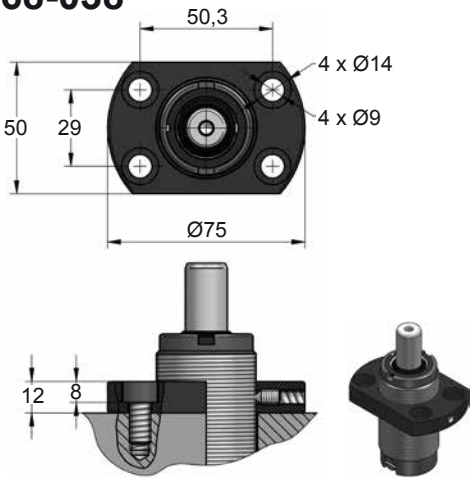









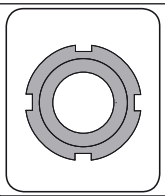

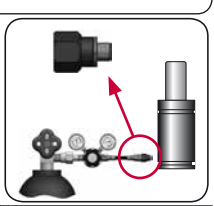

| CODE | | AS 300 050 | KIT XXXXXXX-S<br>KIT XXXXXXX-C | E58-038 | 06 GA 11 |
|---|---|---|---|---|---|
| ENG | ORDER | GAS SPRING | REPAIR KIT | FLANGE | CHARGING ADAPTER |
| DEU | BESTELLUNG | GASDRUCKFEDER | ERSATZTEILSATZ | FLANSCHE | LADEADAPTER |
| FRA | COMMANDE | RESSORT À GAZ | KIT DE RÉPARATION | BRIDE | RACCORD DE CHARGE |
| ITA | ORDINE | CILINDRO AD AZOTO | KIT DI MANUTENZIONE | FLANGE | ADATTATORE DI CARICO |
| ESP | PEDIDO | RESORTE DE GAS | KIT DE REPARACION | BRIDA | ADAPTADOR DE CARGA |
| POR | PEDIDO | CILINDRO DE GÁS | KIT DE MANUTENÇÃO | FLANGE | ADAPTADOR DE CARGA |

# AS 500

*Threaded*

AZOL GAS

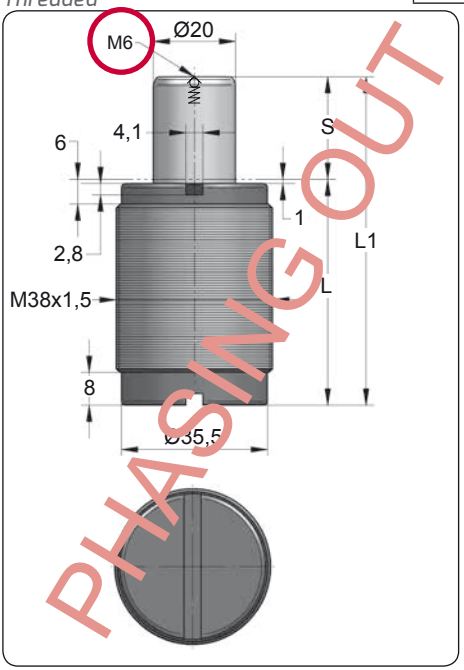


| ORDER | S (mm) | L1 ±0,25 (mm) | L (mm) | Kg. |
|---|---|---|---|---|
| AS 500 010 | 10 | 50 | 40 | 0.26 |
| AS 500 012 | 12.7 | 55.4 | 42.7 | 0.28 |
| AS 500 016 | 16 | 62 | 46 | 0.30 |
| AS 500 019 | 19 | 68 | 49 | 0.31 |
| AS 500 025 | 25 | 80 | 55 | 0.35 |
| AS 500 032 | 32 | 94 | 62 | 0.39 |
| AS 500 038 | 38 | 106 | 68 | 0.43 |
| AS 500 050 | 50 | 130 | 80 | 0.51 |
| AS 500 063 | 63.5 | 157 | 93.5 | 0.59 |
| AS 500 075 | 75 | 180 | 105 | 0.69 |
| AS 500 080 | 80 | 190 | 110 | 0.70 |
| AS 500 100 | 100 | 230 | 130 | 0.83 |
| AS 500 125 | 125 | 280 | 155 | 0.99 |

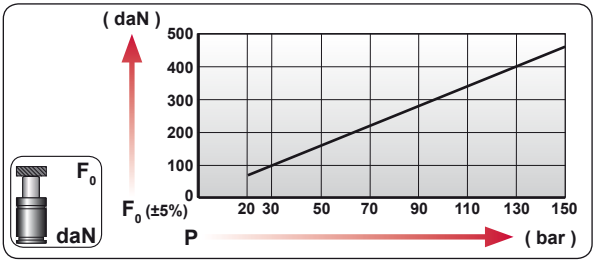


| CODE | bar | psi | F0 daN | F1 daN |
|---|---|---|---|---|
| AS 500 050 | 150 | 2175 | 470 | 790 |
| --------- | --- | --- | --- | --- |

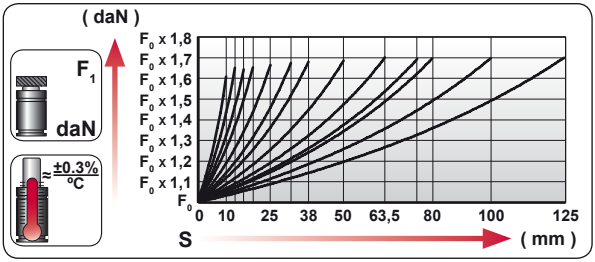


| | |
|---|---|
| ENG | ORDER |
| DEU | BESTELLUNG |
| FRA | COMMANDE |
| ITA | ORDINE |
| ESP | PEDIDO |
| POR | PEDIDO |

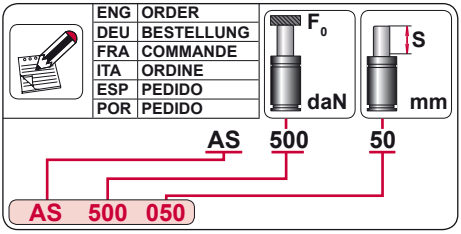


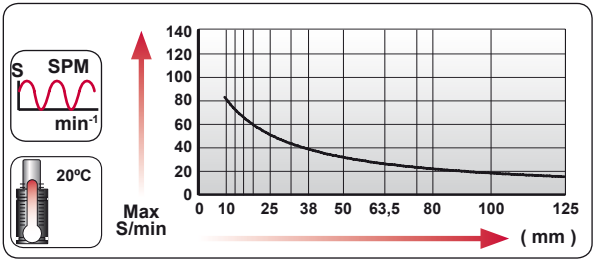


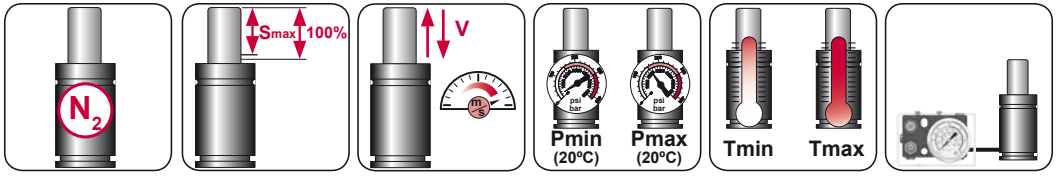


| $N_2$ | Smax < 90% | Vmax 1,6 m/s | bar psi 20 290 | bar psi 150 2175 | °C °F 0 32 | °C °F 80 176 | |
|---|---|---|---|---|---|---|---|

AZOL GAS

# AS 500 MOUNTS

*Threaded*

## E23-038

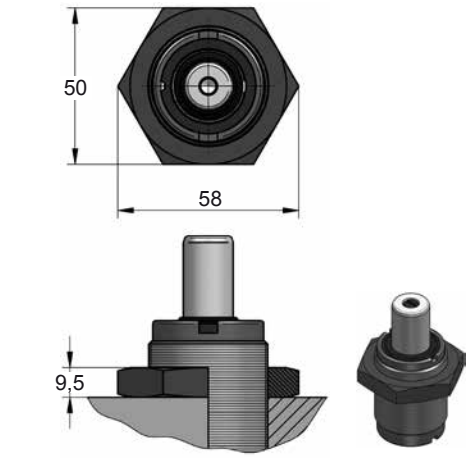


## E58-038

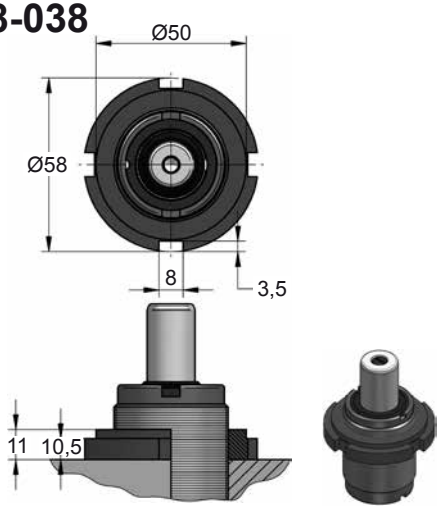


## E68-038

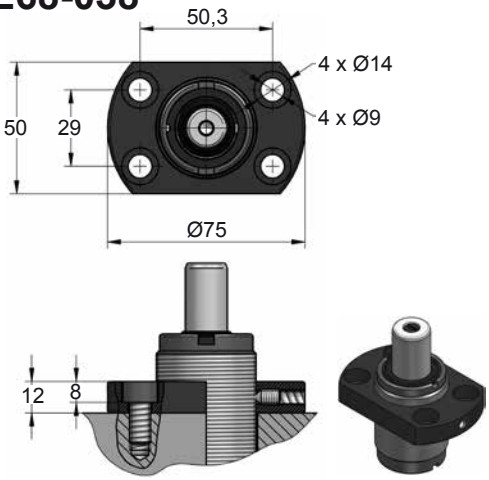









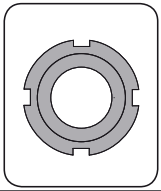

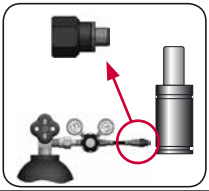

| CODE | | AS 500 050 | KIT XXXXXXX-S<br>KIT XXXXXXX-C | E58-038 | 06 GA 10 |
|---|---|---|---|---|---|
| ENG | ORDER | GAS SPRING | REPAIR KIT | FLANGE | CHARGING ADAPTER |
| DEU | BESTELLUNG | GASDRUCKFEDER | ERSATZTEILSATZ | FLANSCHE | LADEADAPTER |
| FRA | COMMANDE | RESSORT À GAZ | KIT DE RÉPARATION | BRIDE | RACCORD DE CHARGE |
| ITA | ORDINE | CILINDRO AD AZOTO | KIT DI MANUTENZIONE | FLANGE | ADATTATORE DI CARICO |
| ESP | PEDIDO | RESORTE DE GAS | KIT DE REPARACION | BRIDA | ADAPTADOR DE CARGA |
| POR | PEDIDO | CILINDRO DE GÁS | KIT DE MANUTENÇÃO | FLANGE | ADAPTADOR DE CARGA |

# AS 500 V1

*Threaded*

AZOL GAS

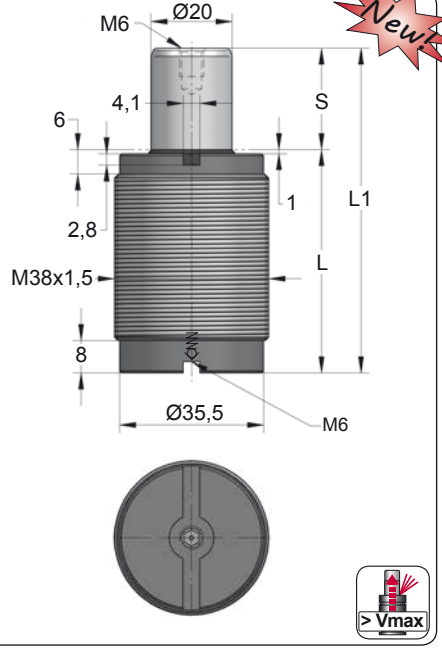


Newt

| ORDER | S (mm) | L1 ±0,25 (mm) | L (mm) | Kg. |
|---|---|---|---|---|
| AS 500 010 V1 | 10 | 50 | 40 | 0.26 |
| AS 500 012 V1 | 12.7 | 55.4 | 42.7 | 0.28 |
| AS 500 016 V1 | 16 | 62 | 46 | 0.30 |
| AS 500 019 V1 | 19 | 68 | 49 | 0.31 |
| AS 500 025 V1 | 25 | 80 | 55 | 0.35 |
| AS 500 032 V1 | 32 | 94 | 62 | 0.39 |
| AS 500 038 V1 | 38 | 106 | 68 | 0.43 |
| AS 500 050 V1 | 50 | 130 | 80 | 0.51 |
| AS 500 063 V1 | 63.5 | 157 | 93.5 | 0.59 |
| AS 500 075 V1 | 75 | 180 | 105 | 0.69 |
| AS 500 080 V1 | 80 | 190 | 110 | 0.70 |
| AS 500 100 V1 | 100 | 230 | 130 | 0.83 |
| AS 500 125 V1 | 125 | 280 | 155 | 0.99 |

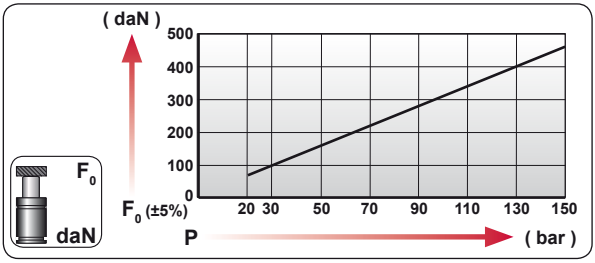


| CODE | bar | psi | F0 daN | F1 daN |
|---|---|---|---|---|
| AS 500 050 V1 | 150 | 2175 | 470 | 790 |
| --------- | --- | --- | --- | --- |

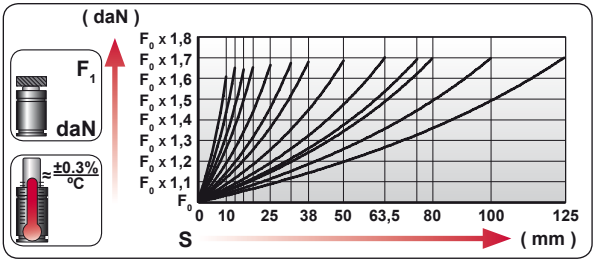


| | |
|---|---|
| ENG | ORDER |
| DEU | BESTELLUNG |
| FRA | COMMANDE |
| ITA | ORDINE |
| ESP | PEDIDO |
| POR | PEDIDO |




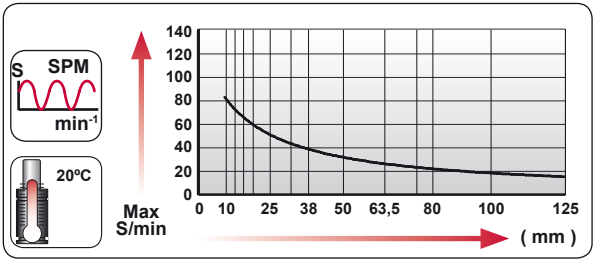


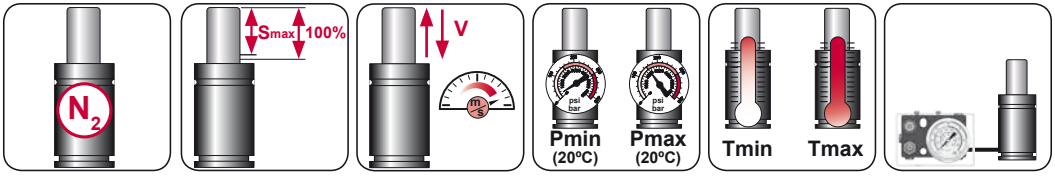


| $N_2$ | Smax < 90% | Vmax 1,6 m/s | bar psi 20 290 | bar psi 150 2175 | ºC ºF 0 32 | ºC ºF 80 176 | |
|---|---|---|---|---|---|---|---|

AZOL GAS

# AS 500 V1 MOUNTS

*Threaded*

## E23-038

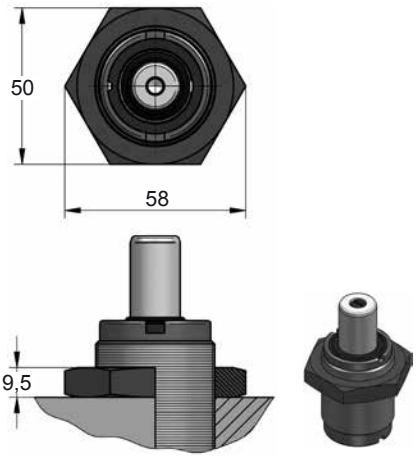


## E58-038

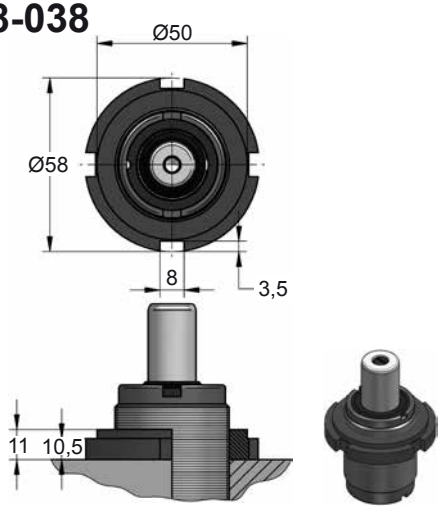


## E68-038

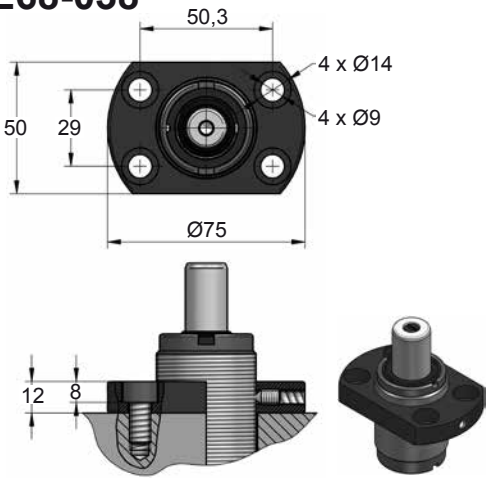









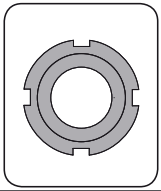

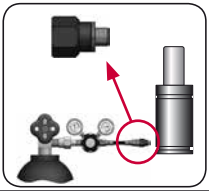

| CODE | | AS 500 050 V1 | KIT XXXXXXX-S<br>KIT XXXXXXX-C | E58-038 | 06 GA 10 |
|---|---|---|---|---|---|
| ENG | ORDER | GAS SPRING | REPAIR KIT | FLANGE | CHARGING ADAPTER |
| DEU | BESTELLUNG | GASDRUCKFEDER | ERSATZTEILSATZ | FLANSCHE | LADEADAPTER |
| FRA | COMMANDE | RESSORT À GAZ | KIT DE RÉPARATION | BRIDE | RACCORD DE CHARGE |
| ITA | ORDINE | CILINDRO AD AZOTO | KIT DI MANUTENZIONE | FLANGE | ADATTATORE DI CARICO |
| ESP | PEDIDO | RESORTE DE GAS | KIT DE REPARACION | BRIDA | ADAPTADOR DE CARGA |
| POR | PEDIDO | CILINDRO DE GÁS | KIT DE MANUTENÇÃO | FLANGE | ADAPTADOR DE CARGA |

# AS 600

*Threaded*

AZOL GAS

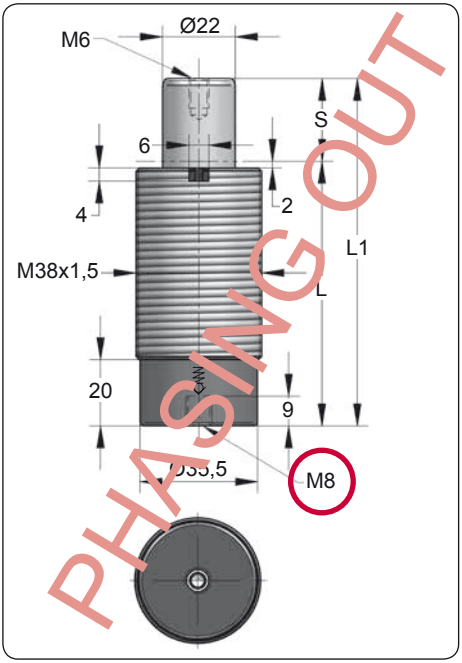


| ORDER | S (mm) | L1 ±0,25 (mm) | L (mm) | Kg. |
|---|---|---|---|---|
| AS 600 015 | 15 | 85 | 70 | 0.49 |
| AS 600 025 | 25 | 105 | 80 | 0.54 |
| AS 600 038 | 38 | 131 | 93 | 0.64 |
| AS 600 050 | 50 | 155 | 105 | 0.68 |
| AS 600 063 | 63 | 186 | 123 | 0.77 |
| AS 600 080 | 80 | 220 | 140 | 0.84 |
| AS 600 100 | 100 | 260 | 160 | 0.99 |

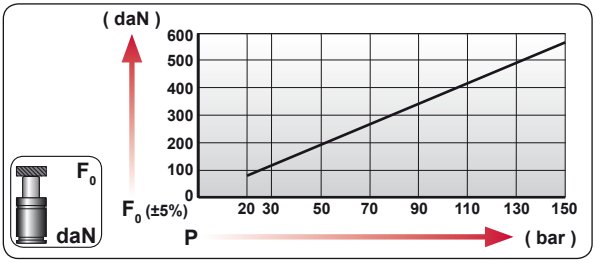


| CODE | bar | psi | F0 daN | F1 daN |
|---|---|---|---|---|
| AS 600 050 | 150 | 2175 | 570 | 985 |
| --------- | --- | --- | --- | --- |

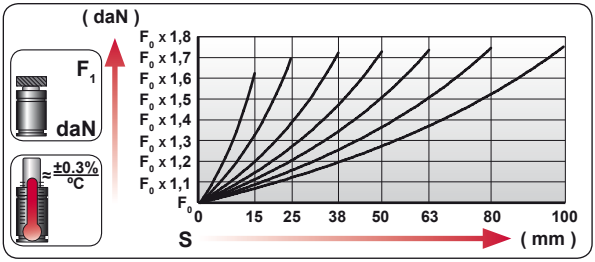


| | |
|---|---|
| ENG | ORDER |
| DEU | BESTELLUNG |
| FRA | COMMANDE |
| ITA | ORDINE |
| ESP | PEDIDO |
| POR | PEDIDO |




AS 600 50

AS 600 050

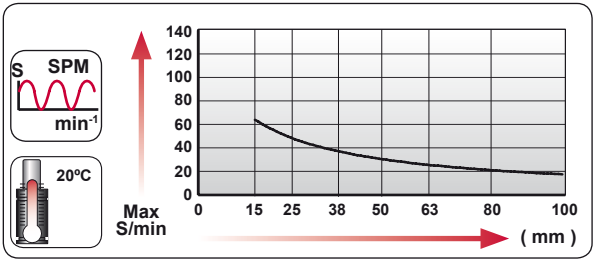


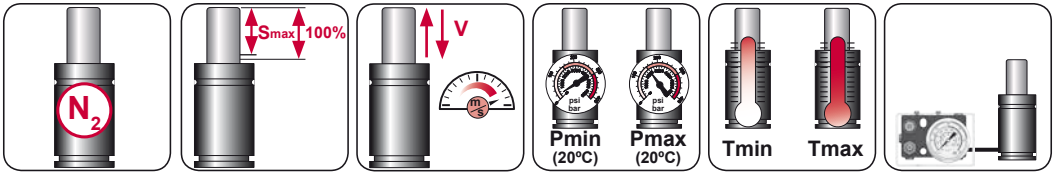


| $N_2$ | Smax < 90% | Vmax 1,6 m/s | bar psi 20 290 | bar psi 150 2175 | °C °F 0 32 | °C °F 80 176 |
|---|---|---|---|---|---|---|

AZOL GAS

# AS 600 MOUNTS

*Threaded*

## E23-038

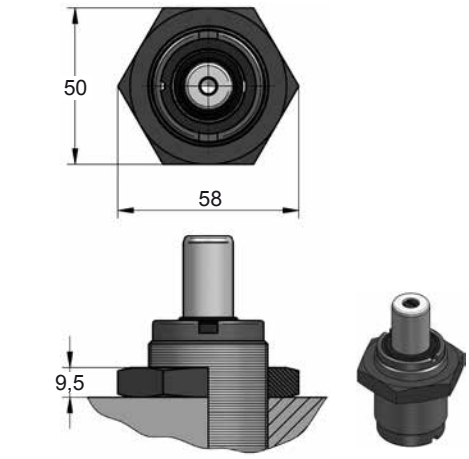


## E58-038

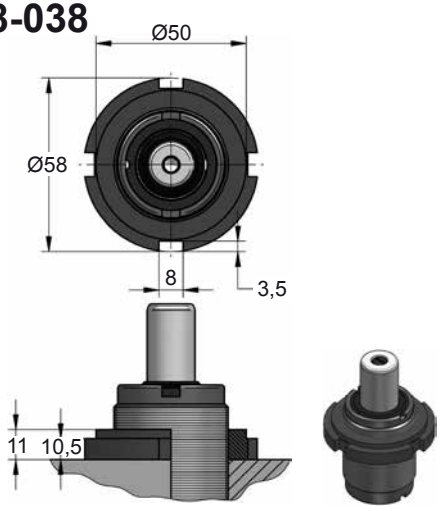


## E68-038

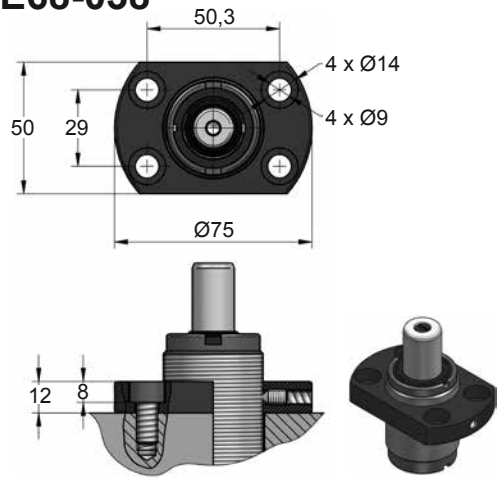









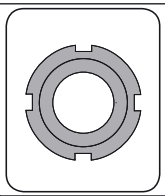

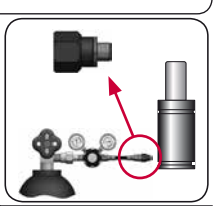

| CODE | | AS 600 050 | KIT XXXXXXX-S<br>KIT XXXXXXX-C | E58-038 | 08 GA 2 |
|---|---|---|---|---|---|
| ENG | ORDER | GAS SPRING | REPAIR KIT | FLANGE | CHARGING ADAPTER |
| DEU | BESTELLUNG | GASDRUCKFEDER | ERSATZTEILSATZ | FLANSCHE | LADEADAPTER |
| FRA | COMMANDE | RESSORT À GAZ | KIT DE RÉPARATION | BRIDE | RACCORD DE CHARGE |
| ITA | ORDINE | CILINDRO AD AZOTO | KIT DI MANUTENZIONE | FLANGE | ADATTATORE DI CARICO |
| ESP | PEDIDO | RESORTE DE GAS | KIT DE REPARACION | BRIDA | ADAPTADOR DE CARGA |
| POR | PEDIDO | CILINDRO DE GÁS | KIT DE MANUTENÇÃO | FLANGE | ADAPTADOR DE CARGA |

# AS 600 V1

*Threaded*

AZOL GAS

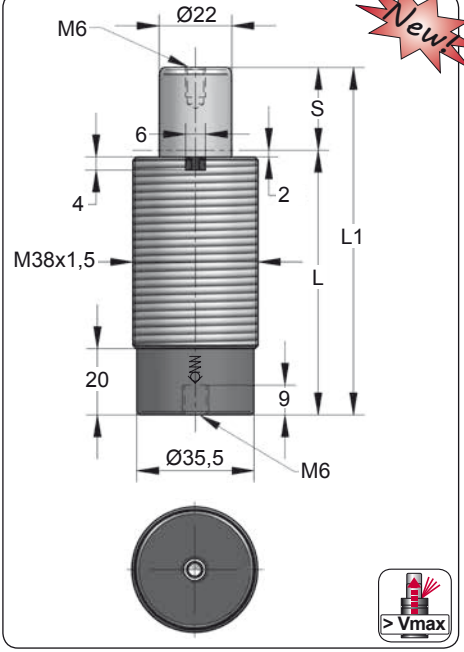


Newt

| ORDER | S (mm) | L1 ±0,25 (mm) | L (mm) | Kg. |
|---|---|---|---|---|
| AS 600 015 V1 | 15 | 85 | 70 | 0.49 |
| AS 600 025 V1 | 25 | 105 | 80 | 0.54 |
| AS 600 038 V1 | 38 | 131 | 93 | 0.64 |
| AS 600 050 V1 | 50 | 155 | 105 | 0.68 |
| AS 600 063 V1 | 63 | 186 | 123 | 0.77 |
| AS 600 080 V1 | 80 | 220 | 140 | 0.84 |
| AS 600 100 V1 | 100 | 260 | 160 | 0.99 |

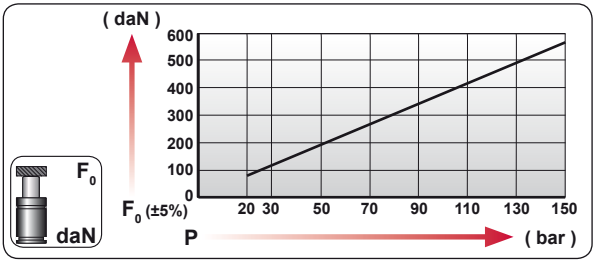


| CODE | bar | psi | F0 daN | F1 daN |
|---|---|---|---|---|
| AS 600 050 V1 | 150 | 2175 | 570 | 985 |
| --------- | --- | --- | --- | --- |

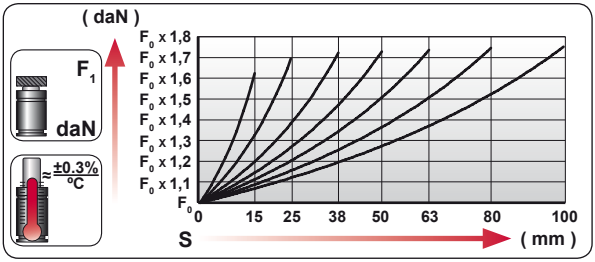


| | |
|---|---|
| ENG | ORDER |
| DEU | BESTELLUNG |
| FRA | COMMANDE |
| ITA | ORDINE |
| ESP | PEDIDO |
| POR | PEDIDO |




AS 600 50

AS 600 050 V1

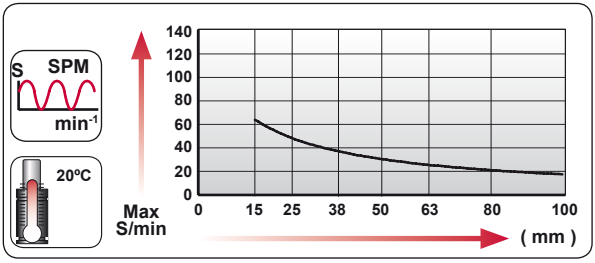


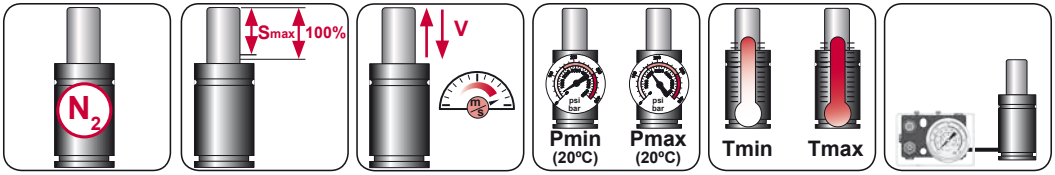


| $N_2$ | Smax < 90% | Vmax 1,6 m/s | bar psi 20 290 | bar psi 150 2175 | °C °F 0 32 | °C °F 80 176 |
|---|---|---|---|---|---|---|

AZOL GAS

# AS 600 V1 *MOUNTS*

*Threaded*

## E23-038

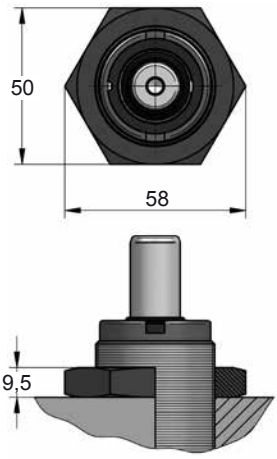


## E58-038

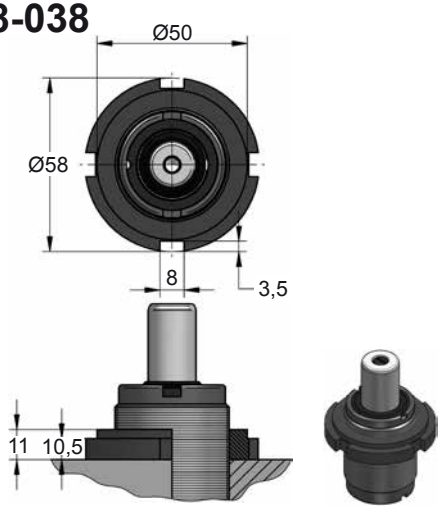


## E68-038

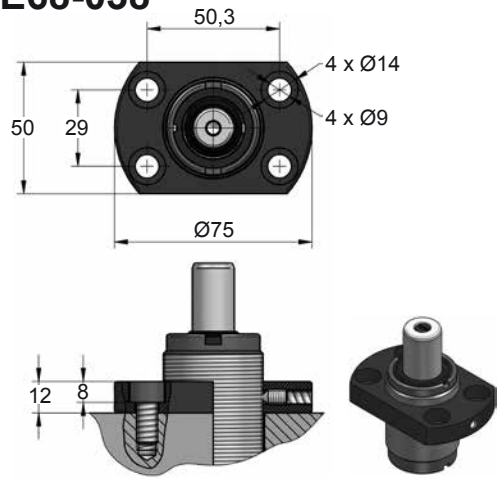









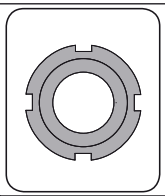

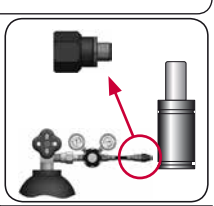

| CODE | | AS 600 050 V1 | KIT XXXXXXX-S<br>KIT XXXXXXX-C | E58-038 | 06 GA 11 |
|---|---|---|---|---|---|
| ENG | ORDER | GAS SPRING | REPAIR KIT | FLANGE | CHARGING ADAPTER |
| DEU | BESTELLUNG | GASDRUCKFEDER | ERSATZTEILSATZ | FLANSCHE | LADEADAPTER |
| FRA | COMMANDE | RESSORT À GAZ | KIT DE RÉPARATION | BRIDE | RACCORD DE CHARGE |
| ITA | ORDINE | CILINDRO AD AZOTO | KIT DI MANUTENZIONE | FLANGE | ADATTATORE DI CARICO |
| ESP | PEDIDO | RESORTE DE GAS | KIT DE REPARACION | BRIDA | ADAPTADOR DE CARGA |
| POR | PEDIDO | CILINDRO DE GÁS | KIT DE MANUTENÇÃO | FLANGE | ADAPTADOR DE CARGA |

# AS 700

*Threaded*

AZOL GAS

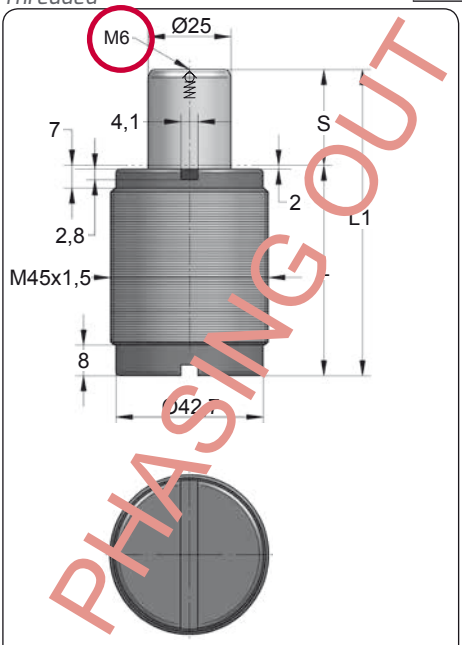


| ORDER | S (mm) | L1 ±0,25 (mm) | L (mm) | Kg. |
|---|---|---|---|---|
| AS 700 010 | 10 | 52 | 42 | 0.37 |
| AS 700 012 | 12.7 | 57.4 | 44.7 | 0.39 |
| AS 700 016 | 16 | 64 | 48 | 0.41 |
| AS 700 019 | 19 | 70 | 51 | 0.43 |
| AS 700 025 | 25 | 82 | 57 | 0.48 |
| AS 700 032 | 32 | 96 | 64 | 0.52 |
| AS 700 038 | 38 | 108 | 70 | 0.56 |
| AS 700 050 | 50 | 132 | 82 | 0.65 |
| AS 700 063 | 63.5 | 159 | 95.5 | 0.74 |
| AS 700 075 | 75 | 182 | 107 | 0.82 |
| AS 700 080 | 80 | 192 | 112 | 0.85 |
| AS 700 100 | 100 | 232 | 132 | 0.99 |
| AS 700 125 | 125 | 282 | 157 | 1.16 |

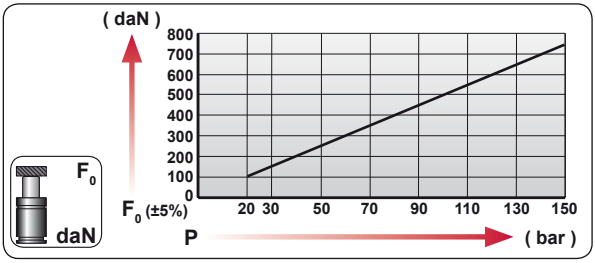


| CODE | bar | psi | $F_0$ daN | $F_1$ daN |
|---|---|---|---|---|
| AS 700 050 | 150 | 2175 | 740 | 1220 |
| --------- | --- | --- | --- | --- |

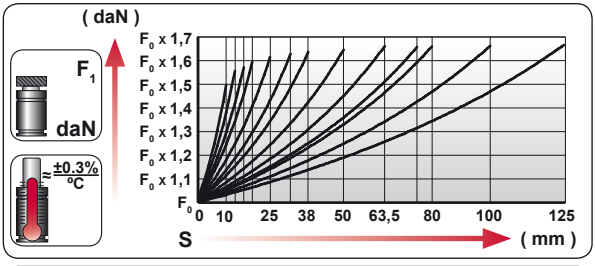


| ENG | ORDER |
|---|---|
| DEU | BESTELLUNG |
| FRA | COMMANDE |
| ITA | ORDINE |
| ESP | PEDIDO |
| POR | PEDIDO |

$F_0$ daN — S mm

AS 700 50

AS 700 050

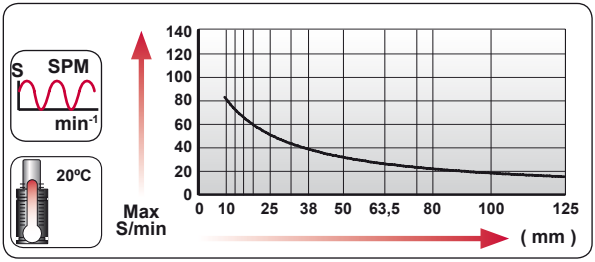


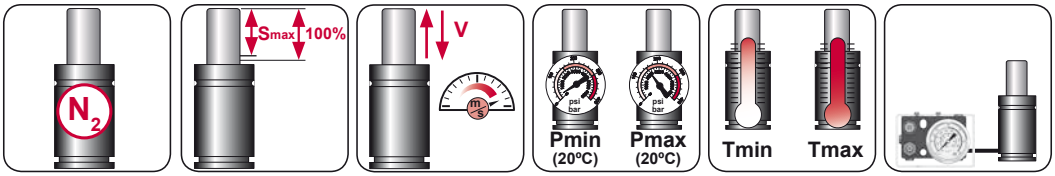


| $N_2$ | Smax < 90% | Vmax 1,6 m/s | bar psi 20 290 | bar psi 150 2175 | ºC ºF 0 32 | ºC ºF 80 176 | |
|---|---|---|---|---|---|---|---|

AZOL GAS

# AS 700 MOUNTS

*Threaded*

## E58-045

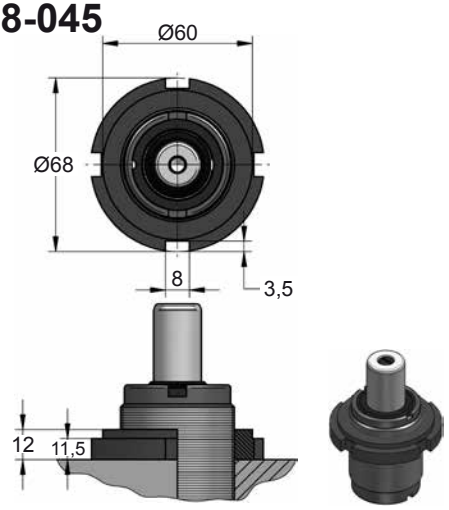




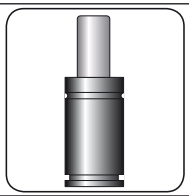




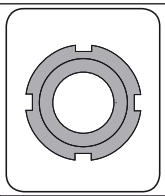

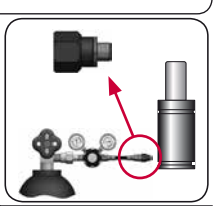

| CODE | | AS 700 050 | KIT XXXXXXX-S<br>KIT XXXXXXX-C | E58-045 | 06 GA 11 |
|---|---|---|---|---|---|
| ENG | ORDER | GAS SPRING | REPAIR KIT | FLANGE | CHARGING ADAPTER |
| DEU | BESTELLUNG | GASDRUCKFEDER | ERSATZTEILSATZ | FLANSCHE | LADEADAPTER |
| FRA | COMMANDE | RESSORT À GAZ | KIT DE RÉPARATION | BRIDE | RACCORD DE CHARGE |
| ITA | ORDINE | CILINDRO AD AZOTO | KIT DI MANUTENZIONE | FLANGE | ADATTATORE DI CARICO |
| ESP | PEDIDO | RESORTE DE GAS | KIT DE REPARACION | BRIDA | ADAPTADOR DE CARGA |
| POR | PEDIDO | CILINDRO DE GÁS | KIT DE MANUTENÇÃO | FLANGE | ADAPTADOR DE CARGA |

# AS 700 V1

*Threaded*

AZOL GAS

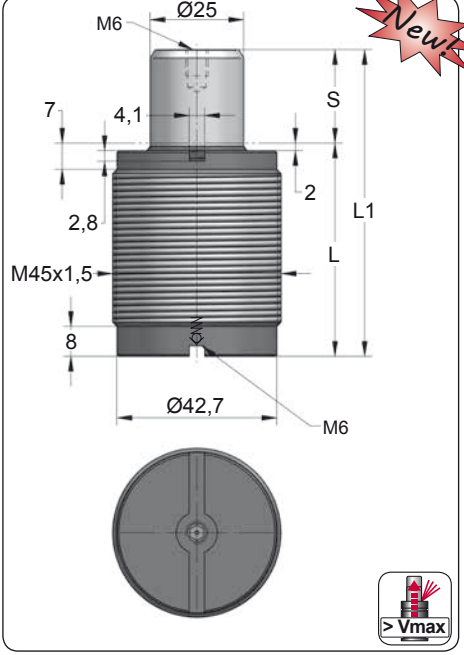


| ORDER | S (mm) | L1 ±0,25 (mm) | L (mm) | Kg. |
|---|---|---|---|---|
| AS 700 010 V1 | 10 | 52 | 42 | 0.37 |
| AS 700 012 V1 | 12.7 | 57.4 | 44.7 | 0.39 |
| AS 700 016 V1 | 16 | 64 | 48 | 0.41 |
| AS 700 019 V1 | 19 | 70 | 51 | 0.43 |
| AS 700 025 V1 | 25 | 82 | 57 | 0.48 |
| AS 700 032 V1 | 32 | 96 | 64 | 0.52 |
| AS 700 038 V1 | 38 | 108 | 70 | 0.56 |
| AS 700 050 V1 | 50 | 132 | 82 | 0.65 |
| AS 700 063 V1 | 63.5 | 159 | 95.5 | 0.74 |
| AS 700 075 V1 | 75 | 182 | 107 | 0.82 |
| AS 700 080 V1 | 80 | 192 | 112 | 0.85 |
| AS 700 100 V1 | 100 | 232 | 132 | 0.99 |
| AS 700 125 V1 | 125 | 282 | 157 | 1.16 |

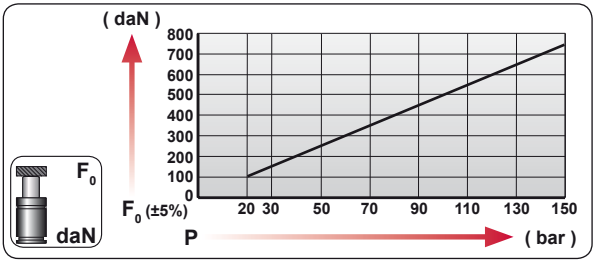


| CODE | bar | psi | $F_0$ daN | $F_1$ daN |
|---|---|---|---|---|
| AS 700 050 V1 | 150 | 2175 | 740 | 1220 |
| --------- | --- | --- | --- | --- |

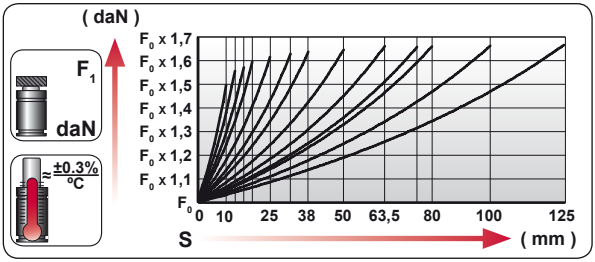


| ENG | ORDER |
|---|---|
| DEU | BESTELLUNG |
| FRA | COMMANDE |
| ITA | ORDINE |
| ESP | PEDIDO |
| POR | PEDIDO |

$F_0$ daN — S mm

AS 700 50

AS 700 050 V1

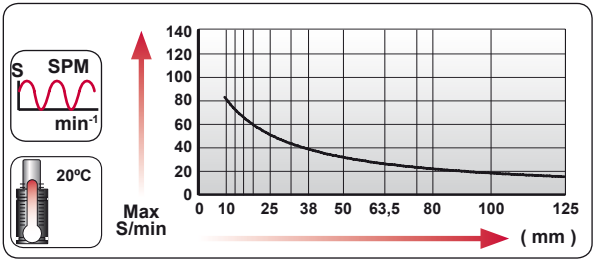


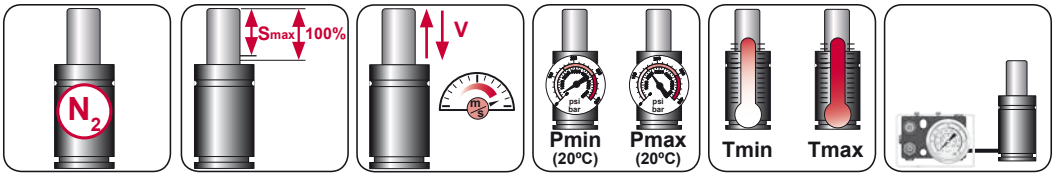


| $N_2$ | Smax < 90% | Vmax 1,6 m/s | bar psi 20 290 | bar psi 150 2175 | ºC ºF 0 32 | ºC ºF 80 176 | |
|---|---|---|---|---|---|---|---|

AZOL GAS

# AS 700 V1 *MOUNTS*

*Threaded*

## E58-045

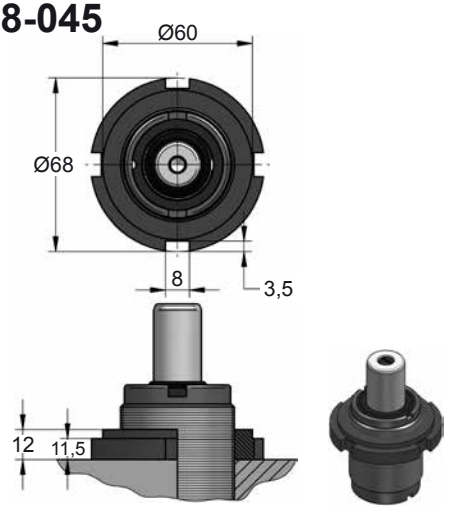




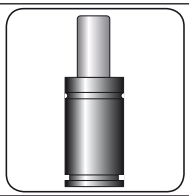




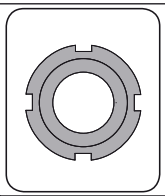

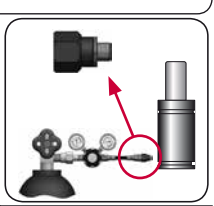

| CODE | | AS 700 050 V1 | KIT XXXXXXX-S<br>KIT XXXXXXX-C | E58-045 | 06 GA 11 |
|---|---|---|---|---|---|
| ENG | ORDER | GAS SPRING | REPAIR KIT | FLANGE | CHARGING ADAPTER |
| DEU | BESTELLUNG | GASDRUCKFEDER | ERSATZTEILSATZ | FLANSCHE | LADEADAPTER |
| FRA | COMMANDE | RESSORT À GAZ | KIT DE RÉPARATION | BRIDE | RACCORD DE CHARGE |
| ITA | ORDINE | CILINDRO AD AZOTO | KIT DI MANUTENZIONE | FLANGE | ADATTATORE DI CARICO |
| ESP | PEDIDO | RESORTE DE GAS | KIT DE REPARACION | BRIDA | ADAPTADOR DE CARGA |
| POR | PEDIDO | CILINDRO DE GÁS | KIT DE MANUTENÇÃO | FLANGE | ADAPTADOR DE CARGA |

# AS 1000

*Threaded*

AZOL GAS

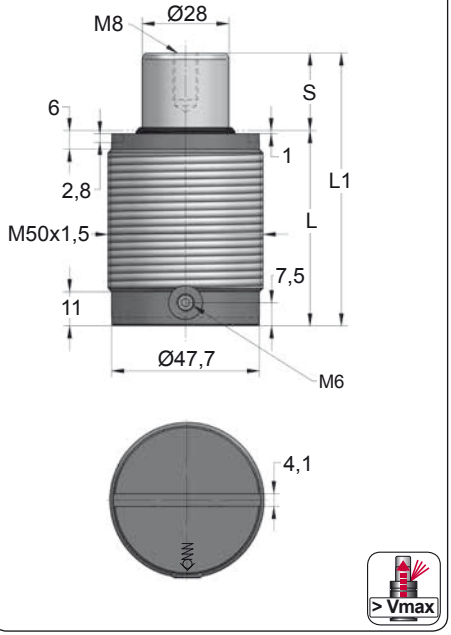


| ORDER | S (mm) | L1 ±0,25 (mm) | L (mm) | Kg. |
|---|---|---|---|---|
| AS 1000 010 | 10 | 58 | 48 | 0.56 |
| AS 1000 012 | 12.7 | 63.4 | 50.7 | 0.59 |
| AS 1000 016 | 16 | 70 | 54 | 0.62 |
| AS 1000 019 | 19 | 76 | 57 | 0.65 |
| AS 1000 025 | 25 | 88 | 63 | 0.71 |
| AS 1000 032 | 32 | 102 | 70 | 0.77 |
| AS 1000 038 | 38 | 114 | 76 | 0.83 |
| AS 1000 050 | 50 | 138 | 88 | 0.94 |
| AS 1000 063 | 63.5 | 165 | 101.5 | 1.07 |
| AS 1000 075 | 75 | 188 | 113 | 1.18 |
| AS 1000 080 | 80 | 198 | 118 | 1.23 |
| AS 1000 100 | 100 | 238 | 138 | 1.42 |
| AS 1000 125 | 125 | 288 | 163 | 1.66 |

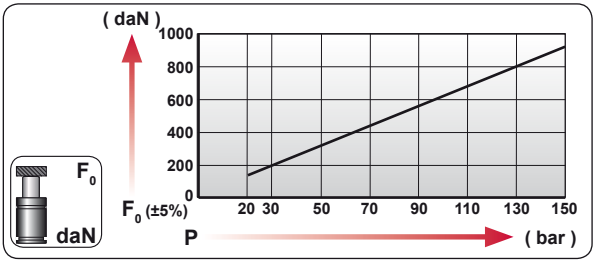


| CODE | bar | psi | $F_0$ daN | $F_1$ daN |
|---|---|---|---|---|
| AS 1000 050 | 160 | 2320 | 985 | 1755 |
| --------- | --- | --- | --- | --- |

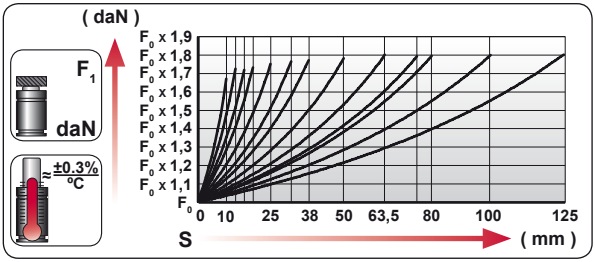


| | |
|---|---|
| ENG | ORDER |
| DEU | BESTELLUNG |
| FRA | COMMANDE |
| ITA | ORDINE |
| ESP | PEDIDO |
| POR | PEDIDO |




AS 1000 50

AS 1000 050

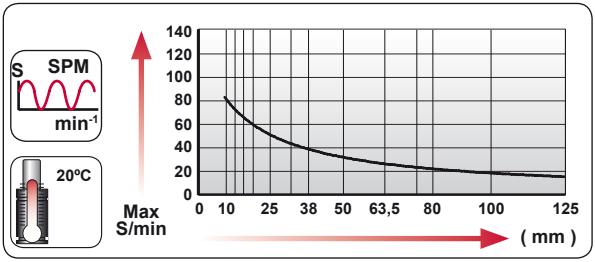


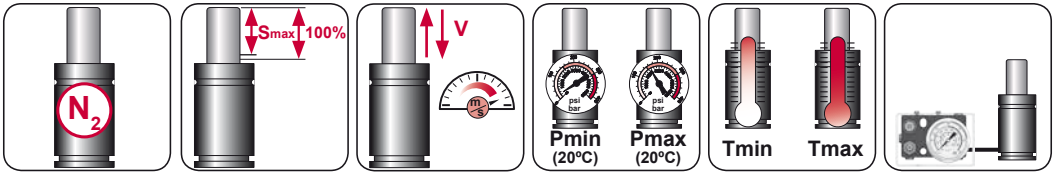


| $N_2$ | Smax < 90% | Vmax 1,6 m/s | bar psi 20 290 | bar psi 160 2320 | ºC ºF 0 32 | ºC ºF 80 176 |
|---|---|---|---|---|---|---|

AZOL GAS

# AS 1000 MOUNTS

*Threaded*

## E58-050

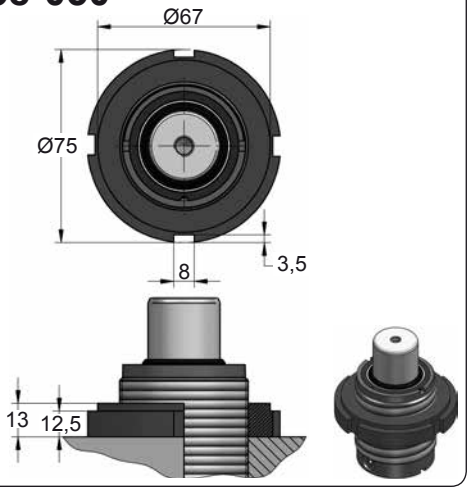









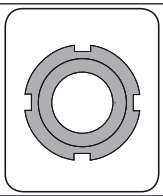

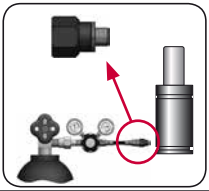

| CODE | | AS 1000 050 | KIT XXXXXXX-S<br>KIT XXXXXXX-C | E58-050 | 06 GA 11 |
|---|---|---|---|---|---|
| ENG | ORDER | GAS SPRING | REPAIR KIT | FLANGE | CHARGING ADAPTER |
| DEU | BESTELLUNG | GASDRUCKFEDER | ERSATZTEILSATZ | FLANSCHE | LADEADAPTER |
| FRA | COMMANDE | RESSORT À GAZ | KIT DE RÉPARATION | BRIDE | RACCORD DE CHARGE |
| ITA | ORDINE | CILINDRO AD AZOTO | KIT DI MANUTENZIONE | FLANGE | ADATTATORE DI CARICO |
| ESP | PEDIDO | RESORTE DE GAS | KIT DE REPARACION | BRIDA | ADAPTADOR DE CARGA |
| POR | PEDIDO | CILINDRO DE GÁS | KIT DE MANUTENÇÃO | FLANGE | ADAPTADOR DE CARGA |

# ASP 250

*Threaded*

AZOL GAS

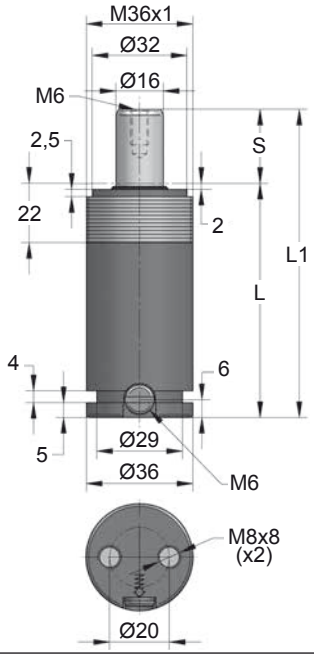


| ORDER | S (mm) | L1 ±0,25 (mm) | L (mm) | Kg. |
|---|---|---|---|---|
| ASP 250 015 | 15 | 84 | 69 | 0.40 |
| ASP 250 025 | 25 | 104 | 79 | 0.45 |
| ASP 250 038 | 38 | 130 | 92 | 0.51 |
| ASP 250 050 | 50 | 154 | 104 | 0.56 |
| ASP 250 063 | 63.5 | 181 | 117.5 | 0.62 |
| ASP 250 080 | 80 | 214 | 134 | 0.73 |
| ASP 250 100 | 100 | 254 | 154 | 0.80 |

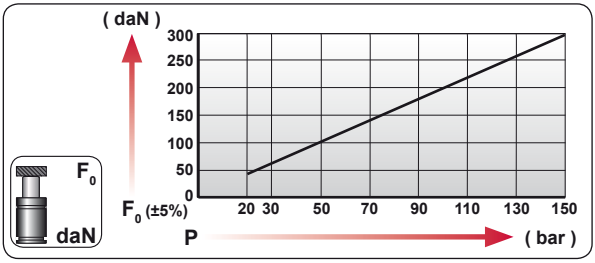


| CODE | | bar | psi | F0 daN | F1 daN |
|---|---|---|---|---|---|
| ASP 250 050 | | 125 | 1810 | 250 | 360 |
| --------- | | --- | --- | --- | --- |

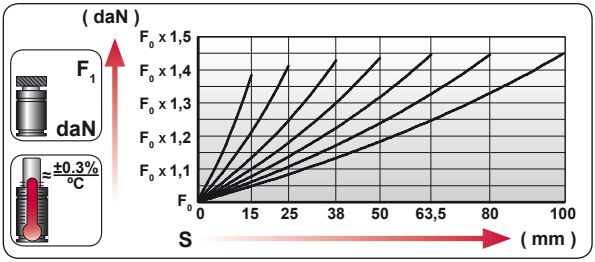


| | |
|---|---|
| ENG | ORDER |
| DEU | BESTELLUNG |
| FRA | COMMANDE |
| ITA | ORDINE |
| ESP | PEDIDO |
| POR | PEDIDO |

F0 daN — S mm

ASP 250 50

ASP 250 050

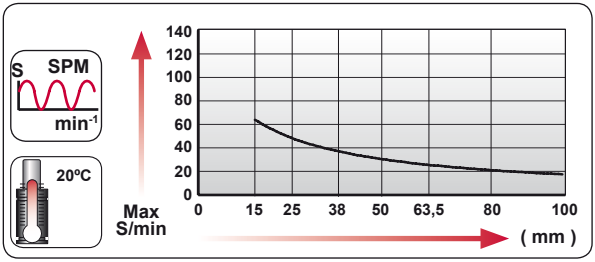


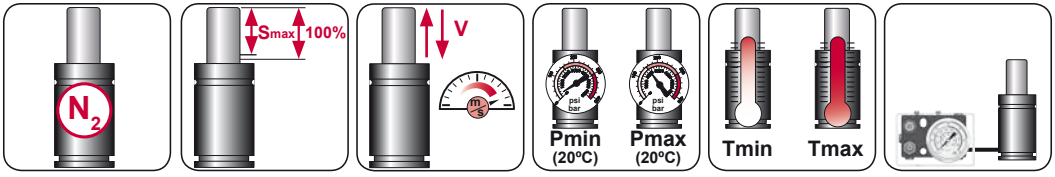


| $N_2$ | Smax < 90% | Vmax 1,6 m/s | bar psi 20 290 | bar psi 150 2175 | ºC ºF 0 32 | ºC ºF 80 176 |
|---|---|---|---|---|---|---|

AZOL GAS

# ASP 250 MOUNTS

*Threaded*

## E03-036

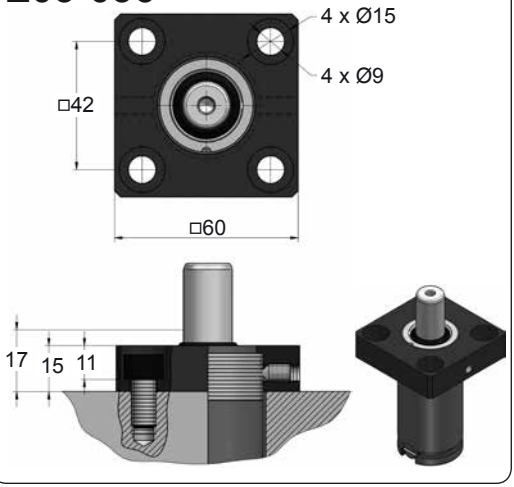









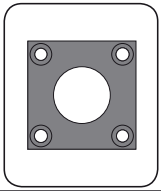

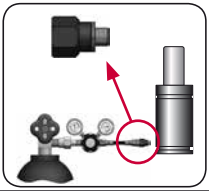

| CODE | | ASP 250 050 | KIT XXXXXXX-S<br>KIT XXXXXXX-C | E03-036 | 06 GA 11 |
|---|---|---|---|---|---|
| ENG | ORDER | GAS SPRING | REPAIR KIT | FLANGE | CHARGING ADAPTER |
| DEU | BESTELLUNG | GASDRUCKFEDER | ERSATZTEILSATZ | FLANSCHE | LADEADAPTER |
| FRA | COMMANDE | RESSORT À GAZ | KIT DE RÉPARATION | BRIDE | RACCORD DE CHARGE |
| ITA | ORDINE | CILINDRO AD AZOTO | KIT DI MANUTENZIONE | FLANGE | ADATTATORE DI CARICO |
| ESP | PEDIDO | RESORTE DE GAS | KIT DE REPARACION | BRIDA | ADAPTADOR DE CARGA |
| POR | PEDIDO | CILINDRO DE GÁS | KIT DE MANUTENÇÃO | FLANGE | ADAPTADOR DE CARGA |

# ASP 300

*Threaded*

AZOL GAS

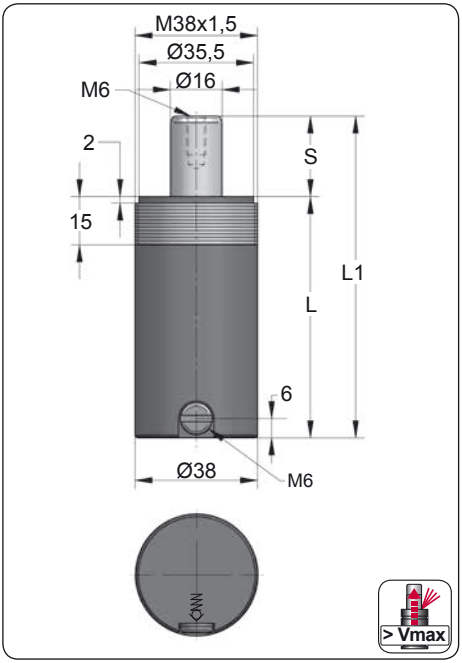


| ORDER | S (mm) | L1 ±0,25 (mm) | L (mm) | Kg. |
|---|---|---|---|---|
| ASP 300 012 | 12.7 | 75.4 | 62.7 | 0.43 |
| ASP 300 025 | 25 | 100 | 75 | 0.50 |
| ASP 300 038 | 38 | 126 | 88 | 0.59 |
| ASP 300 050 | 50 | 150 | 100 | 0.63 |
| ASP 300 063 | 63.5 | 177 | 113.5 | 0.71 |
| ASP 300 080 | 80 | 210 | 130 | 0.81 |
| ASP 300 100 | 100 | 250 | 150 | 0.93 |

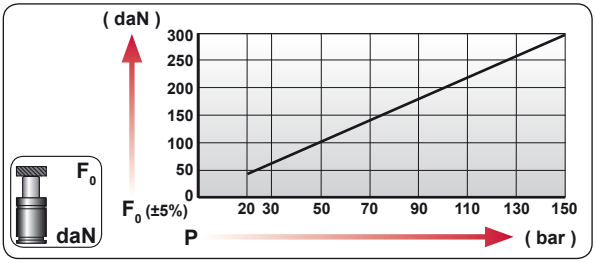


| CODE | bar | psi | $F_0$ daN | $F_1$ daN |
|---|---|---|---|---|
| ASP 300 050 | 150 | 2175 | 300 | 430 |
| --------- | --- | --- | --- | --- |

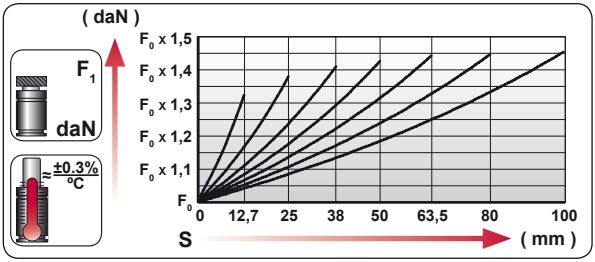


| | ENG | ORDER |
|---|---|---|
| | DEU | BESTELLUNG |
| | FRA | COMMANDE |
| | ITA | ORDINE |
| | ESP | PEDIDO |
| | POR | PEDIDO |

$F_0$ daN — S mm

ASP 300 050

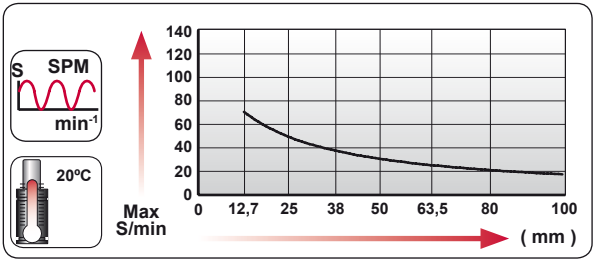


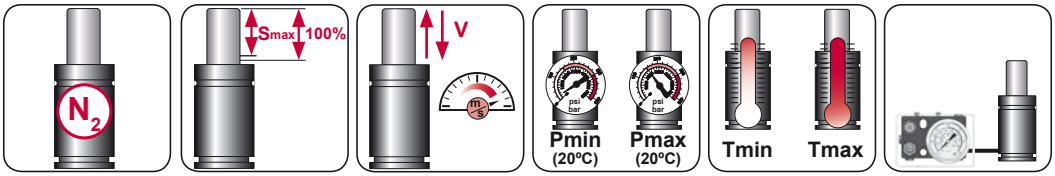


| $N_2$ | Smax < 90% | Vmax 1,6 m/s | bar psi 20 290 | bar psi 150 2175 | ºC ºF 0 32 | ºC ºF 80 176 | |
|---|---|---|---|---|---|---|---|

AZOL GAS

# ASP 300 MOUNTS

*Threaded*

## E08-038

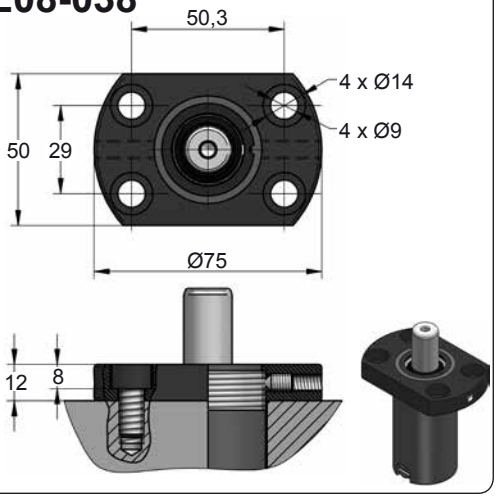









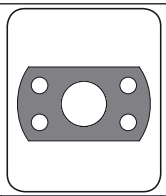

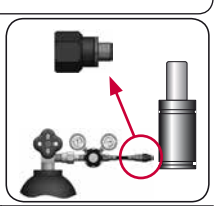

| CODE | | ASP 300 050 | KIT XXXXXXX-S<br>KIT XXXXXXX-C | E08-038 | 06 GA 11 |
|---|---|---|---|---|---|
| ENG | ORDER | GAS SPRING | REPAIR KIT | FLANGE | CHARGING ADAPTER |
| DEU | BESTELLUNG | GASDRUCKFEDER | ERSATZTEILSATZ | FLANSCHE | LADEADAPTER |
| FRA | COMMANDE | RESSORT À GAZ | KIT DE RÉPARATION | BRIDE | RACCORD DE CHARGE |
| ITA | ORDINE | CILINDRO AD AZOTO | KIT DI MANUTENZIONE | FLANGE | ADATTATORE DI CARICO |
| ESP | PEDIDO | RESORTE DE GAS | KIT DE REPARACION | BRIDA | ADAPTADOR DE CARGA |
| POR | PEDIDO | CILINDRO DE GÁS | KIT DE MANUTENÇÃO | FLANGE | ADAPTADOR DE CARGA |

# ASP 500

*Threaded*

AZOL GAS

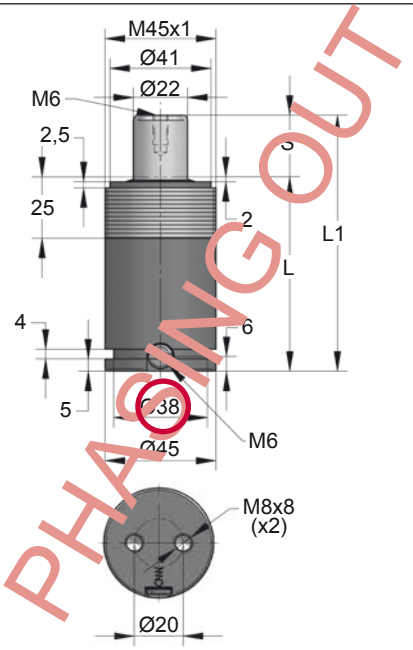


PHASING OUT

| ORDER | S (mm) | L1 ±0,25 (mm) | L (mm) | Kg. |
|---|---|---|---|---|
| ASP 500 015 | 15 | 84 | 69 | 0.63 |
| ASP 500 025 | 25 | 104 | 79 | 0.71 |
| ASP 500 038 | 38 | 130 | 92 | 0.80 |
| ASP 500 050 | 50 | 154 | 104 | 0.87 |
| ASP 500 063 | 63.5 | 181 | 117.5 | 0.93 |
| ASP 500 080 | 80 | 214 | 134 | 1.03 |
| ASP 500 100 | 100 | 254 | 154 | 1.17 |

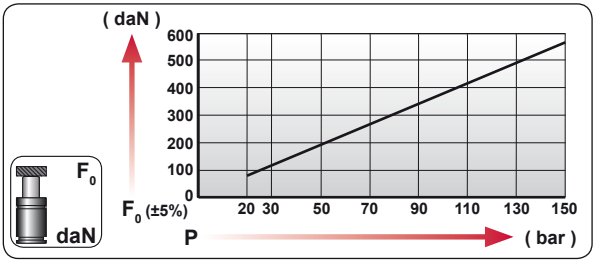


| CODE | bar | psi | F0 daN | F1 daN |
|---|---|---|---|---|
| ASP 500 050 | 130 | 1885 | 495 | 725 |
| --------- | --- | --- | --- | --- |

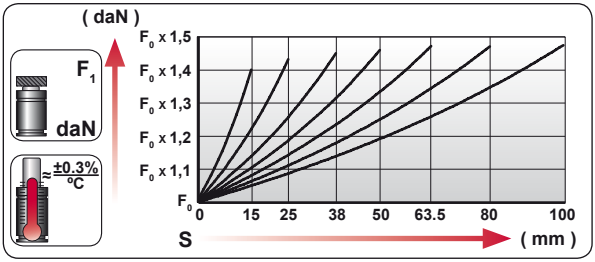


| | |
|---|---|
| ENG | ORDER |
| DEU | BESTELLUNG |
| FRA | COMMANDE |
| ITA | ORDINE |
| ESP | PEDIDO |
| POR | PEDIDO |

F0 daN — S mm

ASP 500 50

ASP 500 050

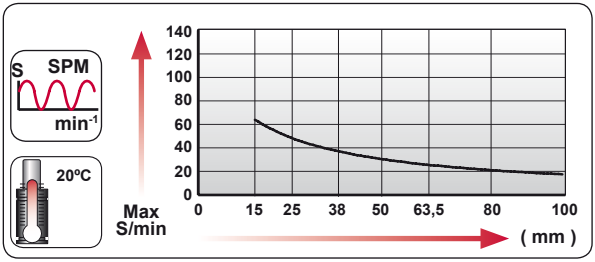


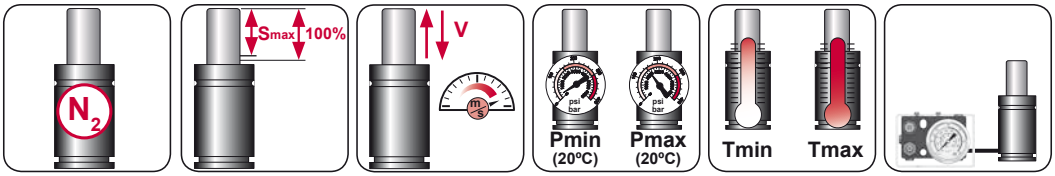


| $N_2$ | Smax < 90% | Vmax 1,6 m/s | bar psi 20 290 | bar psi 150 2175 | ºC ºF 0 32 | ºC ºF 80 176 | |
|---|---|---|---|---|---|---|---|

AZOL GAS

# ASP 500 MOUNTS

*Threaded*

## E03-045

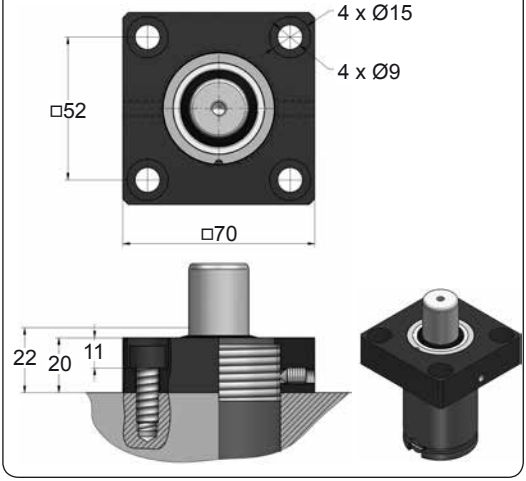









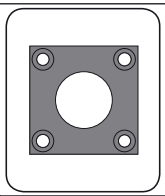

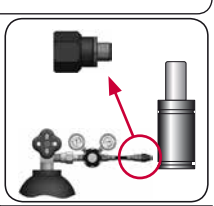

| CODE | | ASP 500 050 | KIT XXXXXXX-S<br>KIT XXXXXXX-C | E03-045 | 06 GA 11 |
|---|---|---|---|---|---|
| ENG | ORDER | GAS SPRING | REPAIR KIT | FLANGE | CHARGING ADAPTER |
| DEU | BESTELLUNG | GASDRUCKFEDER | ERSATZTEILSATZ | FLANSCHE | LADEADAPTER |
| FRA | COMMANDE | RESSORT À GAZ | KIT DE RÉPARATION | BRIDE | RACCORD DE CHARGE |
| ITA | ORDINE | CILINDRO AD AZOTO | KIT DI MANUTENZIONE | FLANGE | ADATTATORE DI CARICO |
| ESP | PEDIDO | RESORTE DE GAS | KIT DE REPARACION | BRIDA | ADAPTADOR DE CARGA |
| POR | PEDIDO | CILINDRO DE GÁS | KIT DE MANUTENÇÃO | FLANGE | ADAPTADOR DE CARGA |

# ASP 500 V1

*Threaded*

AZOL GAS

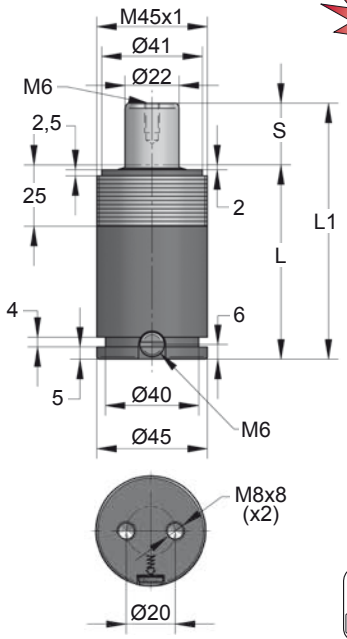


| ORDER | S (mm) | L1 ±0,25 (mm) | L (mm) | Kg. |
|---|---|---|---|---|
| ASP 500 015 V1 | 15 | 84 | 69 | 0.63 |
| ASP 500 025 V1 | 25 | 104 | 79 | 0.71 |
| ASP 500 038 V1 | 38 | 130 | 92 | 0.80 |
| ASP 500 050 V1 | 50 | 154 | 104 | 0.87 |
| ASP 500 063 V1 | 63.5 | 181 | 117.5 | 0.93 |
| ASP 500 080 V1 | 80 | 214 | 134 | 1.03 |
| ASP 500 100 V1 | 100 | 254 | 154 | 1.17 |

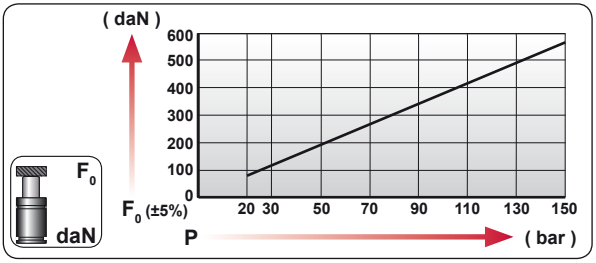


| CODE | bar | psi | $F_0$ daN | $F_1$ daN |
|---|---|---|---|---|
| ASP 500 050 V1 | 130 | 1885 | 495 | 725 |
| --------- | --- | --- | --- | --- |

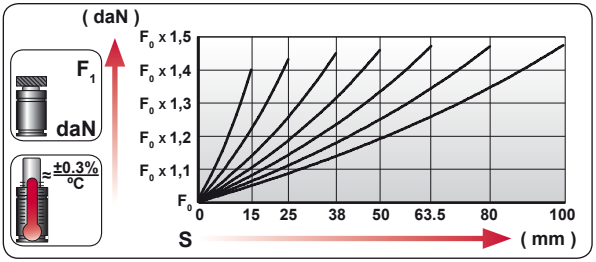


| ENG | ORDER |
|---|---|
| DEU | BESTELLUNG |
| FRA | COMMANDE |
| ITA | ORDINE |
| ESP | PEDIDO |
| POR | PEDIDO |




ASP 500 50

ASP 500 050 V1

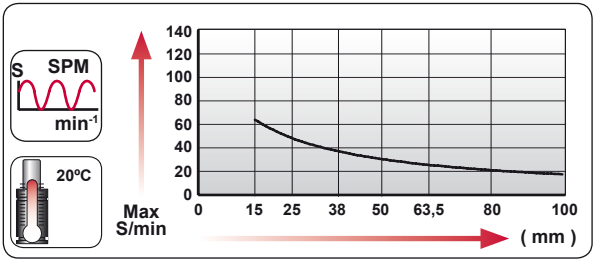


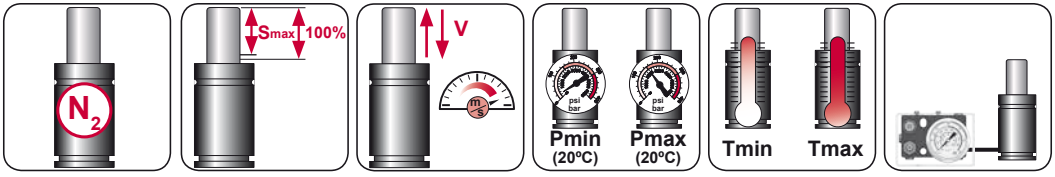


| $N_2$ | Smax < 90% | Vmax 1,6 m/s | bar psi 20 290 | bar psi 150 2175 | ºC ºF 0 32 | ºC ºF 80 176 |
|---|---|---|---|---|---|---|

AZOL GAS

# ASP 500 V1 MOUNTS

*Threaded*

## E03-045

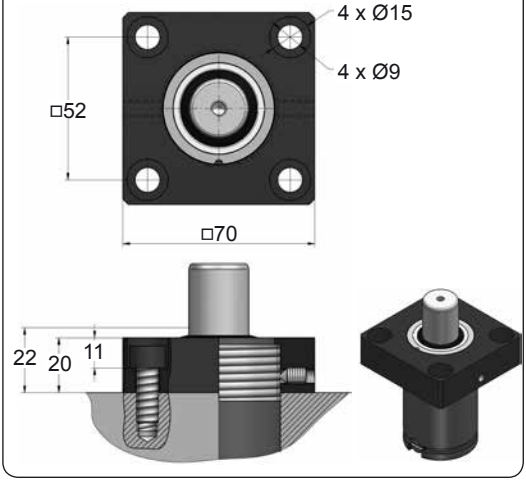









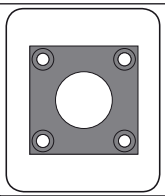

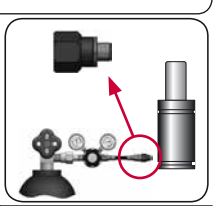

| CODE | | ASP 500 050 V1 | KIT XXXXXXX-S<br>KIT XXXXXXX-C | E03-045 | 06 GA 11 |
|---|---|---|---|---|---|
| ENG | ORDER | GAS SPRING | REPAIR KIT | FLANGE | CHARGING ADAPTER |
| DEU | BESTELLUNG | GASDRUCKFEDER | ERSATZTEILSATZ | FLANSCHE | LADEADAPTER |
| FRA | COMMANDE | RESSORT À GAZ | KIT DE RÉPARATION | BRIDE | RACCORD DE CHARGE |
| ITA | ORDINE | CILINDRO AD AZOTO | KIT DI MANUTENZIONE | FLANGE | ADATTATORE DI CARICO |
| ESP | PEDIDO | RESORTE DE GAS | KIT DE REPARACION | BRIDA | ADAPTADOR DE CARGA |
| POR | PEDIDO | CILINDRO DE GÁS | KIT DE MANUTENÇÃO | FLANGE | ADAPTADOR DE CARGA |

# AST 200

*Threaded*

AZOL GAS

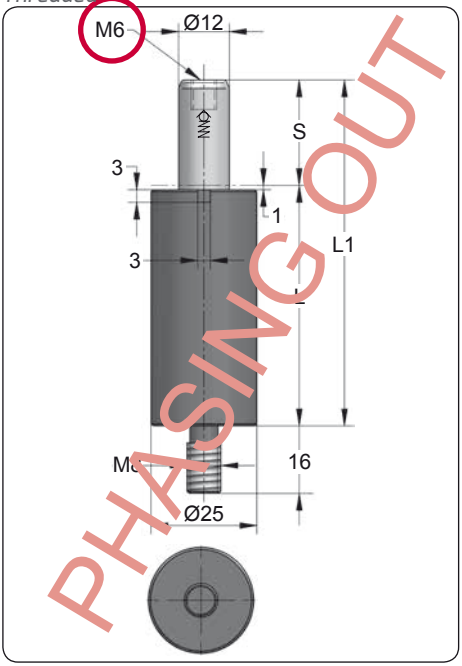


| CODE | S (mm) | L1 ±0,25 (mm) | L (mm) | Kg. |
|---|---|---|---|---|
| AST 200 007 | 7 | 46 | 39 | 0.12 |
| AST 200 012 | 12 | 56 | 44 | 0.13 |
| AST 200 016 | 16 | 64 | 48 | 0.14 |
| AST 200 025 | 25 | 82 | 57 | 0.16 |
| AST 200 038 | 38 | 108 | 70 | 0.19 |
| AST 200 050 | 50 | 132 | 82 | 0.21 |
| AST 200 063 | 63 | 158 | 95 | 0.24 |

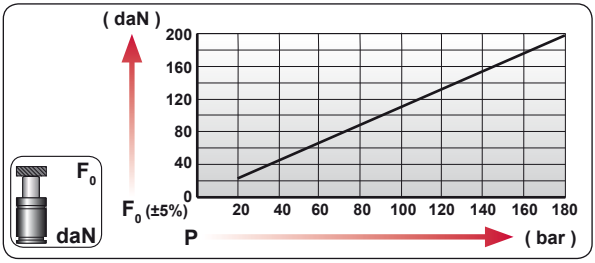


| CODE | bar | psi | $F_0$ daN | $F_1$ daN |
|---|---|---|---|---|
| AST 200 050 | 170 | 2465 | 190 | 280 |
| --------- | --- | --- | --- | --- |

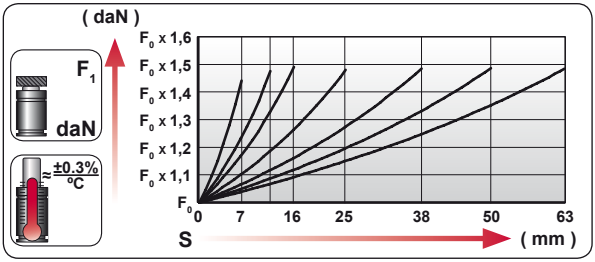


| | |
|---|---|
| ENG | ORDER |
| DEU | BESTELLUNG |
| FRA | COMMANDE |
| ITA | ORDINE |
| ESP | PEDIDO |
| POR | PEDIDO |

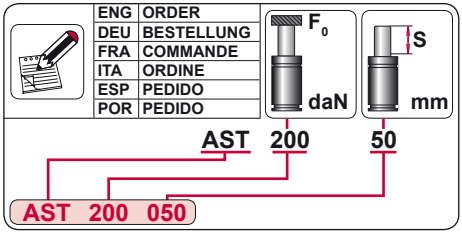


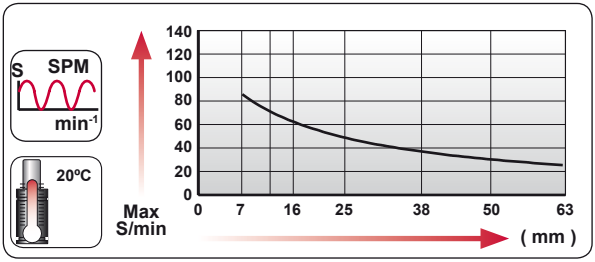


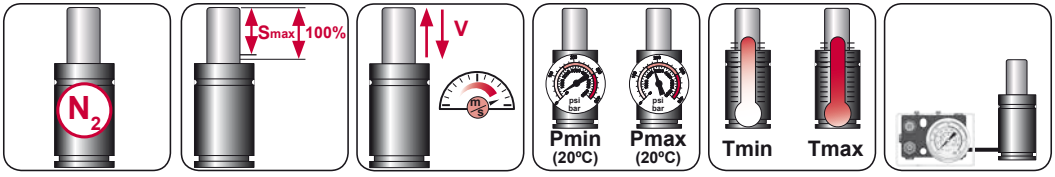


| $N_2$ | Smax < 90% | Vmax 1,6 m/s | bar psi 20 290 | bar psi 180 2610 | °C °F 0 32 | °C °F 80 176 | |
|---|---|---|---|---|---|---|---|

AZOL GAS

# AST 200 MOUNTS

*Threaded*

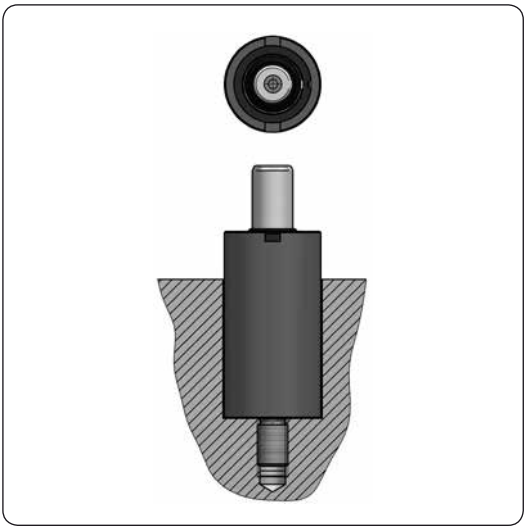

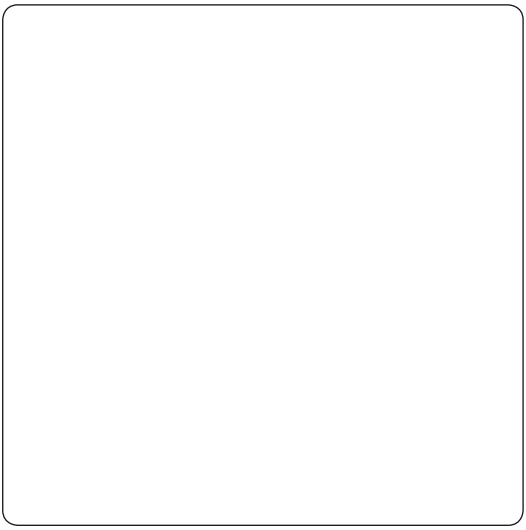

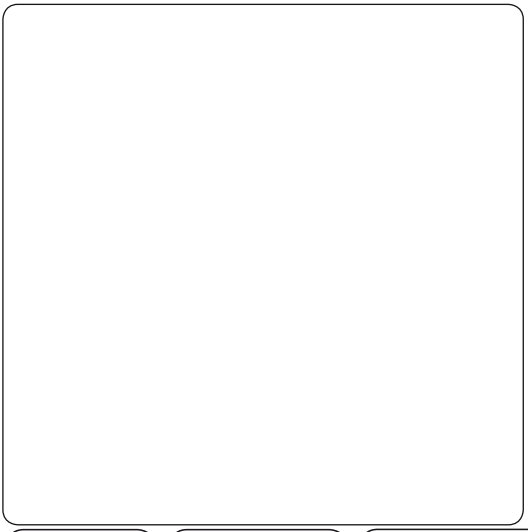

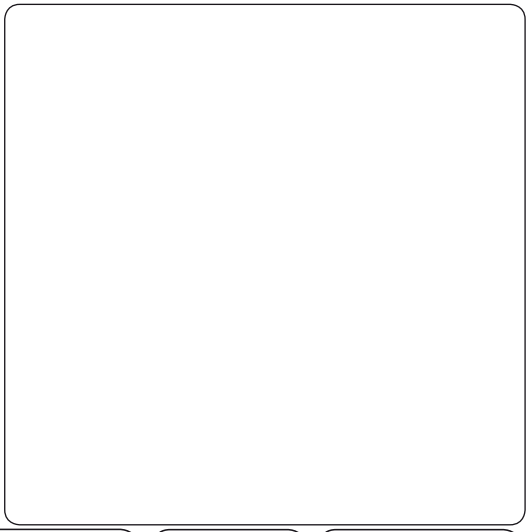








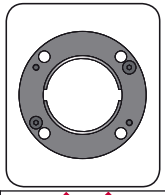

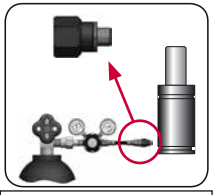

| CODE | | AST 200 050 | KIT XXXXXXX-S<br>KIT XXXXXXX-C | X | 06 GA 11 |
|---|---|---|---|---|---|
| ENG | ORDER | GAS SPRING | REPAIR KIT | FLANGE | CHARGING ADAPTER |
| DEU | BESTELLUNG | GASDRUCKFEDER | ERSATZTEILSATZ | FLANSCHE | LADEADAPTER |
| FRA | COMMANDE | RESSORT À GAZ | KIT DE RÉPARATION | BRIDE | RACCORD DE CHARGE |
| ITA | ORDINE | CILINDRO AD AZOTO | KIT DI MANUTENZIONE | FLANGE | ADATTATORE DI CARICO |
| ESP | PEDIDO | RESORTE DE GAS | KIT DE REPARACION | BRIDA | ADAPTADOR DE CARGA |
| POR | PEDIDO | CILINDRO DE GÁS | KIT DE MANUTENÇÃO | FLANGE | ADAPTADOR DE CARGA |

# AST 200 V1

*Threaded*

AZOL GAS

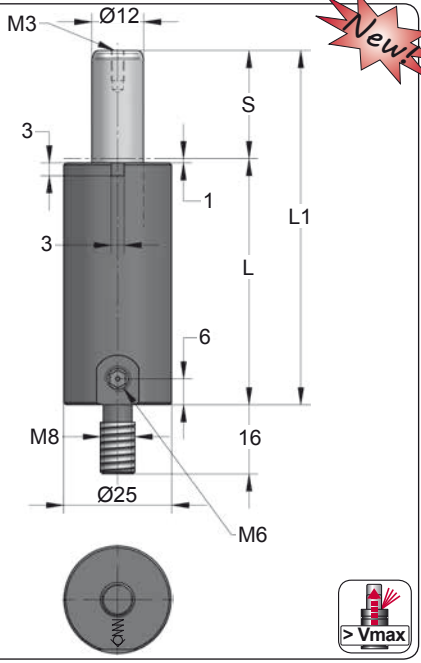


Newt

| CODE | S (mm) | L1 ±0,25 (mm) | L (mm) | Kg. |
|---|---|---|---|---|
| AST 200 007 V1 | 7 | 46 | 39 | 0.12 |
| AST 200 012 V1 | 12 | 56 | 44 | 0.13 |
| AST 200 016 V1 | 16 | 64 | 48 | 0.14 |
| AST 200 025 V1 | 25 | 82 | 57 | 0.16 |
| AST 200 038 V1 | 38 | 108 | 70 | 0.19 |
| AST 200 050 V1 | 50 | 132 | 82 | 0.21 |
| AST 200 063 V1 | 63 | 158 | 95 | 0.24 |

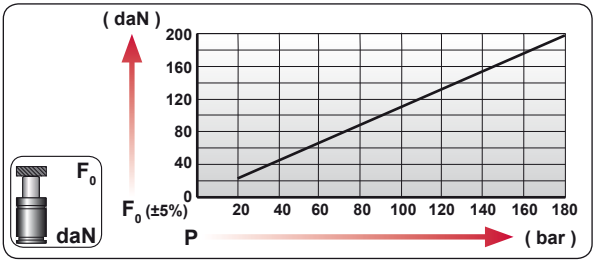


| CODE | bar | psi | F0 daN | F1 daN |
|---|---|---|---|---|
| AST 200 050 V1 | 170 | 2465 | 190 | 280 |
| --------- | --- | --- | --- | --- |

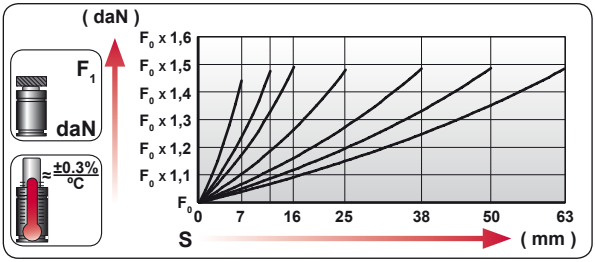


| | |
|---|---|
| ENG | ORDER |
| DEU | BESTELLUNG |
| FRA | COMMANDE |
| ITA | ORDINE |
| ESP | PEDIDO |
| POR | PEDIDO |




AST 200 50

AST 200 050 V1

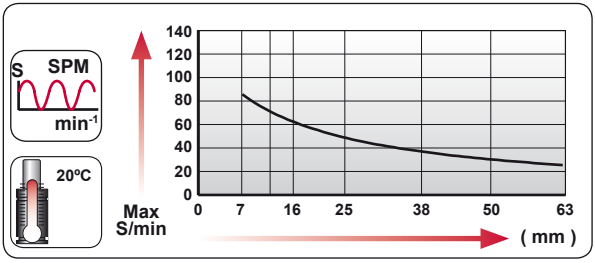


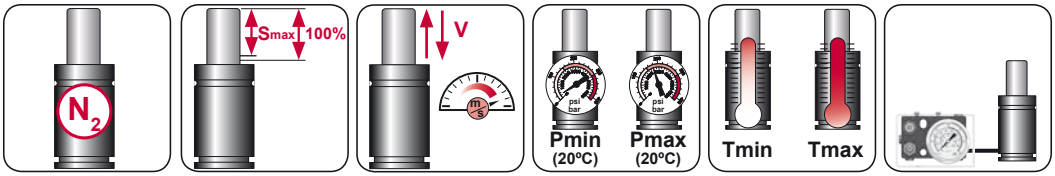


| $N_2$ | Smax < 90% | Vmax 1,6 m/s | bar psi 20 290 | bar psi 180 2610 | °C °F 0 32 | °C °F 80 176 |
|---|---|---|---|---|---|---|

AZOL GAS

# AST 200 V1 *MOUNTS*

*Threaded*

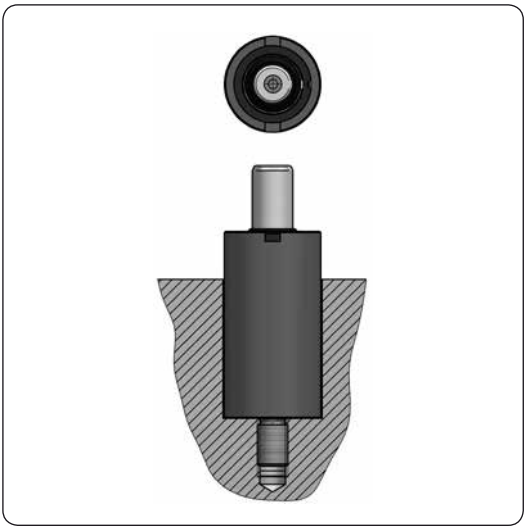



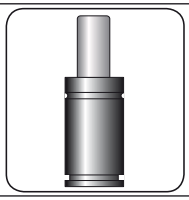




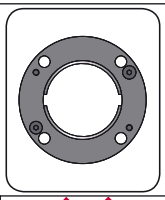

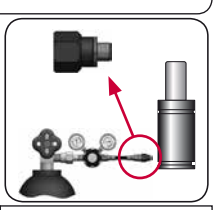

| CODE | | AST 200 050 V1 | KIT XXXXXXX-S<br>KIT XXXXXXX-C | X | 06 GA 11 |
|---|---|---|---|---|---|
| ENG | ORDER | GAS SPRING | REPAIR KIT | FLANGE | CHARGING ADAPTER |
| DEU | BESTELLUNG | GASDRUCKFEDER | ERSATZTEILSATZ | FLANSCHE | LADEADAPTER |
| FRA | COMMANDE | RESSORT À GAZ | KIT DE RÉPARATION | BRIDE | RACCORD DE CHARGE |
| ITA | ORDINE | CILINDRO AD AZOTO | KIT DI MANUTENZIONE | FLANGE | ADATTATORE DI CARICO |
| ESP | PEDIDO | RESORTE DE GAS | KIT DE REPARACION | BRIDA | ADAPTADOR DE CARGA |
| POR | PEDIDO | CILINDRO DE GÁS | KIT DE MANUTENÇÃO | FLANGE | ADAPTADOR DE CARGA |

# AST 250

*Threaded*

AZOL GAS

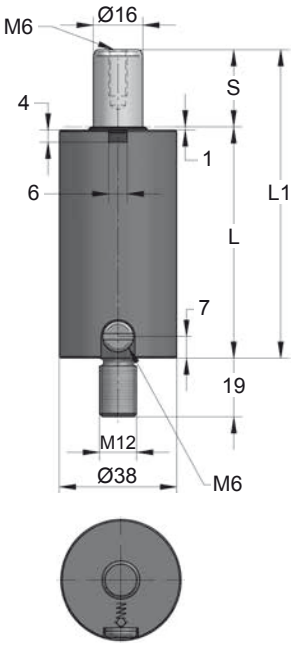


> Vmax

| ORDER | S (mm) | L1 ±0,25 (mm) | L (mm) | Kg. |
|---|---|---|---|---|
| AST 250 012 | 12.7 | 75.4 | 62.7 | 0.46 |
| AST 250 025 | 25 | 100 | 75 | 0.53 |
| AST 250 038 | 38 | 126 | 88 | 0.61 |
| AST 250 050 | 50 | 150 | 100 | 0.67 |
| AST 250 063 | 63.5 | 177 | 113.5 | 0.75 |
| AST 250 080 | 80 | 210 | 130 | 0.84 |
| AST 250 100 | 100 | 250 | 150 | 0.96 |

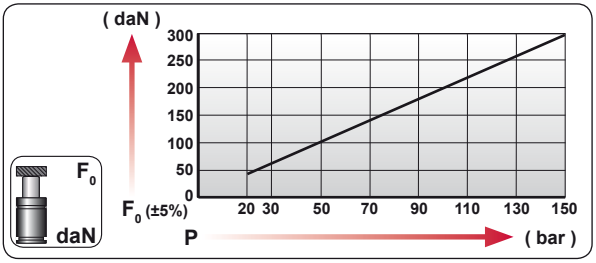


| CODE | | bar | psi | $F_0$ daN | $F_1$ daN |
|---|---|---|---|---|---|
| AST 250 050 | | 125 | 1810 | 250 | 365 |
| --------- | | --- | --- | --- | --- |

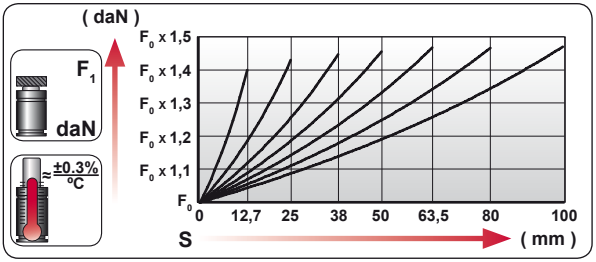


| | |
|---|---|
| ENG | ORDER |
| DEU | BESTELLUNG |
| FRA | COMMANDE |
| ITA | ORDINE |
| ESP | PEDIDO |
| POR | PEDIDO |




AST 250 50

AST 250 050

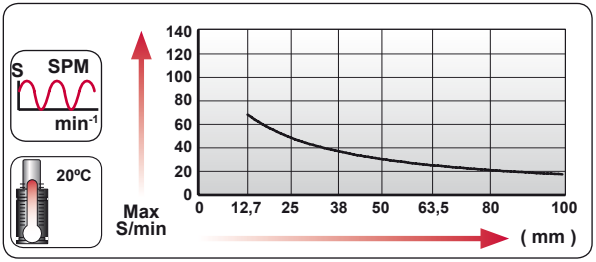


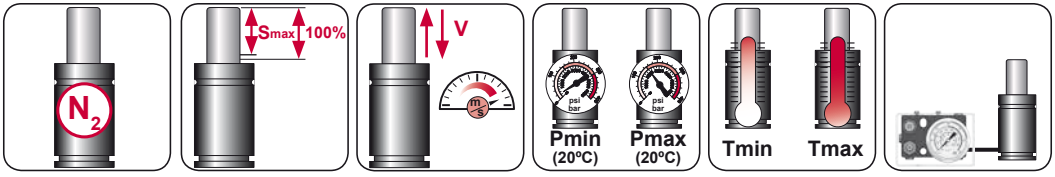


| $N_2$ | Smax < 90% | Vmax 1,6 m/s | bar psi 20 290 | bar psi 150 2175 | ºC ºF 0 32 | ºC ºF 80 176 | |
|---|---|---|---|---|---|---|---|

AZOL GAS

# AST 250 MOUNTS

*Threaded*

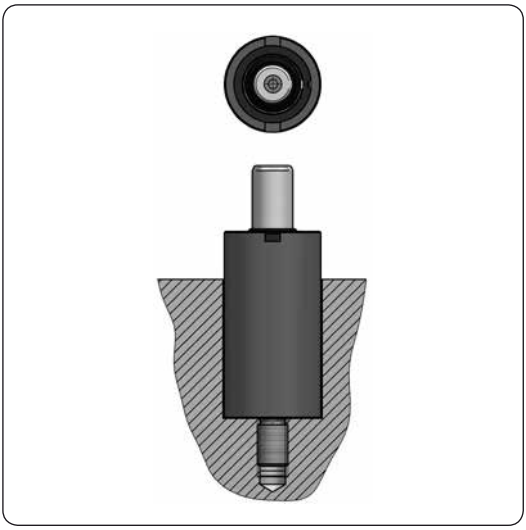

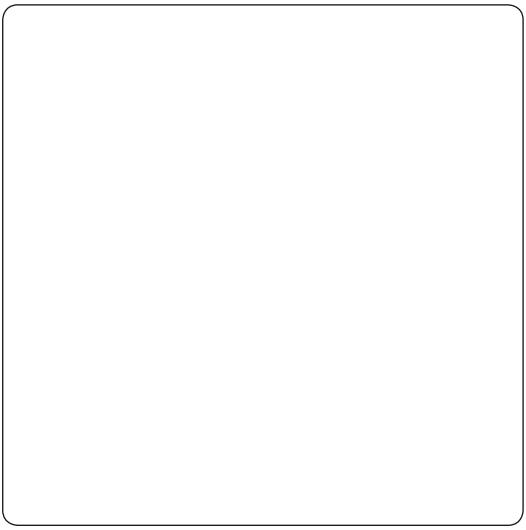

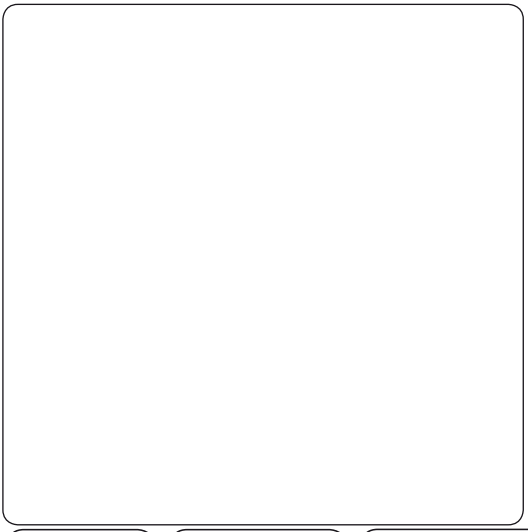

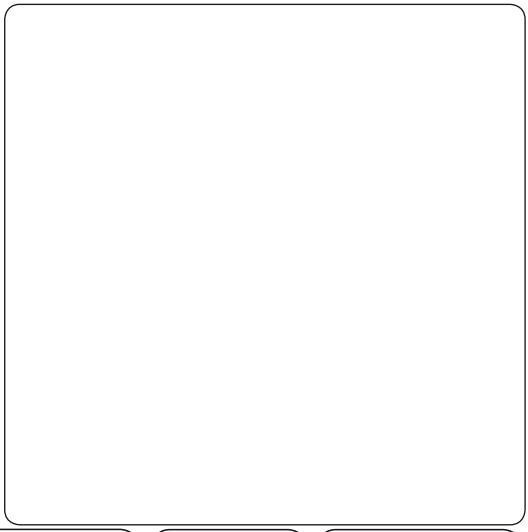








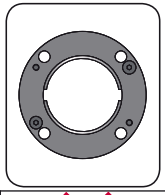

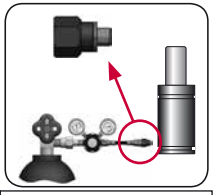

| CODE | | AST 250 050 | KIT XXXXXXX-S<br>KIT XXXXXXX-C | X | 06 GA 11 |
|---|---|---|---|---|---|
| ENG | ORDER | GAS SPRING | REPAIR KIT | FLANGE | CHARGING ADAPTER |
| DEU | BESTELLUNG | GASDRUCKFEDER | ERSATZTEILSATZ | FLANSCHE | LADEADAPTER |
| FRA | COMMANDE | RESSORT À GAZ | KIT DE RÉPARATION | BRIDE | RACCORD DE CHARGE |
| ITA | ORDINE | CILINDRO AD AZOTO | KIT DI MANUTENZIONE | FLANGE | ADATTATORE DI CARICO |
| ESP | PEDIDO | RESORTE DE GAS | KIT DE REPARACION | BRIDA | ADAPTADOR DE CARGA |
| POR | PEDIDO | CILINDRO DE GÁS | KIT DE MANUTENÇÃO | FLANGE | ADAPTADOR DE CARGA |

# AST 300

*Threaded*

AZOL GAS

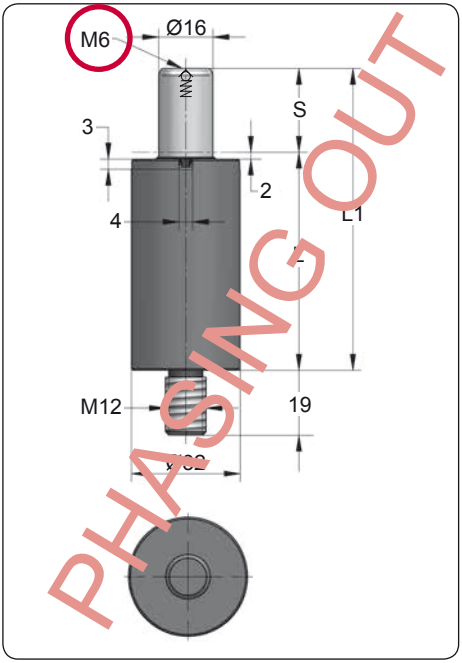


| CODE | S (mm) | L1 ±0,25 (mm) | L (mm) | Kg. |
|---|---|---|---|---|
| AST 300 007 | 7 | 53 | 46 | 0.23 |
| AST 300 012 | 12 | 63 | 51 | 0.25 |
| AST 300 016 | 16 | 71 | 55 | 0.26 |
| AST 300 025 | 25 | 89 | 64 | 0.30 |
| AST 300 038 | 38 | 115 | 77 | 0.35 |
| AST 300 050 | 50 | 139 | 89 | 0.40 |
| AST 300 063 | 63 | 165 | 102 | 0.45 |
| AST 300 080 | 80 | 199 | 119 | 0.51 |

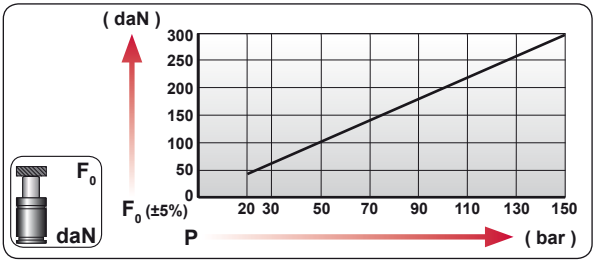


| CODE | bar | psi | $F_0$ daN | $F_1$ daN |
|---|---|---|---|---|
| AST 300 050 | 150 | 2175 | 300 | 460 |
| --------- | --- | --- | --- | --- |

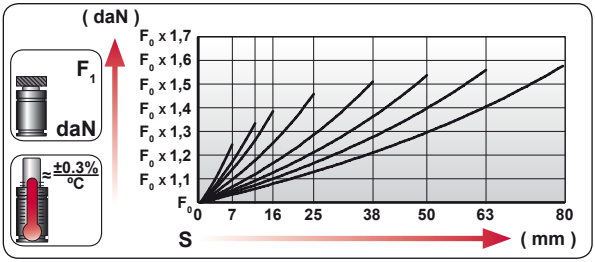


| | |
|---|---|
| ENG | ORDER |
| DEU | BESTELLUNG |
| FRA | COMMANDE |
| ITA | ORDINE |
| ESP | PEDIDO |
| POR | PEDIDO |

$F_0$ daN — S mm

AST 300 50

AST 300 050

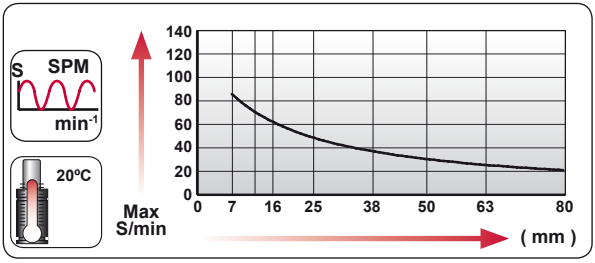


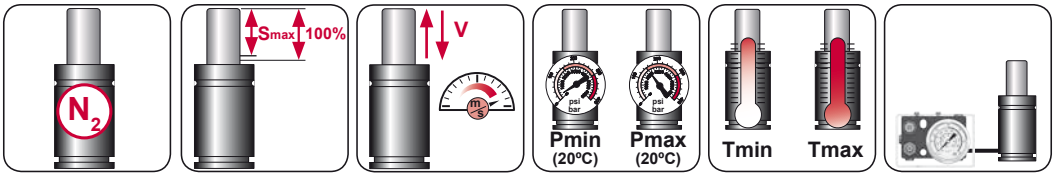


| $N_2$ | Smax < 90% | Vmax 1,6 m/s | bar psi 20 290 | bar psi 150 2175 | ºC ºF 0 32 | ºC ºF 80 176 | |
|---|---|---|---|---|---|---|---|

AZOL GAS

# AST 300 MOUNTS

*Threaded*

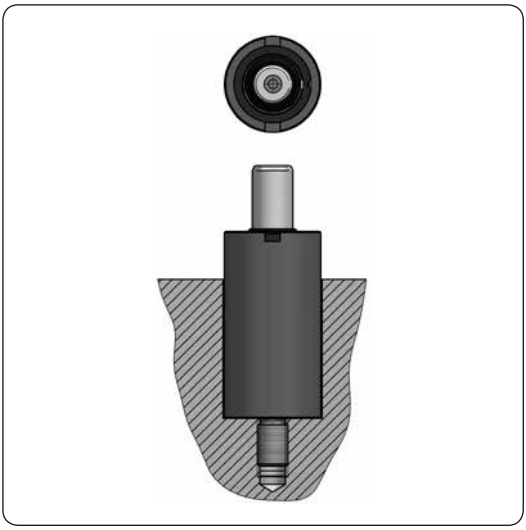

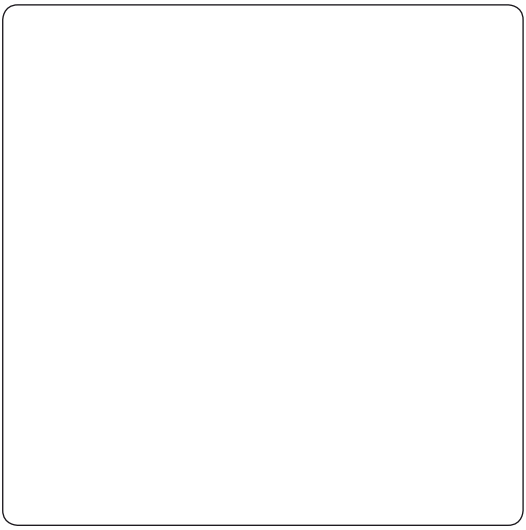

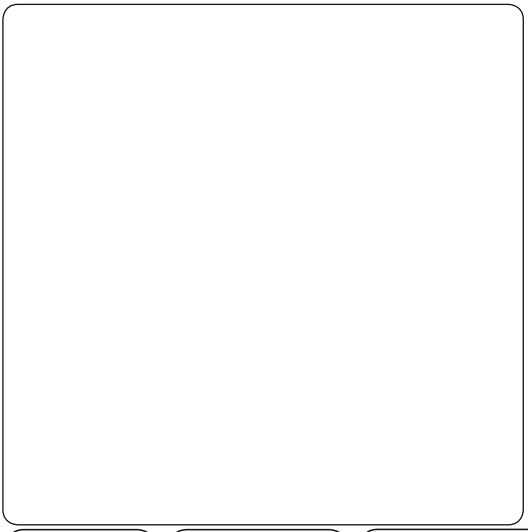

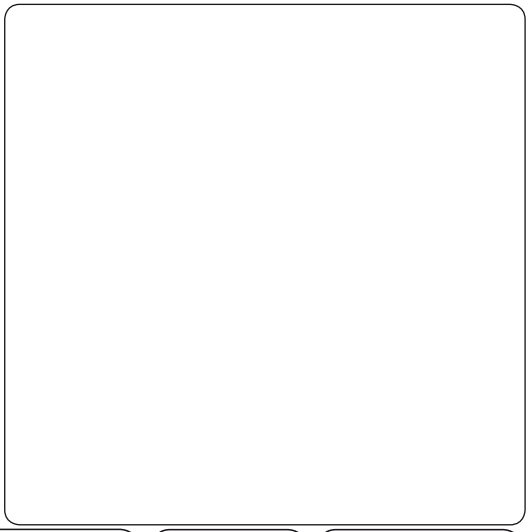








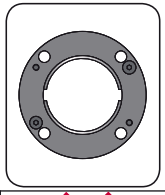

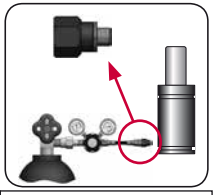

| CODE | | AST 300 050 | KIT XXXXXXX-S<br>KIT XXXXXXX-C | X | 06 GA 10<br>06 GA 11 |
|---|---|---|---|---|---|
| ENG | ORDER | GAS SPRING | REPAIR KIT | FLANGE | CHARGING ADAPTER |
| DEU | BESTELLUNG | GASDRUCKFEDER | ERSATZTEILSATZ | FLANSCHE | LADEADAPTER |
| FRA | COMMANDE | RESSORT À GAZ | KIT DE RÉPARATION | BRIDE | RACCORD DE CHARGE |
| ITA | ORDINE | CILINDRO AD AZOTO | KIT DI MANUTENZIONE | FLANGE | ADATTATORE DI CARICO |
| ESP | PEDIDO | RESORTE DE GAS | KIT DE REPARACION | BRIDA | ADAPTADOR DE CARGA |
| POR | PEDIDO | CILINDRO DE GÁS | KIT DE MANUTENÇÃO | FLANGE | ADAPTADOR DE CARGA |

# AST 300 V1

*Threaded*

AZOL GAS

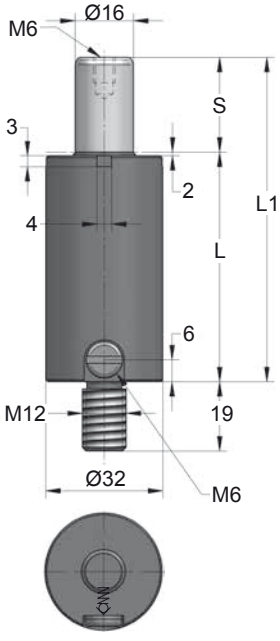


Newt

| CODE | S (mm) | L1 ±0,25 (mm) | L (mm) | Kg. |
|---|---|---|---|---|
| AST 300 007 V1 | 7 | 53 | 46 | 0.23 |
| AST 300 012 V1 | 12 | 63 | 51 | 0.25 |
| AST 300 016 V1 | 16 | 71 | 55 | 0.26 |
| AST 300 025 V1 | 25 | 89 | 64 | 0.30 |
| AST 300 038 V1 | 38 | 115 | 77 | 0.35 |
| AST 300 050 V1 | 50 | 139 | 89 | 0.40 |
| AST 300 063 V1 | 63 | 165 | 102 | 0.45 |
| AST 300 080 V1 | 80 | 199 | 119 | 0.51 |

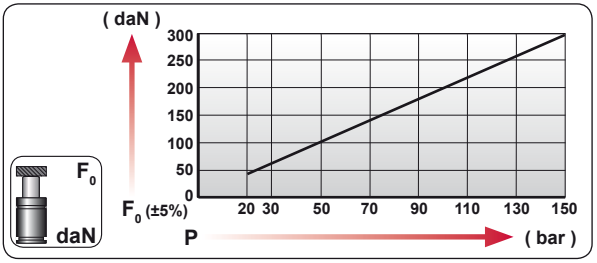


| CODE | bar | psi | $F_0$ daN | $F_1$ daN |
|---|---|---|---|---|
| AST 300 050 V1 | 150 | 2175 | 300 | 460 |
| --------- | --- | --- | --- | --- |

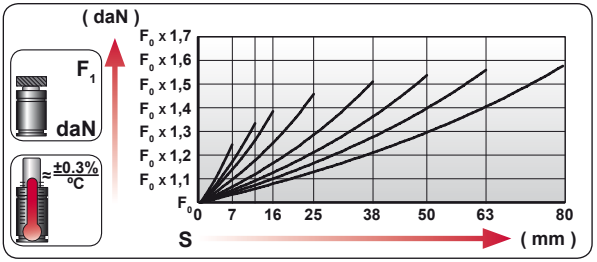


| | |
|---|---|
| ENG | ORDER |
| DEU | BESTELLUNG |
| FRA | COMMANDE |
| ITA | ORDINE |
| ESP | PEDIDO |
| POR | PEDIDO |

$F_0$ daN — S mm

AST 300 50

AST 300 050 V1

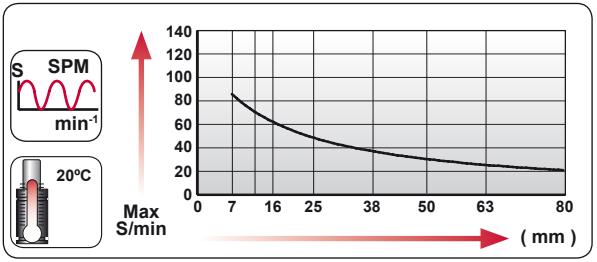


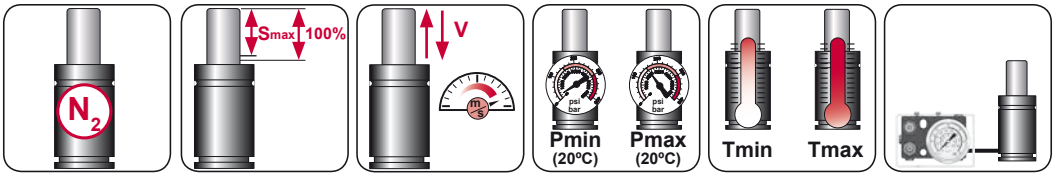


| $N_2$ | Smax < 90% | Vmax 1,6 m/s | bar psi 20 290 | bar psi 150 2175 | ºC ºF 0 32 | ºC ºF 80 176 |
|---|---|---|---|---|---|---|

AZOL GAS

# AST 300 V1 *MOUNTS*

*Threaded*

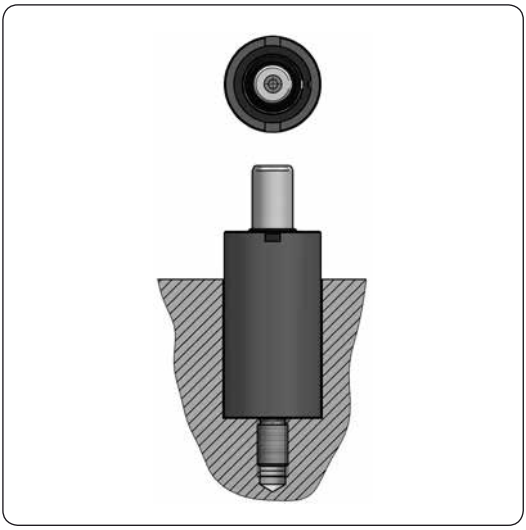



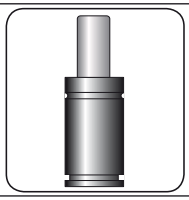




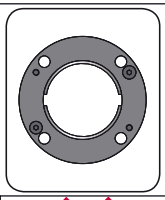

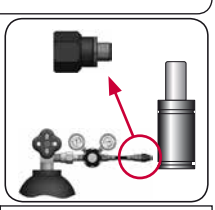

| CODE | | AST 300 050 V1 | KIT XXXXXXX-S<br>KIT XXXXXXX-C | X | 06 GA 11 |
|---|---|---|---|---|---|
| ENG | ORDER | GAS SPRING | REPAIR KIT | FLANGE | CHARGING ADAPTER |
| DEU | BESTELLUNG | GASDRUCKFEDER | ERSATZTEILSATZ | FLANSCHE | LADEADAPTER |
| FRA | COMMANDE | RESSORT À GAZ | KIT DE RÉPARATION | BRIDE | RACCORD DE CHARGE |
| ITA | ORDINE | CILINDRO AD AZOTO | KIT DI MANUTENZIONE | FLANGE | ADATTATORE DI CARICO |
| ESP | PEDIDO | RESORTE DE GAS | KIT DE REPARACION | BRIDA | ADAPTADOR DE CARGA |
| POR | PEDIDO | CILINDRO DE GÁS | KIT DE MANUTENÇÃO | FLANGE | ADAPTADOR DE CARGA |

# AST 1000

*Threaded*

AZOL GAS

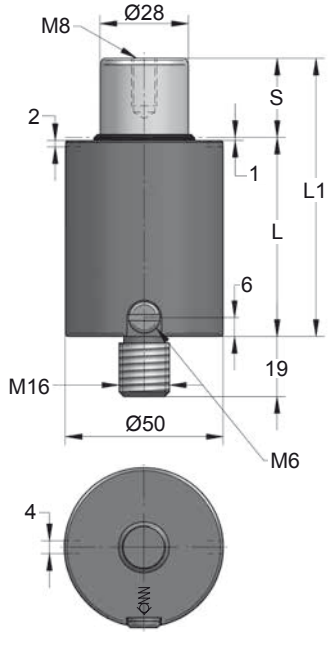


| ORDER | S (mm) | L1 ±0,25 (mm) | L (mm) | Kg. |
|---|---|---|---|---|
| AST 1000 013 | 13 | 64 | 51 | 0.68 |
| AST 1000 016 | 16 | 70 | 54 | 0.71 |
| AST 1000 019 | 19 | 76 | 57 | 0.74 |
| AST 1000 025 | 25 | 88 | 63 | 0.80 |
| AST 1000 032 | 32 | 102 | 70 | 0.86 |
| AST 1000 038 | 38 | 114 | 76 | 0.92 |
| AST 1000 050 | 50 | 138 | 88 | 1.03 |
| AST 1000 063 | 63 | 164 | 101 | 1.16 |
| AST 1000 075 | 75 | 188 | 113 | 1.27 |
| AST 1000 080 | 80 | 198 | 118 | 1.32 |
| AST 1000 100 | 100 | 238 | 138 | 1.51 |
| AST 1000 125 | 125 | 288 | 163 | 1.75 |

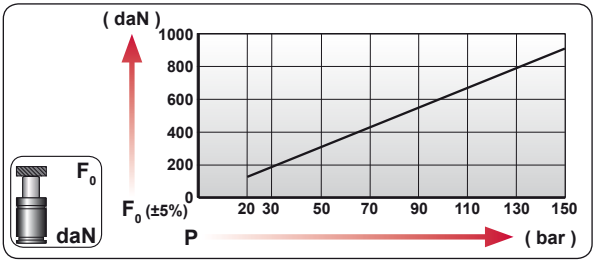


| CODE | | bar | psi | $F_0$ daN | $F_1$ daN |
|---|---|---|---|---|---|
| AST 1000 050 | | 150 | 2175 | 920 | 1645 |
| --------- | | --- | --- | --- | --- |

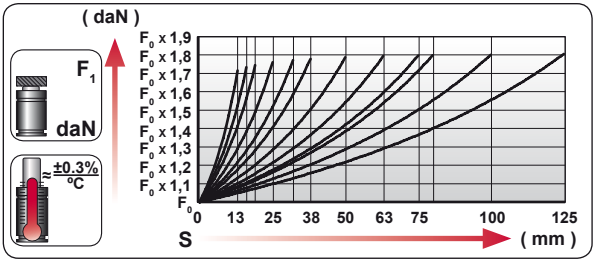


| | |
|---|---|
| ENG | ORDER |
| DEU | BESTELLUNG |
| FRA | COMMANDE |
| ITA | ORDINE |
| ESP | PEDIDO |
| POR | PEDIDO |




AST 1000 50

AST 1000 050

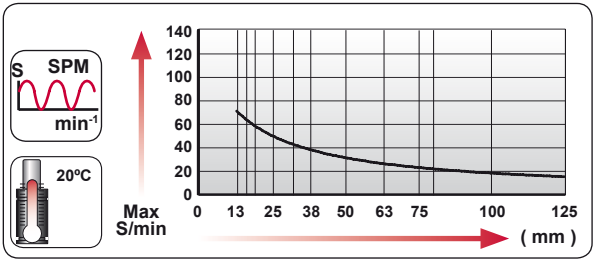


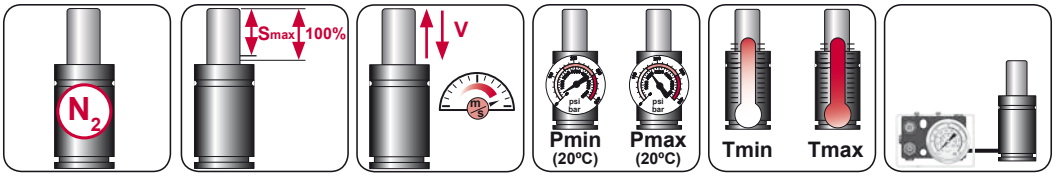


| $N_2$ | Smax < 90% | Vmax 1,6 m/s | bar psi 20 290 | bar psi 150 2175 | ºC ºF 0 32 | ºC ºF 80 176 | |
|---|---|---|---|---|---|---|---|

AZOL GAS

# AST 1000 MOUNTS

*Threaded*

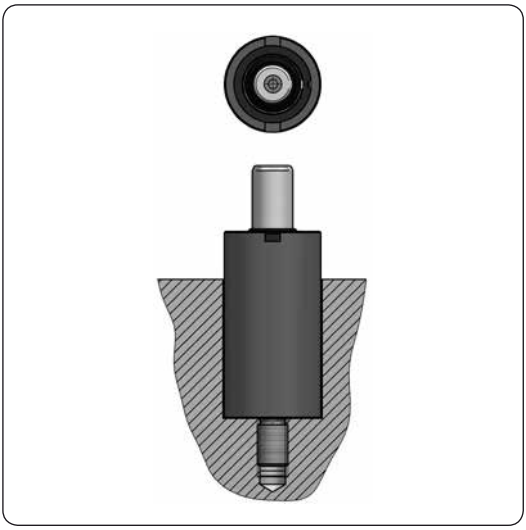

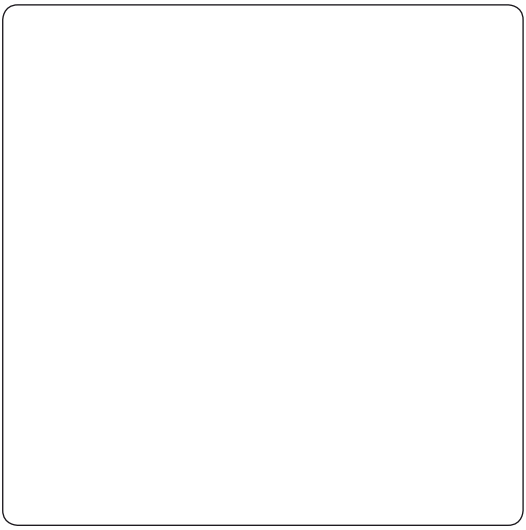

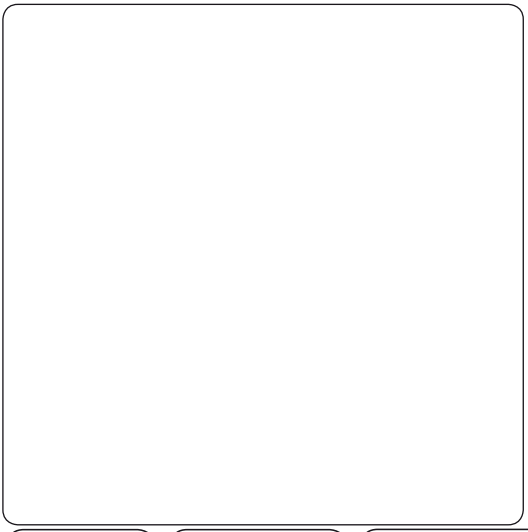

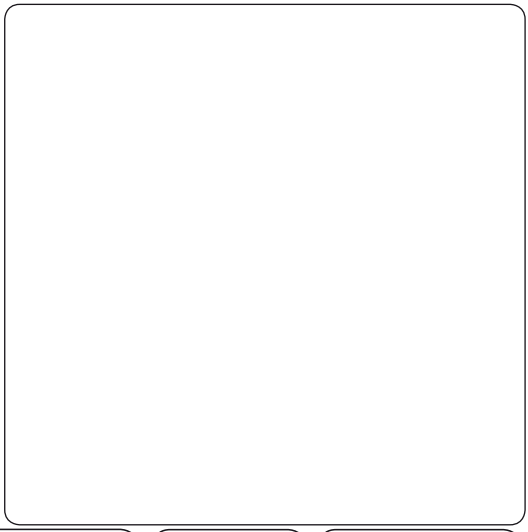








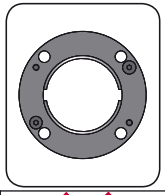

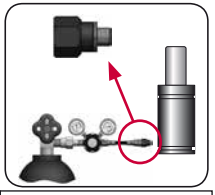

| CODE | | AST 1000 050 | KIT XXXXXXX-S<br>KIT XXXXXXX-C | X | 06 GA 11 |
|---|---|---|---|---|---|
| ENG | ORDER | GAS SPRING | REPAIR KIT | FLANGE | CHARGING ADAPTER |
| DEU | BESTELLUNG | GASDRUCKFEDER | ERSATZTEILSATZ | FLANSCHE | LADEADAPTER |
| FRA | COMMANDE | RESSORT À GAZ | KIT DE RÉPARATION | BRIDE | RACCORD DE CHARGE |
| ITA | ORDINE | CILINDRO AD AZOTO | KIT DI MANUTENZIONE | FLANGE | ADATTATORE DI CARICO |
| ESP | PEDIDO | RESORTE DE GAS | KIT DE REPARACION | BRIDA | ADAPTADOR DE CARGA |
| POR | PEDIDO | CILINDRO DE GÁS | KIT DE MANUTENÇÃO | FLANGE | ADAPTADOR DE CARGA |

AZOL GAS

# APF/AG ISO

| MODEL | $F_0$ | Ø | S | L1 | Pmax | Charge Port | | |
|---|---|---|---|---|---|---|---|---|
| APFA 150 | 150 | Ø32 | 10 - 125 | 70 - 300 | 180 | M6 | ✗ | ✓ |
| APFC-H 150 | 150 | Ø32 | 10 - 125 | 70 - 300 | 180 | G1/8" | ✓ | ✓ |
| APFA 250 | 250 | Ø38 | 10 - 125 | 70 - 300 | 150 | M6 | ✓ | ✓ |
| APFC-H 250 | 250 | Ø38 | 10 - 125 | 70 - 300 | 150 | G1/8" | ✓ | ✓ |
| APF 500 | 500 | Ø45 | 10 - 160 | 105 - 405 | 150 | G1/8" | ✓ | ✓ |
| AG 750 | 750 | Ø50 | 12.7 - 300 | 120.4 - 695 | 150 | G1/8" | ✓ | ✓ |
| AG 1500 | 1500 | Ø75 | 12.7 - 300 | 135.4 - 710 | 150 | G1/8" | ✓ | ✓ |
| AG 3000 | 3000 | Ø95 | 12.7 - 300 | 145.4 - 720 | 150 | G1/8" | ✓ | ✓ |
| AG 5000 | 5000 | Ø120 | 12.7 - 300 | 165.4 - 740 | 150 | G1/8" | ✓ | ✓ |
| AG 7500 | 7500 | Ø150 | 12.7 - 300 | 180.4 - 755 | 150 | G1/8" | ✓ | ✓ |
| AG 10000 | 10000 | Ø195 | 12.7 - 300 | 185.4 - 760 | 150 | G1/8" | ✓ | ✓ |

| | | | | | | | | |
|---|---|---|---|---|---|---|---|---|
| S mm | | 50 | 50 | 50 | 50 | 50 | 50 | 50 |
| Ø mm | | Ø50 | Ø50 | Ø50 | Ø50 | Ø50 | Ø50 | Ø50 |
| L1 mm | | L1=131<br>L1=138<br>L1=152 | L1=138 | L1=138<br>L1=150<br>L1=150 | L1=170<br>L1=185<br>L1=195 | L1=195 | L1=165<br>L1=190 | L1=220 |
| $F_0$ daN | | 1000<br>1000<br>1000 | 1000 | 1000<br>1000<br>750 | 750<br>1000<br>1000 | 750 | 1700<br>2000 | 1800 |
| MODEL | ✗ | CR 1000<br>CW 1000<br>KZ 1000 | AS 1000 | CT 1000<br>CK 1000<br>FD 750 | GN 750<br>CM 1000<br>CD 1000 | AG 750 | CPH 1700<br>CP 2000 | CS 1800 |
| SERIES | MINI | COMPACT HEIGHT | THREADED | LOW PROFILE | HEAVY DUTY | ISO | HEAVY LOAD | POWER COMPACT STROKE |

# APFA 150

ISO

| | | | | | |
|---|---|---|---|---|---|
| BMW | B2 4006 | | | PSA | E24.54.815.G |
| MB | B8 3180 220 000 001 | GM | 90.25 | RENAULT | EM24.54.700 |
| VW | 39D 878 | | | | |

AZOL GAS

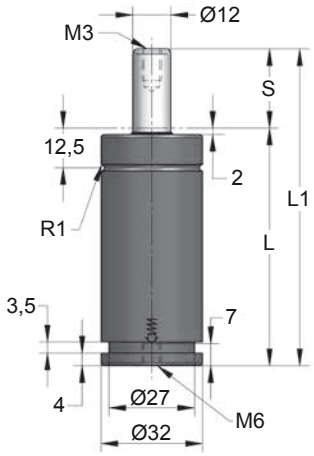


| CODE | S (mm) | L1 ±0,25 (mm) | L (mm) | Kg. |
|---|---|---|---|---|
| APFA ___ 010 | 10 | 70 | 60 | 0.24 |
| APFA ___ 012 | 12.7 | 75.4 | 62.7 | 0.30 |
| APFA ___ 016 | 16 | 82 | 66 | 0.32 |
| APFA ___ 025 | 25 | 100 | 75 | 0.35 |
| APFA ___ 038 | 38 | 126 | 88 | 0.39 |
| APFA ___ 050 | 50 | 150 | 100 | 0.42 |
| APFA ___ 063 | 63.5 | 177 | 113.5 | 0.48 |
| APFA ___ 080 | 80 | 210 | 130 | 0.54 |
| APFA ___ 100 | 100 | 250 | 150 | 0.59 |
| APFA ___ 125 | 125 | 300 | 175 | 0.68 |

PED · ISO 11901 · VDI 3003 · CNOMO EM.24.54

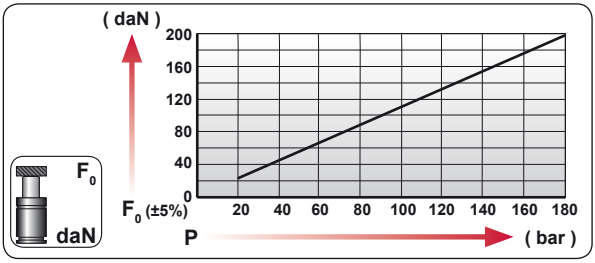


| CODE | COLOR | bar | psi | F0 daN | F1 daN |
|---|---|---|---|---|---|
| APFA 50 050 | Green | 45 | 650 | 50 | 65 |
| APFA 100 050 | Blue | 90 | 1305 | 100 | 130 |
| APFA 150 050 | Red | 135 | 1960 | 150 | 195 |
| APFA 200 050 | Yellow | 180 | 2610 | 200 | 260 |

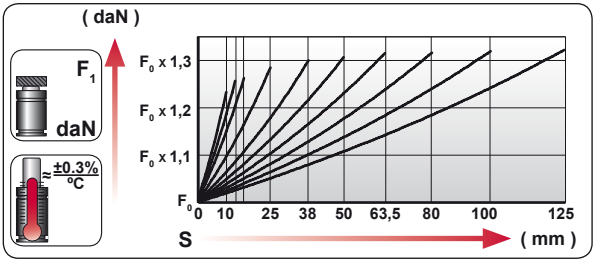


| | |
|---|---|
| ENG | ORDER |
| DEU | BESTELLUNG |
| FRA | COMMANDE |
| ITA | ORDINE |
| ESP | PEDIDO |
| POR | PEDIDO |




APFA 50 50

APFA 50 050

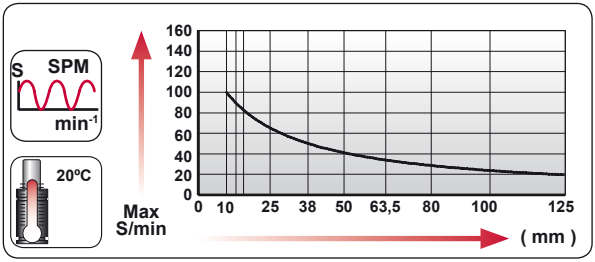


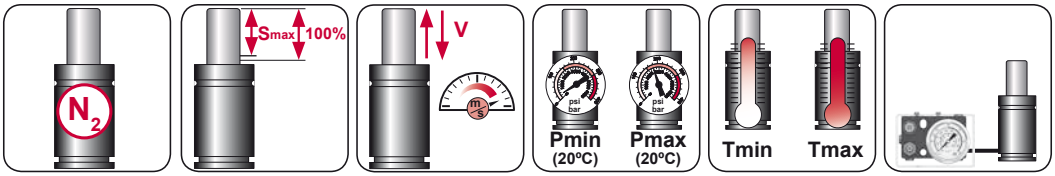


| $N_2$ | Smax < 90% | Vmax 1,6 m/s | bar psi 20 290 | bar psi 180 2610 | ºC ºF 0 32 | ºC ºF 80 176 | |
|---|---|---|---|---|---|---|---|

AZOL GAS

# APFA 150 MOUNTS

ISO

## A14-032

ISO E24.54.815.G EM24.54.700/F

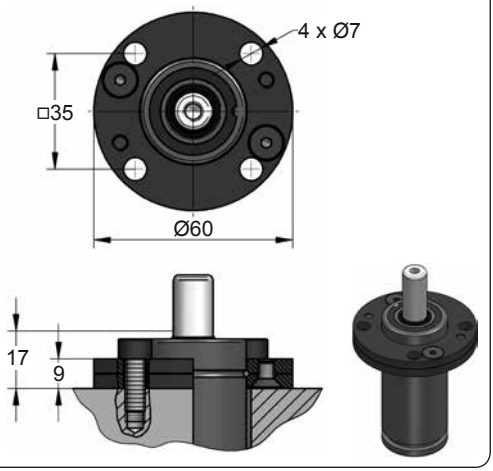


## A34-032

VDI

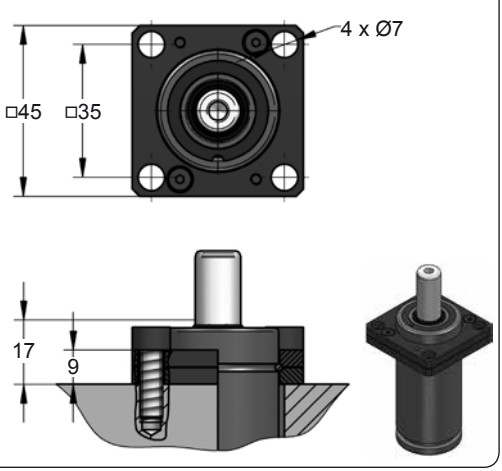


## C20-032

ISO VDI E24.54.815.G EM24.54.700/F

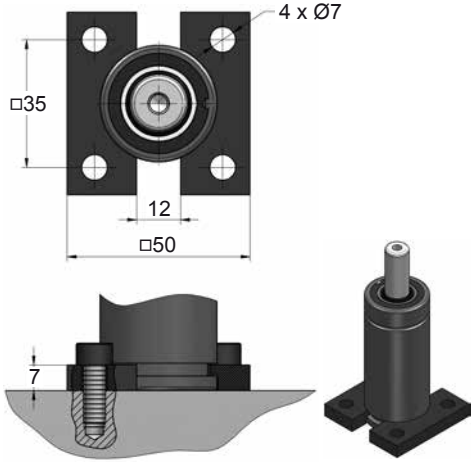


## D02-032

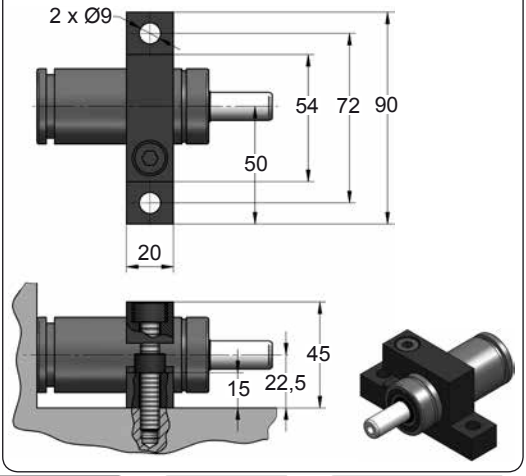









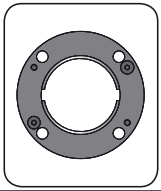

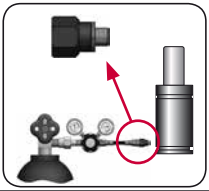

| CODE | | APFA 50 050 | X | A14-032 | 06 GA 11 |
|---|---|---|---|---|---|
| ENG | ORDER | GAS SPRING | REPAIR KIT | FLANGE | CHARGING ADAPTER |
| DEU | BESTELLUNG | GASDRUCKFEDER | ERSATZTEILSATZ | FLANSCHE | LADEADAPTER |
| FRA | COMMANDE | RESSORT À GAZ | KIT DE RÉPARATION | BRIDE | RACCORD DE CHARGE |
| ITA | ORDINE | CILINDRO AD AZOTO | KIT DI MANUTENZIONE | FLANGE | ADATTATORE DI CARICO |
| ESP | PEDIDO | RESORTE DE GAS | KIT DE REPARACION | BRIDA | ADAPTADOR DE CARGA |
| POR | PEDIDO | CILINDRO DE GÁS | KIT DE MANUTENÇÃO | FLANGE | ADAPTADOR DE CARGA |

# APFC-H 150

ISO

AZOL GAS

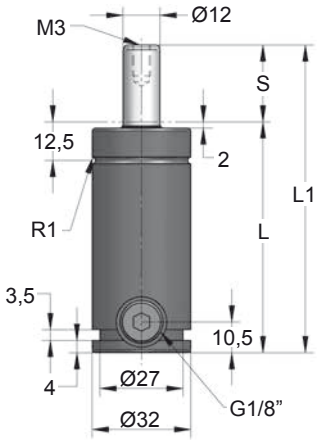


| ORDER | S (mm) | L1 ±0,25 (mm) | L (mm) | Kg. |
|---|---|---|---|---|
| APFC-H 150 010 | 10 | 70 | 60 | 0.24 |
| APFC-H 150 012 | 12.7 | 75.4 | 62.7 | 0.30 |
| APFC-H 150 016 | 16 | 82 | 66 | 0.32 |
| APFC-H 150 025 | 25 | 100 | 75 | 0.35 |
| APFC-H 150 038 | 38 | 126 | 88 | 0.39 |
| APFC-H 150 050 | 50 | 150 | 100 | 0.42 |
| APFC-H 150 063 | 63.5 | 177 | 113.5 | 0.48 |
| APFC-H 150 080 | 80 | 210 | 130 | 0.54 |
| APFC-H 150 100 | 100 | 250 | 150 | 0.59 |
| APFC-H 150 125 | 125 | 300 | 175 | 0.68 |

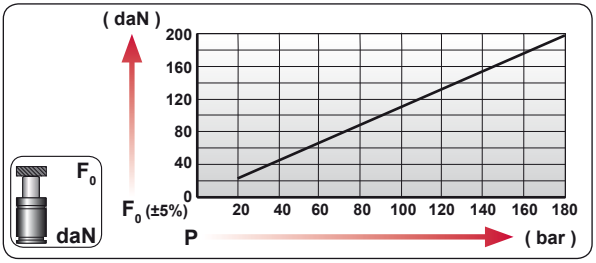


| CODE | bar | psi | F0 daN | F1 daN |
|---|---|---|---|---|
| --------- | --- | --- | --- | --- |
| APFC-H 150 050 | 0 | 0 | --- | --- |

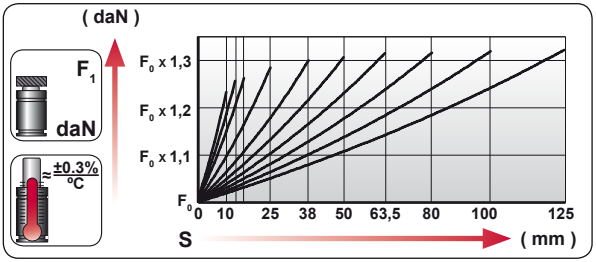


| | |
|---|---|
| ENG | ORDER |
| DEU | BESTELLUNG |
| FRA | COMMANDE |
| ITA | ORDINE |
| ESP | PEDIDO |
| POR | PEDIDO |

F0 daN — S mm

APFC-H 150 50

APFC-H 150 050

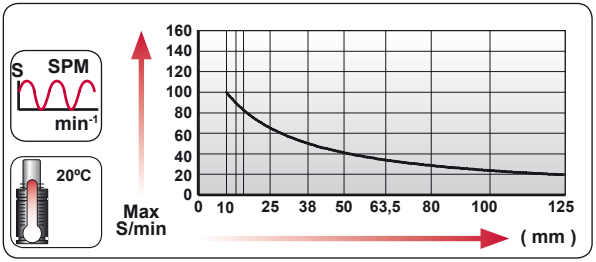


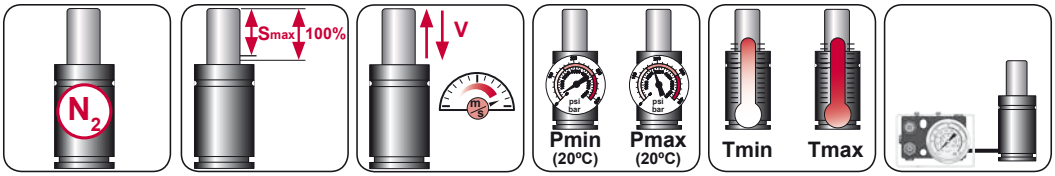


| $N_2$ | Smax < 90% | Vmax 1,6 m/s | bar psi 20 290 | bar psi 180 2610 | ºC ºF 0 32 | ºC ºF 80 176 | 600 CP- |
|---|---|---|---|---|---|---|---|

AZOL GAS

# APFC-H 150 MOUNTS

ISO

## A14-032

ISO E24.54.815.G EM24.54.700/F

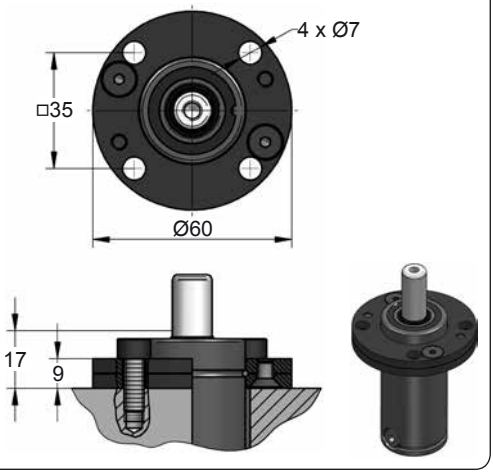


## A34-032

VDI

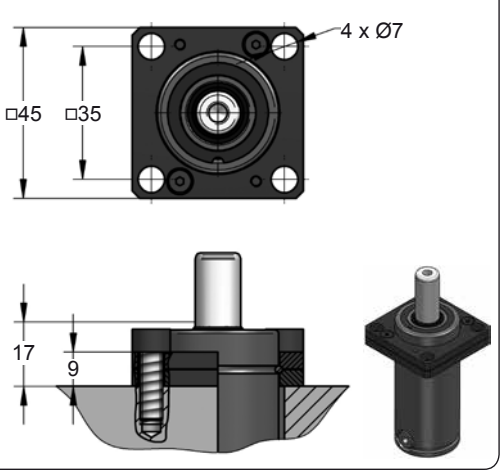


## C05-032

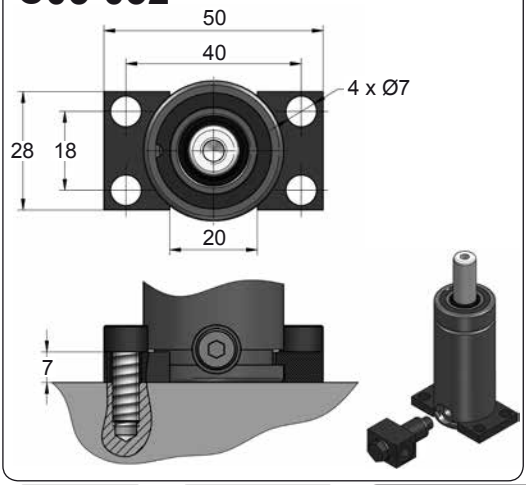


## D02-032

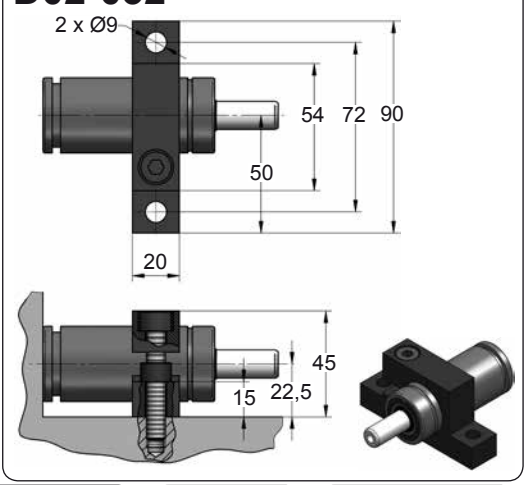









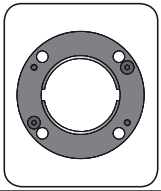

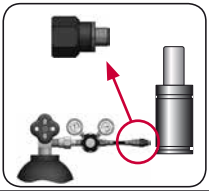

| CODE | | APFC-H 150 050 | KIT XXXXXXX-S<br>KIT XXXXXXX-C | A14-032 | SKK 12R 1/8 |
|---|---|---|---|---|---|
| ENG | ORDER | GAS SPRING | REPAIR KIT | FLANGE | CHARGING ADAPTER |
| DEU | BESTELLUNG | GASDRUCKFEDER | ERSATZTEILSATZ | FLANSCHE | LADEADAPTER |
| FRA | COMMANDE | RESSORT À GAZ | KIT DE RÉPARATION | BRIDE | RACCORD DE CHARGE |
| ITA | ORDINE | CILINDRO AD AZOTO | KIT DI MANUTENZIONE | FLANGE | ADATTATORE DI CARICO |
| ESP | PEDIDO | RESORTE DE GAS | KIT DE REPARACION | BRIDA | ADAPTADOR DE CARGA |
| POR | PEDIDO | CILINDRO DE GÁS | KIT DE MANUTENÇÃO | FLANGE | ADAPTADOR DE CARGA |

# APFA 250

ISO

| | | | | | |
|---|---|---|---|---|---|
| **BMW** | B2 4006 | **FORD** | W-DX35-6203 | **PSA** | E24.54.815.G |
| | | **GM** | 90.25 | **RENAULT** | EM24.54.700 |
| **VW** | 39D 878 | | | **NISSAN** | K32S0 |

AZOL GAS

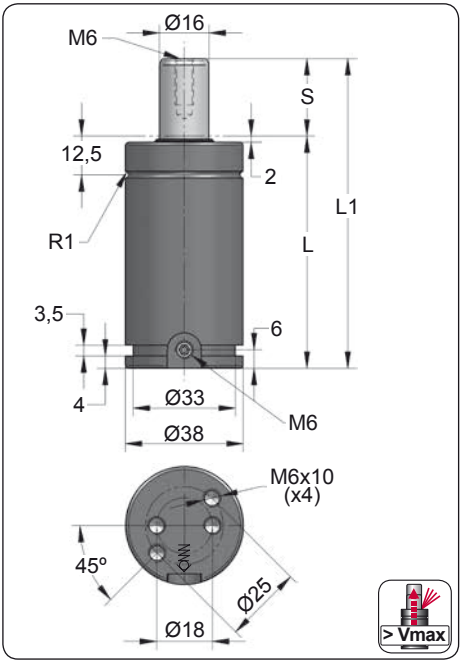


| CODE | S (mm) | L1 ±0,25 (mm) | L (mm) | Kg. |
|---|---|---|---|---|
| APFA 250 010 | 10 | 70 | 60 | 0.41 |
| APFA 250 012 | 12.7 | 75.4 | 62.7 | 0.43 |
| APFA 250 016 | 16 | 82 | 66 | 0.45 |
| APFA 250 019 | 19 | 88 | 69 | 0.47 |
| APFA 250 025 | 25 | 100 | 75 | 0.50 |
| APFA 250 038 | 38 | 126 | 88 | 0.58 |
| APFA 250 050 | 50 | 150 | 100 | 0.65 |
| APFA 250 063 | 63.5 | 177 | 113.5 | 0.73 |
| APFA 250 080 | 80 | 210 | 130 | 0.83 |
| APFA 250 100 | 100 | 250 | 150 | 0.95 |
| APFA 250 125 | 125 | 300 | 175 | 1.10 |

PED · ISO 11901 · NAAMS · VDI 3003 · CNOMO EM.24.54

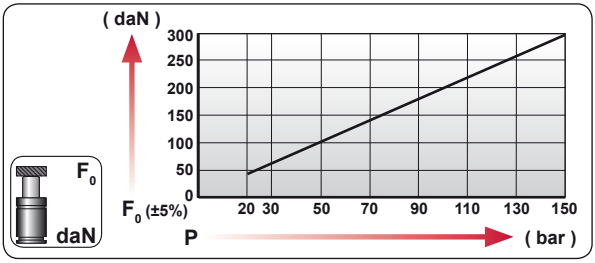


| CODE | bar | psi | $F_0$ daN | $F_1$ daN |
|---|---|---|---|---|
| APFA 250 050 | 125 | 1810 | 250 | 360 |
| APFA-H 250 050 | 0 | 0 | --- | --- |

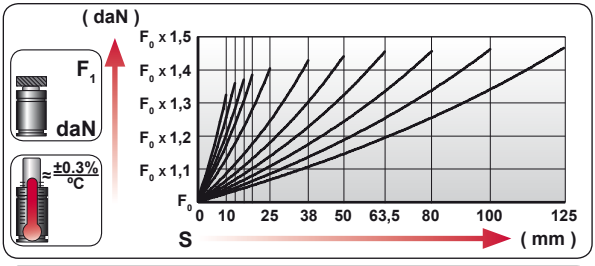


| | |
|---|---|
| ENG | ORDER |
| DEU | BESTELLUNG |
| FRA | COMMANDE |
| ITA | ORDINE |
| ESP | PEDIDO |
| POR | PEDIDO |




APFA 250 50

APFA 250 050

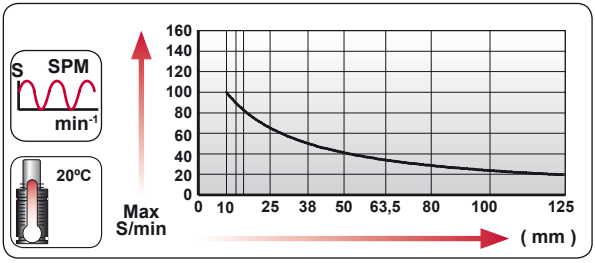


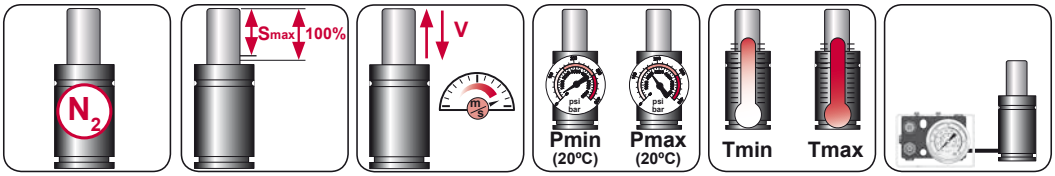


| $N_2$ | Smax < 90% | Vmax 1,6 m/s | bar psi 20 290 | bar psi 150 2175 | °C °F 0 32 | °C °F 80 176 | 600 CP- |
|---|---|---|---|---|---|---|---|

AZOL GAS

# APFA 250 MOUNTS

ISO

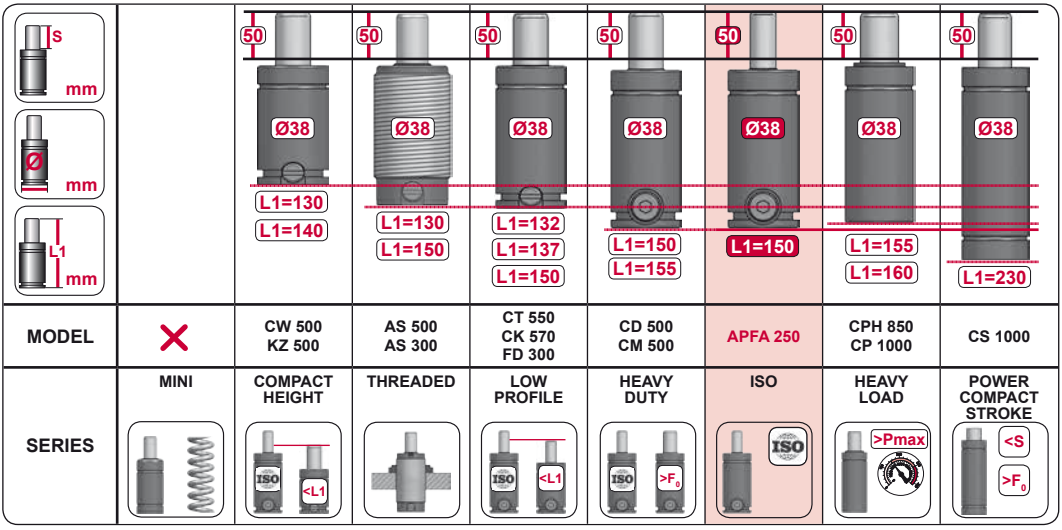


| MODEL | | CW 500 KZ 500 | AS 500 AS 300 | CT 550 CK 570 FD 300 | CD 500 CM 500 | APFA 250 | CPH 850 CP 1000 | CS 1000 |
|---|---|---|---|---|---|---|---|---|
| SERIES | MINI | COMPACT HEIGHT | THREADED | LOW PROFILE | HEAVY DUTY | ISO | HEAVY LOAD | POWER COMPACT STROKE |

## A14-038

ISO E24.54.815.G EM24.54.700/F

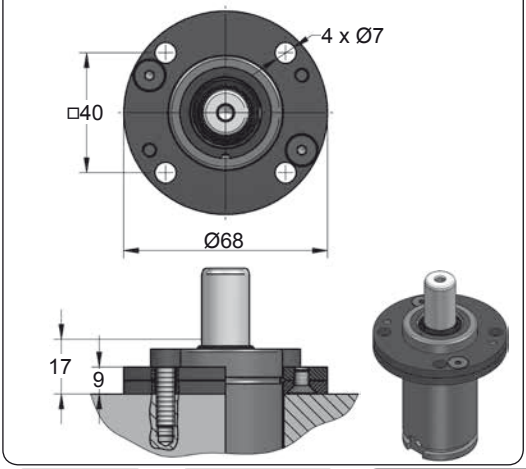


## A34-038

ISO VDI

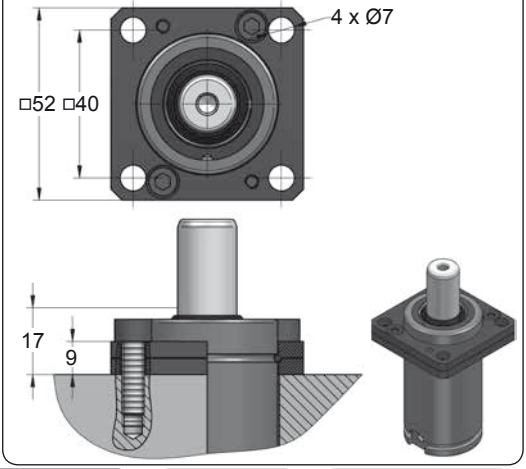









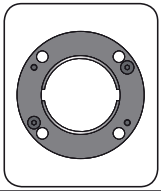

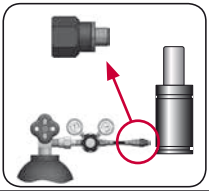

| CODE | | APFA 250 050 | KIT XXXXXXX-S KIT XXXXXXX-C | A14-038 | 06 GA 11 |
|---|---|---|---|---|---|
| ENG | ORDER | GAS SPRING | REPAIR KIT | FLANGE | CHARGING ADAPTER |
| DEU | BESTELLUNG | GASDRUCKFEDER | ERSATZTEILSATZ | FLANSCHE | LADEADAPTER |
| FRA | COMMANDE | RESSORT À GAZ | KIT DE RÉPARATION | BRIDE | RACCORD DE CHARGE |
| ITA | ORDINE | CILINDRO AD AZOTO | KIT DI MANUTENZIONE | FLANGE | ADATTATORE DI CARICO |
| ESP | PEDIDO | RESORTE DE GAS | KIT DE REPARACION | BRIDA | ADAPTADOR DE CARGA |
| POR | PEDIDO | CILINDRO DE GÁS | KIT DE MANUTENÇÃO | FLANGE | ADAPTADOR DE CARGA |

# APFA 250 MOUNTS

ISO

AZOL GAS

## B76-038

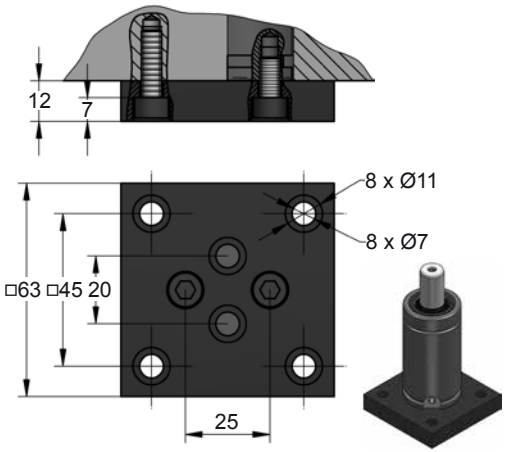


## C05-038

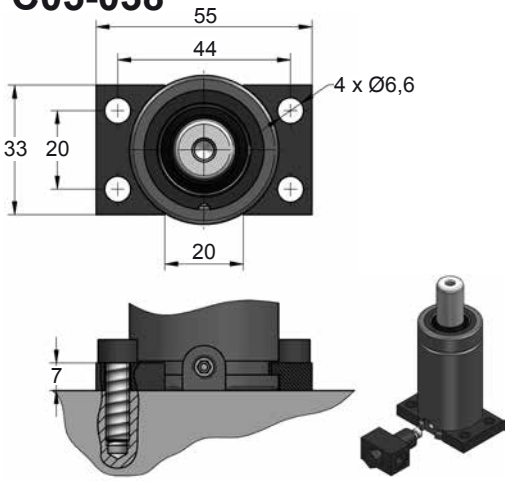


## C20-038

E24.54.815.G
EM24.54.700/F

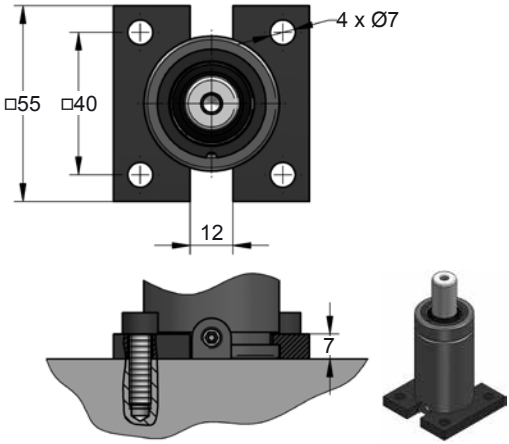





| CODE | | APFA 250 050 | KIT XXXXXXX-S<br>KIT XXXXXXX-C | B76-038 | 06 GA 11 |
|---|---|---|---|---|---|
| ENG | ORDER | GAS SPRING | REPAIR KIT | FLANGE | CHARGING ADAPTER |
| DEU | BESTELLUNG | GASDRUCKFEDER | ERSATZTEILSATZ | FLANSCHE | LADEADAPTER |
| FRA | COMMANDE | RESSORT À GAZ | KIT DE RÉPARATION | BRIDE | RACCORD DE CHARGE |
| ITA | ORDINE | CILINDRO AD AZOTO | KIT DI MANUTENZIONE | FLANGE | ADATTATORE DI CARICO |
| ESP | PEDIDO | RESORTE DE GAS | KIT DE REPARACION | BRIDA | ADAPTADOR DE CARGA |
| POR | PEDIDO | CILINDRO DE GÁS | KIT DE MANUTENÇÃO | FLANGE | ADAPTADOR DE CARGA |

AZOL GAS

# APFA 250 MOUNTS

ISO

## D02-038

E24.54.815.G

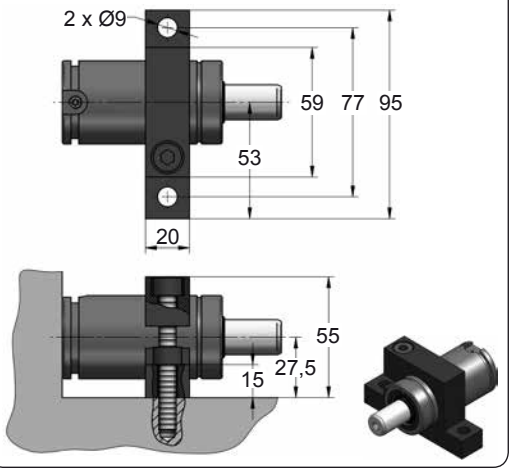


## D67-038

VDI

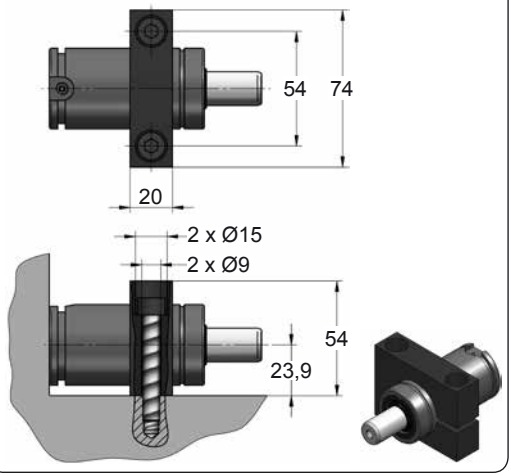




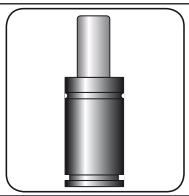




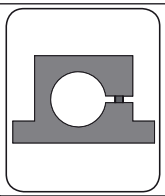

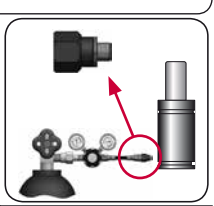

| CODE | | APFA 250 050 | KIT XXXXXXX-S<br>KIT XXXXXXX-C | D02-038 | 06 GA 11 |
|---|---|---|---|---|---|
| ENG | ORDER | GAS SPRING | REPAIR KIT | FLANGE | CHARGING ADAPTER |
| DEU | BESTELLUNG | GASDRUCKFEDER | ERSATZTEILSATZ | FLANSCHE | LADEADAPTER |
| FRA | COMMANDE | RESSORT À GAZ | KIT DE RÉPARATION | BRIDE | RACCORD DE CHARGE |
| ITA | ORDINE | CILINDRO AD AZOTO | KIT DI MANUTENZIONE | FLANGE | ADATTATORE DI CARICO |
| ESP | PEDIDO | RESORTE DE GAS | KIT DE REPARACION | BRIDA | ADAPTADOR DE CARGA |
| POR | PEDIDO | CILINDRO DE GÁS | KIT DE MANUTENÇÃO | FLANGE | ADAPTADOR DE CARGA |

# APFC-H 250

ISO

AZOL GAS

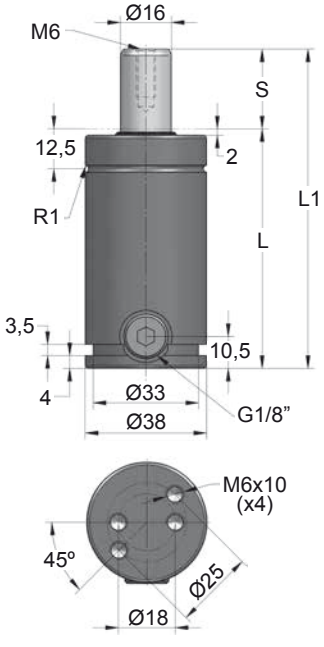


| ORDER | S (mm) | L1 ±0,25 (mm) | L (mm) | Kg. |
|---|---|---|---|---|
| APFC-H 250 010 | 10 | 70 | 60 | 0.41 |
| APFC-H 250 012 | 12.7 | 75.4 | 62.7 | 0.43 |
| APFC-H 250 016 | 16 | 82 | 66 | 0.45 |
| APFC-H 250 019 | 19 | 88 | 69 | 0.47 |
| APFC-H 250 025 | 25 | 100 | 75 | 0.50 |
| APFC-H 250 038 | 38 | 126 | 88 | 0.58 |
| APFC-H 250 050 | 50 | 150 | 100 | 0.65 |
| APFC-H 250 063 | 63.5 | 177 | 113.5 | 0.73 |
| APFC-H 250 080 | 80 | 210 | 130 | 0.83 |
| APFC-H 250 100 | 100 | 250 | 150 | 0.95 |
| APFC-H 250 125 | 125 | 300 | 175 | 1.10 |

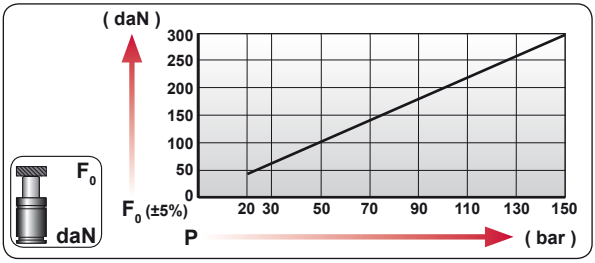


| CODE | bar | psi | F0 daN | F1 daN |
|---|---|---|---|---|
| --------- | --- | --- | --- | --- |
| APFC-H 250 050 | 0 | 0 | --- | --- |

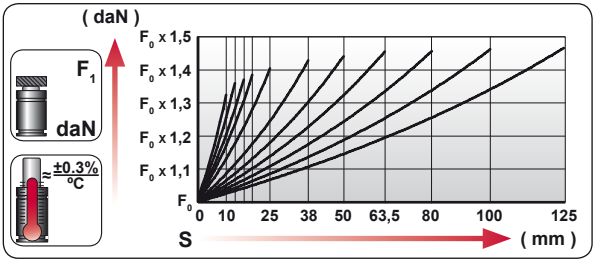


| | ENG | ORDER |
|---|---|---|
| | DEU | BESTELLUNG |
| | FRA | COMMANDE |
| | ITA | ORDINE |
| | ESP | PEDIDO |
| | POR | PEDIDO |

F0 daN — S mm

APFC-H 250 50

APFC-H 250 050

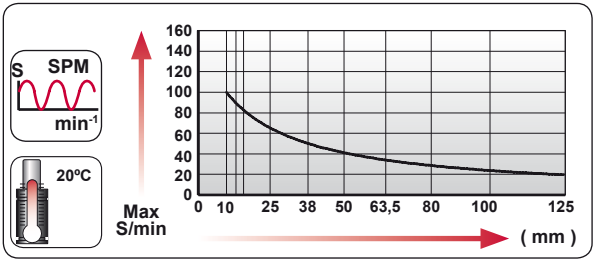


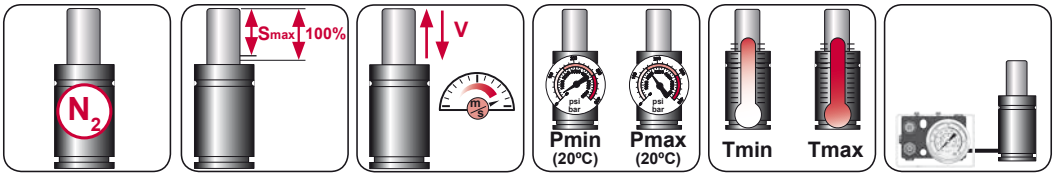


| $N_2$ | Smax < 90% | Vmax 1,6 m/s | bar psi 20 290 | bar psi 150 2175 | ºC ºF 0 32 | ºC ºF 80 176 | 600 CP- |
|---|---|---|---|---|---|---|---|

AZOL GAS

# APFC-H 250 MOUNTS

## A14-038

ISO E24.54.815.G EM24.54.700/F

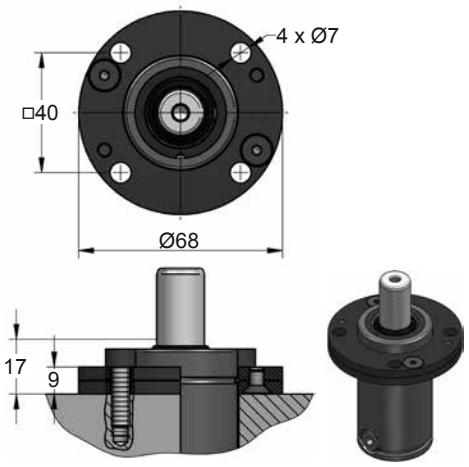


## A34-038

ISO VDI

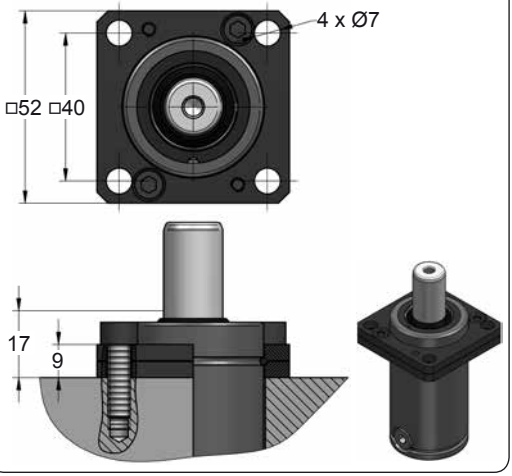


## B76-038

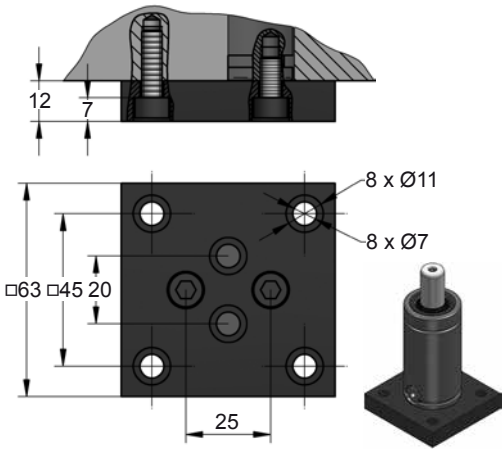


## C05-038

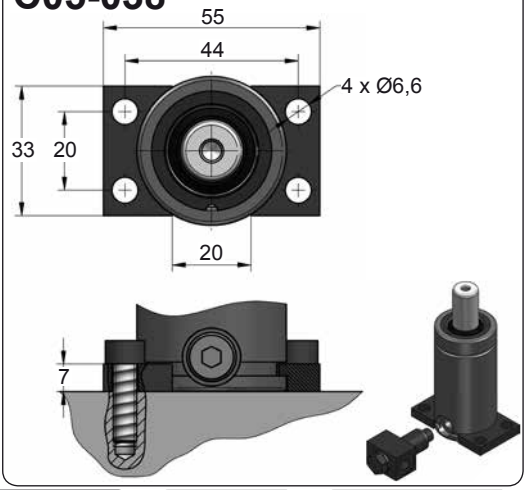





| CODE | | APFC-H 250 050 | KIT XXXXXXX-S<br>KIT XXXXXXX-C | A14-038 | SKK 12R 1/8 |
|---|---|---|---|---|---|
| ENG | ORDER | GAS SPRING | REPAIR KIT | FLANGE | CHARGING ADAPTER |
| DEU | BESTELLUNG | GASDRUCKFEDER | ERSATZTEILSATZ | FLANSCHE | LADEADAPTER |
| FRA | COMMANDE | RESSORT À GAZ | KIT DE RÉPARATION | BRIDE | RACCORD DE CHARGE |
| ITA | ORDINE | CILINDRO AD AZOTO | KIT DI MANUTENZIONE | FLANGE | ADATTATORE DI CARICO |
| ESP | PEDIDO | RESORTE DE GAS | KIT DE REPARACION | BRIDA | ADAPTADOR DE CARGA |
| POR | PEDIDO | CILINDRO DE GÁS | KIT DE MANUTENÇÃO | FLANGE | ADAPTADOR DE CARGA |

# APF 500

ISO

| | | | | | |
|---|---|---|---|---|---|
| BMW | B2 4006 | | | PSA | E24.54.815.G |
| MB | B8 3180 220 000 001 | GM | 90.25 | RENAULT | EM24.54.700 |
| VW | 39D 878 | | | NISSAN | K32S0 |

AZOL GAS

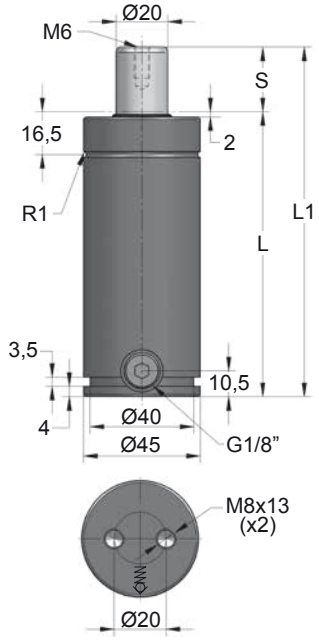


| ORDER | S (mm) | L1 ±0,25 (mm) | L (mm) | Kg. |
|---|---|---|---|---|
| APF 500 010 | 10 | 105 | 95 | 0.93 |
| APF 500 012 | 12.7 | 110.4 | 97.7 | 0.95 |
| APF 500 016 | 16 | 117 | 101 | 0.99 |
| APF 500 025 | 25 | 135 | 110 | 1.00 |
| APF 500 038 | 38 | 161 | 123 | 1.11 |
| APF 500 050 | 50 | 185 | 135 | 1.15 |
| APF 500 063 | 63.5 | 212 | 148.5 | 1.23 |
| APF 500 080 | 80 | 245 | 165 | 1.38 |
| APF 500 100 | 100 | 285 | 185 | 1.26 |
| APF 500 125 | 125 | 335 | 210 | 1.60 |
| APF 500 160 | 160 | 405 | 245 | 1.88 |

PED 2014/68/UE

ISO 11901

VDI 3003

CNOMO EM.24.54

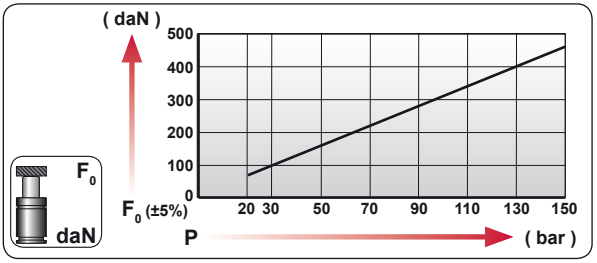


| CODE | bar | psi | $F_0$ daN | $F_1$ daN |
|---|---|---|---|---|
| APF 500 050 | 150 | 2175 | 470 | 615 |
| APF-H 500 050 | 0 | 0 | --- | --- |

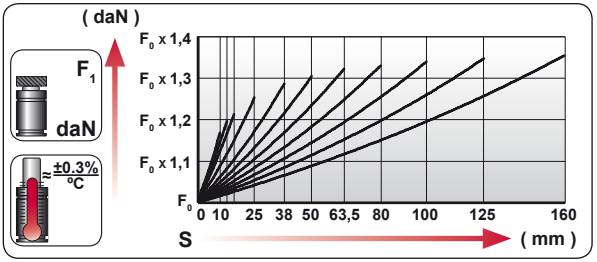


| | |
|---|---|
| ENG | ORDER |
| DEU | BESTELLUNG |
| FRA | COMMANDE |
| ITA | ORDINE |
| ESP | PEDIDO |
| POR | PEDIDO |

$F_0$ daN — S mm

APF 500 50

APF 500 050

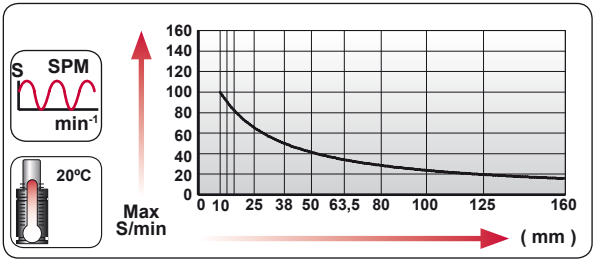


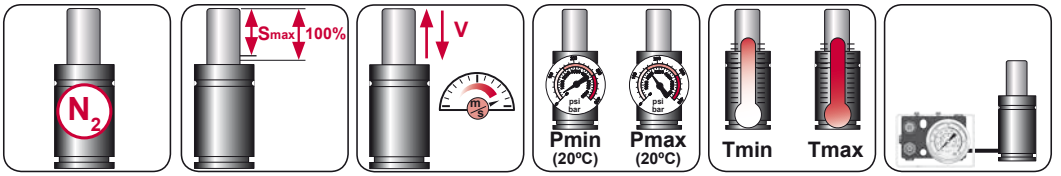


| $N_2$ | Smax < 90% | Vmax 1,6 m/s | bar psi 20 290 | bar psi 150 2175 | °C °F 0 32 | °C °F 80 176 | 600 CP- |
|---|---|---|---|---|---|---|---|

AZOL GAS

# APF 500 MOUNTS

ISO

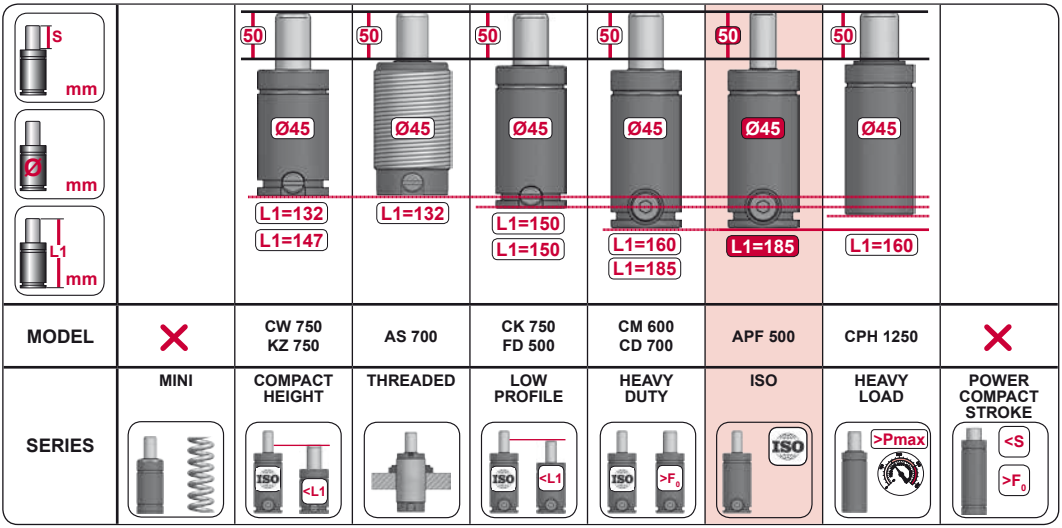


| MODEL | | CW 750 KZ 750 | AS 700 | CK 750 FD 500 | CM 600 CD 700 | APF 500 | CPH 1250 | |
|---|---|---|---|---|---|---|---|---|
| SERIES | MINI | COMPACT HEIGHT | THREADED | LOW PROFILE | HEAVY DUTY | ISO | HEAVY LOAD | POWER COMPACT STROKE |

## A14-045

ISO · E24.54.815.G · EM24.54.700/F

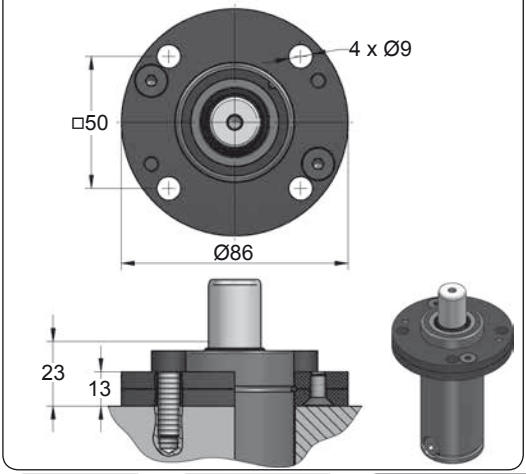


## A34-045

ISO · VDI

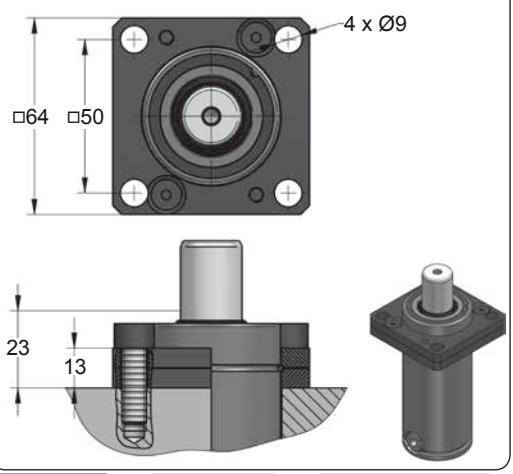









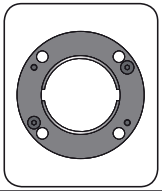

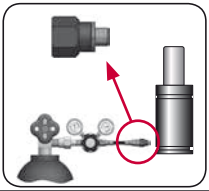

| CODE | | APF 500 050 | KIT XXXXXXX-S KIT XXXXXXX-C | A14-045 | 18 GA 5 |
|---|---|---|---|---|---|
| ENG | ORDER | GAS SPRING | REPAIR KIT | FLANGE | CHARGING ADAPTER |
| DEU | BESTELLUNG | GASDRUCKFEDER | ERSATZTEILSATZ | FLANSCHE | LADEADAPTER |
| FRA | COMMANDE | RESSORT À GAZ | KIT DE RÉPARATION | BRIDE | RACCORD DE CHARGE |
| ITA | ORDINE | CILINDRO AD AZOTO | KIT DI MANUTENZIONE | FLANGE | ADATTATORE DI CARICO |
| ESP | PEDIDO | RESORTE DE GAS | KIT DE REPARACION | BRIDA | ADAPTADOR DE CARGA |
| POR | PEDIDO | CILINDRO DE GÁS | KIT DE MANUTENÇÃO | FLANGE | ADAPTADOR DE CARGA |

# APF 500 MOUNTS

ISO

AZOL GAS

## B21-045

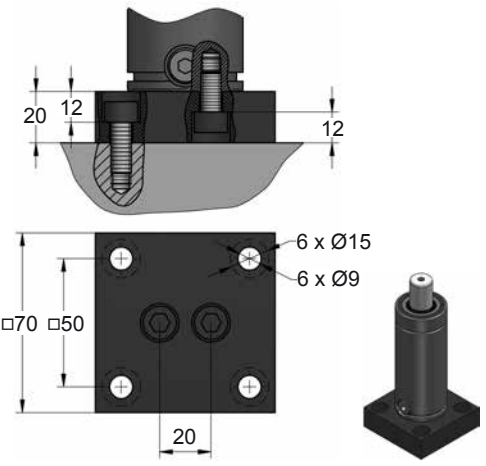


## B76-045

ISO E24.54.815.G

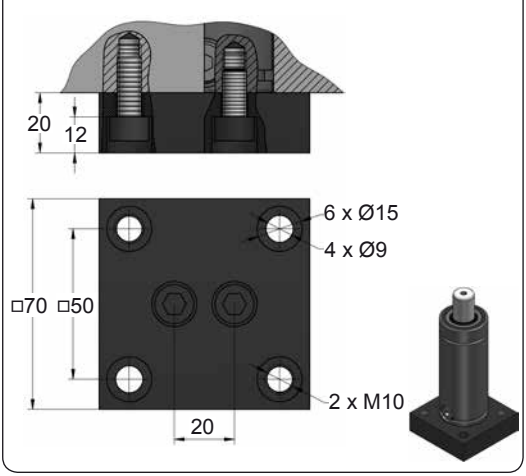


## C05-045

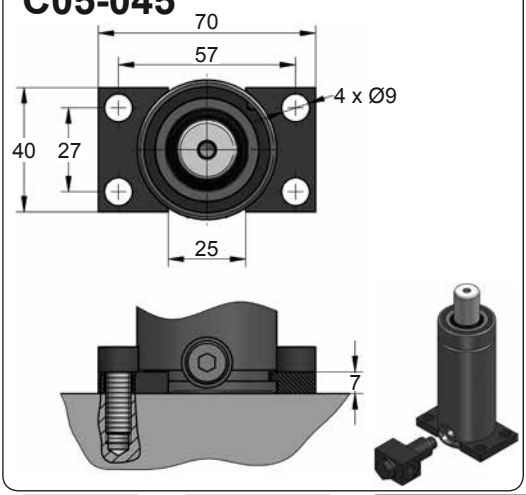


## C20-045

ISO VDI E24.54.815.G EM24.54.700/F

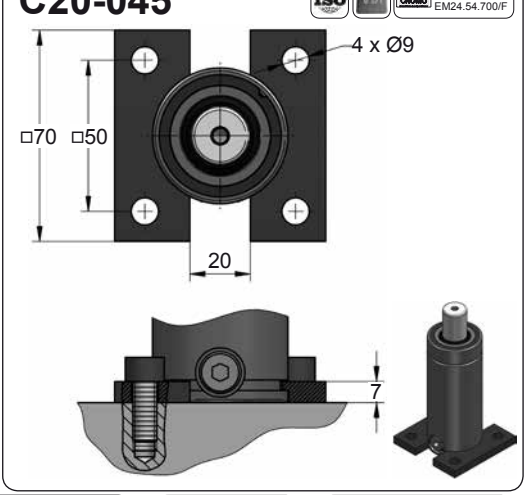









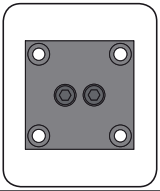

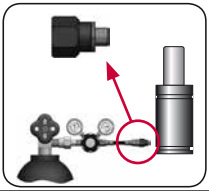

| CODE | | APF 500 050 | KIT XXXXXXX-S<br>KIT XXXXXXX-C | B21-045 | 18 GA 5 |
|---|---|---|---|---|---|
| ENG | ORDER | GAS SPRING | REPAIR KIT | FLANGE | CHARGING ADAPTER |
| DEU | BESTELLUNG | GASDRUCKFEDER | ERSATZTEILSATZ | FLANSCHE | LADEADAPTER |
| FRA | COMMANDE | RESSORT À GAZ | KIT DE RÉPARATION | BRIDE | RACCORD DE CHARGE |
| ITA | ORDINE | CILINDRO AD AZOTO | KIT DI MANUTENZIONE | FLANGE | ADATTATORE DI CARICO |
| ESP | PEDIDO | RESORTE DE GAS | KIT DE REPARACION | BRIDA | ADAPTADOR DE CARGA |
| POR | PEDIDO | CILINDRO DE GÁS | KIT DE MANUTENÇÃO | FLANGE | ADAPTADOR DE CARGA |

AZOL GAS

# APF 500 MOUNTS

ISO

## D02-045

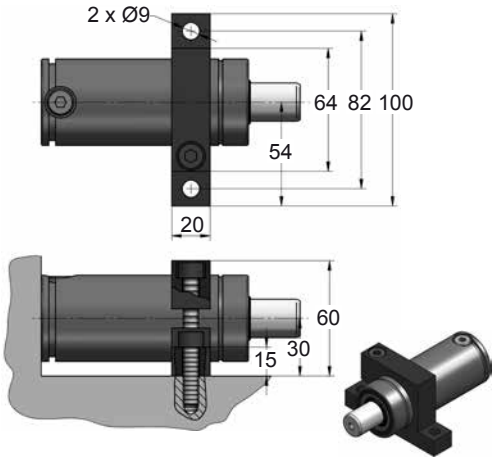


## D67-045

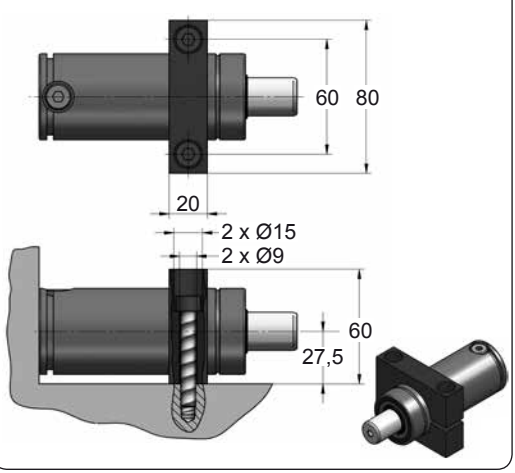









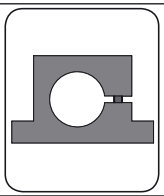

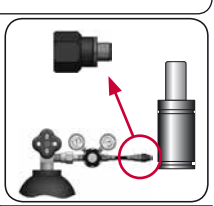

| CODE | | APF 500 050 | KIT XXXXXXX-S<br>KIT XXXXXXX-C | D02-045 | 18 GA 5 |
|---|---|---|---|---|---|
| ENG | ORDER | GAS SPRING | REPAIR KIT | FLANGE | CHARGING ADAPTER |
| DEU | BESTELLUNG | GASDRUCKFEDER | ERSATZTEILSATZ | FLANSCHE | LADEADAPTER |
| FRA | COMMANDE | RESSORT À GAZ | KIT DE RÉPARATION | BRIDE | RACCORD DE CHARGE |
| ITA | ORDINE | CILINDRO AD AZOTO | KIT DI MANUTENZIONE | FLANGE | ADATTATORE DI CARICO |
| ESP | PEDIDO | RESORTE DE GAS | KIT DE REPARACION | BRIDA | ADAPTADOR DE CARGA |
| POR | PEDIDO | CILINDRO DE GÁS | KIT DE MANUTENÇÃO | FLANGE | ADAPTADOR DE CARGA |

# AG 750

ISO

| | | | | | |
|---|---|---|---|---|---|
| BMW | B2 4006 | FORD | W-DX35-6203 | PSA | E24.54.815.G |
| MB | B8 3180 220 000 001 | GM | 90.25 | RENAULT | EM24.54.700 |
| VW | 39D 878 | | | NISSAN | K32S0 |

AZOL GAS

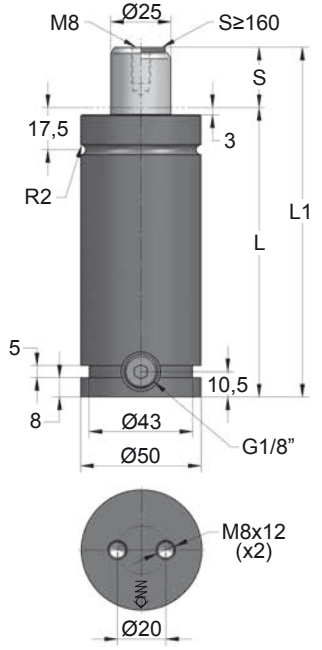


| ORDER | S (mm) | L1 ±0,25 (mm) | L (mm) | Kg. |
|---|---|---|---|---|
| AG 750 012 | 12.7 | 120.4 | 107.7 | 1.20 |
| AG 750 025 | 25 | 145 | 120 | 1.42 |
| AG 750 038 | 38 | 171 | 133 | 1.50 |
| AG 750 050 | 50 | 195 | 145 | 1.60 |
| AG 750 063 | 63.5 | 222 | 158.5 | 1.70 |
| AG 750 080 | 80 | 255 | 175 | 1.90 |
| AG 750 100 | 100 | 295 | 195 | 2.14 |
| AG 750 125 | 125 | 345 | 220 | 2.30 |
| AG 750 160 * | 160 | 415 | 255 | 2.58 |
| AG 750 200 * | 200 | 495 | 295 | 2.92 |
| AG 750 250 * | 250 | 595 | 345 | 3.37 |
| AG 750 300 * | 300 | 695 | 395 | 3.82 |

PED 97/23/CE · ISO 11901 · NAAMS · VDI 3003 · CNOMO EM.24.54

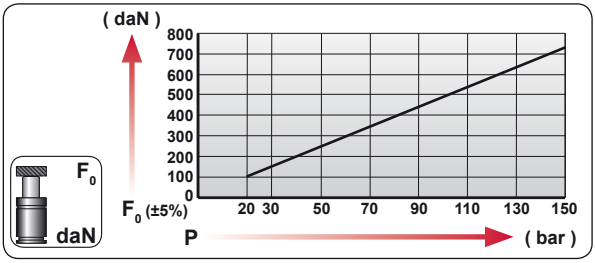


| CODE | bar | psi | F0 daN | F1 daN |
|---|---|---|---|---|
| AG 750 050 | 150 | 2175 | 740 | 1100 |
| AG-H 750 050 | 0 | 0 | --- | --- |

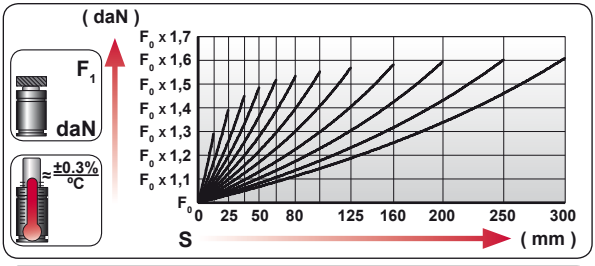


| ENG | ORDER |
|---|---|
| DEU | BESTELLUNG |
| FRA | COMMANDE |
| ITA | ORDINE |
| ESP | PEDIDO |
| POR | PEDIDO |

F0 daN · S mm

AG 750 50

AG 750 050

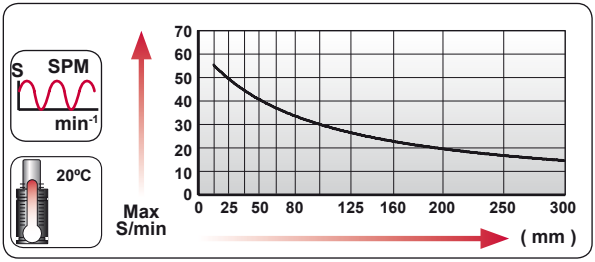


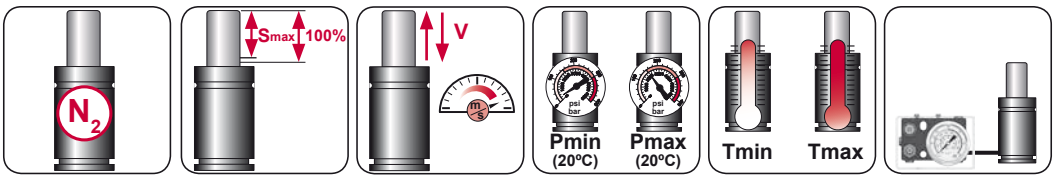


| $N_2$ | Smax < 90% | Vmax 2 m/s | bar psi 20 290 | bar psi 150 2175 | ºC ºF 0 32 | ºC ºF 80 176 | 600 CP- |
|---|---|---|---|---|---|---|---|

# AZOL GAS AGB-H 750

ISO

| | | |
|---|---|---|
| | | |
| | | RENAULT EM24.54.700 |
| | | |

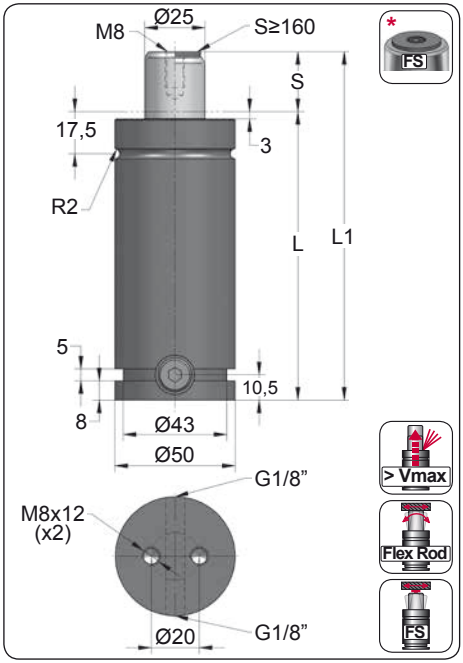


| ORDER | S (mm) | L1 ±0,25 (mm) | L (mm) | Kg. |
|---|---|---|---|---|
| AGB-H 750 012 | 12.7 | 120.4 | 107.7 | 1.20 |
| AGB-H 750 025 | 25 | 145 | 120 | 1.42 |
| AGB-H 750 038 | 38 | 171 | 133 | 1.50 |
| AGB-H 750 050 | 50 | 195 | 145 | 1.60 |
| AGB-H 750 063 | 63.5 | 222 | 158.5 | 1.70 |
| AGB-H 750 080 | 80 | 255 | 175 | 1.90 |
| AGB-H 750 100 | 100 | 295 | 195 | 2.14 |
| AGB-H 750 125 | 125 | 345 | 220 | 2.30 |
| AGB-H 750 160 * | 160 | 415 | 255 | 2.58 |
| AGB-H 750 200 * | 200 | 495 | 295 | 2.92 |
| AGB-H 750 250 * | 250 | 595 | 345 | 3.37 |
| AGB-H 750 300 * | 300 | 695 | 395 | 3.82 |

| CODE | bar | psi | $F_0$ daN | $F_1$ daN |
|---|---|---|---|---|
| --------- | --- | --- | --- | --- |
| AGB-H 750 050 | 0 | 0 | --- | --- |

## AG



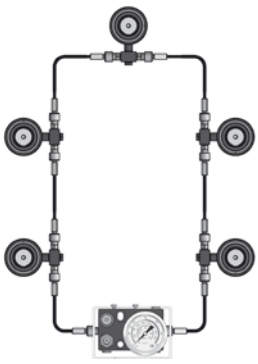

## AGB-H



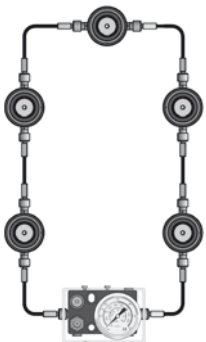



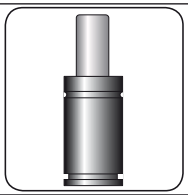




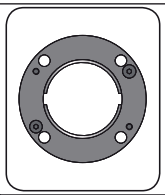

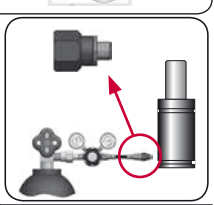

| CODE | AG 750 050<br>AGB-H 750 050 | KIT XXXXXXX-S<br>KIT XXXXXXX-C | A14-050 | 18 GA 5<br>SKK 12R 1/8 |
|---|---|---|---|---|
| ENG ORDER | GAS SPRING | REPAIR KIT | FLANGE | CHARGING ADAPTER |
| DEU BESTELLUNG | GASDRUCKFEDER | ERSATZTEILSATZ | FLANSCHE | LADEADAPTER |
| FRA COMMANDE | RESSORT À GAZ | KIT DE RÉPARATION | BRIDE | RACCORD DE CHARGE |
| ITA ORDINE | CILINDRO AD AZOTO | KIT DI MANUTENZIONE | FLANGE | ADATTATORE DI CARICO |
| ESP PEDIDO | RESORTE DE GAS | KIT DE REPARACION | BRIDA | ADAPTADOR DE CARGA |
| POR PEDIDO | CILINDRO DE GÁS | KIT DE MANUTENÇÃO | FLANGE | ADAPTADOR DE CARGA |

# AG 750 MOUNTS

ISO

AZOL GAS

## A14-050

E24.54.815.G
EM24.54.700/F

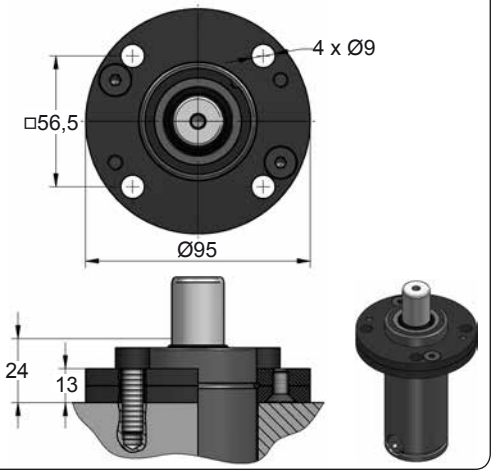


## A34-050

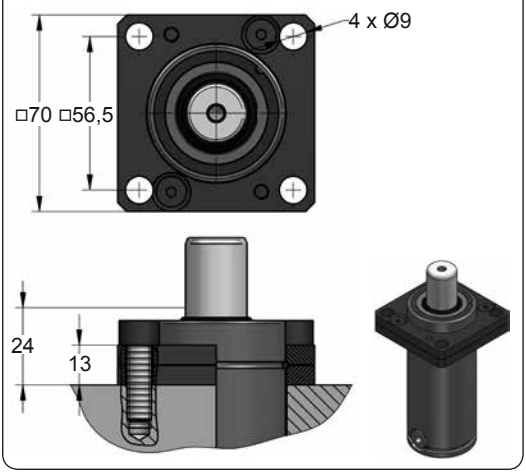


## B21-050

EM24.54.700/F

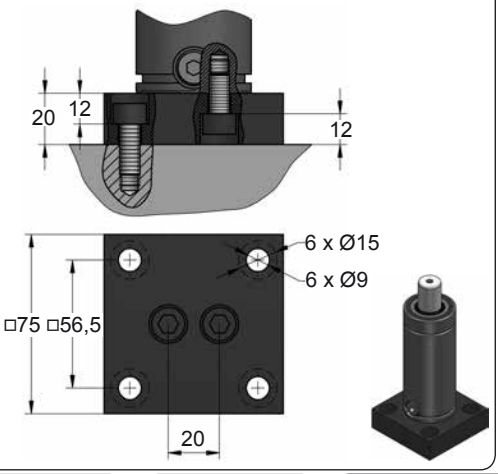


## B76-050

E24.54.815.G
EM24.54.700/F

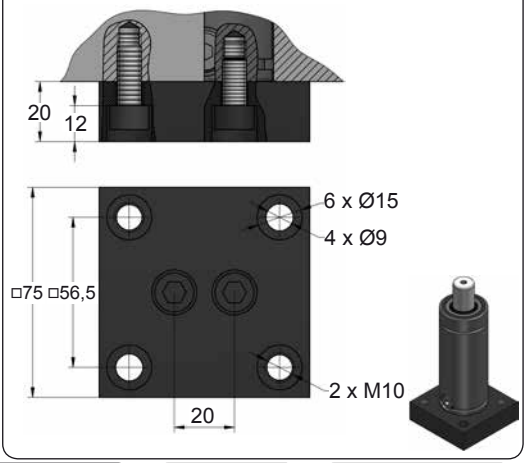




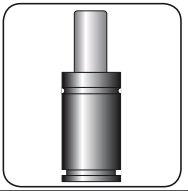




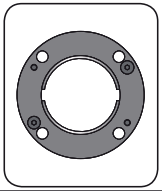

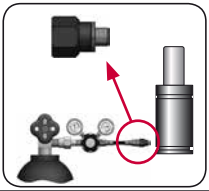

| CODE | | AG 750 050 | KIT XXXXXXX-S<br>KIT XXXXXXX-C | A14-050 | 18 GA 5 |
|---|---|---|---|---|---|
| ENG | ORDER | GAS SPRING | REPAIR KIT | FLANGE | CHARGING ADAPTER |
| DEU | BESTELLUNG | GASDRUCKFEDER | ERSATZTEILSATZ | FLANSCHE | LADEADAPTER |
| FRA | COMMANDE | RESSORT À GAZ | KIT DE RÉPARATION | BRIDE | RACCORD DE CHARGE |
| ITA | ORDINE | CILINDRO AD AZOTO | KIT DI MANUTENZIONE | FLANGE | ADATTATORE DI CARICO |
| ESP | PEDIDO | RESORTE DE GAS | KIT DE REPARACION | BRIDA | ADAPTADOR DE CARGA |
| POR | PEDIDO | CILINDRO DE GÁS | KIT DE MANUTENÇÃO | FLANGE | ADAPTADOR DE CARGA |

AZOL GAS

# AG 750 MOUNTS

ISO

## C05-050

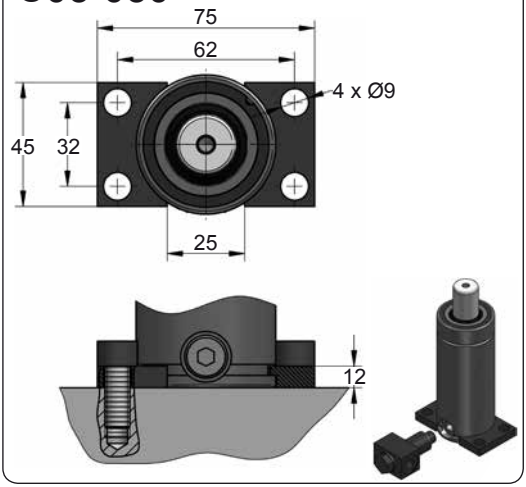


## C20-050

ISO VDI E24.54.815.G EM24.54.700/F

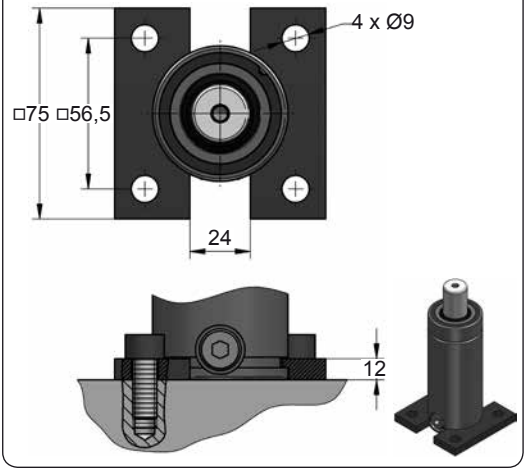


## D02-050

ISO E24.54.815.G EM24.54.700/F

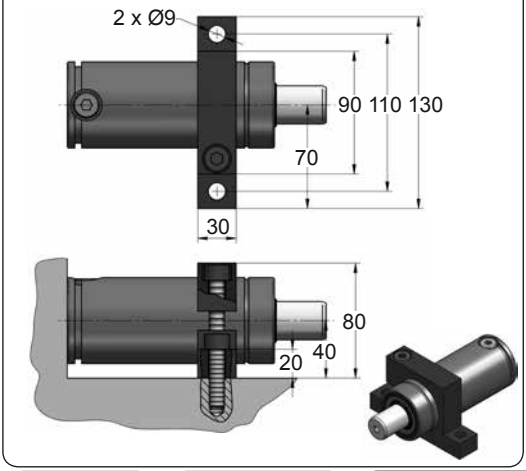


## D67-050

VDI

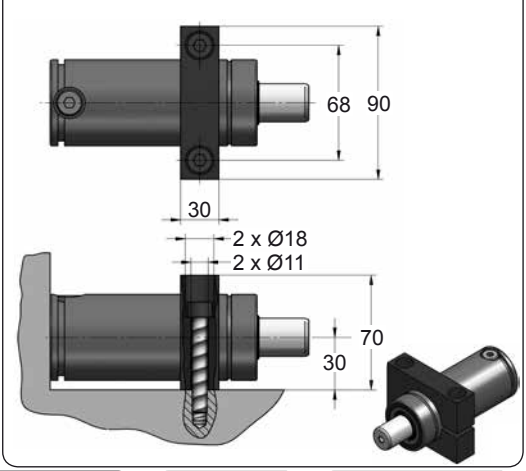









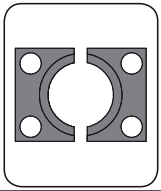

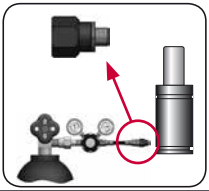

| CODE | | AG 750 050 | KIT XXXXXXX-S<br>KIT XXXXXXX-C | C05-050 | 18 GA 5 |
|---|---|---|---|---|---|
| ENG | ORDER | GAS SPRING | REPAIR KIT | FLANGE | CHARGING ADAPTER |
| DEU | BESTELLUNG | GASDRUCKFEDER | ERSATZTEILSATZ | FLANSCHE | LADEADAPTER |
| FRA | COMMANDE | RESSORT À GAZ | KIT DE RÉPARATION | BRIDE | RACCORD DE CHARGE |
| ITA | ORDINE | CILINDRO AD AZOTO | KIT DI MANUTENZIONE | FLANGE | ADATTATORE DI CARICO |
| ESP | PEDIDO | RESORTE DE GAS | KIT DE REPARACION | BRIDA | ADAPTADOR DE CARGA |
| POR | PEDIDO | CILINDRO DE GÁS | KIT DE MANUTENÇÃO | FLANGE | ADAPTADOR DE CARGA |

# AG 1500

ISO

| | | | | | |
|---|---|---|---|---|---|
| **BMW** | B2 4006 | **FORD** | W-DX35-6203 | **PSA** | E24.54.815.G |
| **MB** | B8 3180 220 000 001 | **GM** | 90.25 | **RENAULT** | EM24.54.700 |
| **VW** | 39D 878 | | | **NISSAN** | K32S0 |

AZOL GAS

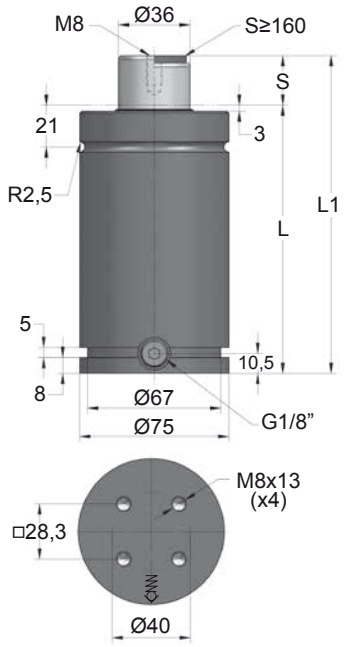


| ORDER | S (mm) | L1 ±0,25 (mm) | L (mm) | Kg. |
|---|---|---|---|---|
| AG 1500 012 | 12.7 | 135.4 | 122.7 | 2.98 |
| AG 1500 025 | 25 | 160 | 135 | 3.23 |
| AG 1500 038 | 38 | 186 | 148 | 3.50 |
| AG 1500 050 | 50 | 210 | 160 | 3.74 |
| AG 1500 063 | 63.5 | 237 | 173.5 | 4.02 |
| AG 1500 080 | 80 | 270 | 190 | 4.35 |
| AG 1500 100 | 100 | 310 | 210 | 4.76 |
| AG 1500 125 | 125 | 360 | 235 | 5.27 |
| AG 1500 160 * | 160 | 430 | 270 | 5.99 |
| AG 1500 200 * | 200 | 510 | 310 | 6.80 |
| AG 1500 250 * | 250 | 610 | 360 | 7.82 |
| AG 1500 300 * | 300 | 710 | 410 | 8.85 |

PED · ISO 11901 · NAAMS · VDI 3003 · CNOMO EM.24.54

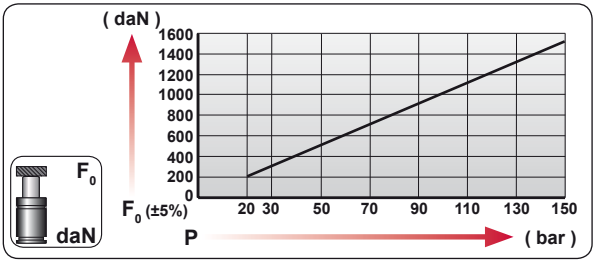


| CODE | bar | psi | $F_0$ daN | $F_1$ daN |
|---|---|---|---|---|
| AG 1500 050 | 150 | 2175 | 1530 | 2070 |
| AG-H 1500 050 | 0 | 0 | --- | --- |

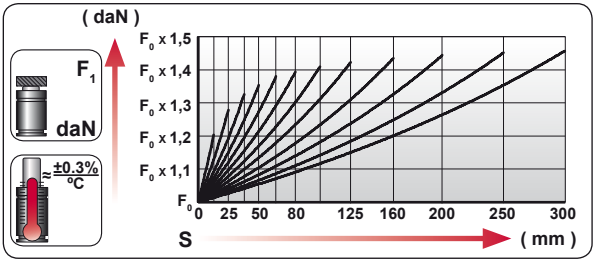


| | |
|---|---|
| ENG | ORDER |
| DEU | BESTELLUNG |
| FRA | COMMANDE |
| ITA | ORDINE |
| ESP | PEDIDO |
| POR | PEDIDO |

$F_0$ daN — S mm

AG 1500 50

AG 1500 050

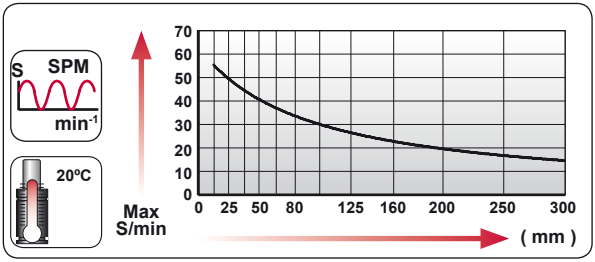


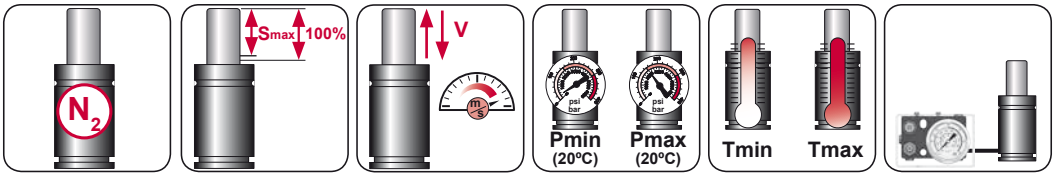


| $N_2$ | Smax < 90% | Vmax 2 m/s | bar psi 20 290 | bar psi 150 2175 | ºC ºF 0 32 | ºC ºF 80 176 | 600 CP- |
|---|---|---|---|---|---|---|---|

# AZOL GAS AGB-H 1500

ISO

| | | |
|---|---|---|
| | | |
| | | RENAULT EM24.54.700 |
| | | |

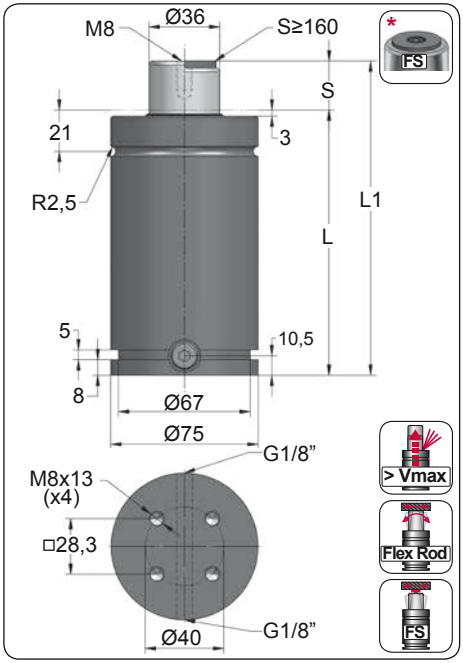


| ORDER | S (mm) | L1 ±0,25 (mm) | L (mm) | Kg. |
|---|---|---|---|---|
| AGB-H 1500 012 | 12.7 | 135.4 | 122.7 | 2.98 |
| AGB-H 1500 025 | 25 | 160 | 135 | 3.23 |
| AGB-H 1500 038 | 38 | 186 | 148 | 3.50 |
| AGB-H 1500 050 | 50 | 210 | 160 | 3.74 |
| AGB-H 1500 063 | 63.5 | 237 | 173.5 | 4.02 |
| AGB-H 1500 080 | 80 | 270 | 190 | 4.35 |
| AGB-H 1500 100 | 100 | 310 | 210 | 4.76 |
| AGB-H 1500 125 | 125 | 360 | 235 | 5.27 |
| AGB-H 1500 160 * | 160 | 430 | 270 | 5.99 |
| AGB-H 1500 200 * | 200 | 510 | 310 | 6.80 |
| AGB-H 1500 250 * | 250 | 610 | 360 | 7.82 |
| AGB-H 1500 300 * | 300 | 710 | 410 | 8.85 |

| CODE | | bar | psi | $F_0$ daN | $F_1$ daN |
|---|---|---|---|---|---|
| --------- | | --- | --- | --- | --- |
| AGB-H 1500 050 | | 0 | 0 | --- | --- |

## AG



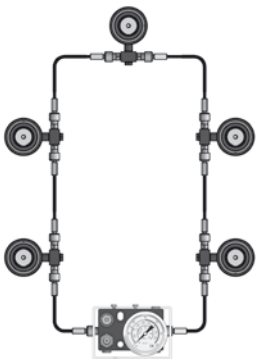

## AGB-H



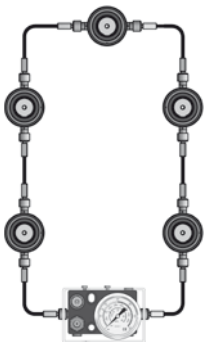








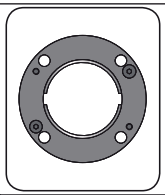

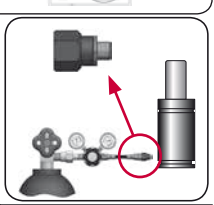

| CODE | AG 1500 050<br>AGB-H 1500 050 | KIT XXXXXXX-S<br>KIT XXXXXXX-C | A14-075 | 18 GA 5<br>SKK 12R 1/8 |
|---|---|---|---|---|
| ENG ORDER | GAS SPRING | REPAIR KIT | FLANGE | CHARGING ADAPTER |
| DEU BESTELLUNG | GASDRUCKFEDER | ERSATZTEILSATZ | FLANSCHE | LADEADAPTER |
| FRA COMMANDE | RESSORT À GAZ | KIT DE RÉPARATION | BRIDE | RACCORD DE CHARGE |
| ITA ORDINE | CILINDRO AD AZOTO | KIT DI MANUTENZIONE | FLANGE | ADATTATORE DI CARICO |
| ESP PEDIDO | RESORTE DE GAS | KIT DE REPARACION | BRIDA | ADAPTADOR DE CARGA |
| POR PEDIDO | CILINDRO DE GÁS | KIT DE MANUTENÇÃO | FLANGE | ADAPTADOR DE CARGA |

# AG 1500 MOUNTS

ISO

AZOL GAS

## A14-075

E24.54.815.G
EM24.54.700/F

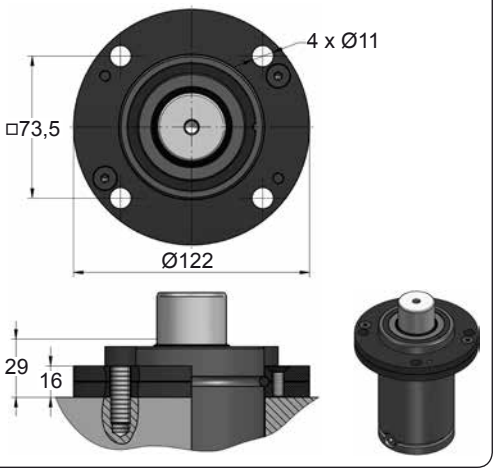


## A34-075

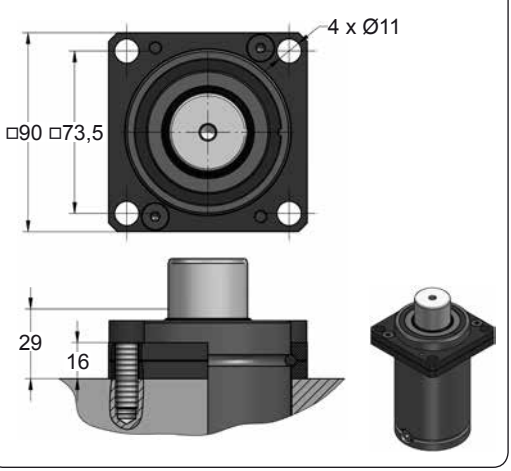


## B21-075

EM24.54.700/F

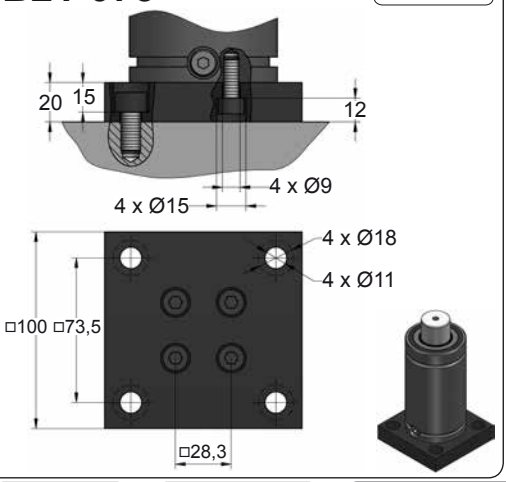


## B76-075

E24.54.815.G
EM24.54.700/F

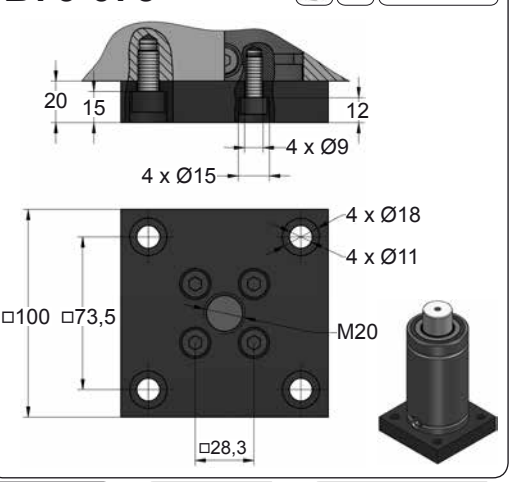









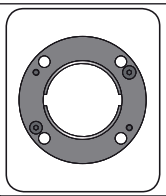

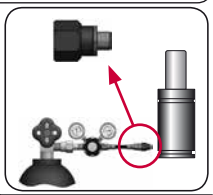

| CODE | | AG 1500 050 | KIT XXXXXXX-S<br>KIT XXXXXXX-C | A14-075 | 18 GA 5 |
|---|---|---|---|---|---|
| ENG | ORDER | GAS SPRING | REPAIR KIT | FLANGE | CHARGING ADAPTER |
| DEU | BESTELLUNG | GASDRUCKFEDER | ERSATZTEILSATZ | FLANSCHE | LADEADAPTER |
| FRA | COMMANDE | RESSORT À GAZ | KIT DE RÉPARATION | BRIDE | RACCORD DE CHARGE |
| ITA | ORDINE | CILINDRO AD AZOTO | KIT DI MANUTENZIONE | FLANGE | ADATTATORE DI CARICO |
| ESP | PEDIDO | RESORTE DE GAS | KIT DE REPARACION | BRIDA | ADAPTADOR DE CARGA |
| POR | PEDIDO | CILINDRO DE GÁS | KIT DE MANUTENÇÃO | FLANGE | ADAPTADOR DE CARGA |

AZOL GAS

# AG 1500 MOUNTS

ISO

## C05-075

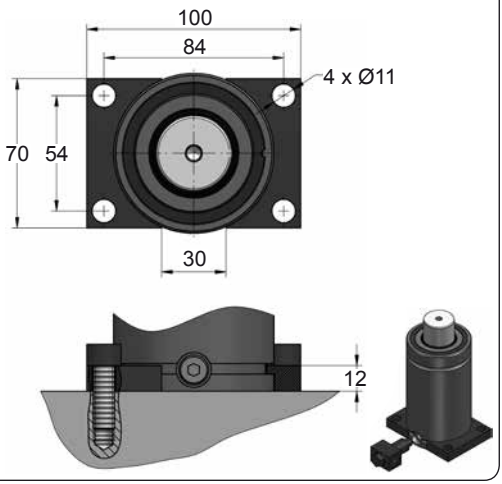


## C20-075

E24.54.815.G
EM24.54.700/F

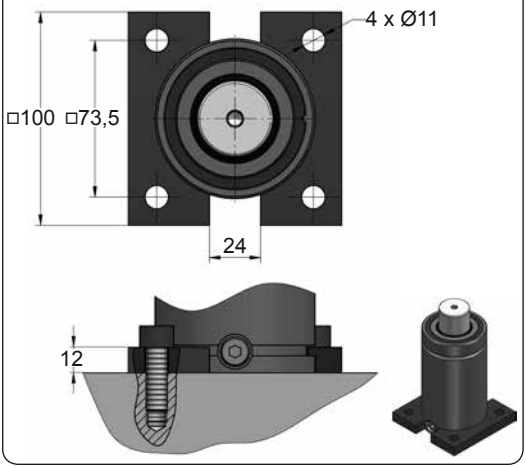


## D02-075

E24.54.815.G
EM24.54.700/F

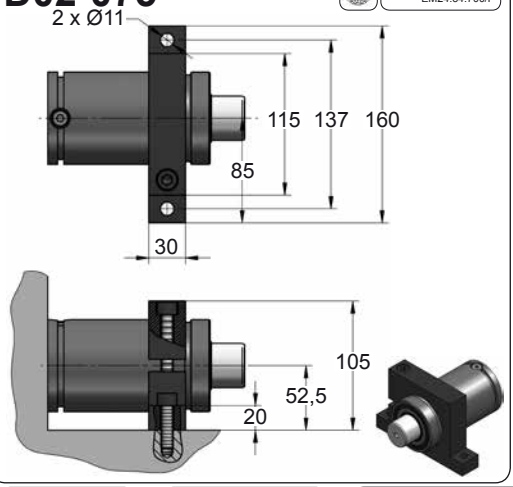


## D67-075

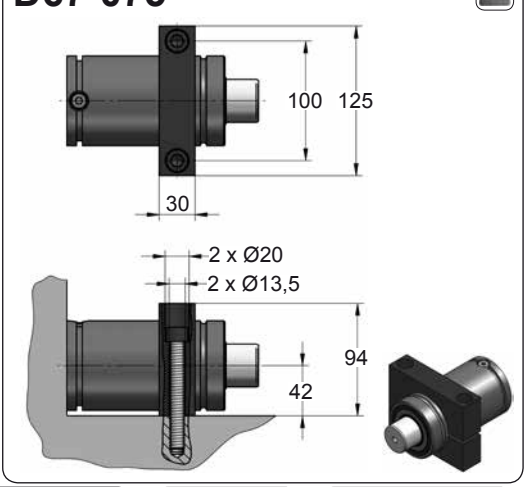









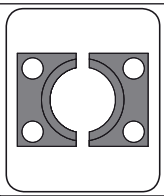

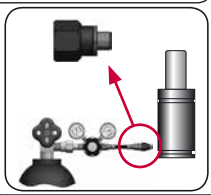

| CODE | | AG 1500 050 | KIT XXXXXXX-S<br>KIT XXXXXXX-C | C05-075 | 18 GA 5 |
|---|---|---|---|---|---|
| ENG | ORDER | GAS SPRING | REPAIR KIT | FLANGE | CHARGING ADAPTER |
| DEU | BESTELLUNG | GASDRUCKFEDER | ERSATZTEILSATZ | FLANSCHE | LADEADAPTER |
| FRA | COMMANDE | RESSORT À GAZ | KIT DE RÉPARATION | BRIDE | RACCORD DE CHARGE |
| ITA | ORDINE | CILINDRO AD AZOTO | KIT DI MANUTENZIONE | FLANGE | ADATTATORE DI CARICO |
| ESP | PEDIDO | RESORTE DE GAS | KIT DE REPARACION | BRIDA | ADAPTADOR DE CARGA |
| POR | PEDIDO | CILINDRO DE GÁS | KIT DE MANUTENÇÃO | FLANGE | ADAPTADOR DE CARGA |

# AG 3000

ISO

| | | | | | |
|---|---|---|---|---|---|
| BMW | B2 4006 | FORD | W-DX35-6203 | PSA | E24.54.815.G |
| MB | B8 3180 220 000 001 | GM | 90.25 | RENAULT | EM24.54.700 |
| VW | 39D 878 | | | NISSAN | K32S0 |

AZOL GAS

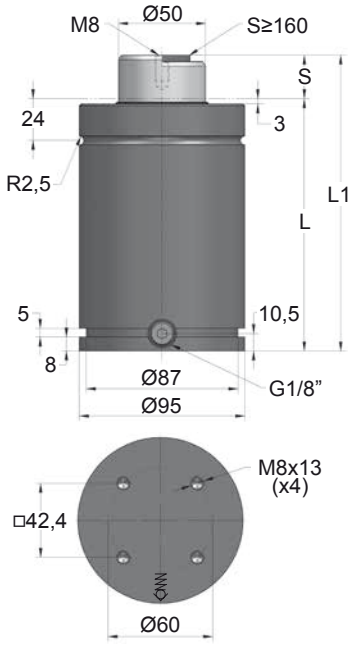


| ORDER | S (mm) | L1 ±0,25 (mm) | L (mm) | Kg. |
|---|---|---|---|---|
| AG 3000 012 | 12.7 | 145.4 | 132.7 | 5.50 |
| AG 3000 025 | 25 | 170 | 145 | 5.80 |
| AG 3000 038 | 38 | 196 | 158 | 6.26 |
| AG 3000 050 | 50 | 220 | 170 | 6.80 |
| AG 3000 063 | 63.5 | 247 | 183.5 | 7.20 |
| AG 3000 080 | 80 | 280 | 200 | 8.21 |
| AG 3000 100 | 100 | 320 | 220 | 8.40 |
| AG 3000 125 | 125 | 370 | 245 | 8.98 |
| AG 3000 160 * | 160 | 440 | 280 | 10.08 |
| AG 3000 200 * | 200 | 520 | 320 | 11.40 |
| AG 3000 250 * | 250 | 620 | 370 | 13.20 |
| AG 3000 300 * | 300 | 720 | 420 | 14.25 |

PED · ISO 11901 · NAAMS · VDI 3003 · CNOMO EM.24.54

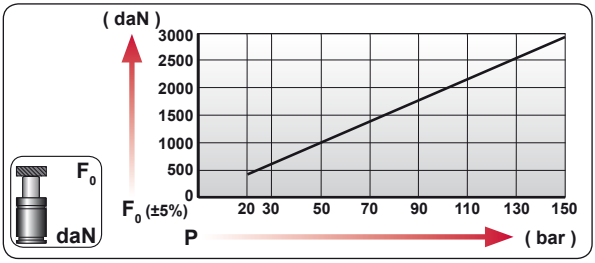


| CODE | bar | psi | F0 daN | F1 daN |
|---|---|---|---|---|
| AG 3000 050 | 150 | 2175 | 2945 | 4180 |
| AG-H 3000 050 | 0 | 0 | --- | --- |

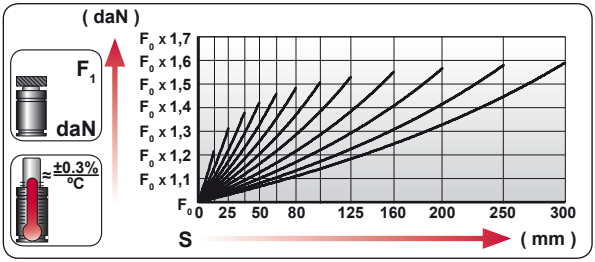


| | |
|---|---|
| ENG | ORDER |
| DEU | BESTELLUNG |
| FRA | COMMANDE |
| ITA | ORDINE |
| ESP | PEDIDO |
| POR | PEDIDO |




AG 3000 50

AG 3000 050

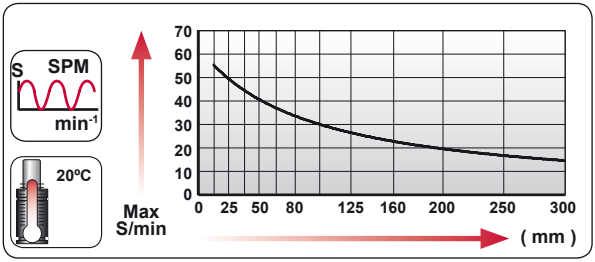


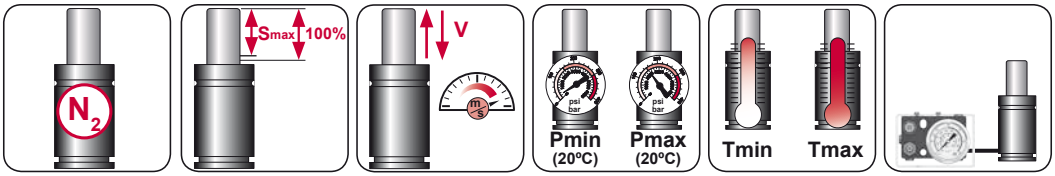


| $N_2$ | Smax < 90% | Vmax 2 m/s | bar psi 20 290 | bar psi 150 2175 | °C °F 0 32 | °C °F 80 176 | 600 CP- |
|---|---|---|---|---|---|---|---|

# AZOL GAS AGB-H 3000

ISO

| | | |
|---|---|---|
| | | RENAULT EM24.54.700 |

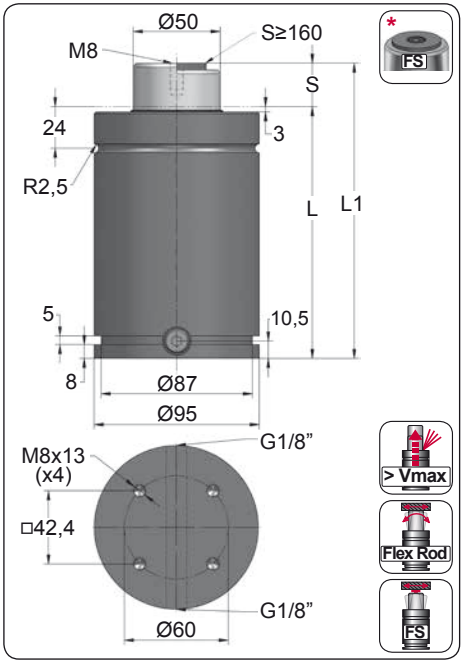


| ORDER | S (mm) | L1 ±0,25 (mm) | L (mm) | Kg. |
|---|---|---|---|---|
| AGB-H 3000 012 | 12.7 | 145.4 | 132.7 | 5.50 |
| AGB-H 3000 025 | 25 | 170 | 145 | 5.80 |
| AGB-H 3000 038 | 38 | 196 | 158 | 6.26 |
| AGB-H 3000 050 | 50 | 220 | 170 | 6.80 |
| AGB-H 3000 063 | 63.5 | 247 | 183.5 | 7.20 |
| AGB-H 3000 080 | 80 | 280 | 200 | 8.21 |
| AGB-H 3000 100 | 100 | 320 | 220 | 8.40 |
| AGB-H 3000 125 | 125 | 370 | 245 | 8.98 |
| AGB-H 3000 160 * | 160 | 440 | 280 | 10.08 |
| AGB-H 3000 200 * | 200 | 520 | 320 | 11.40 |
| AGB-H 3000 250 * | 250 | 620 | 370 | 13.20 |
| AGB-H 3000 300 * | 300 | 720 | 420 | 14.25 |

| CODE | | bar | psi | $F_0$ daN | $F_1$ daN |
|---|---|---|---|---|---|
| --------- | | --- | --- | --- | --- |
| AGB-H 3000 050 | | 0 | 0 | --- | --- |

## AG



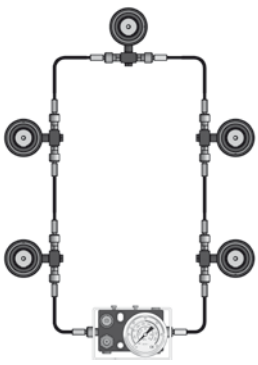

## AGB-H



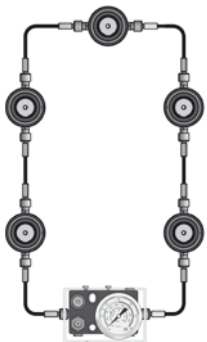



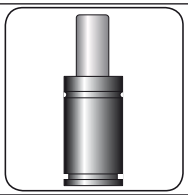




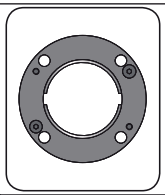

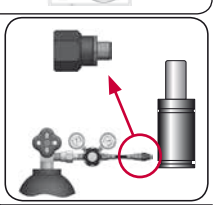

| CODE | AG 3000 050<br>AGB-H 3000 050 | KIT XXXXXXX-S<br>KIT XXXXXXX-C | A14-095 | 18 GA 5<br>SKK 12R 1/8 |
|---|---|---|---|---|
| ENG ORDER | GAS SPRING | REPAIR KIT | FLANGE | CHARGING ADAPTER |
| DEU BESTELLUNG | GASDRUCKFEDER | ERSATZTEILSATZ | FLANSCHE | LADEADAPTER |
| FRA COMMANDE | RESSORT À GAZ | KIT DE RÉPARATION | BRIDE | RACCORD DE CHARGE |
| ITA ORDINE | CILINDRO AD AZOTO | KIT DI MANUTENZIONE | FLANGE | ADATTATORE DI CARICO |
| ESP PEDIDO | RESORTE DE GAS | KIT DE REPARACION | BRIDA | ADAPTADOR DE CARGA |
| POR PEDIDO | CILINDRO DE GÁS | KIT DE MANUTENÇÃO | FLANGE | ADAPTADOR DE CARGA |

# AG 3000 MOUNTS

ISO

AZOL GAS

## A14-095

E24.54.815.G
EM24.54.700/F

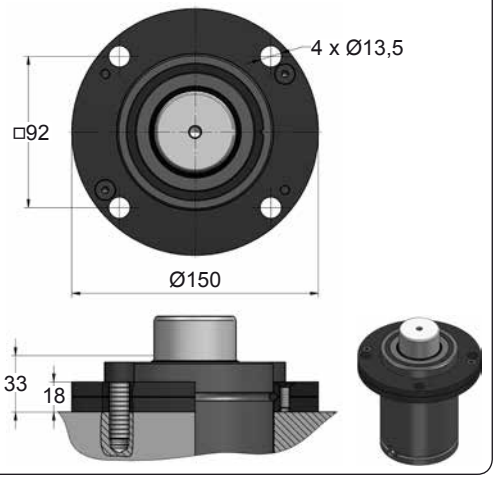


## A34-095

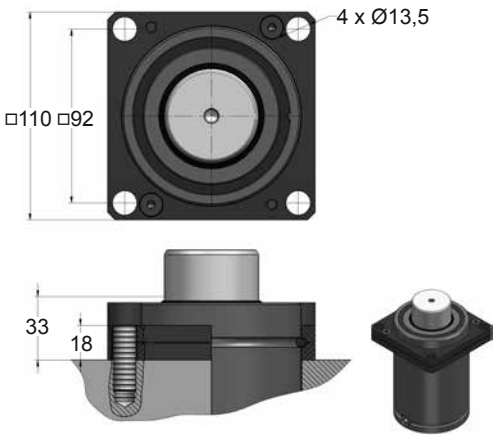


## B21-095

EM24.54.700/F

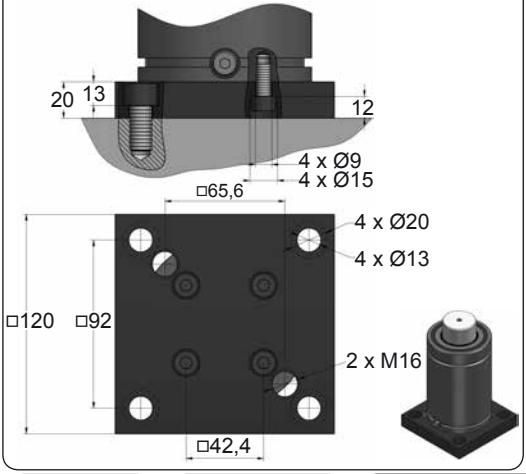


## B76-095

EM24.54.700/F

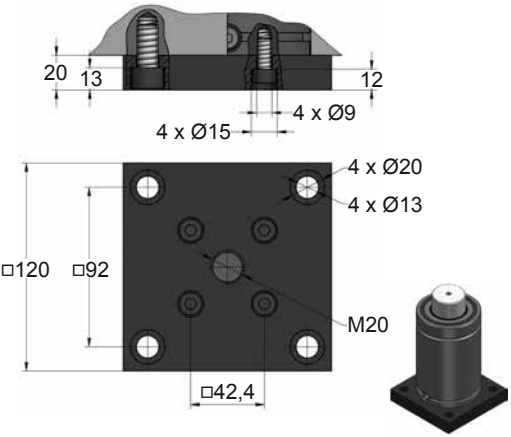









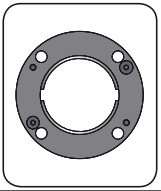

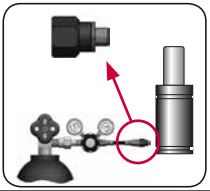

| CODE | | AG 3000 050 | KIT XXXXXXX-S<br>KIT XXXXXXX-C | A14-095 | 18 GA 5 |
|---|---|---|---|---|---|
| ENG | ORDER | GAS SPRING | REPAIR KIT | FLANGE | CHARGING ADAPTER |
| DEU | BESTELLUNG | GASDRUCKFEDER | ERSATZTEILSATZ | FLANSCHE | LADEADAPTER |
| FRA | COMMANDE | RESSORT À GAZ | KIT DE RÉPARATION | BRIDE | RACCORD DE CHARGE |
| ITA | ORDINE | CILINDRO AD AZOTO | KIT DI MANUTENZIONE | FLANGE | ADATTATORE DI CARICO |
| ESP | PEDIDO | RESORTE DE GAS | KIT DE REPARACION | BRIDA | ADAPTADOR DE CARGA |
| POR | PEDIDO | CILINDRO DE GÁS | KIT DE MANUTENÇÃO | FLANGE | ADAPTADOR DE CARGA |

AZOL GAS

# AG 3000 MOUNTS

ISO

## C05-095

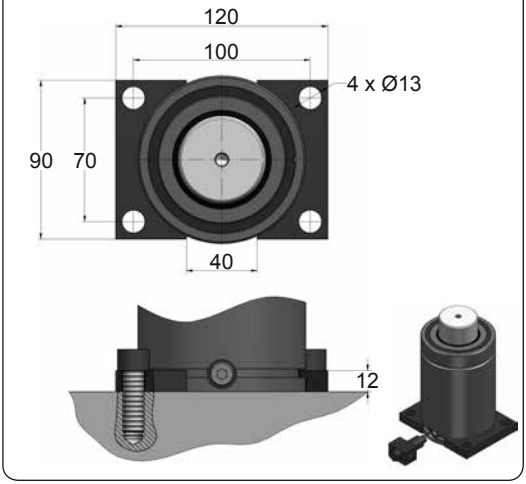


## C20-095

ISO VDI E24.54.815.G EM24.54.700/F

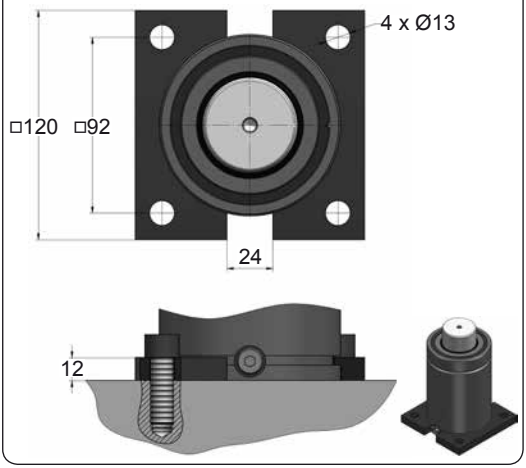


## D02-095

ISO E24.54.815.G EM24.54.700/F

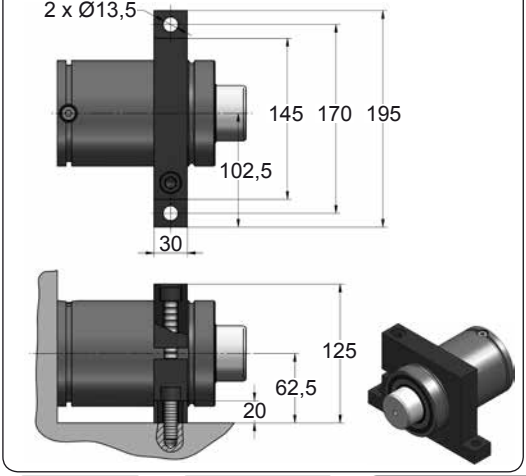


## D67-095

VDI

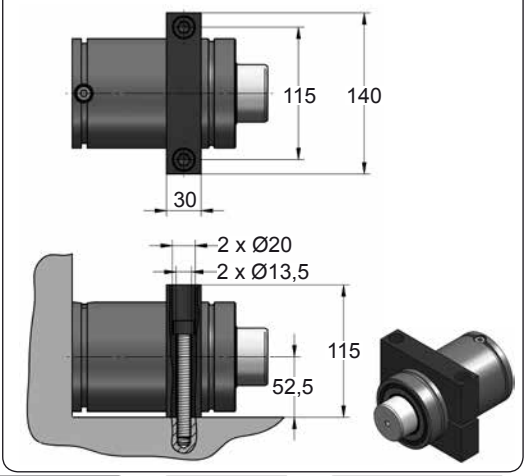





| CODE | | AG 3000 050 | KIT XXXXXXX-S<br>KIT XXXXXXX-C | C05-095 | 18 GA 5 |
|---|---|---|---|---|---|
| ENG | ORDER | GAS SPRING | REPAIR KIT | FLANGE | CHARGING ADAPTER |
| DEU | BESTELLUNG | GASDRUCKFEDER | ERSATZTEILSATZ | FLANSCHE | LADEADAPTER |
| FRA | COMMANDE | RESSORT À GAZ | KIT DE RÉPARATION | BRIDE | RACCORD DE CHARGE |
| ITA | ORDINE | CILINDRO AD AZOTO | KIT DI MANUTENZIONE | FLANGE | ADATTATORE DI CARICO |
| ESP | PEDIDO | RESORTE DE GAS | KIT DE REPARACION | BRIDA | ADAPTADOR DE CARGA |
| POR | PEDIDO | CILINDRO DE GÁS | KIT DE MANUTENÇÃO | FLANGE | ADAPTADOR DE CARGA |

# AG 5000

ISO

| | | | | | |
|---|---|---|---|---|---|
| BMW | B2 4006 | FORD | W-DX35-6203 | PSA | E24.54.815.G |
| MB | B8 3180 220 000 001 | GM | 90.25 | RENAULT | EM24.54.700 |
| VW | 39D 878 | | | NISSAN | K32S0 |

AZOL GAS

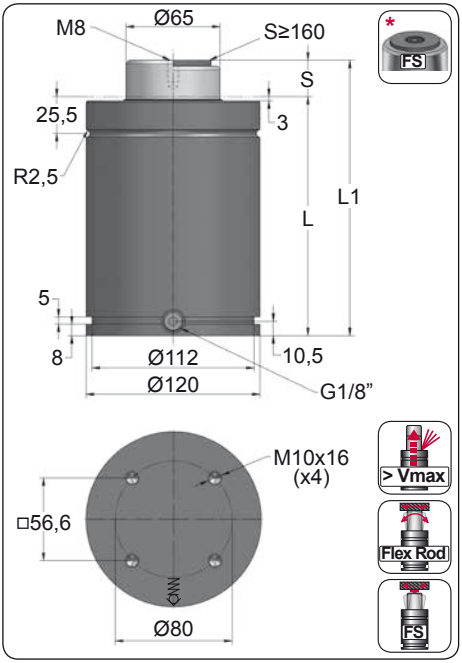


| ORDER | S (mm) | L1 ±0,25 (mm) | L (mm) | Kg. |
|---|---|---|---|---|
| AG 5000 012 | 12.7 | 165.4 | 152.7 | 10.63 |
| AG 5000 025 | 25 | 190 | 165 | 11.80 |
| AG 5000 038 | 38 | 216 | 178 | 11.95 |
| AG 5000 050 | 50 | 240 | 190 | 12.29 |
| AG 5000 063 | 63.5 | 267 | 203.5 | 13.01 |
| AG 5000 080 | 80 | 300 | 220 | 14.60 |
| AG 5000 100 | 100 | 340 | 240 | 15.05 |
| AG 5000 125 | 125 | 390 | 265 | 16.40 |
| AG 5000 160 * | 160 | 460 | 300 | 18.20 |
| AG 5000 200 * | 200 | 540 | 340 | 20.00 |
| AG 5000 250 * | 250 | 640 | 390 | 23.40 |
| AG 5000 300 * | 300 | 740 | 440 | 25.00 |

PED · ISO 11901 · NAAMS · VDI 3003 · CNOMO EM.24.54

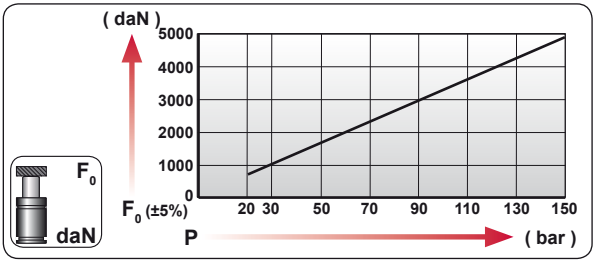


| CODE | bar | psi | $F_0$ daN | $F_1$ daN |
|---|---|---|---|---|
| AG 5000 050 | 150 | 2175 | 4980 | 7170 |
| AG-H 5000 050 | 0 | 0 | --- | --- |

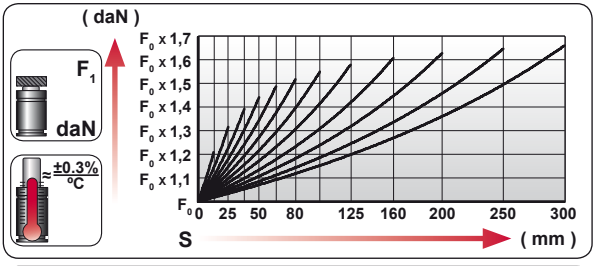


| | |
|---|---|
| ENG | ORDER |
| DEU | BESTELLUNG |
| FRA | COMMANDE |
| ITA | ORDINE |
| ESP | PEDIDO |
| POR | PEDIDO |

$F_0$ daN — S mm

AG 5000 50

AG 5000 050

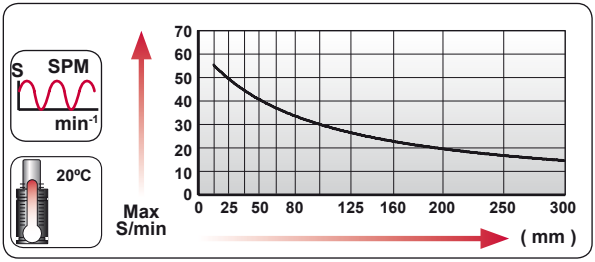


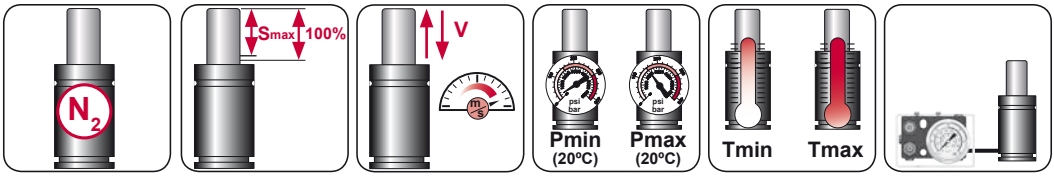


| $N_2$ | Smax < 90% | Vmax 2 m/s | bar psi 20 290 | bar psi 150 2175 | °C °F 0 32 | °C °F 80 176 | 600 CP- |
|---|---|---|---|---|---|---|---|

# AZOL GAS AGB-H 5000

ISO

| | | |
|---|---|---|
| | | RENAULT EM24.54.700 |

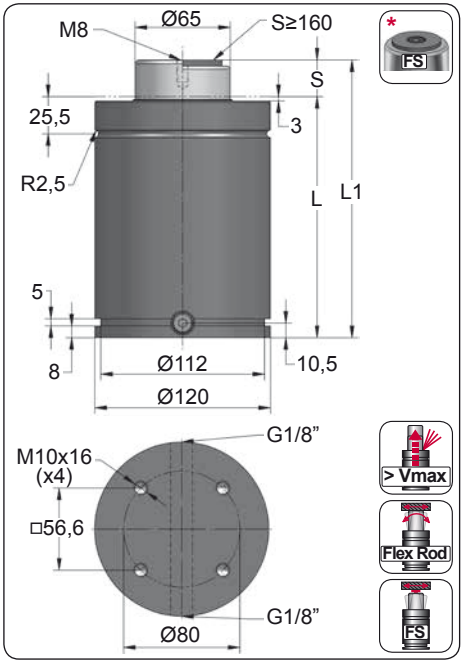


| ORDER | S (mm) | L1 ±0,25 (mm) | L (mm) | Kg. |
|---|---|---|---|---|
| AGB-H 5000 012 | 12.7 | 165.4 | 152.7 | 10.63 |
| AGB-H 5000 025 | 25 | 190 | 165 | 11.80 |
| AGB-H 5000 038 | 38 | 216 | 178 | 11.95 |
| AGB-H 5000 050 | 50 | 240 | 190 | 12.29 |
| AGB-H 5000 063 | 63.5 | 267 | 203.5 | 13.01 |
| AGB-H 5000 080 | 80 | 300 | 220 | 14.60 |
| AGB-H 5000 100 | 100 | 340 | 240 | 15.05 |
| AGB-H 5000 125 | 125 | 390 | 265 | 16.40 |
| AGB-H 5000 160 * | 160 | 460 | 300 | 18.20 |
| AGB-H 5000 200 * | 200 | 540 | 340 | 20.00 |
| AGB-H 5000 250 * | 250 | 640 | 390 | 23.40 |
| AGB-H 5000 300 * | 300 | 740 | 440 | 25.00 |

| CODE | bar | psi | $F_0$ daN | $F_1$ daN |
|---|---|---|---|---|
| --------- | --- | --- | --- | --- |
| AGB-H 5000 050 | 0 | 0 | --- | --- |

## AG



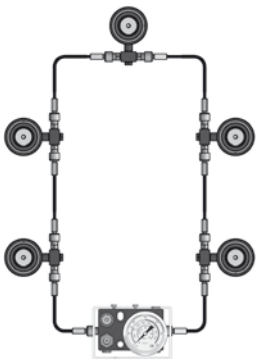

## AGB-H



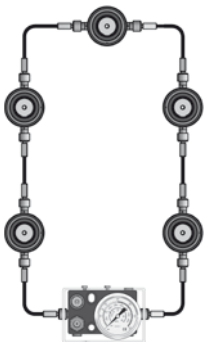



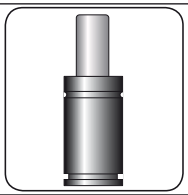




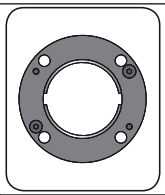

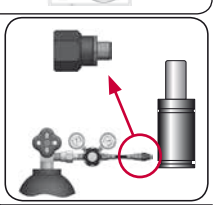

| CODE | AG 5000 050<br>AGB-H 5000 050 | KIT XXXXXXX-S<br>KIT XXXXXXX-C | A14-120 | 18 GA 5<br>SKK 12R 1/8 |
|---|---|---|---|---|
| ENG ORDER | GAS SPRING | REPAIR KIT | FLANGE | CHARGING ADAPTER |
| DEU BESTELLUNG | GASDRUCKFEDER | ERSATZTEILSATZ | FLANSCHE | LADEADAPTER |
| FRA COMMANDE | RESSORT À GAZ | KIT DE RÉPARATION | BRIDE | RACCORD DE CHARGE |
| ITA ORDINE | CILINDRO AD AZOTO | KIT DI MANUTENZIONE | FLANGE | ADATTATORE DI CARICO |
| ESP PEDIDO | RESORTE DE GAS | KIT DE REPARACION | BRIDA | ADAPTADOR DE CARGA |
| POR PEDIDO | CILINDRO DE GÁS | KIT DE MANUTENÇÃO | FLANGE | ADAPTADOR DE CARGA |

# AG 5000 MOUNTS

ISO

AZOL GAS

## A14-120

E24.54.815.G
EM24.54.700/F

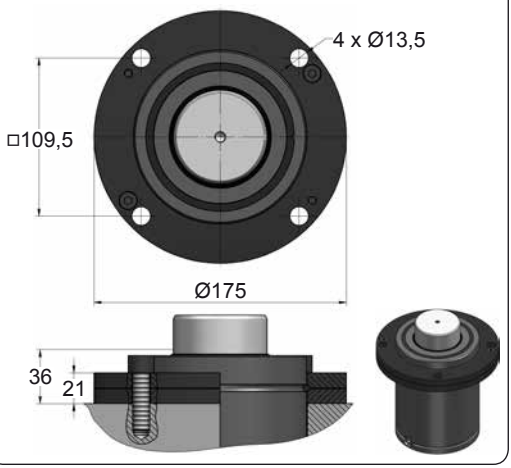


## A34-120

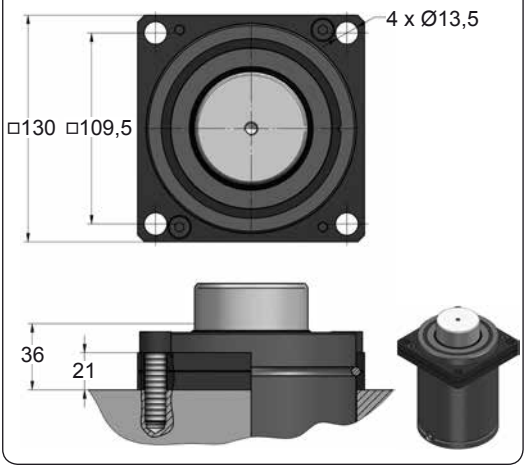


## B21-120

EM24.54.700/F

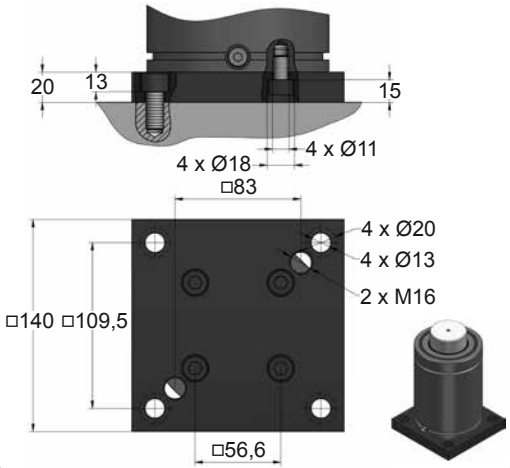


## B76-120

EM24.54.700/F

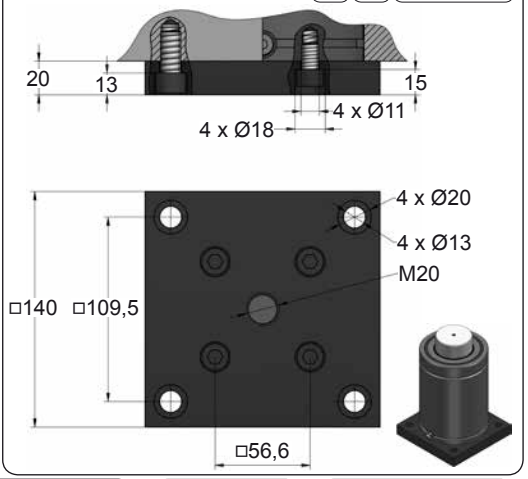









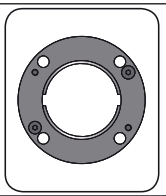

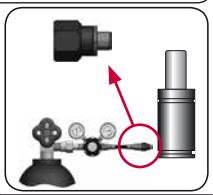

| CODE | | AG 5000 050 | KIT XXXXXXX-S<br>KIT XXXXXXX-C | A14-120 | 18 GA 5 |
|---|---|---|---|---|---|
| ENG | ORDER | GAS SPRING | REPAIR KIT | FLANGE | CHARGING ADAPTER |
| DEU | BESTELLUNG | GASDRUCKFEDER | ERSATZTEILSATZ | FLANSCHE | LADEADAPTER |
| FRA | COMMANDE | RESSORT À GAZ | KIT DE RÉPARATION | BRIDE | RACCORD DE CHARGE |
| ITA | ORDINE | CILINDRO AD AZOTO | KIT DI MANUTENZIONE | FLANGE | ADATTATORE DI CARICO |
| ESP | PEDIDO | RESORTE DE GAS | KIT DE REPARACION | BRIDA | ADAPTADOR DE CARGA |
| POR | PEDIDO | CILINDRO DE GÁS | KIT DE MANUTENÇÃO | FLANGE | ADAPTADOR DE CARGA |

AZOL GAS

# AG 5000 MOUNTS

ISO

## C05-120

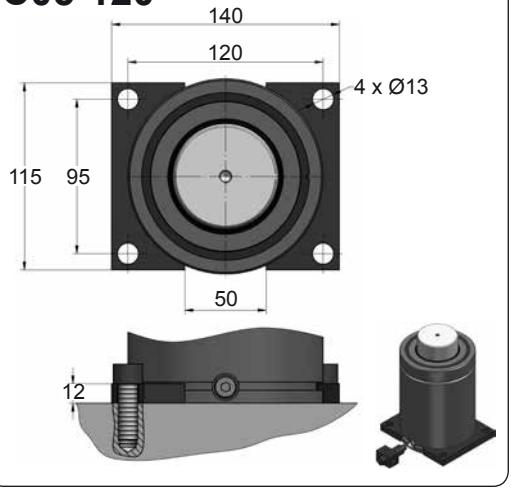


## C20-120

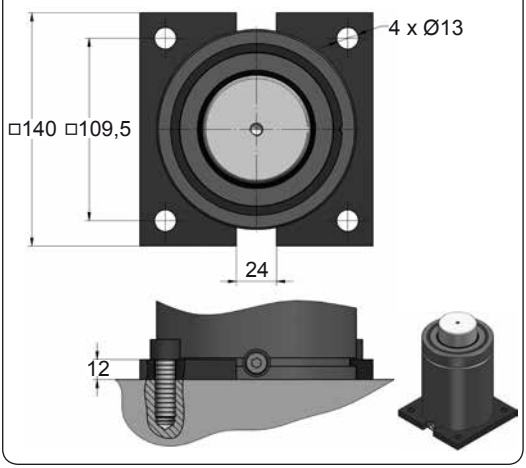


## D02-120

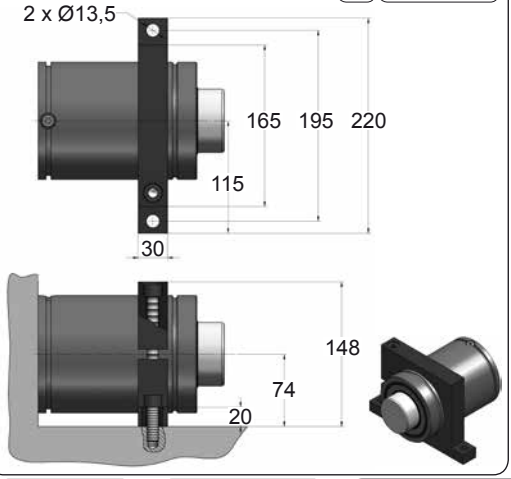


## D67-120

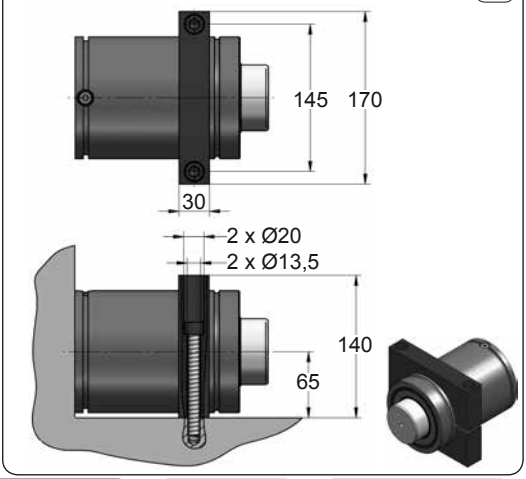









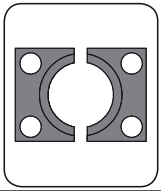

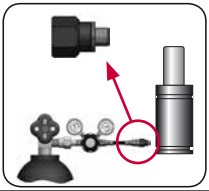

| CODE | | AG 5000 050 | KIT XXXXXXX-S<br>KIT XXXXXXX-C | C05-120 | 18 GA 5 |
|---|---|---|---|---|---|
| ENG | ORDER | GAS SPRING | REPAIR KIT | FLANGE | CHARGING ADAPTER |
| DEU | BESTELLUNG | GASDRUCKFEDER | ERSATZTEILSATZ | FLANSCHE | LADEADAPTER |
| FRA | COMMANDE | RESSORT À GAZ | KIT DE RÉPARATION | BRIDE | RACCORD DE CHARGE |
| ITA | ORDINE | CILINDRO AD AZOTO | KIT DI MANUTENZIONE | FLANGE | ADATTATORE DI CARICO |
| ESP | PEDIDO | RESORTE DE GAS | KIT DE REPARACION | BRIDA | ADAPTADOR DE CARGA |
| POR | PEDIDO | CILINDRO DE GÁS | KIT DE MANUTENÇÃO | FLANGE | ADAPTADOR DE CARGA |

# AG 7500

ISO

| | | | | | |
|---|---|---|---|---|---|
| BMW | B2 4006 | FORD | W-DX35-6203 | PSA | E24.54.815.G |
| MB | B8 3180 220 000 001 | GM | 90.25 | RENAULT | EM24.54.700 |
| VW | 39D 878 | | | | |

AZOL GAS

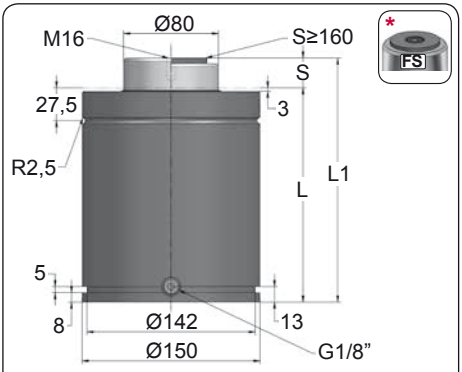


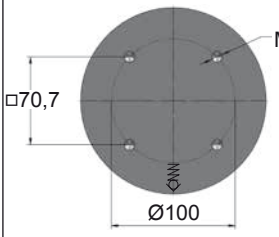


FS

> Vmax

Flex Rod

FS

| ORDER | S (mm) | L1 ±0,25 (mm) | L (mm) | Kg. |
|---|---|---|---|---|
| AG 7500 012 | 12.7 | 180.4 | 167.7 | 18.70 |
| AG 7500 025 | 25 | 205 | 180 | 19.39 |
| AG 7500 038 | 38 | 231 | 193 | 20.40 |
| AG 7500 050 | 50 | 255 | 205 | 21.50 |
| AG 7500 063 | 63.5 | 282 | 218.5 | 22.20 |
| AG 7500 080 | 80 | 315 | 235 | 23.50 |
| AG 7500 100 | 100 | 355 | 255 | 26.00 |
| AG 7500 125 | 125 | 405 | 280 | 27.00 |
| AG 7500 160 * | 160 | 475 | 315 | 32.20 |
| AG 7500 200 * | 200 | 555 | 355 | 34.20 |
| AG 7500 250 * | 250 | 655 | 405 | 38.20 |
| AG 7500 300 * | 300 | 755 | 455 | 43.00 |

PED 97/23/CE

ISO 11901

NAAMS

VDI 3003

ONORM EM.24.54

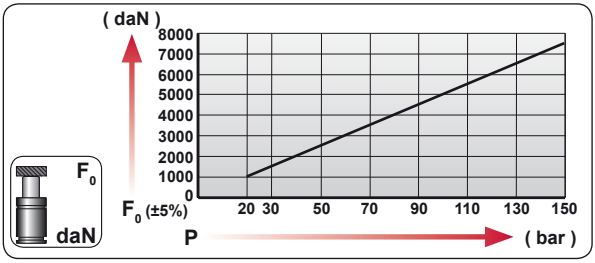


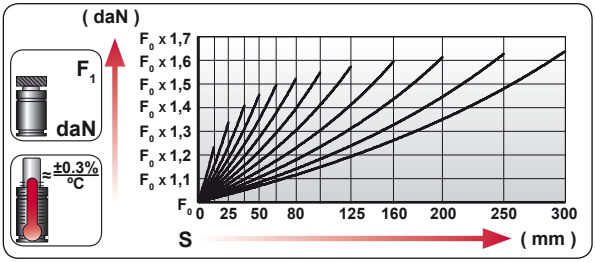


| CODE | bar | psi | F0 daN | F1 daN |
|---|---|---|---|---|
| AG 7500 050 | 150 | 2175 | 7540 | 10960 |
| AG-H 7500 050 | 0 | 0 | --- | --- |

| ENG | ORDER |
|---|---|
| DEU | BESTELLUNG |
| FRA | COMMANDE |
| ITA | ORDINE |
| ESP | PEDIDO |
| POR | PEDIDO |

F0 daN

S mm

AG 7500 50

AG 7500 050

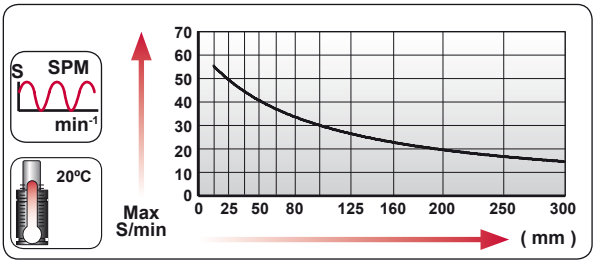


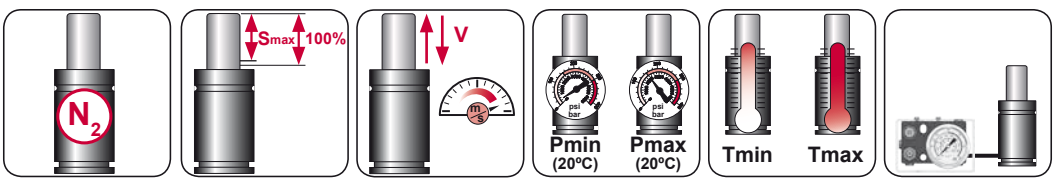


| $N_2$ | Smax < 90% | Vmax 2 m/s | bar psi 20 290 | bar psi 150 2175 | °C °F 0 32 | °C °F 80 176 | 600 CP- |
|---|---|---|---|---|---|---|---|

# AZOL GAS AGB-H 7500

ISO

| | | |
|---|---|---|
| | | RENAULT EM24.54.700 |

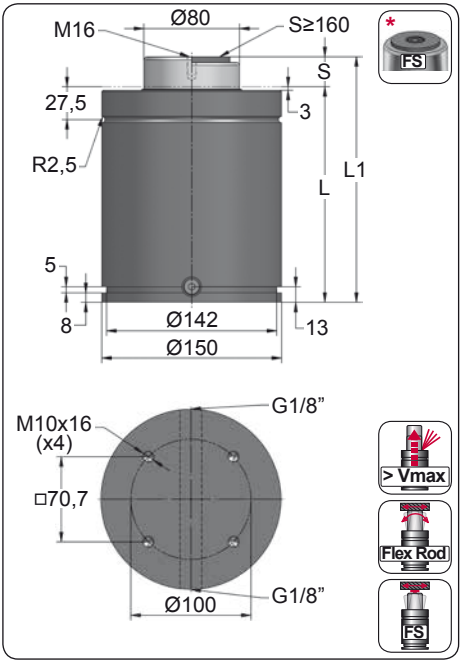


| ORDER | S (mm) | L1 ±0,25 (mm) | L (mm) | Kg. |
|---|---|---|---|---|
| AGB-H 7500 012 | 12.7 | 180.4 | 167.7 | 18.70 |
| AGB-H 7500 025 | 25 | 205 | 180 | 19.39 |
| AGB-H 7500 038 | 38 | 231 | 193 | 20.40 |
| AGB-H 7500 050 | 50 | 255 | 205 | 21.50 |
| AGB-H 7500 063 | 63.5 | 282 | 218.5 | 22.20 |
| AGB-H 7500 080 | 80 | 315 | 235 | 23.50 |
| AGB-H 7500 100 | 100 | 355 | 255 | 26.00 |
| AGB-H 7500 125 | 125 | 405 | 280 | 27.00 |
| AGB-H 7500 160 * | 160 | 475 | 315 | 32.20 |
| AGB-H 7500 200 * | 200 | 555 | 355 | 34.20 |
| AGB-H 7500 250 * | 250 | 655 | 405 | 38.20 |
| AGB-H 7500 300 * | 300 | 755 | 455 | 43.00 |

| CODE | bar | psi | $F_0$ daN | $F_1$ daN |
|---|---|---|---|---|
| --------- | --- | --- | --- | --- |
| AGB-H 7500 050 | 0 | 0 | --- | --- |

## AG





## AGB-H



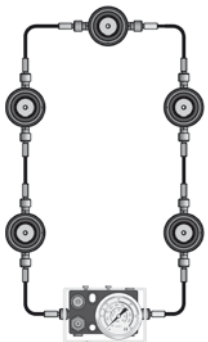








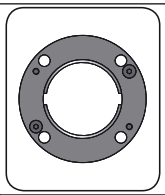

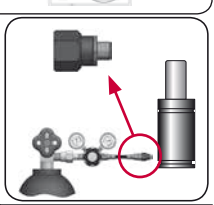

| CODE | AG 7500 050<br>AGB-H 7500 050 | KIT XXXXXXX-S<br>KIT XXXXXXX-C | A14-150 | 18 GA 5<br>SKK 12R 1/8 |
|---|---|---|---|---|
| ENG ORDER | GAS SPRING | REPAIR KIT | FLANGE | CHARGING ADAPTER |
| DEU BESTELLUNG | GASDRUCKFEDER | ERSATZTEILSATZ | FLANSCHE | LADEADAPTER |
| FRA COMMANDE | RESSORT À GAZ | KIT DE RÉPARATION | BRIDE | RACCORD DE CHARGE |
| ITA ORDINE | CILINDRO AD AZOTO | KIT DI MANUTENZIONE | FLANGE | ADATTATORE DI CARICO |
| ESP PEDIDO | RESORTE DE GAS | KIT DE REPARACION | BRIDA | ADAPTADOR DE CARGA |
| POR PEDIDO | CILINDRO DE GÁS | KIT DE MANUTENÇÃO | FLANGE | ADAPTADOR DE CARGA |

# AG 7500 MOUNTS

ISO

AZOL GAS

## A14-150

E24.54.815.G
EM24.54.700/F

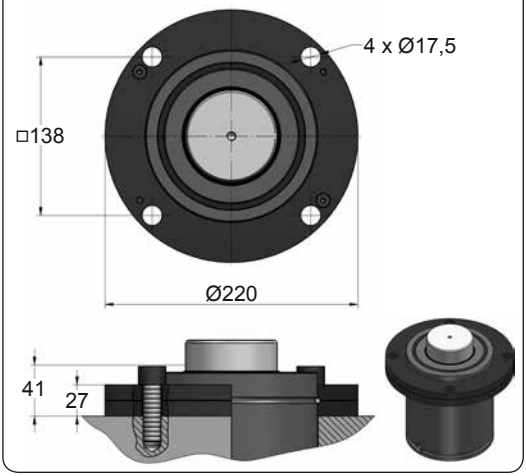


## A34-150

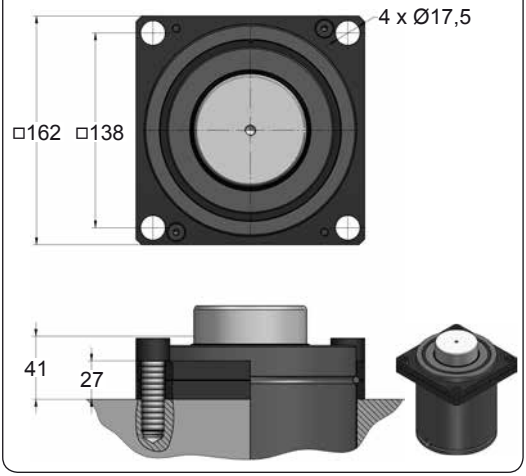


## B21-150

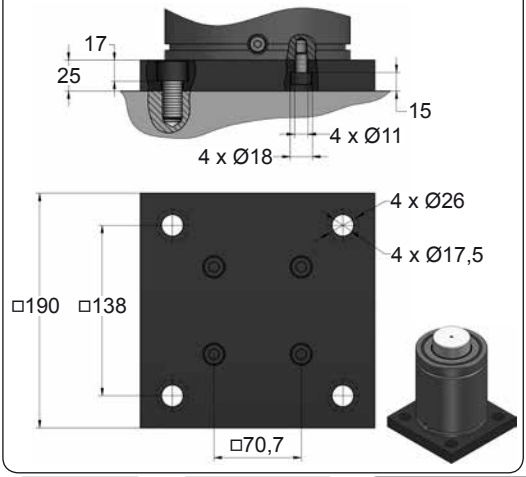


## B76-150

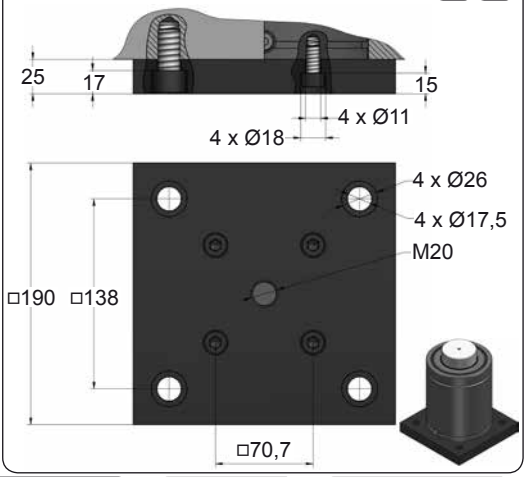









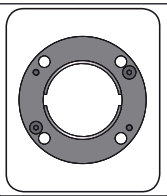

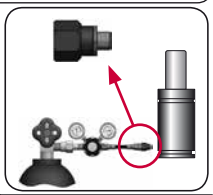

| CODE | | AG 7500 050 | KIT XXXXXXX-S<br>KIT XXXXXXX-C | A14-150 | 18 GA 5 |
|---|---|---|---|---|---|
| ENG | ORDER | GAS SPRING | REPAIR KIT | FLANGE | CHARGING ADAPTER |
| DEU | BESTELLUNG | GASDRUCKFEDER | ERSATZTEILSATZ | FLANSCHE | LADEADAPTER |
| FRA | COMMANDE | RESSORT À GAZ | KIT DE RÉPARATION | BRIDE | RACCORD DE CHARGE |
| ITA | ORDINE | CILINDRO AD AZOTO | KIT DI MANUTENZIONE | FLANGE | ADATTATORE DI CARICO |
| ESP | PEDIDO | RESORTE DE GAS | KIT DE REPARACION | BRIDA | ADAPTADOR DE CARGA |
| POR | PEDIDO | CILINDRO DE GÁS | KIT DE MANUTENÇÃO | FLANGE | ADAPTADOR DE CARGA |

AZOL GAS

# AG 7500 MOUNTS

ISO

## C05-150

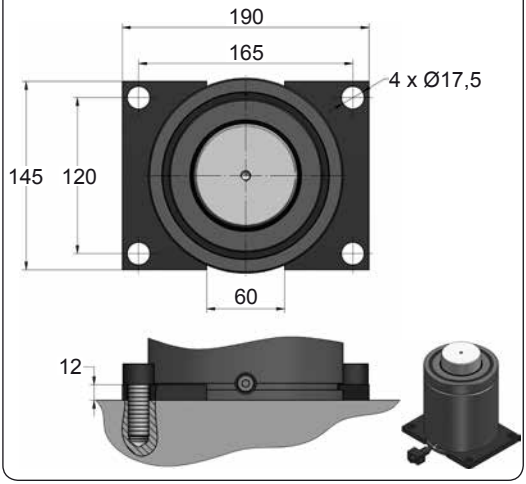


## C20-150

ISO VDI E24.54.815.G EM24.54.700/F

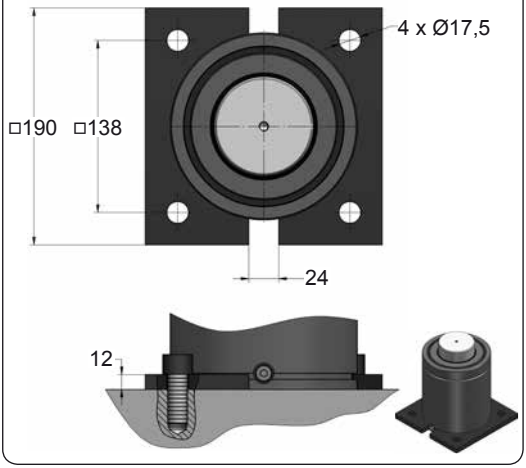


## D02-150

ISO E24.54.815.G

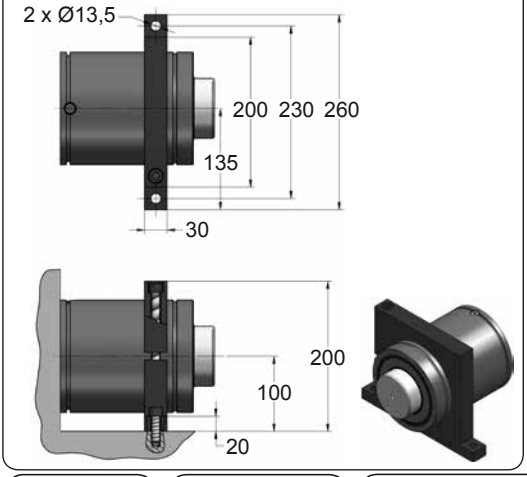


## D67-150

VDI

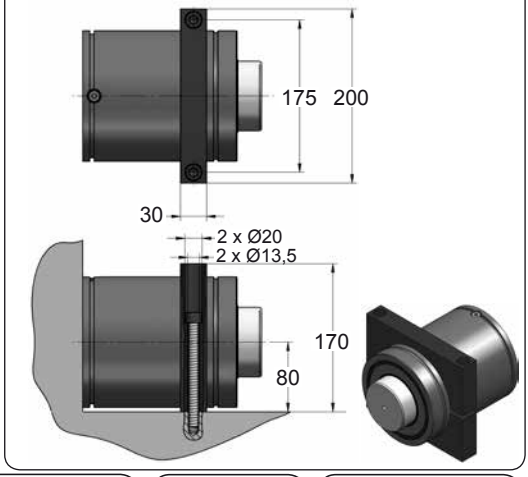









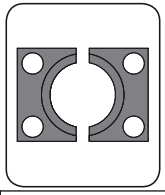

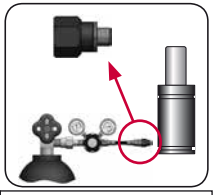

| CODE | | AG 7500 050 | KIT XXXXXXX-S<br>KIT XXXXXXX-C | C05-150 | 18 GA 5 |
|---|---|---|---|---|---|
| ENG | ORDER | GAS SPRING | REPAIR KIT | FLANGE | CHARGING ADAPTER |
| DEU | BESTELLUNG | GASDRUCKFEDER | ERSATZTEILSATZ | FLANSCHE | LADEADAPTER |
| FRA | COMMANDE | RESSORT À GAZ | KIT DE RÉPARATION | BRIDE | RACCORD DE CHARGE |
| ITA | ORDINE | CILINDRO AD AZOTO | KIT DI MANUTENZIONE | FLANGE | ADATTATORE DI CARICO |
| ESP | PEDIDO | RESORTE DE GAS | KIT DE REPARACION | BRIDA | ADAPTADOR DE CARGA |
| POR | PEDIDO | CILINDRO DE GÁS | KIT DE MANUTENÇÃO | FLANGE | ADAPTADOR DE CARGA |

# AG 10000

ISO

| | | |
|---|---|---|
| | GM 90.25 | RENAULT EM24.54.700 |

AZOL GAS

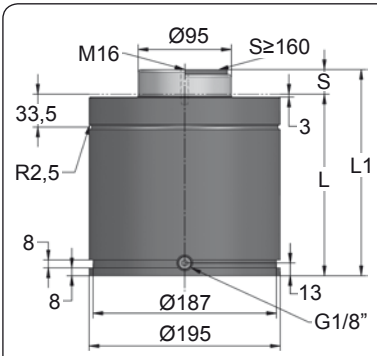


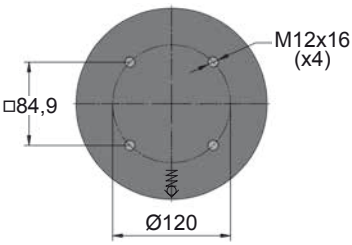








| ORDER | S (mm) | L1 ±0,25 (mm) | L (mm) | Kg. |
|---|---|---|---|---|
| AG 10000 012 | 12.7 | 185.4 | 172.7 | 32.77 |
| AG 10000 025 | 25 | 210 | 185 | 34.40 |
| AG 10000 038 | 38 | 236 | 198 | 36.12 |
| AG 10000 050 | 50 | 260 | 210 | 37.71 |
| AG 10000 063 | 63.5 | 287 | 223.5 | 39.49 |
| AG 10000 080 | 80 | 320 | 240 | 41.67 |
| AG 10000 100 | 100 | 360 | 260 | 44.32 |
| AG 10000 125 | 125 | 410 | 285 | 47.63 |
| AG 10000 160 * | 160 | 480 | 320 | 52.25 |
| AG 10000 200 * | 200 | 560 | 360 | 57.54 |
| AG 10000 250 * | 250 | 660 | 410 | 64.16 |
| AG 10000 300 * | 300 | 760 | 460 | 70.77 |

PED 97/23/CE · ISO 11901 · NAAMS · VDI 3003 · CNOMO EM.24.54

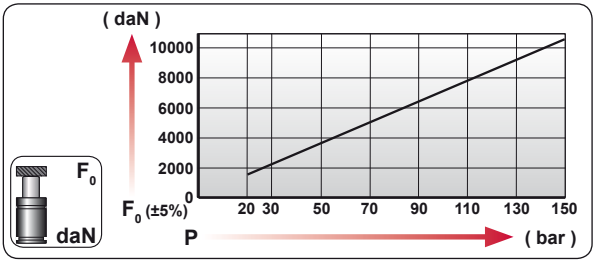


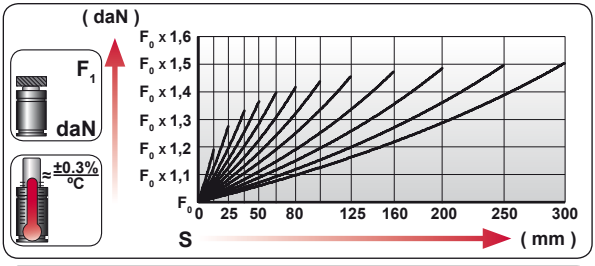


| CODE | | bar | psi | F0 daN | F1 daN |
|---|---|---|---|---|---|
| AG 10000 050 | | 145 | 2105 | 10280 | 14035 |
| AG-H 10000 050 | | 0 | 0 | - - - | - - - |

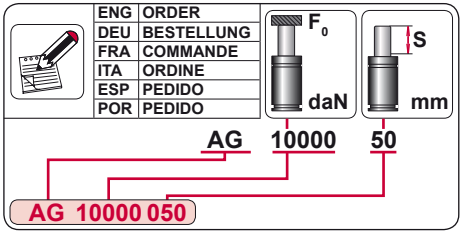


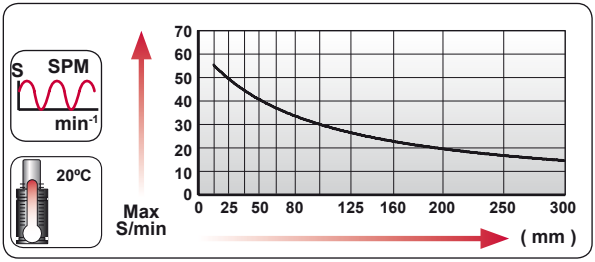


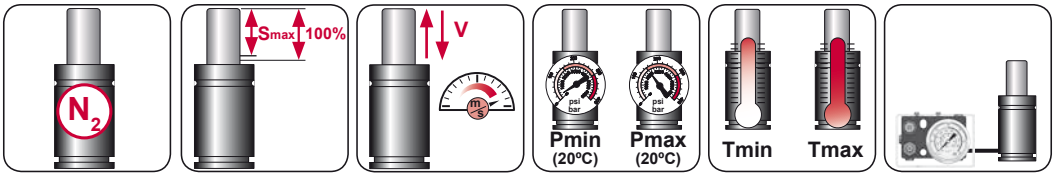


| | | | | | | | |
|---|---|---|---|---|---|---|---|
| $N_2$ | Smax < 90% | Vmax 2 m/s | bar psi 20 290 | bar psi 150 2175 | ºC ºF 0 32 | ºC ºF 80 176 | 600 CP- |

# AZOL GAS AGB-H 10000

ISO

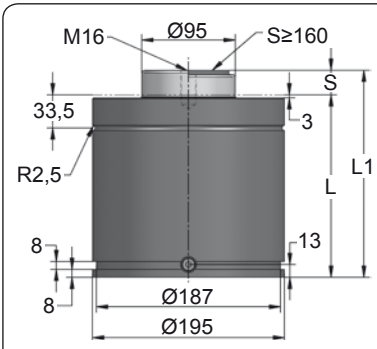


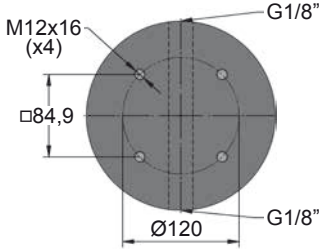


* FS

> Vmax

Flex Rod

FS

| ORDER | S (mm) | L1 ±0,25 (mm) | L (mm) | Kg. |
|---|---|---|---|---|
| AGB-H 10000 012 | 12.7 | 185.4 | 172.7 | 32.77 |
| AGB-H 10000 025 | 25 | 210 | 185 | 34.40 |
| AGB-H 10000 038 | 38 | 236 | 198 | 36.12 |
| AGB-H 10000 050 | 50 | 260 | 210 | 37.71 |
| AGB-H 10000 063 | 63.5 | 287 | 223.5 | 39.49 |
| AGB-H 10000 080 | 80 | 320 | 240 | 41.67 |
| AGB-H 10000 100 | 100 | 360 | 260 | 44.32 |
| AGB-H 10000 125 | 125 | 410 | 285 | 47.63 |
| AGB-H 10000 160 * | 160 | 480 | 320 | 52.25 |
| AGB-H 10000 200 * | 200 | 560 | 360 | 57.54 |
| AGB-H 10000 250 * | 250 | 660 | 410 | 64.16 |
| AGB-H 10000 300 * | 300 | 760 | 460 | 70.77 |

| CODE | | bar | psi | $F_0$ daN | $F_1$ daN |
|---|---|---|---|---|---|
| --------- | | --- | --- | --- | --- |
| AGB-H 10000 050 | | 0 | 0 | --- | --- |

## AG





## AGB-H



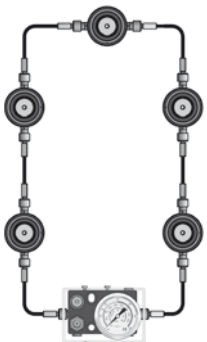








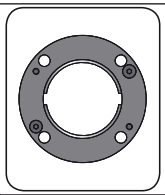

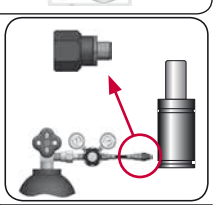

| CODE | AG 10000 050<br>AGB-H 10000 050 | KIT XXXXXXX-S<br>KIT XXXXXXX-C | A14-195 | 18 GA 5<br>SKK 12R 1/8 |
|---|---|---|---|---|
| ENG ORDER | GAS SPRING | REPAIR KIT | FLANGE | CHARGING ADAPTER |
| DEU BESTELLUNG | GASDRUCKFEDER | ERSATZTEILSATZ | FLANSCHE | LADEADAPTER |
| FRA COMMANDE | RESSORT À GAZ | KIT DE RÉPARATION | BRIDE | RACCORD DE CHARGE |
| ITA ORDINE | CILINDRO AD AZOTO | KIT DI MANUTENZIONE | FLANGE | ADATTATORE DI CARICO |
| ESP PEDIDO | RESORTE DE GAS | KIT DE REPARACION | BRIDA | ADAPTADOR DE CARGA |
| POR PEDIDO | CILINDRO DE GÁS | KIT DE MANUTENÇÃO | FLANGE | ADAPTADOR DE CARGA |

# AG 10000 MOUNTS

ISO

AZOL GAS

## A14-195

EM24.54.700/F

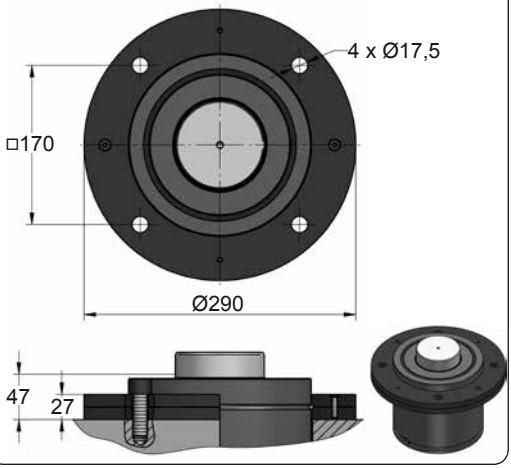


## A34-195

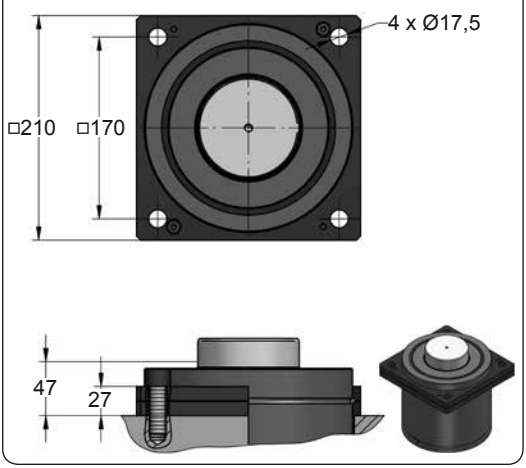


## B21-195

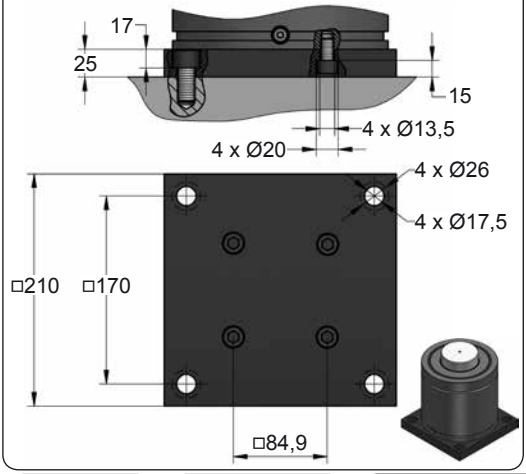


## B76-195

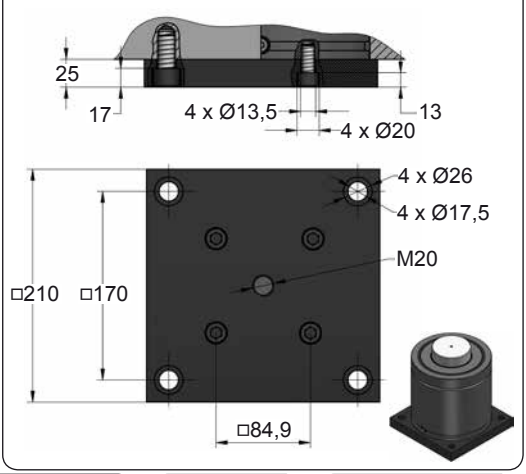









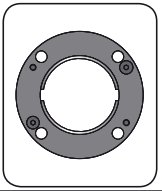

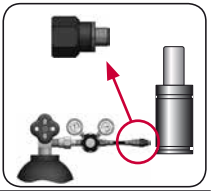

| CODE | | AG 10000 050 | KIT XXXXXXX-S<br>KIT XXXXXXX-C | A14-195 | 18 GA 5 |
|---|---|---|---|---|---|
| ENG | ORDER | GAS SPRING | REPAIR KIT | FLANGE | CHARGING ADAPTER |
| DEU | BESTELLUNG | GASDRUCKFEDER | ERSATZTEILSATZ | FLANSCHE | LADEADAPTER |
| FRA | COMMANDE | RESSORT À GAZ | KIT DE RÉPARATION | BRIDE | RACCORD DE CHARGE |
| ITA | ORDINE | CILINDRO AD AZOTO | KIT DI MANUTENZIONE | FLANGE | ADATTATORE DI CARICO |
| ESP | PEDIDO | RESORTE DE GAS | KIT DE REPARACION | BRIDA | ADAPTADOR DE CARGA |
| POR | PEDIDO | CILINDRO DE GÁS | KIT DE MANUTENÇÃO | FLANGE | ADAPTADOR DE CARGA |

AZOL GAS

# AG 10000 MOUNTS

ISO

## C05-195

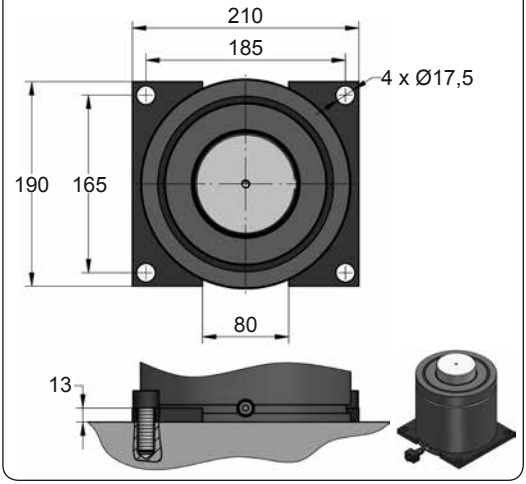


## C20-195

ISO VDI EM24.54.700/F

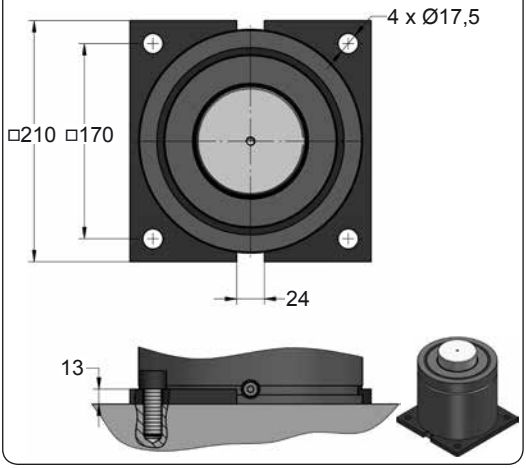


## D02-195

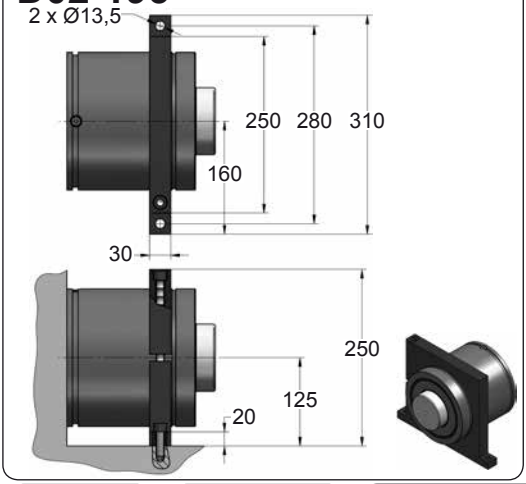









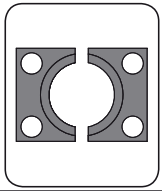

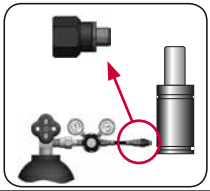

| CODE | | AG 10000 050 | KIT XXXXXXX-S<br>KIT XXXXXXX-C | C05-195 | 18 GA 5 |
|---|---|---|---|---|---|
| ENG | ORDER | GAS SPRING | REPAIR KIT | FLANGE | CHARGING ADAPTER |
| DEU | BESTELLUNG | GASDRUCKFEDER | ERSATZTEILSATZ | FLANSCHE | LADEADAPTER |
| FRA | COMMANDE | RESSORT À GAZ | KIT DE RÉPARATION | BRIDE | RACCORD DE CHARGE |
| ITA | ORDINE | CILINDRO AD AZOTO | KIT DI MANUTENZIONE | FLANGE | ADATTATORE DI CARICO |
| ESP | PEDIDO | RESORTE DE GAS | KIT DE REPARACION | BRIDA | ADAPTADOR DE CARGA |
| POR | PEDIDO | CILINDRO DE GÁS | KIT DE MANUTENÇÃO | FLANGE | ADAPTADOR DE CARGA |

# MOUNTS

ISO

AZOL GAS

## B51-045

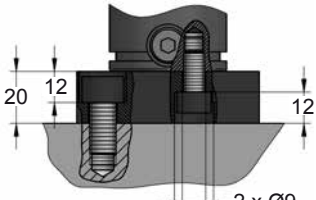


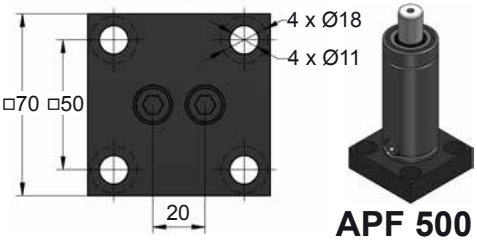


APF 500

## B51-050

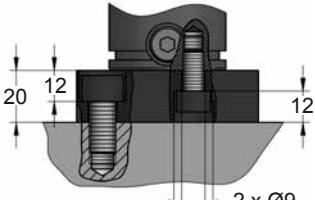


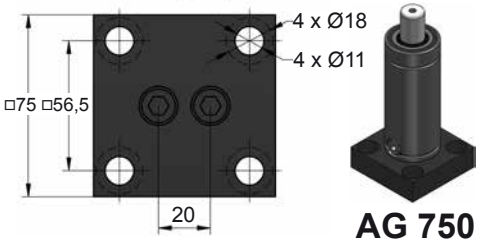


AG 750

AZOL GAS

# MOUNTS
ISO

## B16-095

E24.54.815.G

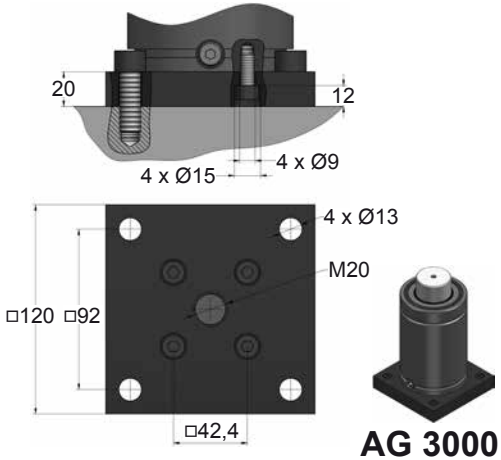


**AG 3000**

## B16-120

E24.54.815.G

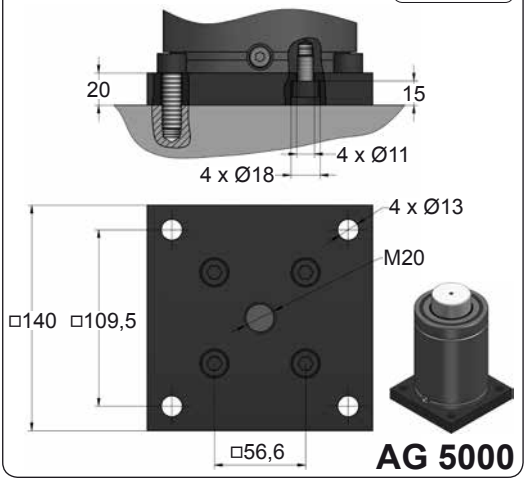


**AG 5000**

## B16-150

E24.54.815.G

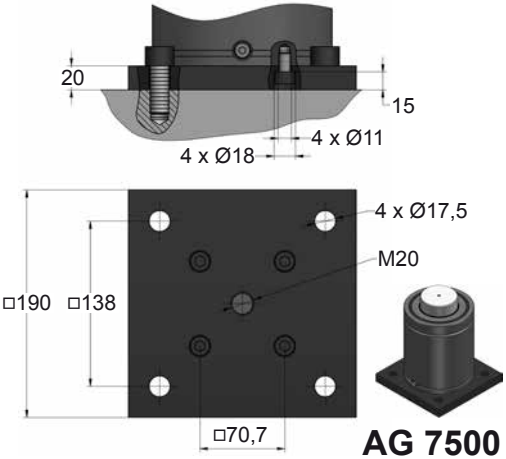


**AG 7500**

AZOL GAS

# CD HEAVY DUTY LARGE

| MODEL | $F_0$ | Ø | S | L1 | Pmax | Charge Port | | |
|---|---|---|---|---|---|---|---|---|
| CD 300 V1 | 300 | Ø32 | 10 - 125 | 70 - 300 | 150 | M6 | ✓ | ✓ |
| CD 500 V1 | 500 | Ø38 | 10 - 125 | 70 - 300 | 150 | M6 | ✓ | ✓ |
| CD 700 | 700 | Ø45 | 12.7 - 160 | 110.4 - 405 | 150 | G1/8" | ✓ | ✓ |
| CD 1000 V1 | 1000 | Ø50 | 13 - 300 | 121 - 695 | 150 | G1/8" | ✓ | ✓ |
| CD 1500 V1 | 1500 | Ø63 | 25 - 200 | 145 - 495 | 150 | G1/8" | ✓ | ✓ |
| CD 2400 | 2400 | Ø75 | 25 - 300 | 160 - 710 | 150 | G1/8" | ✓ | ✓ |
| CD 4200 | 4200 | Ø95 | 25 - 300 | 170 - 720 | 150 | G1/8" | ✓ | ✓ |
| CD 6600 | 6600 | Ø120 | 25 - 300 | 190 - 740 | 150 | G1/8" | ✓ | ✓ |
| CD 9600 | 9600 | Ø150 | 25 - 300 | 205 - 755 | 150 | G1/8" | ✓ | ✓ |
| CD 18500 | 18500 | Ø195 | 25 - 300 | 210 - 760 | 150 | G1/8" | ✓ | ✓ |

| S mm | | 50 Ø50 L1=131 L1=138 L1=152 | 50 Ø50 L1=138 | 50 Ø50 L1=138 L1=150 L1=150 | 50 Ø50 L1=170 L1=185 **L1=195** | 50 Ø50 L1=195 | 50 Ø50 L1=165 L1=190 | 50 Ø50 L1=220 |
|---|---|---|---|---|---|---|---|---|
| Ø mm | | | | | | | | |
| L1 mm | | | | | | | | |
| $F_0$ daN | | 1000 1000 1000 | 1000 | 1000 1000 750 | 750 1000 **1000** | 750 | 1700 2000 | 1800 |
| MODEL | ✕ | CR 1000 CW 1000 KZ 1000 | AS 1000 | CT 1000 CK 1000 FD 750 | GN 750 CM 1000 CD 1000 | AG 750 | CPH 1700 CP 2000 | CS 1800 |
| SERIES | MINI | COMPACT HEIGHT | THREADED | LOW PROFILE | HEAVY DUTY | ISO | HEAVY LOAD | POWER COMPACT STROKE |

# CD 300 V1

*Heavy Duty*

AZOL GAS

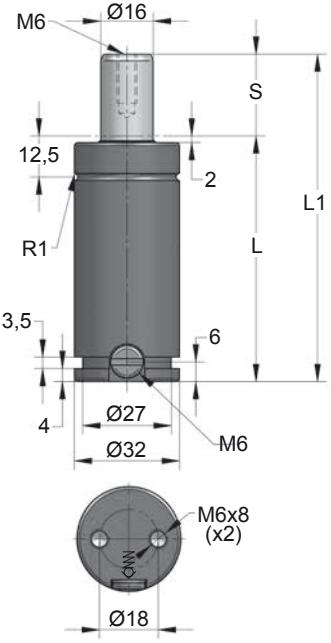


| ORDER | S (mm) | L1 ±0,25 (mm) | L (mm) | Kg. |
|---|---|---|---|---|
| CD 300 010 V1 | 10 | 70 | 60 | 0.29 |
| CD 300 012 V1 | 12.7 | 75.4 | 62.7 | 0.30 |
| CD 300 016 V1 | 16 | 82 | 66 | 0.31 |
| CD 300 025 V1 | 25 | 100 | 75 | 0.35 |
| CD 300 038 V1 | 38 | 126 | 88 | 0.40 |
| CD 300 050 V1 | 50 | 150 | 100 | 0.44 |
| CD 300 063 V1 | 63.5 | 177 | 113.5 | 0.50 |
| CD 300 080 V1 | 80 | 210 | 130 | 0.56 |
| CD 300 100 V1 | 100 | 250 | 150 | 0.64 |
| CD 300 125 V1 | 125 | 300 | 175 | 0.74 |

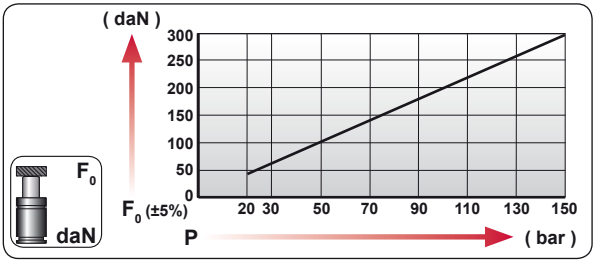


| CODE | bar | psi | $F_0$ daN | $F_1$ daN |
|---|---|---|---|---|
| CD 300 050 V1 | 150 | 2175 | 300 | 470 |
| CD-H 300 050 V1 | 0 | 0 | --- | --- |

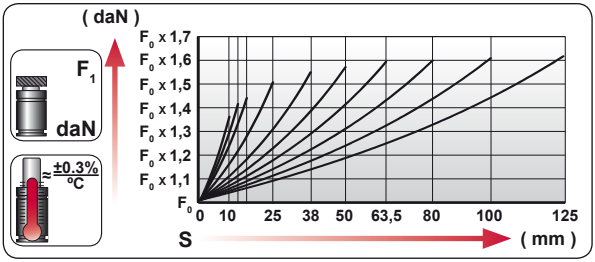


| | |
|---|---|
| ENG | ORDER |
| DEU | BESTELLUNG |
| FRA | COMMANDE |
| ITA | ORDINE |
| ESP | PEDIDO |
| POR | PEDIDO |




CD 300 50

CD 300 050 V1

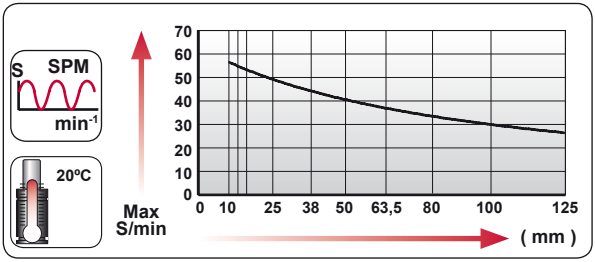


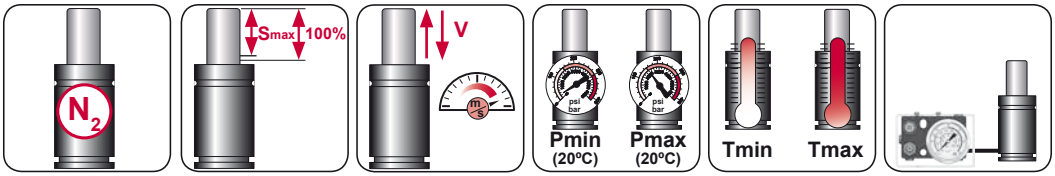


| $N_2$ | Smax < 90% | Vmax 1,6 m/s | bar psi 20 290 | bar psi 150 2175 | °C °F 0 32 | °C °F 80 176 | 600 CP- |
|---|---|---|---|---|---|---|---|

AZOL GAS

# CD 300 V1 MOUNTS

*Heavy Duty*

## A14-032

ISO | E24.54.815.G EM24.54.700/F

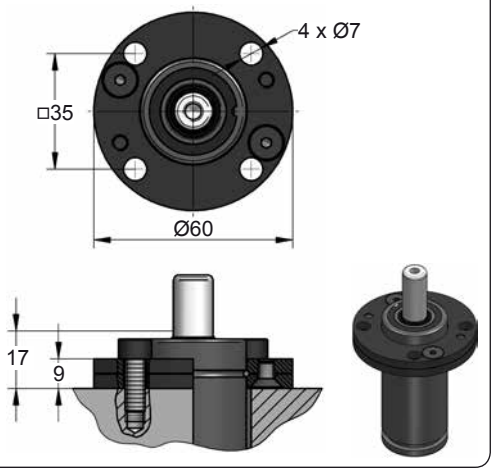


## A34-032

VDI

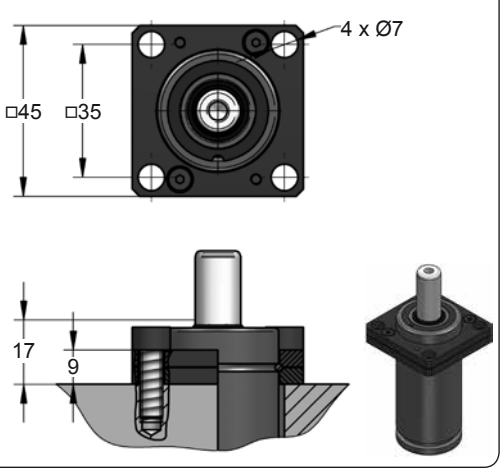


## C20-032

ISO | VDI | E24.54.815.G EM24.54.700/F

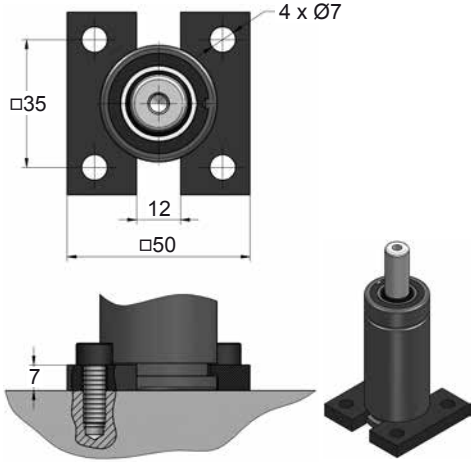


## D02-032

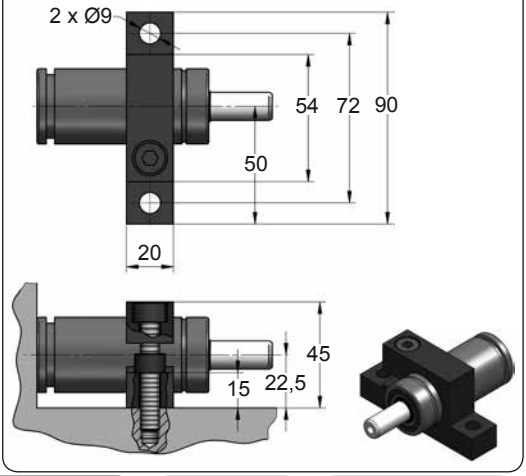









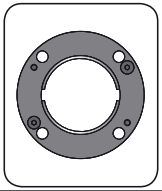

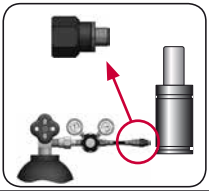

| CODE | | CD 300 050 V1 | KIT XXXXXXX-S<br>KIT XXXXXXX-C | A14-032 | 06 GA 11 |
|---|---|---|---|---|---|
| ENG | ORDER | GAS SPRING | REPAIR KIT | FLANGE | CHARGING ADAPTER |
| DEU | BESTELLUNG | GASDRUCKFEDER | ERSATZTEILSATZ | FLANSCHE | LADEADAPTER |
| FRA | COMMANDE | RESSORT À GAZ | KIT DE RÉPARATION | BRIDE | RACCORD DE CHARGE |
| ITA | ORDINE | CILINDRO AD AZOTO | KIT DI MANUTENZIONE | FLANGE | ADATTATORE DI CARICO |
| ESP | PEDIDO | RESORTE DE GAS | KIT DE REPARACION | BRIDA | ADAPTADOR DE CARGA |
| POR | PEDIDO | CILINDRO DE GÁS | KIT DE MANUTENÇÃO | FLANGE | ADAPTADOR DE CARGA |

# CD 500 V1

*Heavy Duty*

AZOL GAS

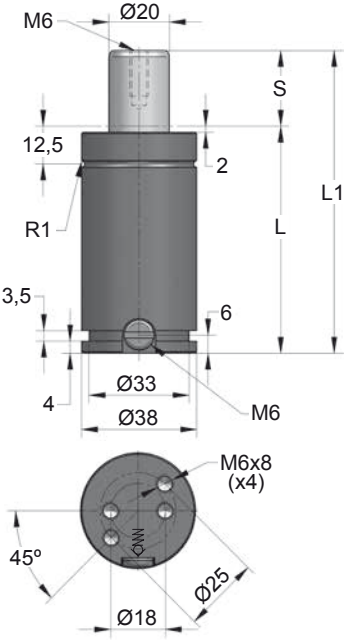


| ORDER | S (mm) | L1 ±0,25 (mm) | L (mm) | Kg. |
|---|---|---|---|---|
| CD 500 010 V1 | 10 | 70 | 60 | 0.40 |
| CD 500 012 V1 | 12.7 | 75.4 | 62.7 | 0.42 |
| CD 500 016 V1 | 16 | 82 | 66 | 0.44 |
| CD 500 025 V1 | 25 | 100 | 75 | 0.48 |
| CD 500 038 V1 | 38 | 126 | 88 | 0.55 |
| CD 500 050 V1 | 50 | 150 | 100 | 0.61 |
| CD 500 063 V1 | 63.5 | 177 | 113.5 | 0.68 |
| CD 500 080 V1 | 80 | 210 | 130 | 0.77 |
| CD 500 100 V1 | 100 | 250 | 150 | 0.87 |
| CD 500 125 V1 | 125 | 300 | 175 | 1.00 |

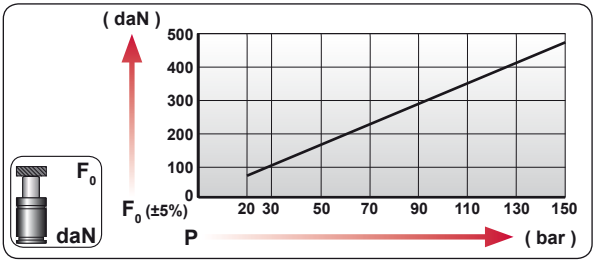


| CODE | bar | psi | $F_0$ daN | $F_1$ daN |
|---|---|---|---|---|
| CD 500 050 V1 | 150 | 1885 | 470 | 730 |
| CD-H 500 050 V1 | 0 | 0 | --- | --- |

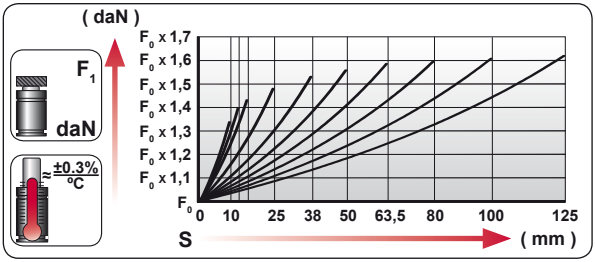


| | |
|---|---|
| ENG | ORDER |
| DEU | BESTELLUNG |
| FRA | COMMANDE |
| ITA | ORDINE |
| ESP | PEDIDO |
| POR | PEDIDO |




CD 500 50

CD 500 050 V1

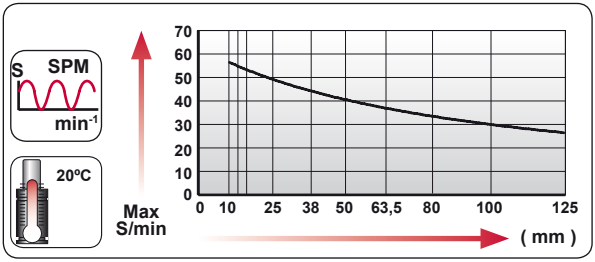


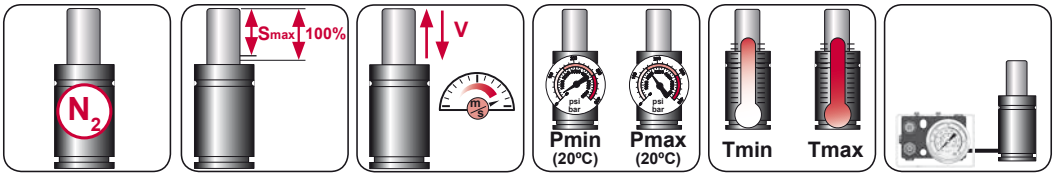


| $N_2$ | Smax < 90% | Vmax 1,6 m/s | bar psi 20 290 | bar psi 150 2175 | °C °F 0 32 | °C °F 80 176 | 600 CP- |
|---|---|---|---|---|---|---|---|

AZOL GAS

# CD 500 V1 MOUNTS

*Heavy Duty*

## A14-038

E24.54.815.G
EM24.54.700/F

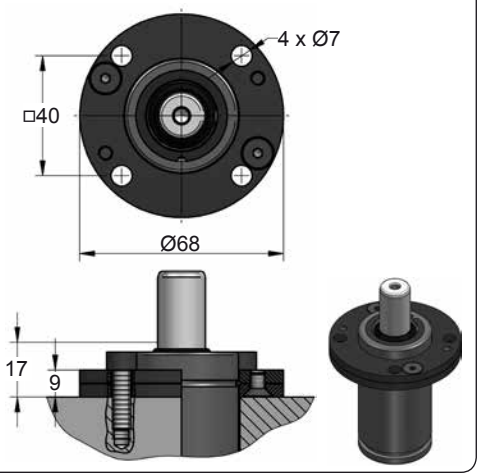


## A34-038

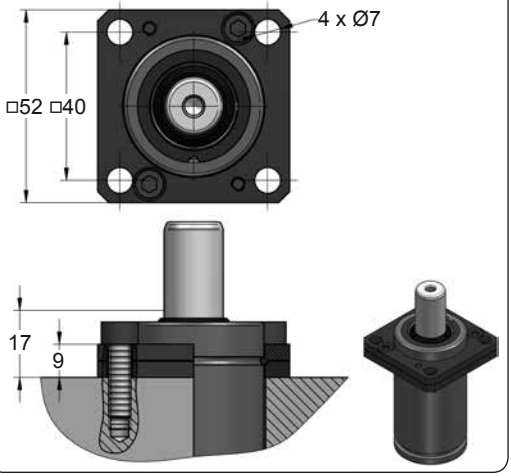


## C20-038

E24.54.815.G
EM24.54.700/F

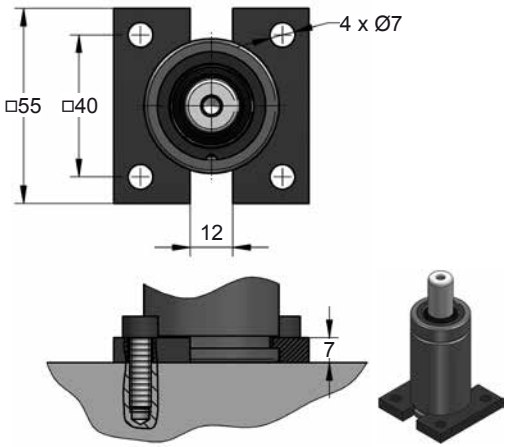


## D02-038

E24.54.815.G

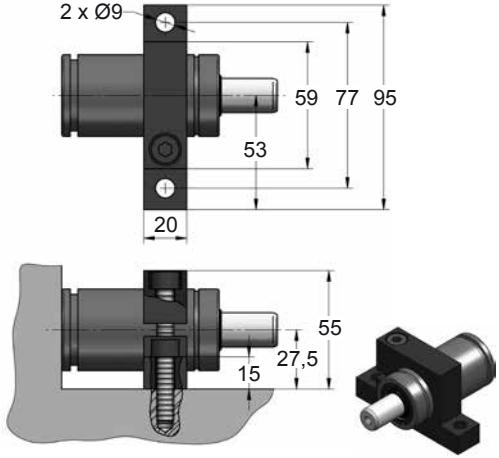









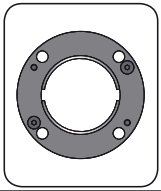

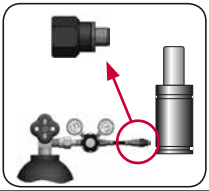

| CODE | | CD 500 050 V1 | KIT XXXXXXX-S<br>KIT XXXXXXX-C | A14-038 | 06 GA 11 |
|---|---|---|---|---|---|
| ENG | ORDER | GAS SPRING | REPAIR KIT | FLANGE | CHARGING ADAPTER |
| DEU | BESTELLUNG | GASDRUCKFEDER | ERSATZTEILSATZ | FLANSCHE | LADEADAPTER |
| FRA | COMMANDE | RESSORT À GAZ | KIT DE RÉPARATION | BRIDE | RACCORD DE CHARGE |
| ITA | ORDINE | CILINDRO AD AZOTO | KIT DI MANUTENZIONE | FLANGE | ADATTATORE DI CARICO |
| ESP | PEDIDO | RESORTE DE GAS | KIT DE REPARACION | BRIDA | ADAPTADOR DE CARGA |
| POR | PEDIDO | CILINDRO DE GÁS | KIT DE MANUTENÇÃO | FLANGE | ADAPTADOR DE CARGA |

# CD 700

*Heavy Duty*

AZOL GAS

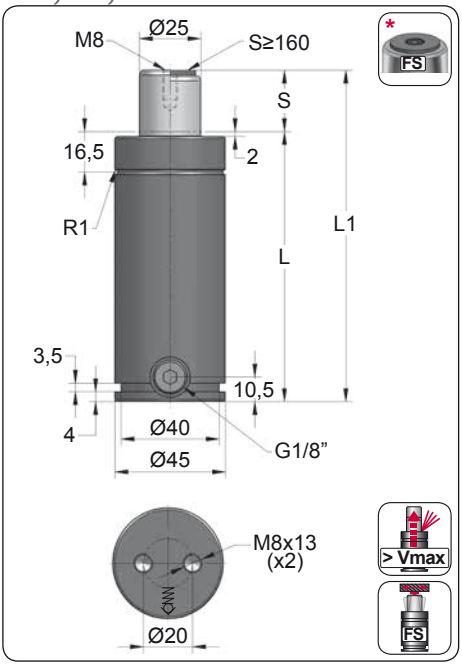


| ORDER | S (mm) | L1 ±0,25 (mm) | L (mm) | Kg. |
|---|---|---|---|---|
| CD 700 012 | 12.7 | 110.4 | 97.7 | 0.98 |
| CD 700 016 | 16 | 117 | 101 | 1.00 |
| CD 700 025 | 25 | 135 | 110 | 1.03 |
| CD 700 038 | 38 | 161 | 123 | 1.06 |
| CD 700 050 | 50 | 185 | 135 | 1.10 |
| CD 700 063 | 63.5 | 212 | 148.5 | 1.18 |
| CD 700 080 | 80 | 245 | 165 | 1.29 |
| CD 700 100 | 100 | 285 | 185 | 1.41 |
| CD 700 125 | 125 | 335 | 210 | 1.56 |
| CD 700 160 * | 160 | 405 | 245 | 1.77 |

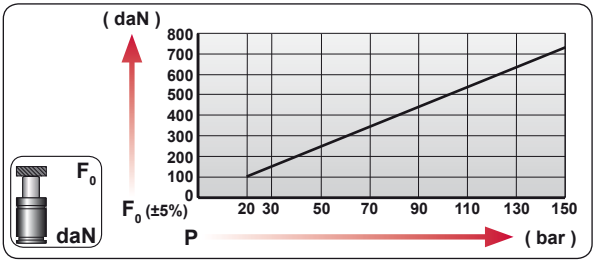


| CODE | bar | psi | F0 daN | F1 daN |
|---|---|---|---|---|
| CD 700 050 | 140 | 2030 | 690 | 1090 |
| CD-H 700 050 | 0 | 0 | --- | --- |

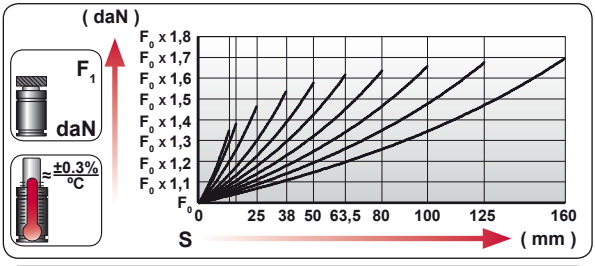


| | |
|---|---|
| ENG | ORDER |
| DEU | BESTELLUNG |
| FRA | COMMANDE |
| ITA | ORDINE |
| ESP | PEDIDO |
| POR | PEDIDO |

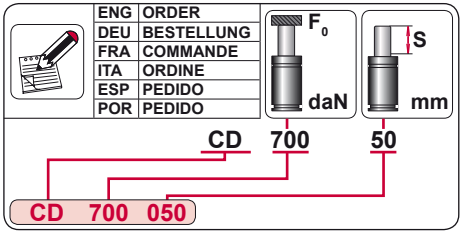


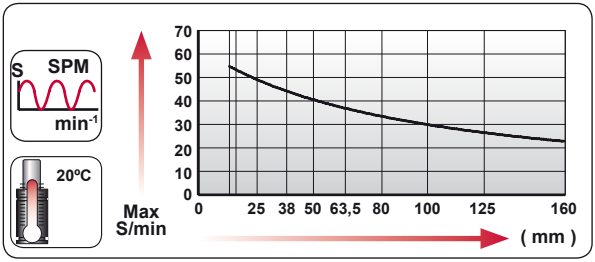


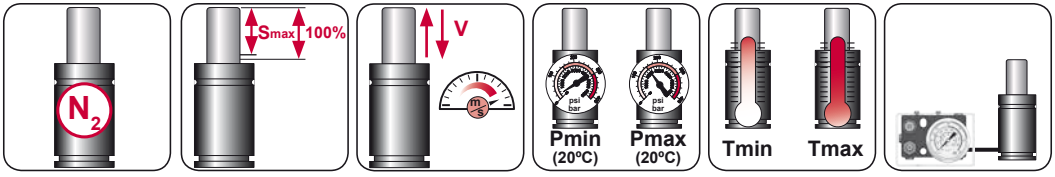


| $N_2$ | Smax < 90% | Vmax 1,6 m/s | bar psi 20 290 | bar psi 150 2175 | ºC ºF 0 32 | ºC ºF 80 176 | 600 CP- |
|---|---|---|---|---|---|---|---|

AZOL GAS

# CD 700 MOUNTS

*Heavy Duty*

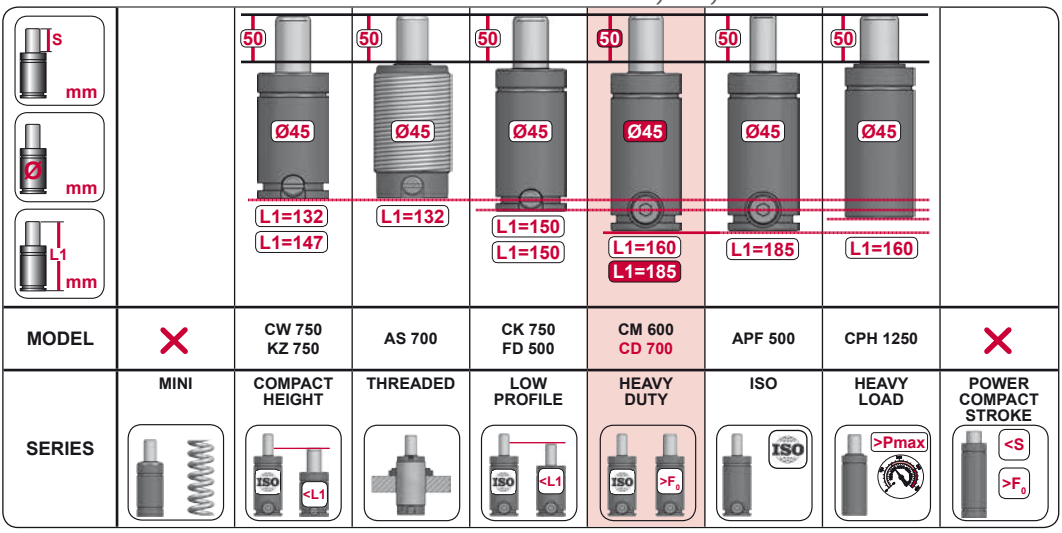


| | | | | | | | | |
|---|---|---|---|---|---|---|---|---|
| **MODEL** | ✕ | CW 750<br>KZ 750 | AS 700 | CK 750<br>FD 500 | CM 600<br>CD 700 | APF 500 | CPH 1250 | ✕ |
| **SERIES** | MINI | COMPACT HEIGHT | THREADED | LOW PROFILE | HEAVY DUTY | ISO | HEAVY LOAD | POWER COMPACT STROKE |

## A14-045

ISO · E24.54.815.G · EM24.54.700/F

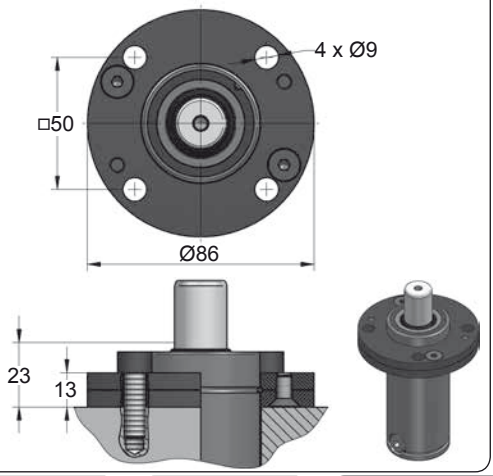


## A34-045

ISO · VDI

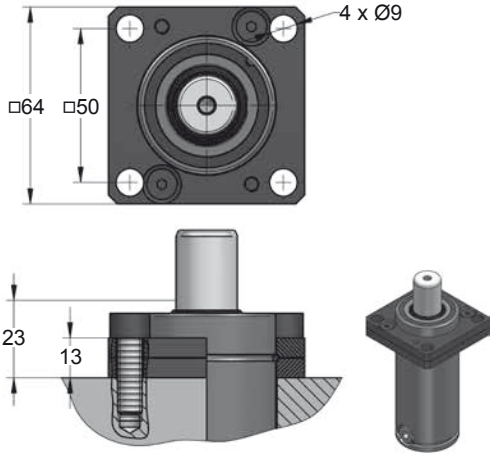









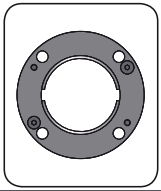

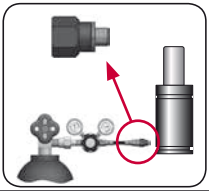

| CODE | | CD 700 050 | KIT XXXXXXX-S<br>KIT XXXXXXX-C | A14-045 | 18 GA 5 |
|---|---|---|---|---|---|
| ENG | ORDER | GAS SPRING | REPAIR KIT | FLANGE | CHARGING ADAPTER |
| DEU | BESTELLUNG | GASDRUCKFEDER | ERSATZTEILSATZ | FLANSCHE | LADEADAPTER |
| FRA | COMMANDE | RESSORT À GAZ | KIT DE RÉPARATION | BRIDE | RACCORD DE CHARGE |
| ITA | ORDINE | CILINDRO AD AZOTO | KIT DI MANUTENZIONE | FLANGE | ADATTATORE DI CARICO |
| ESP | PEDIDO | RESORTE DE GAS | KIT DE REPARACION | BRIDA | ADAPTADOR DE CARGA |
| POR | PEDIDO | CILINDRO DE GÁS | KIT DE MANUTENÇÃO | FLANGE | ADAPTADOR DE CARGA |

# CD 700 MOUNTS

*Heavy Duty*

AZOL GAS

## B21-045

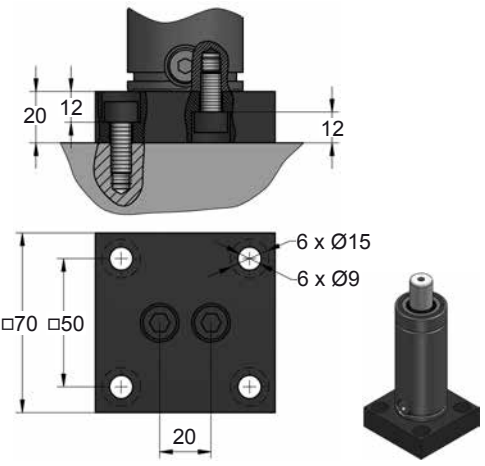


## B51-045

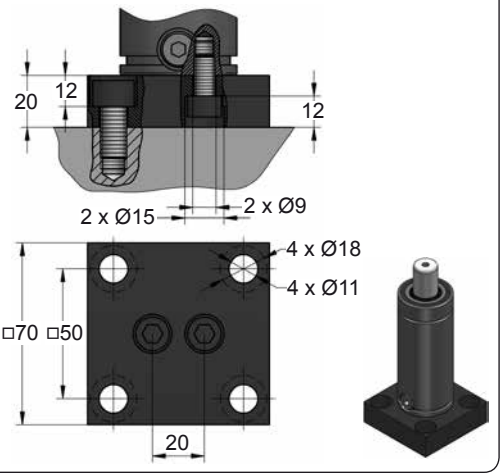


## B76-045

ISO E24.54.815.G

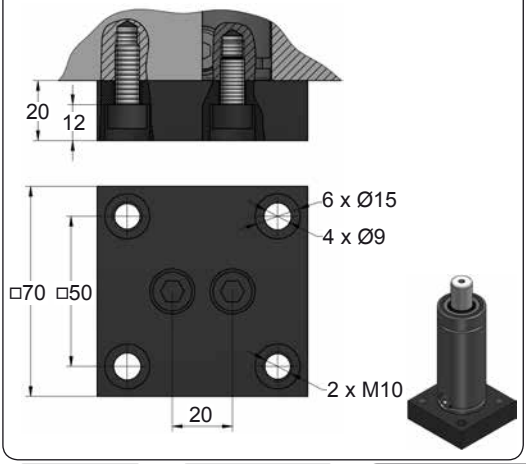









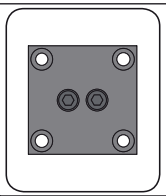

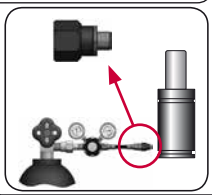

| CODE | | CD 700 050 | KIT XXXXXXX-S<br>KIT XXXXXXX-C | B21-045 | 18 GA 5 |
|---|---|---|---|---|---|
| ENG | ORDER | GAS SPRING | REPAIR KIT | FLANGE | CHARGING ADAPTER |
| DEU | BESTELLUNG | GASDRUCKFEDER | ERSATZTEILSATZ | FLANSCHE | LADEADAPTER |
| FRA | COMMANDE | RESSORT À GAZ | KIT DE RÉPARATION | BRIDE | RACCORD DE CHARGE |
| ITA | ORDINE | CILINDRO AD AZOTO | KIT DI MANUTENZIONE | FLANGE | ADATTATORE DI CARICO |
| ESP | PEDIDO | RESORTE DE GAS | KIT DE REPARACION | BRIDA | ADAPTADOR DE CARGA |
| POR | PEDIDO | CILINDRO DE GÁS | KIT DE MANUTENÇÃO | FLANGE | ADAPTADOR DE CARGA |

AZOL GAS

# CD 700 MOUNTS

*Heavy Duty*

## C05-045

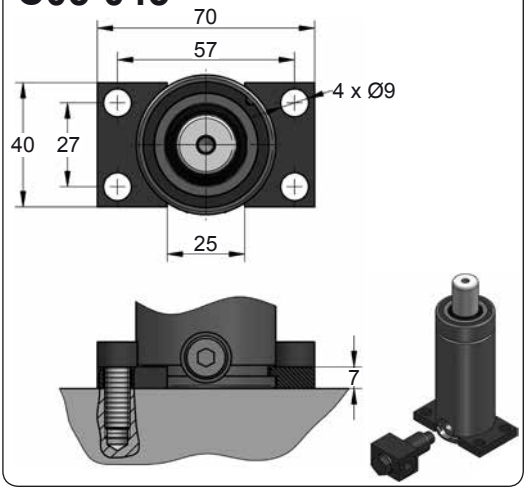


## C20-045

ISO VDI E24.54.815.G EM24.54.700/F

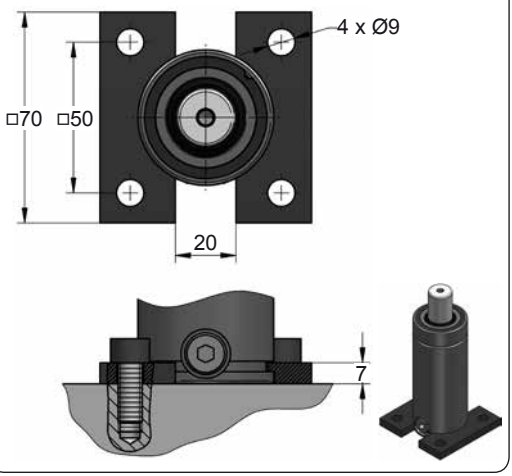


## D02-045

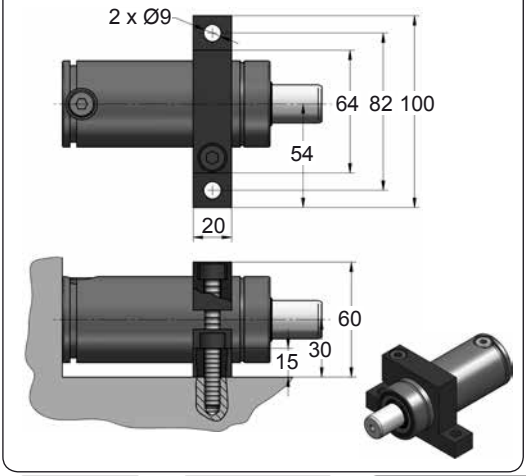


## D67-045

VDI

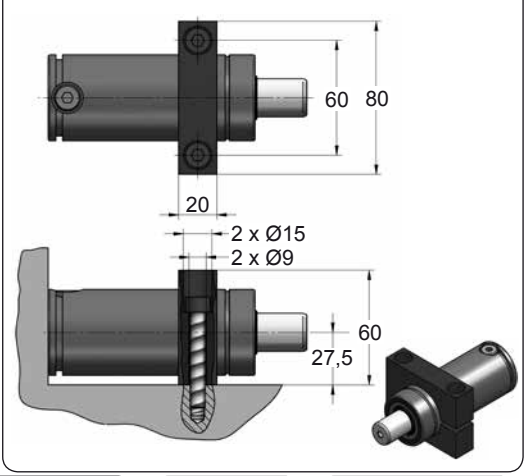









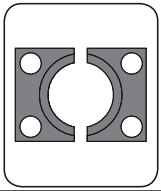

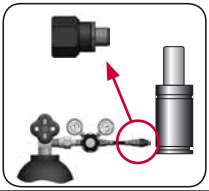

| CODE | | CD 700 050 | KIT XXXXXXX-S<br>KIT XXXXXXX-C | C05-045 | 18 GA 5 |
|---|---|---|---|---|---|
| ENG | ORDER | GAS SPRING | REPAIR KIT | FLANGE | CHARGING ADAPTER |
| DEU | BESTELLUNG | GASDRUCKFEDER | ERSATZTEILSATZ | FLANSCHE | LADEADAPTER |
| FRA | COMMANDE | RESSORT À GAZ | KIT DE RÉPARATION | BRIDE | RACCORD DE CHARGE |
| ITA | ORDINE | CILINDRO AD AZOTO | KIT DI MANUTENZIONE | FLANGE | ADATTATORE DI CARICO |
| ESP | PEDIDO | RESORTE DE GAS | KIT DE REPARACION | BRIDA | ADAPTADOR DE CARGA |
| POR | PEDIDO | CILINDRO DE GÁS | KIT DE MANUTENÇÃO | FLANGE | ADAPTADOR DE CARGA |

# CD 1000

*Heavy Duty*

AZOL GAS

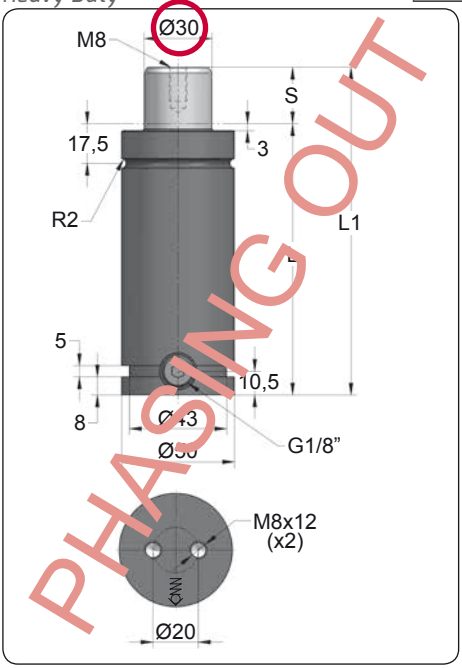


| ORDER | S (mm) | L1 ±0,25 (mm) | L (mm) | Kg. |
|---|---|---|---|---|
| CD 1000 013 | 13 | 121 | 108 | 1.27 |
| CD 1000 025 | 25 | 145 | 120 | 1.40 |
| CD 1000 038 | 38 | 171 | 133 | 1.55 |
| CD 1000 050 | 50 | 195 | 145 | 1.68 |
| CD 1000 063 | 63.5 | 222 | 158.5 | 1.83 |
| CD 1000 080 | 80 | 255 | 175 | 2.01 |
| CD 1000 100 | 100 | 295 | 195 | 2.23 |
| CD 1000 125 | 125 | 345 | 220 | 2.51 |
| CD 1000 160 | 160 | 415 | 255 | 2.90 |
| CD 1000 200 | 200 | 495 | 295 | 3.34 |
| CD 1000 250 | 250 | 595 | 345 | 3.90 |
| CD 1000 300 | 300 | 695 | 395 | 4.45 |

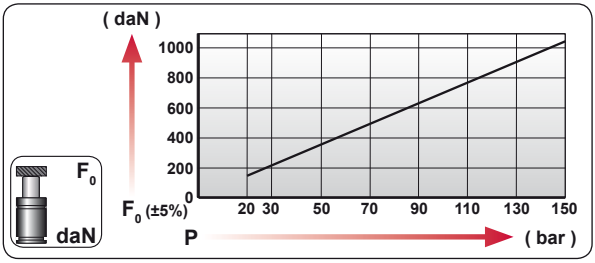


| CODE | bar | psi | F0 daN | F1 daN |
|---|---|---|---|---|
| CD 1000 050 | 140 | 2030 | 990 | 1630 |
| CD-H 1000 050 | 0 | 0 | --- | --- |

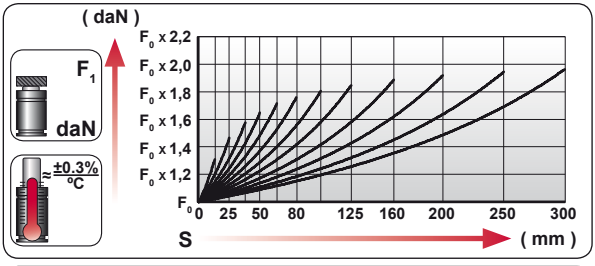


| | |
|---|---|
| ENG | ORDER |
| DEU | BESTELLUNG |
| FRA | COMMANDE |
| ITA | ORDINE |
| ESP | PEDIDO |
| POR | PEDIDO |

F0 daN — S mm

CD 1000 50

CD 1000 050

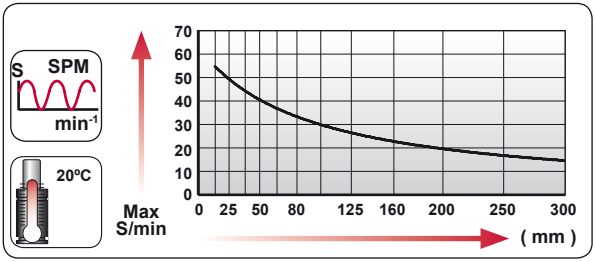


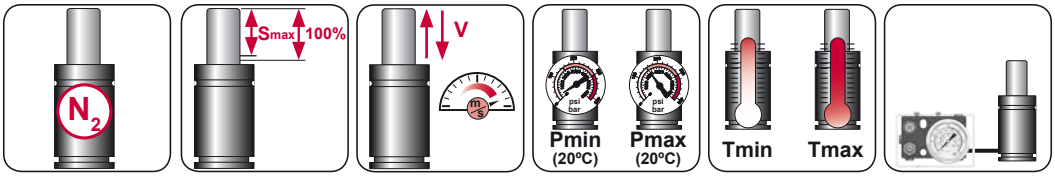


| $N_2$ | Smax < 90% | Vmax 1,6 m/s | bar psi 20 290 | bar psi 150 2175 | ºC ºF 0 32 | ºC ºF 80 176 | 600 CP- |
|---|---|---|---|---|---|---|---|

AZOL GAS

# CD 1000 MOUNTS

*Heavy Duty*

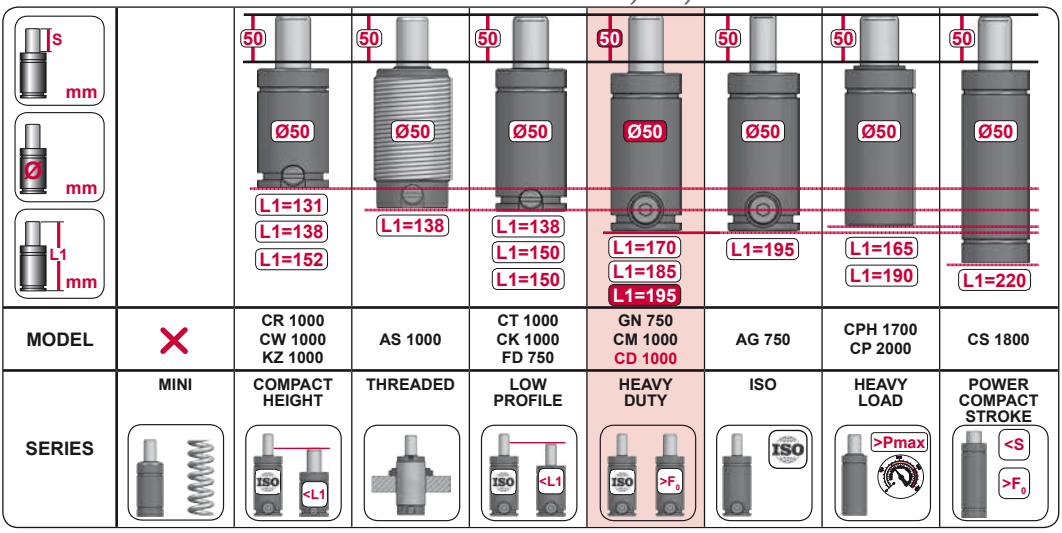


| | | | | | | | | |
|---|---|---|---|---|---|---|---|---|
| **MODEL** | ✕ | CR 1000<br>CW 1000<br>KZ 1000 | AS 1000 | CT 1000<br>CK 1000<br>FD 750 | GN 750<br>CM 1000<br>CD 1000 | AG 750 | CPH 1700<br>CP 2000 | CS 1800 |
| **SERIES** | MINI | COMPACT HEIGHT | THREADED | LOW PROFILE | HEAVY DUTY | ISO | HEAVY LOAD | POWER COMPACT STROKE |




| CODE | | CD 1000 050 | KIT XXXXXXX-S<br>KIT XXXXXXX-C | A14-050 | 18 GA 5 |
|---|---|---|---|---|---|
| ENG | ORDER | GAS SPRING | REPAIR KIT | FLANGE | CHARGING ADAPTER |
| DEU | BESTELLUNG | GASDRUCKFEDER | ERSATZTEILSATZ | FLANSCHE | LADEADAPTER |
| FRA | COMMANDE | RESSORT À GAZ | KIT DE RÉPARATION | BRIDE | RACCORD DE CHARGE |
| ITA | ORDINE | CILINDRO AD AZOTO | KIT DI MANUTENZIONE | FLANGE | ADATTATORE DI CARICO |
| ESP | PEDIDO | RESORTE DE GAS | KIT DE REPARACION | BRIDA | ADAPTADOR DE CARGA |
| POR | PEDIDO | CILINDRO DE GÁS | KIT DE MANUTENÇÃO | FLANGE | ADAPTADOR DE CARGA |

# CD 1000 V1

*Heavy Duty*

AZOL GAS

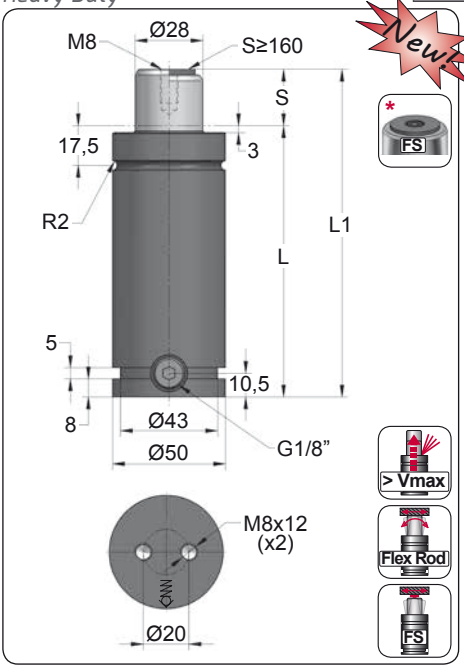


Newt

| ORDER | S (mm) | L1 ±0,25 (mm) | L (mm) | Kg. |
|---|---|---|---|---|
| CD 1000 013 V1 | 13 | 121 | 108 | 1.26 |
| CD 1000 025 V1 | 25 | 145 | 120 | 1.36 |
| CD 1000 038 V1 | 38 | 171 | 133 | 1.47 |
| CD 1000 050 V1 | 50 | 195 | 145 | 1.57 |
| CD 1000 063 V1 | 63.5 | 222 | 158.5 | 1.68 |
| CD 1000 080 V1 | 80 | 255 | 175 | 1.82 |
| CD 1000 100 V1 | 100 | 295 | 195 | 1.99 |
| CD 1000 125 V1 | 125 | 345 | 220 | 2.20 |
| CD 1000 160 V1 * | 160 | 415 | 255 | 2.49 |
| CD 1000 200 V1 * | 200 | 495 | 295 | 2.83 |
| CD 1000 250 V1 * | 250 | 595 | 345 | 3.25 |
| CD 1000 300 V1 * | 300 | 695 | 395 | 3.67 |

PED 97/23/CE

VDI

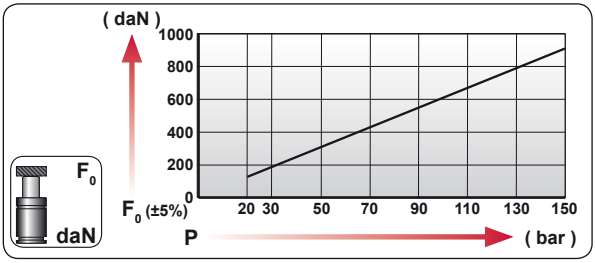


| CODE | bar | psi | $F_0$ daN | $F_1$ daN |
|---|---|---|---|---|
| CD 1000 050 V1 | 150 | 2175 | 925 | 1340 |
| CD-H 1000 050 V1 | 0 | 0 | --- | --- |

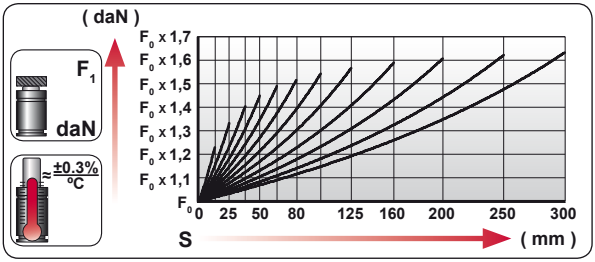


| | |
|---|---|
| ENG | ORDER |
| DEU | BESTELLUNG |
| FRA | COMMANDE |
| ITA | ORDINE |
| ESP | PEDIDO |
| POR | PEDIDO |

$F_0$ daN — S mm

CD 1000 50

CD 1000 050 V1

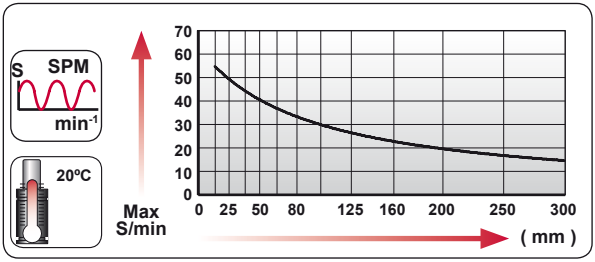


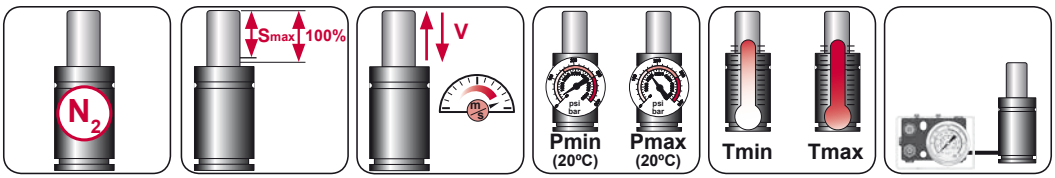


| $N_2$ | Smax < 90% | Vmax 1,6 m/s | bar psi 20 290 | bar psi 150 2175 | °C °F 0 32 | °C °F 80 176 | 600 CP- |
|---|---|---|---|---|---|---|---|

AZOL GAS

# CD 1000 V1 MOUNTS

Heavy Duty

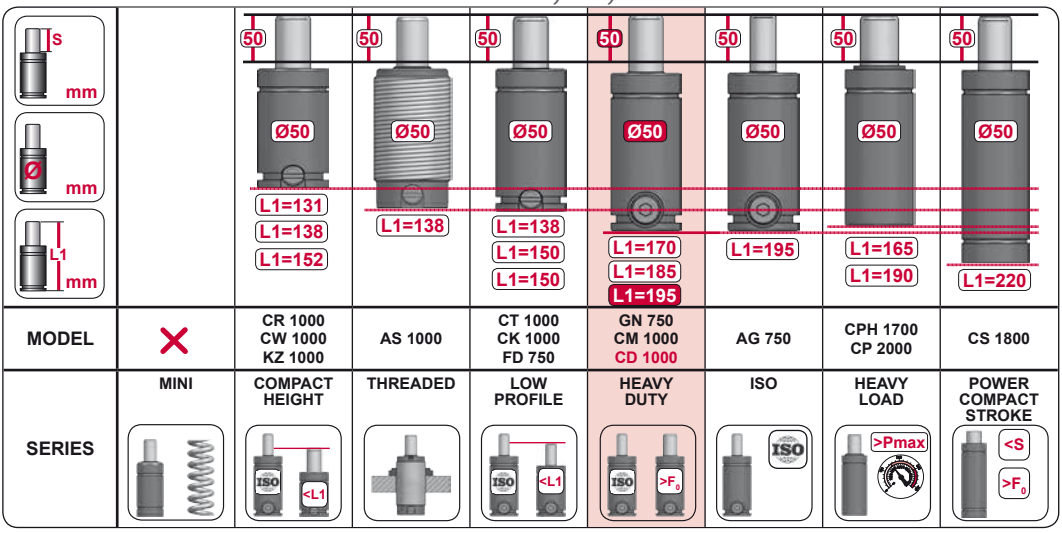


| MODEL | | CR 1000 CW 1000 KZ 1000 | AS 1000 | CT 1000 CK 1000 FD 750 | GN 750 CM 1000 CD 1000 | AG 750 | CPH 1700 CP 2000 | CS 1800 |
|---|---|---|---|---|---|---|---|---|
| SERIES | MINI | COMPACT HEIGHT | THREADED | LOW PROFILE | HEAVY DUTY | ISO | HEAVY LOAD | POWER COMPACT STROKE |

## A14-050

ISO E24.54.815.G EM24.54.700/F

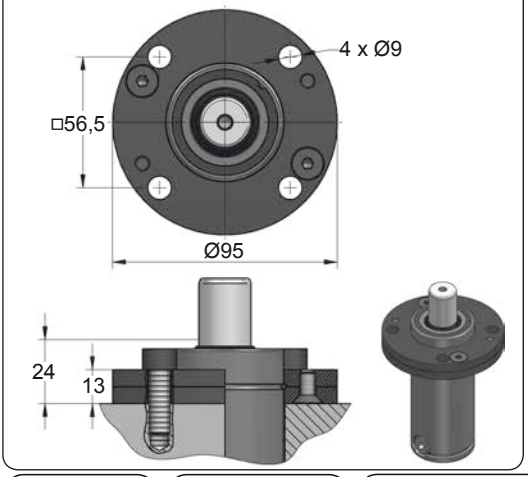


## A34-050

ISO VDI

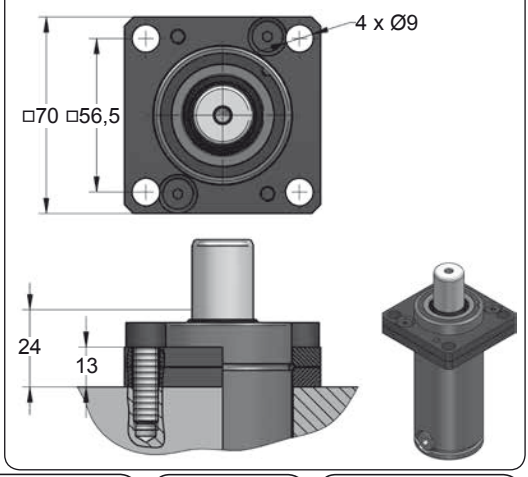









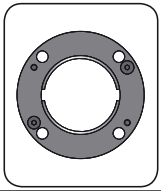

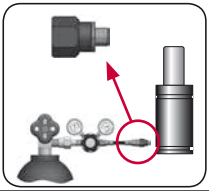

| CODE | | CD 1000 050 V1 | KIT XXXXXXX-S KIT XXXXXXX-C | A14-050 | 18 GA 5 |
|---|---|---|---|---|---|
| ENG | ORDER | GAS SPRING | REPAIR KIT | FLANGE | CHARGING ADAPTER |
| DEU | BESTELLUNG | GASDRUCKFEDER | ERSATZTEILSATZ | FLANSCHE | LADEADAPTER |
| FRA | COMMANDE | RESSORT À GAZ | KIT DE RÉPARATION | BRIDE | RACCORD DE CHARGE |
| ITA | ORDINE | CILINDRO AD AZOTO | KIT DI MANUTENZIONE | FLANGE | ADATTATORE DI CARICO |
| ESP | PEDIDO | RESORTE DE GAS | KIT DE REPARACION | BRIDA | ADAPTADOR DE CARGA |
| POR | PEDIDO | CILINDRO DE GÁS | KIT DE MANUTENÇÃO | FLANGE | ADAPTADOR DE CARGA |

# CD 1000 V1 MOUNTS

*Heavy Duty*

AZOL GAS

## B21-050

EM24.54.700/F

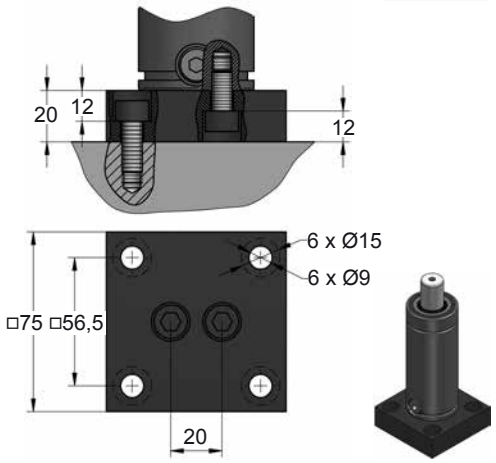


## B51-050

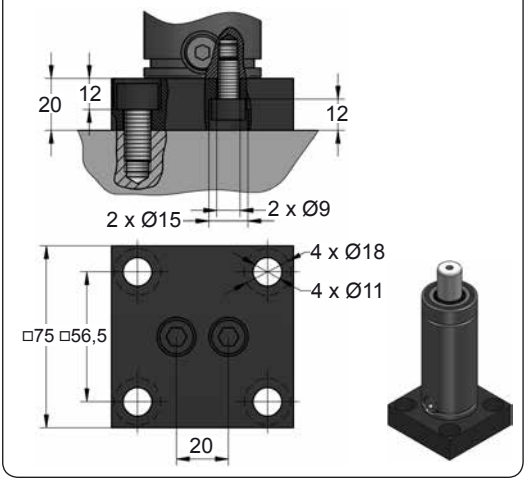


## B76-050

ISO E24.54.815.G EM24.54.700/F

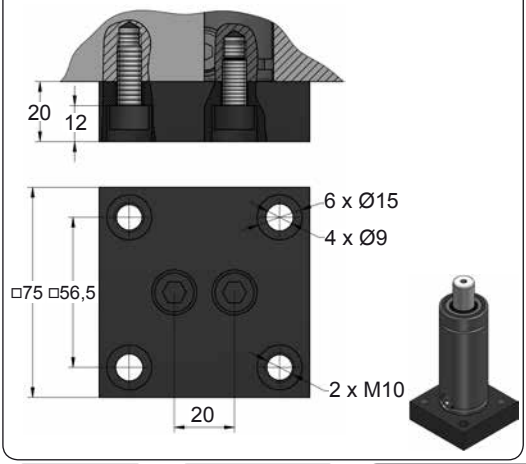









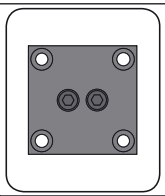

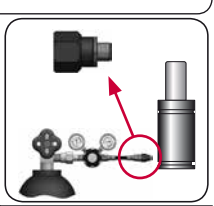

| CODE | | CD 1000 050 V1 | KIT XXXXXXX-S<br>KIT XXXXXXX-C | B21-050 | 18 GA 5 |
|---|---|---|---|---|---|
| ENG | ORDER | GAS SPRING | REPAIR KIT | FLANGE | CHARGING ADAPTER |
| DEU | BESTELLUNG | GASDRUCKFEDER | ERSATZTEILSATZ | FLANSCHE | LADEADAPTER |
| FRA | COMMANDE | RESSORT À GAZ | KIT DE RÉPARATION | BRIDE | RACCORD DE CHARGE |
| ITA | ORDINE | CILINDRO AD AZOTO | KIT DI MANUTENZIONE | FLANGE | ADATTATORE DI CARICO |
| ESP | PEDIDO | RESORTE DE GAS | KIT DE REPARACION | BRIDA | ADAPTADOR DE CARGA |
| POR | PEDIDO | CILINDRO DE GÁS | KIT DE MANUTENÇÃO | FLANGE | ADAPTADOR DE CARGA |

AZOL GAS

# CD 1000 V1 *MOUNTS*

*Heavy Duty*

## C05-050

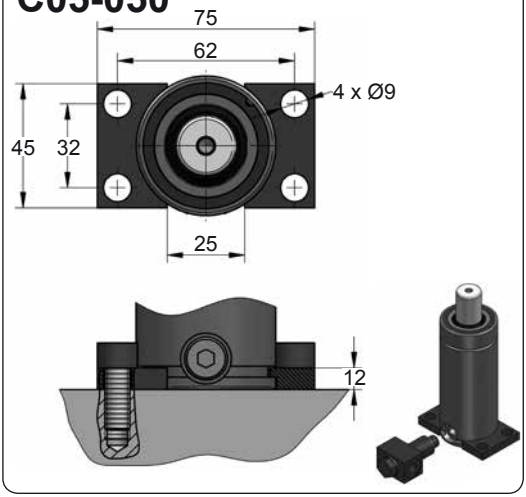


## C20-050

ISO VDI E24.54.815.G EM24.54.700/F

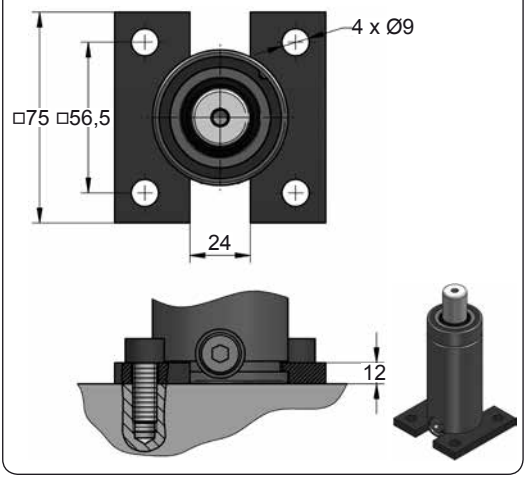


## D02-050

ISO E24.54.815.G EM24.54.700/F

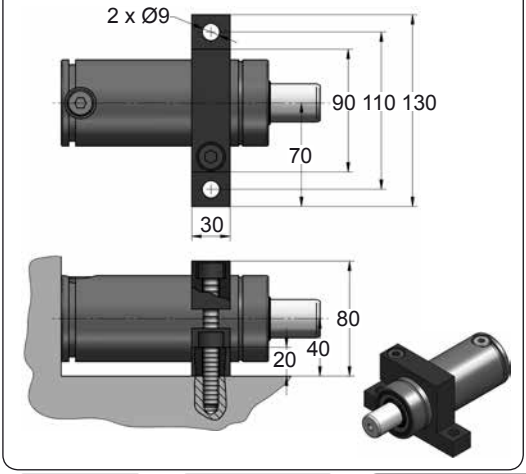


## D67-050

VDI

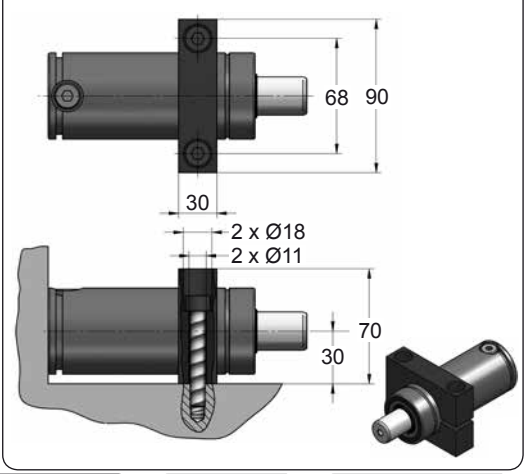









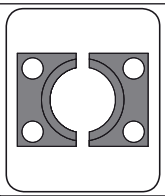

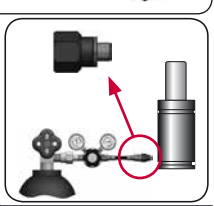

| CODE | | CD 1000 050 V1 | KIT XXXXXXX-S<br>KIT XXXXXXX-C | C05-050 | 18 GA 5 |
|---|---|---|---|---|---|
| ENG | ORDER | GAS SPRING | REPAIR KIT | FLANGE | CHARGING ADAPTER |
| DEU | BESTELLUNG | GASDRUCKFEDER | ERSATZTEILSATZ | FLANSCHE | LADEADAPTER |
| FRA | COMMANDE | RESSORT À GAZ | KIT DE RÉPARATION | BRIDE | RACCORD DE CHARGE |
| ITA | ORDINE | CILINDRO AD AZOTO | KIT DI MANUTENZIONE | FLANGE | ADATTATORE DI CARICO |
| ESP | PEDIDO | RESORTE DE GAS | KIT DE REPARACION | BRIDA | ADAPTADOR DE CARGA |
| POR | PEDIDO | CILINDRO DE GÁS | KIT DE MANUTENÇÃO | FLANGE | ADAPTADOR DE CARGA |

# CD 1500

*Heavy Duty*

AZOL GAS

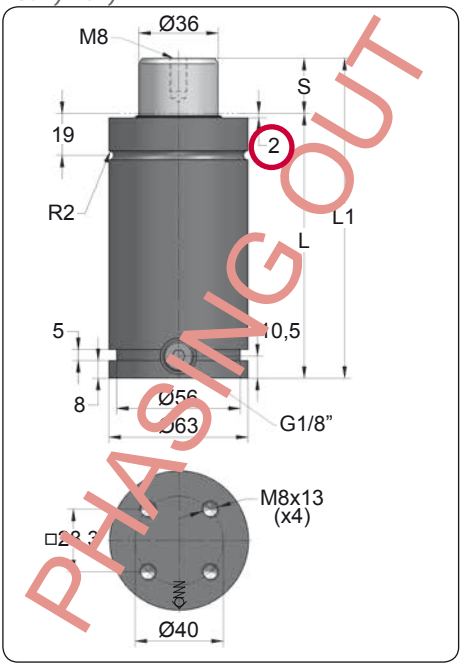


| ORDER | S (mm) | L1 ±0,25 (mm) | L (mm) | Kg. |
|---|---|---|---|---|
| CD 1500 025 | 25 | 145 | 120 | 2.26 |
| CD 1500 038 | 38 | 171 | 133 | 2.45 |
| CD 1500 050 | 50 | 195 | 145 | 2.64 |
| CD 1500 063 | 63 | 221 | 158 | 2.83 |
| CD 1500 080 | 80 | 255 | 175 | 3.10 |
| CD 1500 100 | 100 | 295 | 195 | 3.40 |
| CD 1500 125 | 125 | 345 | 220 | 3.78 |
| CD 1500 160 | 160 | 415 | 255 | 4.31 |
| CD 1500 200 | 200 | 495 | 295 | 4.92 |

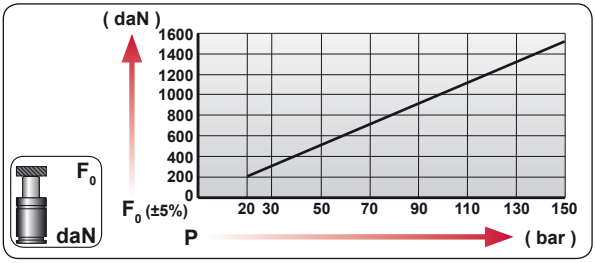


| CODE | bar | psi | $F_0$ daN | $F_1$ daN |
|---|---|---|---|---|
| CD 1500 050 | 150 | 2175 | 1530 | 2525 |
| CD-H 1500 050 | 0 | 0 | --- | --- |

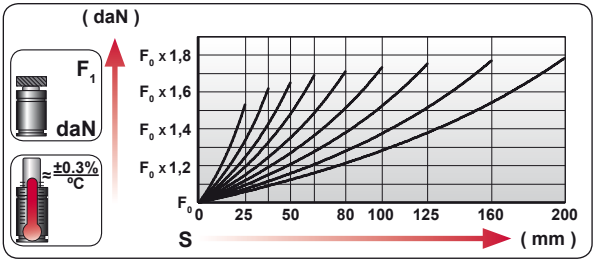


| | |
|---|---|
| ENG | ORDER |
| DEU | BESTELLUNG |
| FRA | COMMANDE |
| ITA | ORDINE |
| ESP | PEDIDO |
| POR | PEDIDO |

$F_0$ daN — S mm

CD 1500 50

CD 1500 050

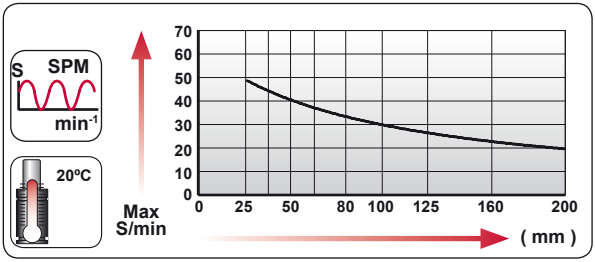


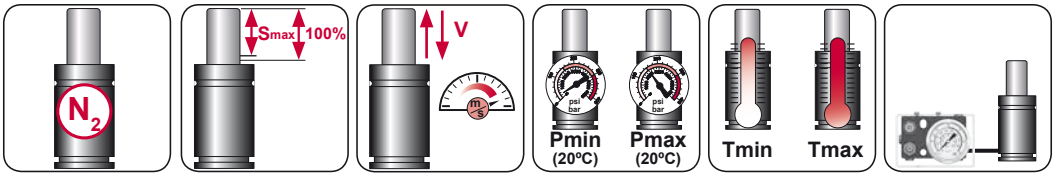


| $N_2$ | Smax < 90% | Vmax 1,6 m/s | bar psi 20 290 | bar psi 150 2175 | ºC ºF 0 32 | ºC ºF 80 176 | 600 CP- |
|---|---|---|---|---|---|---|---|

AZOL GAS

# CD 1500 MOUNTS

*Heavy Duty*

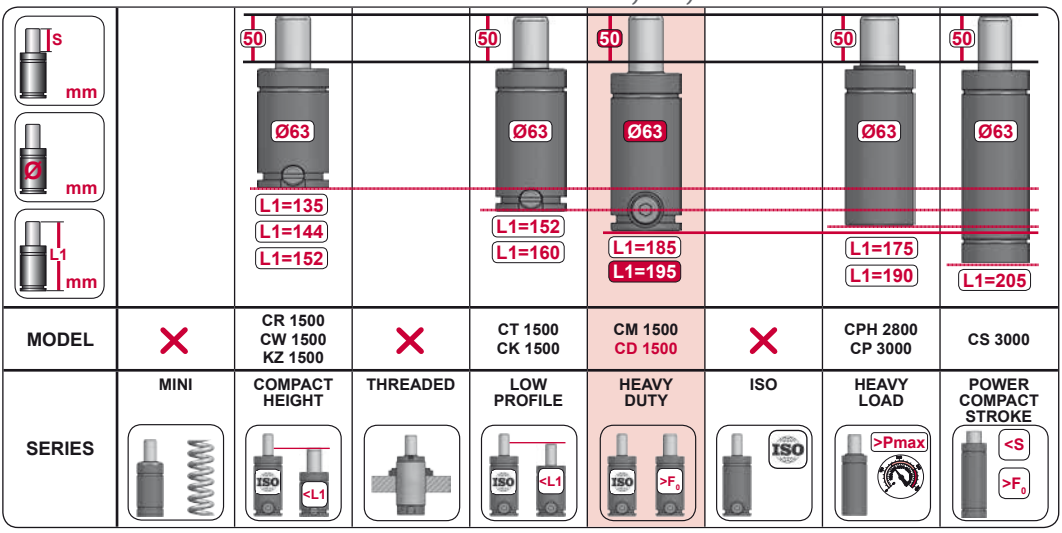





| CODE | | CD 1500 050 | KIT XXXXXXX-S<br>KIT XXXXXXX-C | A14-063 | 18 GA 5 |
|---|---|---|---|---|---|
| ENG | ORDER | GAS SPRING | REPAIR KIT | FLANGE | CHARGING ADAPTER |
| DEU | BESTELLUNG | GASDRUCKFEDER | ERSATZTEILSATZ | FLANSCHE | LADEADAPTER |
| FRA | COMMANDE | RESSORT À GAZ | KIT DE RÉPARATION | BRIDE | RACCORD DE CHARGE |
| ITA | ORDINE | CILINDRO AD AZOTO | KIT DI MANUTENZIONE | FLANGE | ADATTATORE DI CARICO |
| ESP | PEDIDO | RESORTE DE GAS | KIT DE REPARACION | BRIDA | ADAPTADOR DE CARGA |
| POR | PEDIDO | CILINDRO DE GÁS | KIT DE MANUTENÇÃO | FLANGE | ADAPTADOR DE CARGA |

# CD 1500 V1

*Heavy Duty*

AZOL GAS

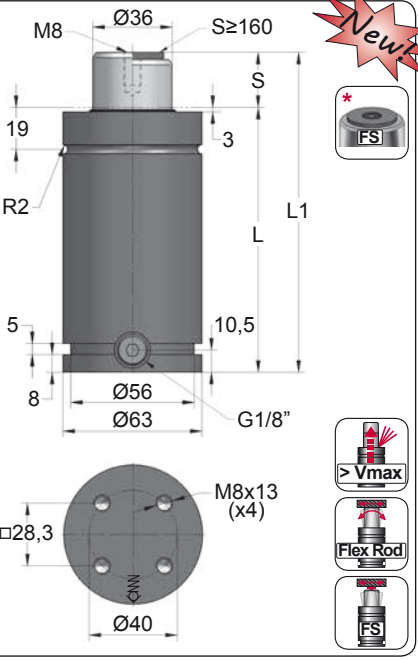


| ORDER | S (mm) | L1 ±0,25 (mm) | L (mm) | Kg. |
|---|---|---|---|---|
| CD 1500 025 V1 | 25 | 145 | 120 | 2.26 |
| CD 1500 038 V1 | 38 | 171 | 133 | 2.45 |
| CD 1500 050 V1 | 50 | 195 | 145 | 2.64 |
| CD 1500 063 V1 | 63 | 221 | 158 | 2.83 |
| CD 1500 080 V1 | 80 | 255 | 175 | 3.10 |
| CD 1500 100 V1 | 100 | 295 | 195 | 3.40 |
| CD 1500 125 V1 | 125 | 345 | 220 | 3.78 |
| CD 1500 160 V1 * | 160 | 415 | 255 | 4.31 |
| CD 1500 200 V1 * | 200 | 495 | 295 | 4.92 |

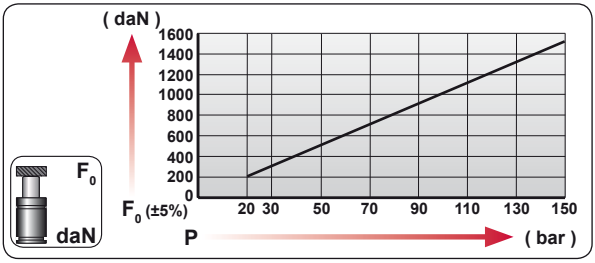


| CODE | bar | psi | $F_0$ daN | $F_1$ daN |
|---|---|---|---|---|
| CD 1500 050 V1 | 150 | 2175 | 1530 | 2525 |
| CD-H 1500 050 V1 | 0 | 0 | --- | --- |

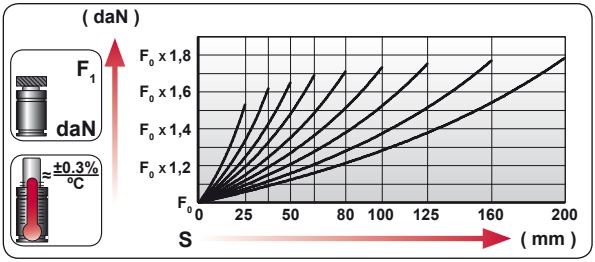


| | |
|---|---|
| ENG | ORDER |
| DEU | BESTELLUNG |
| FRA | COMMANDE |
| ITA | ORDINE |
| ESP | PEDIDO |
| POR | PEDIDO |

$F_0$ daN — S mm

CD 1500 50

CD 1500 050 V1

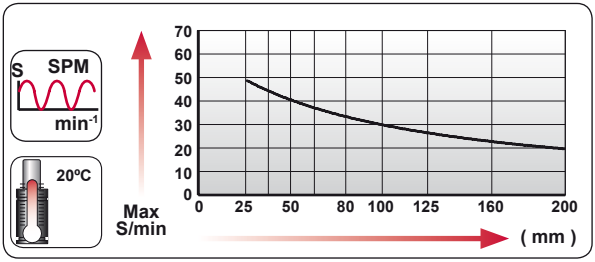


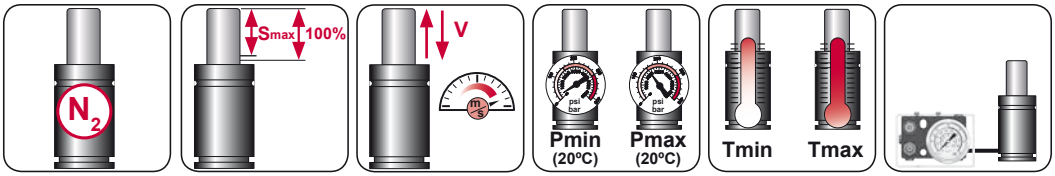


| $N_2$ | Smax < 90% | Vmax 1,6 m/s | bar psi 20 290 | bar psi 150 2175 | ºC ºF 0 32 | ºC ºF 80 176 | 600 CP- |
|---|---|---|---|---|---|---|---|

AZOL GAS

# CD 1500 V1 MOUNTS

*Heavy Duty*

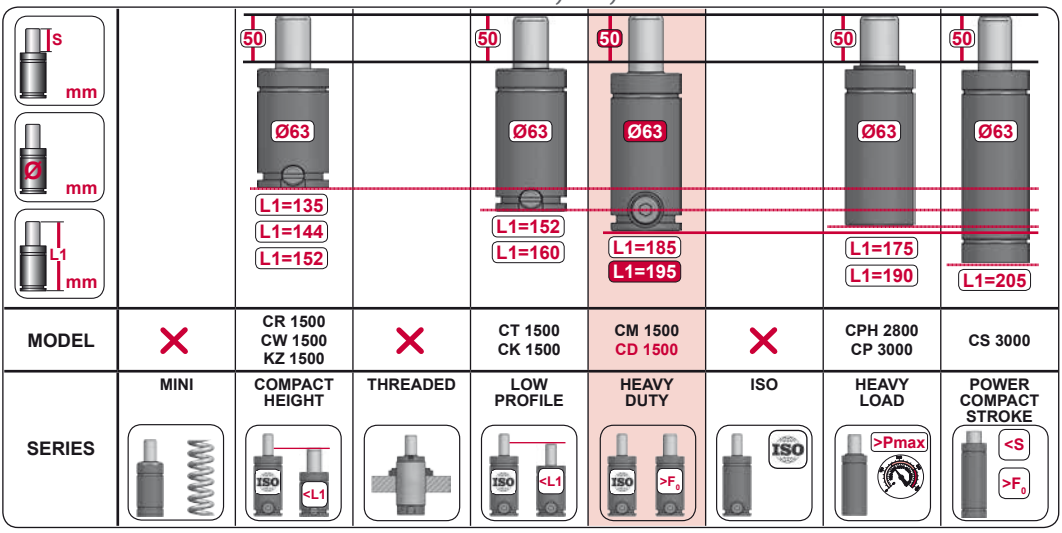


## A14-063

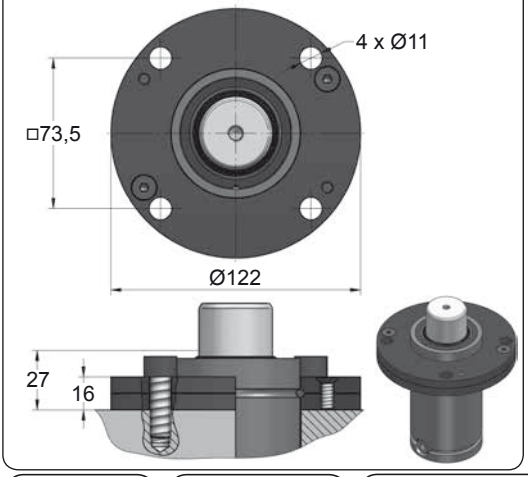


## A39-063

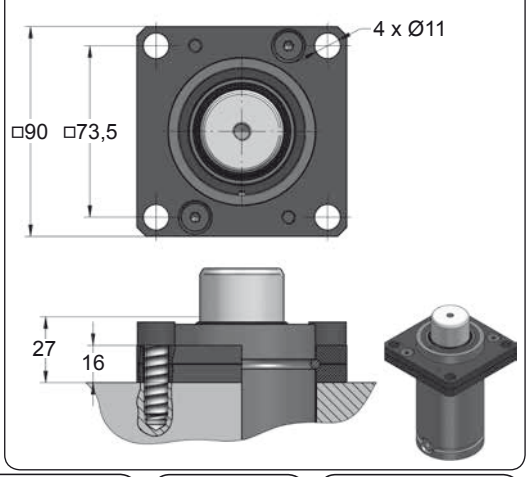





| CODE | | CD 1500 050 V1 | KIT XXXXXXX-S<br>KIT XXXXXXX-C | A14-063 | 18 GA 5 |
|---|---|---|---|---|---|
| ENG | ORDER | GAS SPRING | REPAIR KIT | FLANGE | CHARGING ADAPTER |
| DEU | BESTELLUNG | GASDRUCKFEDER | ERSATZTEILSATZ | FLANSCHE | LADEADAPTER |
| FRA | COMMANDE | RESSORT À GAZ | KIT DE RÉPARATION | BRIDE | RACCORD DE CHARGE |
| ITA | ORDINE | CILINDRO AD AZOTO | KIT DI MANUTENZIONE | FLANGE | ADATTATORE DI CARICO |
| ESP | PEDIDO | RESORTE DE GAS | KIT DE REPARACION | BRIDA | ADAPTADOR DE CARGA |
| POR | PEDIDO | CILINDRO DE GÁS | KIT DE MANUTENÇÃO | FLANGE | ADAPTADOR DE CARGA |

# CD 1500 V1 MOUNTS

*Heavy Duty*

AZOL GAS

## A69-063

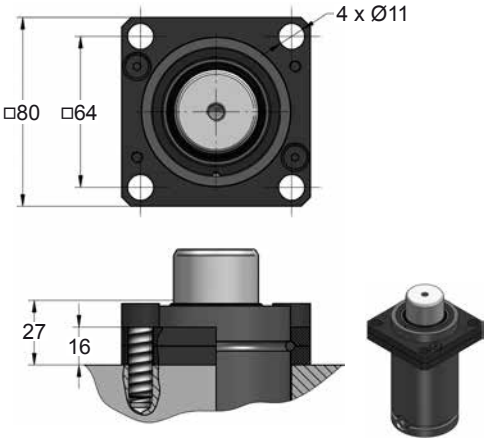


## C05-063

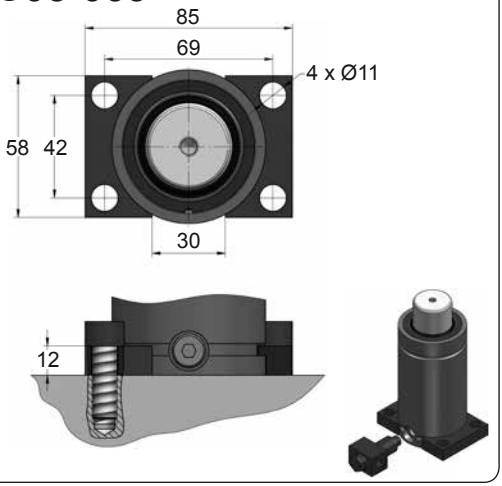


## C30-063

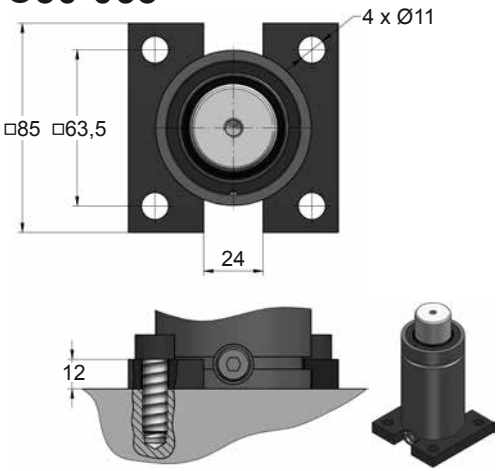


## C35-063

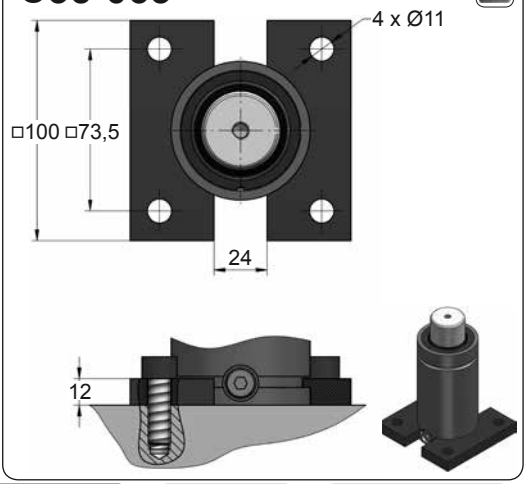









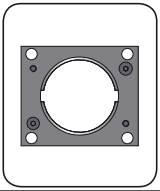

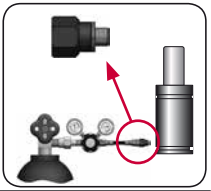

| CODE | | CD 1500 050 V1 | KIT XXXXXXX-S<br>KIT XXXXXXX-C | A69-063 | 18 GA 5 |
|---|---|---|---|---|---|
| ENG | ORDER | GAS SPRING | REPAIR KIT | FLANGE | CHARGING ADAPTER |
| DEU | BESTELLUNG | GASDRUCKFEDER | ERSATZTEILSATZ | FLANSCHE | LADEADAPTER |
| FRA | COMMANDE | RESSORT À GAZ | KIT DE RÉPARATION | BRIDE | RACCORD DE CHARGE |
| ITA | ORDINE | CILINDRO AD AZOTO | KIT DI MANUTENZIONE | FLANGE | ADATTATORE DI CARICO |
| ESP | PEDIDO | RESORTE DE GAS | KIT DE REPARACION | BRIDA | ADAPTADOR DE CARGA |
| POR | PEDIDO | CILINDRO DE GÁS | KIT DE MANUTENÇÃO | FLANGE | ADAPTADOR DE CARGA |

AZOL GAS

# CD 1500 V1 *MOUNTS*

*Heavy Duty*

## D02-063

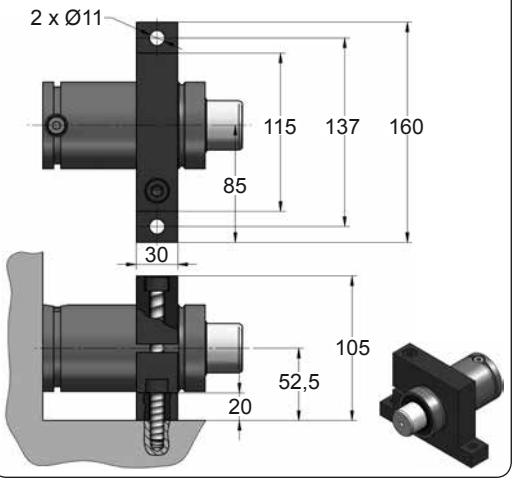


## D67-063

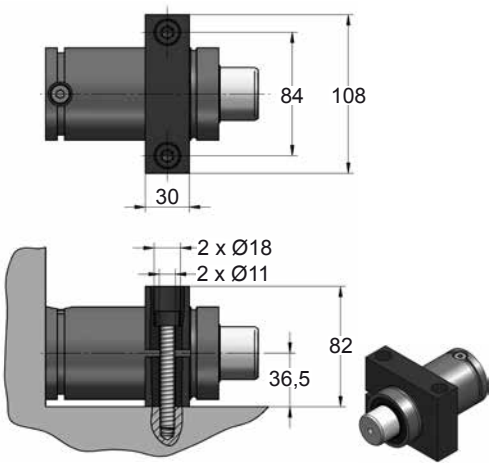









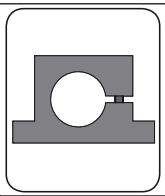

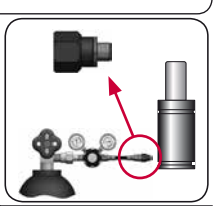

| CODE | | CD 1500 050 V1 | KIT XXXXXXX-S<br>KIT XXXXXXX-C | D02-063 | 18 GA 5 |
|---|---|---|---|---|---|
| ENG | ORDER | GAS SPRING | REPAIR KIT | FLANGE | CHARGING ADAPTER |
| DEU | BESTELLUNG | GASDRUCKFEDER | ERSATZTEILSATZ | FLANSCHE | LADEADAPTER |
| FRA | COMMANDE | RESSORT À GAZ | KIT DE RÉPARATION | BRIDE | RACCORD DE CHARGE |
| ITA | ORDINE | CILINDRO AD AZOTO | KIT DI MANUTENZIONE | FLANGE | ADATTATORE DI CARICO |
| ESP | PEDIDO | RESORTE DE GAS | KIT DE REPARACION | BRIDA | ADAPTADOR DE CARGA |
| POR | PEDIDO | CILINDRO DE GÁS | KIT DE MANUTENÇÃO | FLANGE | ADAPTADOR DE CARGA |

# CD 2400

*Heavy Duty*

AZOL GAS

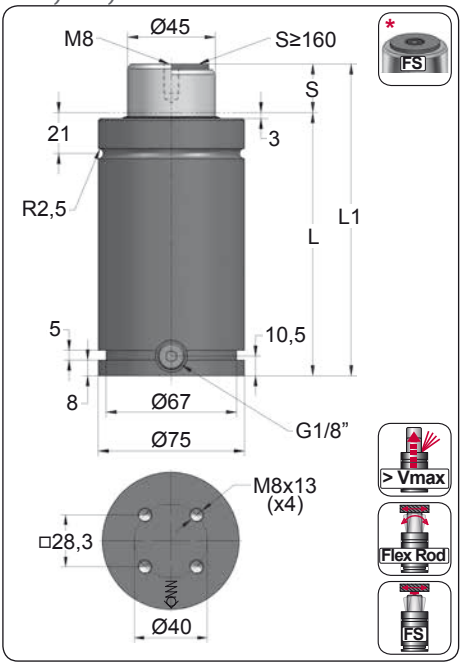


| ORDER | S (mm) | L1 ±0,25 (mm) | L (mm) | Kg. |
|---|---|---|---|---|
| CD 2400 025 | 25 | 160 | 135 | 3.40 |
| CD 2400 038 | 38 | 186 | 148 | 3.69 |
| CD 2400 050 | 50 | 210 | 160 | 3.95 |
| CD 2400 063 | 63.5 | 237 | 173.5 | 4.24 |
| CD 2400 080 | 80 | 270 | 190 | 4.61 |
| CD 2400 100 | 100 | 310 | 210 | 5.12 |
| CD 2400 125 | 125 | 360 | 235 | 5.67 |
| CD 2400 160 * | 160 | 430 | 270 | 6.50 |
| CD 2400 200 * | 200 | 510 | 310 | 7.44 |
| CD 2400 250 * | 250 | 610 | 360 | 8.28 |
| CD 2400 300 * | 300 | 710 | 410 | 9.38 |

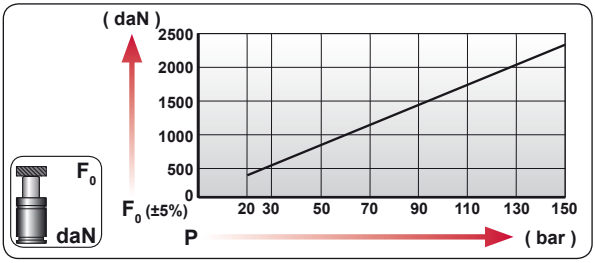


| CODE | bar | psi | F0 daN | F1 daN |
|---|---|---|---|---|
| CD 2400 050 | 150 | 2175 | 2385 | 3565 |
| CD-H 2400 050 | 0 | 0 | --- | --- |

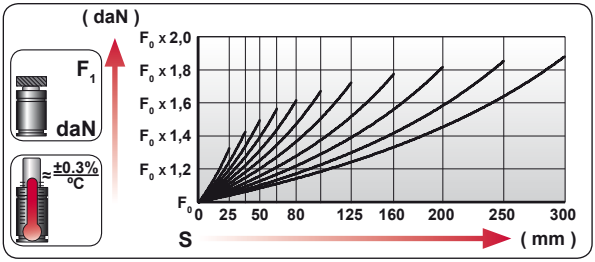


| ENG | ORDER |
|---|---|
| DEU | BESTELLUNG |
| FRA | COMMANDE |
| ITA | ORDINE |
| ESP | PEDIDO |
| POR | PEDIDO |

F0 daN — S mm

CD 2400 50

CD 2400 050

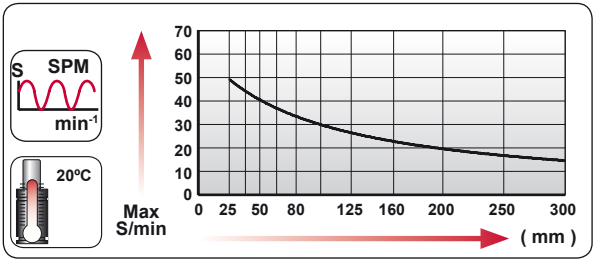


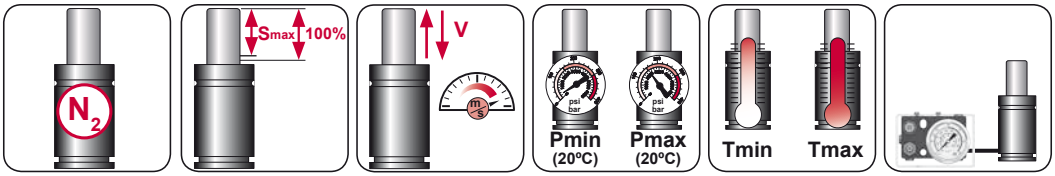


| $N_2$ | Smax < 90% | Vmax 1,6 m/s | bar psi 20 290 | bar psi 150 2175 | ºC ºF 0 32 | ºC ºF 80 176 | 600 CP- |
|---|---|---|---|---|---|---|---|

AZOL GAS

# CD 2400 MOUNTS

*Heavy Duty*

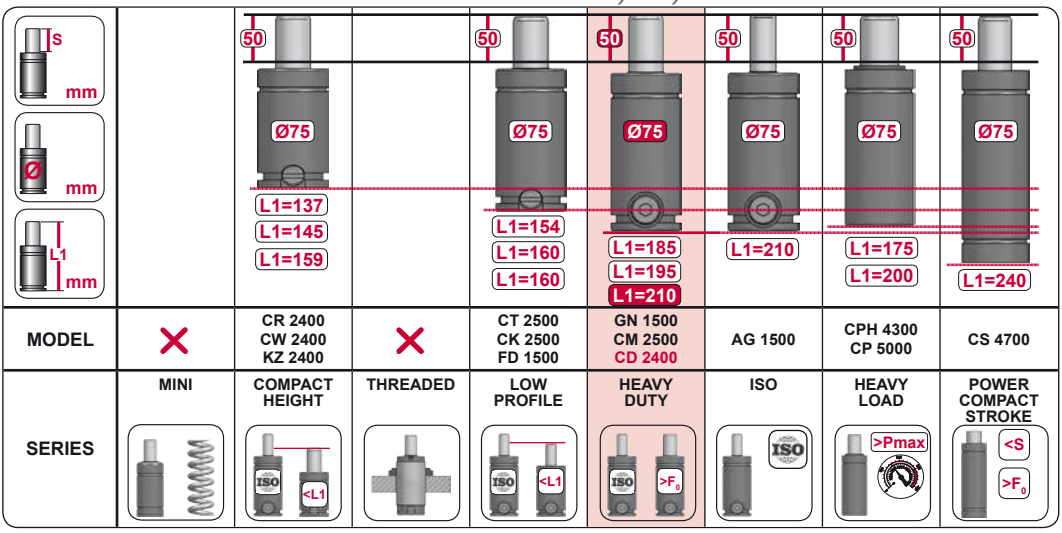


| | | | | | | | | |
|---|---|---|---|---|---|---|---|---|
| **MODEL** | ✕ | CR 2400<br>CW 2400<br>KZ 2400 | ✕ | CT 2500<br>CK 2500<br>FD 1500 | GN 1500<br>CM 2500<br>CD 2400 | AG 1500 | CPH 4300<br>CP 5000 | CS 4700 |
| **SERIES** | MINI | COMPACT HEIGHT | THREADED | LOW PROFILE | HEAVY DUTY | ISO | HEAVY LOAD | POWER COMPACT STROKE |

## A14-075

E24.54.815.G
EM24.54.700/F

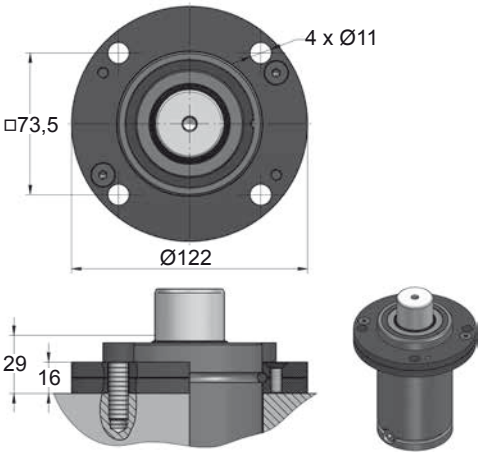


## A34-075

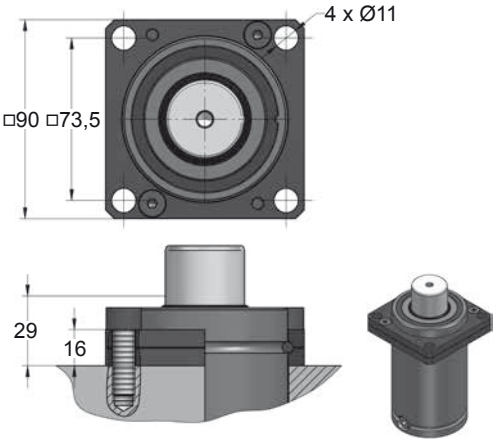





| CODE | | CD 2400 050 | KIT XXXXXXX-S<br>KIT XXXXXXX-C | A14-075 | 18 GA 5 |
|---|---|---|---|---|---|
| ENG | ORDER | GAS SPRING | REPAIR KIT | FLANGE | CHARGING ADAPTER |
| DEU | BESTELLUNG | GASDRUCKFEDER | ERSATZTEILSATZ | FLANSCHE | LADEADAPTER |
| FRA | COMMANDE | RESSORT À GAZ | KIT DE RÉPARATION | BRIDE | RACCORD DE CHARGE |
| ITA | ORDINE | CILINDRO AD AZOTO | KIT DI MANUTENZIONE | FLANGE | ADATTATORE DI CARICO |
| ESP | PEDIDO | RESORTE DE GAS | KIT DE REPARACION | BRIDA | ADAPTADOR DE CARGA |
| POR | PEDIDO | CILINDRO DE GÁS | KIT DE MANUTENÇÃO | FLANGE | ADAPTADOR DE CARGA |

# CD 2400 MOUNTS

*Heavy Duty*

AZOL GAS

## B21-075

EM24.54.700/F

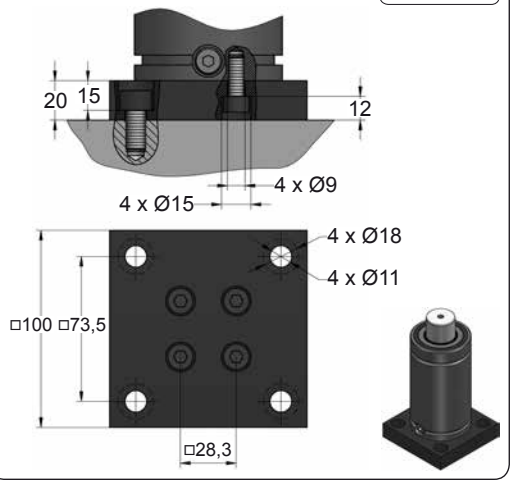


## B76-075

ISO

E24.54.815.G
EM24.54.700/F

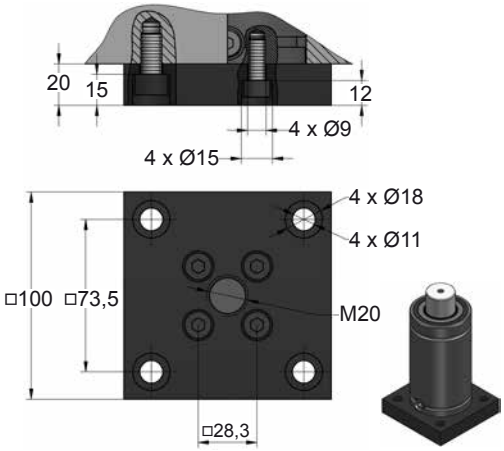


## C05-075

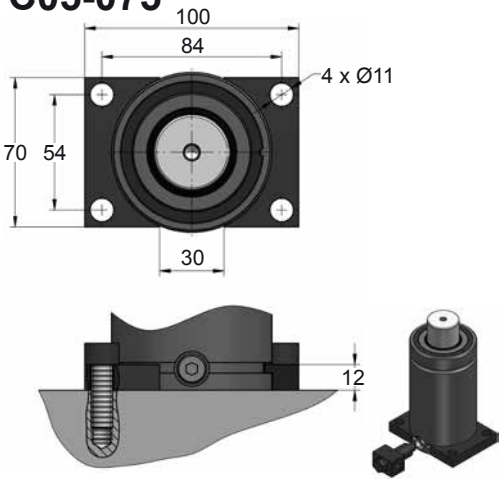


## C20-075

ISO
VDI

E24.54.815.G
EM24.54.700/F

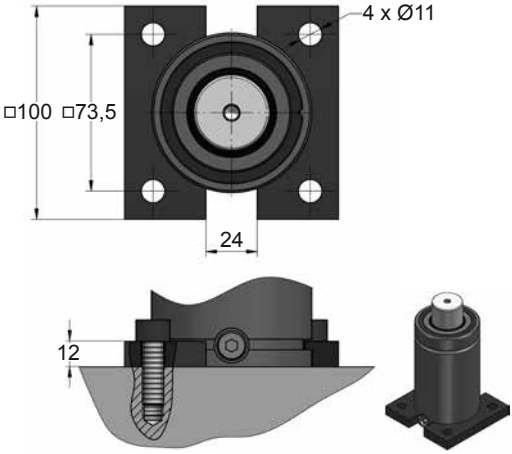




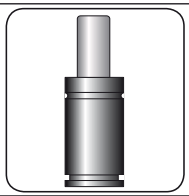




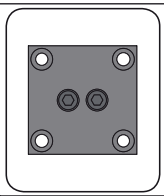

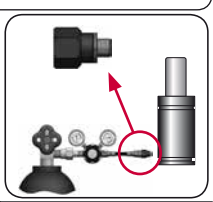

| CODE | | CD 2400 050 | KIT XXXXXXX-S<br>KIT XXXXXXX-C | B21-075 | 18 GA 5 |
|---|---|---|---|---|---|
| ENG | ORDER | GAS SPRING | REPAIR KIT | FLANGE | CHARGING ADAPTER |
| DEU | BESTELLUNG | GASDRUCKFEDER | ERSATZTEILSATZ | FLANSCHE | LADEADAPTER |
| FRA | COMMANDE | RESSORT À GAZ | KIT DE RÉPARATION | BRIDE | RACCORD DE CHARGE |
| ITA | ORDINE | CILINDRO AD AZOTO | KIT DI MANUTENZIONE | FLANGE | ADATTATORE DI CARICO |
| ESP | PEDIDO | RESORTE DE GAS | KIT DE REPARACION | BRIDA | ADAPTADOR DE CARGA |
| POR | PEDIDO | CILINDRO DE GÁS | KIT DE MANUTENÇÃO | FLANGE | ADAPTADOR DE CARGA |

AZOL GAS

# CD 2400 MOUNTS

*Heavy Duty*

## D02-075

ISO E24.54.815.G EM24.54.700/F

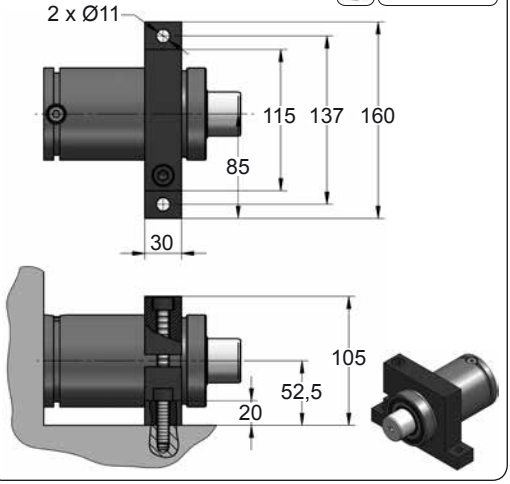


## D67-075

VDI

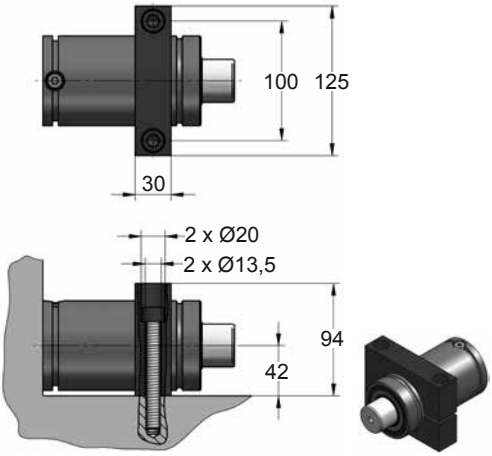









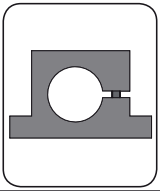

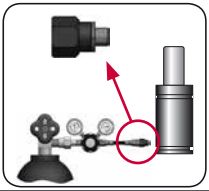

| CODE | | CD 2400 050 | KIT XXXXXXX-S<br>KIT XXXXXXX-C | D02-075 | 18 GA 5 |
|---|---|---|---|---|---|
| ENG | ORDER | GAS SPRING | REPAIR KIT | FLANGE | CHARGING ADAPTER |
| DEU | BESTELLUNG | GASDRUCKFEDER | ERSATZTEILSATZ | FLANSCHE | LADEADAPTER |
| FRA | COMMANDE | RESSORT À GAZ | KIT DE RÉPARATION | BRIDE | RACCORD DE CHARGE |
| ITA | ORDINE | CILINDRO AD AZOTO | KIT DI MANUTENZIONE | FLANGE | ADATTATORE DI CARICO |
| ESP | PEDIDO | RESORTE DE GAS | KIT DE REPARACION | BRIDA | ADAPTADOR DE CARGA |
| POR | PEDIDO | CILINDRO DE GÁS | KIT DE MANUTENÇÃO | FLANGE | ADAPTADOR DE CARGA |

# CD 4200

*Heavy Duty*

AZOL GAS

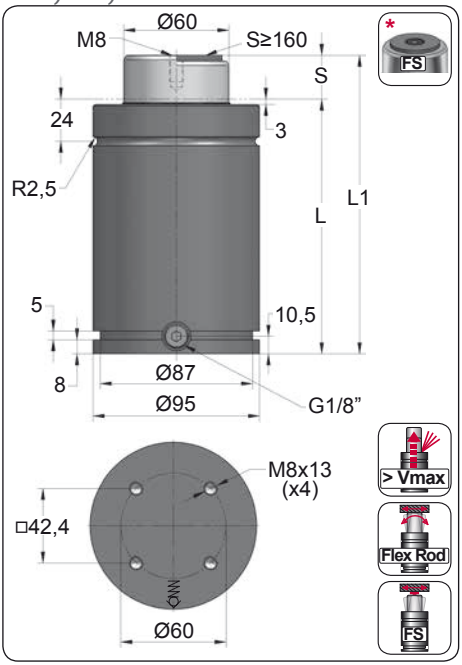


| ORDER | S (mm) | L1 ±0,25 (mm) | L (mm) | Kg. |
|---|---|---|---|---|
| CD 4200 025 | 25 | 170 | 145 | 5.81 |
| CD 4200 038 | 38 | 196 | 158 | 6.26 |
| CD 4200 050 | 50 | 220 | 170 | 6.67 |
| CD 4200 063 | 63.5 | 247 | 183.5 | 7.13 |
| CD 4200 080 | 80 | 280 | 200 | 7.71 |
| CD 4200 100 | 100 | 320 | 220 | 8.40 |
| CD 4200 125 | 125 | 370 | 245 | 9.26 |
| CD 4200 160 * | 160 | 440 | 280 | 10.47 |
| CD 4200 200 * | 200 | 520 | 320 | 11.85 |
| CD 4200 250 * | 250 | 620 | 370 | 13.58 |
| CD 4200 300 * | 300 | 720 | 420 | 15.31 |

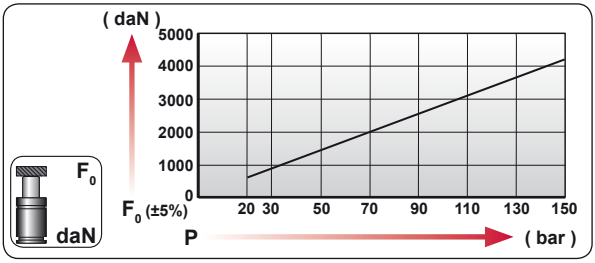


| CODE | bar | psi | F0 daN | F1 daN |
|---|---|---|---|---|
| CD 4200 050 | 150 | 2175 | 4240 | 6210 |
| CD-H 4200 050 | 0 | 0 | --- | --- |

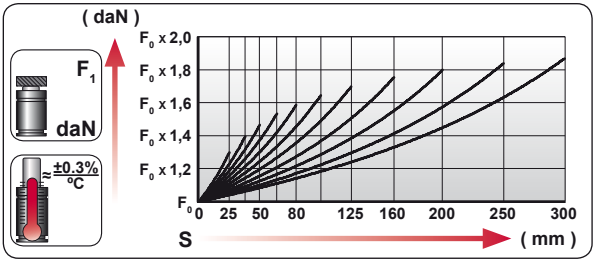


| ENG | ORDER |
|---|---|
| DEU | BESTELLUNG |
| FRA | COMMANDE |
| ITA | ORDINE |
| ESP | PEDIDO |
| POR | PEDIDO |




CD 4200 50

CD 4200 050

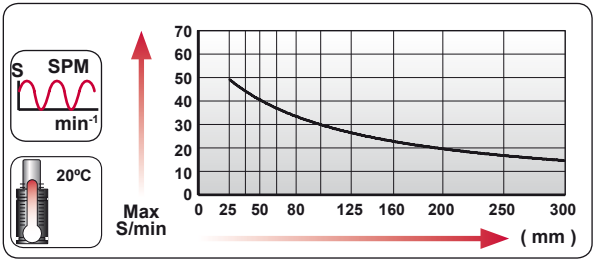


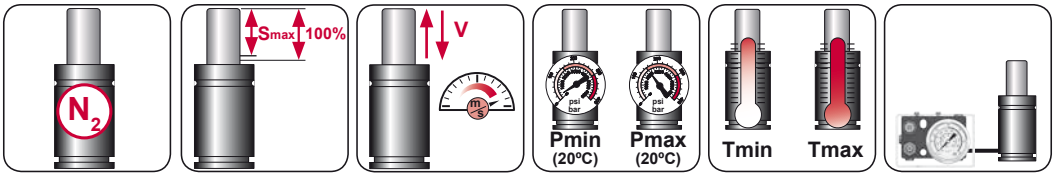


| $N_2$ | Smax < 90% | Vmax 1,6 m/s | bar psi 20 290 | bar psi 150 2175 | ºC ºF 0 32 | ºC ºF 80 176 | 600 CP- |
|---|---|---|---|---|---|---|---|

AZOL GAS

# CD 4200 MOUNTS

*Heavy Duty*

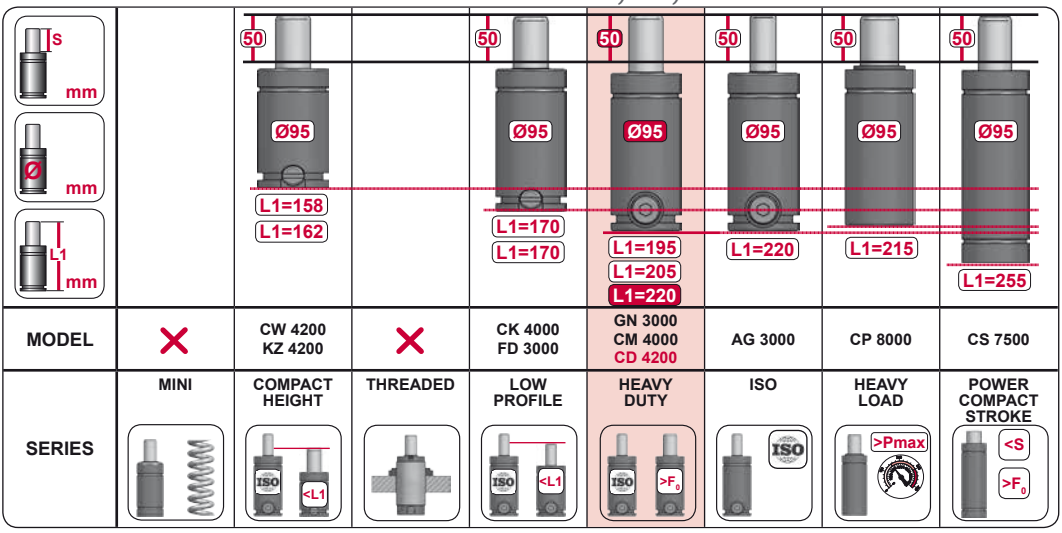


## A14-095

E24.54.815.G
EM24.54.700/F

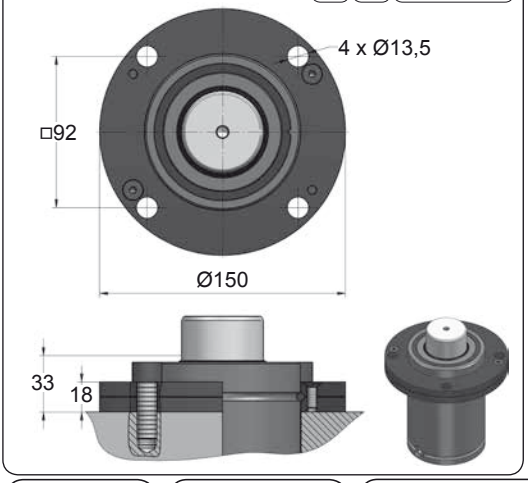


## A34-095

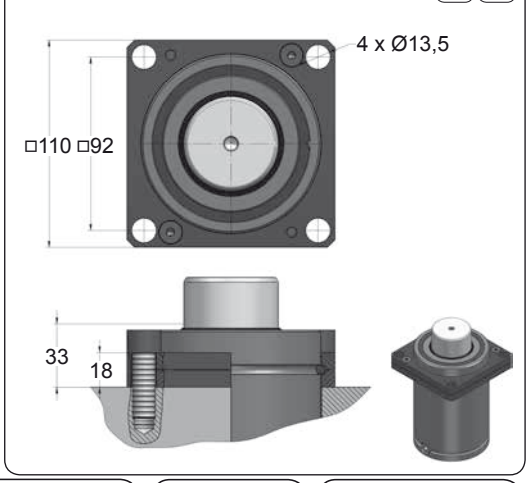





| CODE | | CD 4200 050 | KIT XXXXXXX-S<br>KIT XXXXXXX-C | A14-095 | 18 GA 5 |
|---|---|---|---|---|---|
| ENG | ORDER | GAS SPRING | REPAIR KIT | FLANGE | CHARGING ADAPTER |
| DEU | BESTELLUNG | GASDRUCKFEDER | ERSATZTEILSATZ | FLANSCHE | LADEADAPTER |
| FRA | COMMANDE | RESSORT À GAZ | KIT DE RÉPARATION | BRIDE | RACCORD DE CHARGE |
| ITA | ORDINE | CILINDRO AD AZOTO | KIT DI MANUTENZIONE | FLANGE | ADATTATORE DI CARICO |
| ESP | PEDIDO | RESORTE DE GAS | KIT DE REPARACION | BRIDA | ADAPTADOR DE CARGA |
| POR | PEDIDO | CILINDRO DE GÁS | KIT DE MANUTENÇÃO | FLANGE | ADAPTADOR DE CARGA |

# CD 4200 MOUNTS

*Heavy Duty*

AZOL GAS

## B16-095

E24.54.815.G

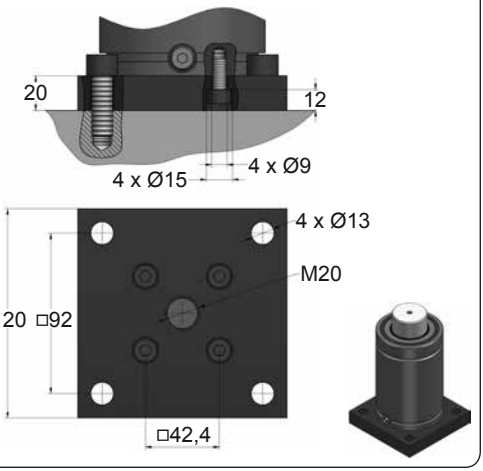


## B21-095

EM24.54.700/F

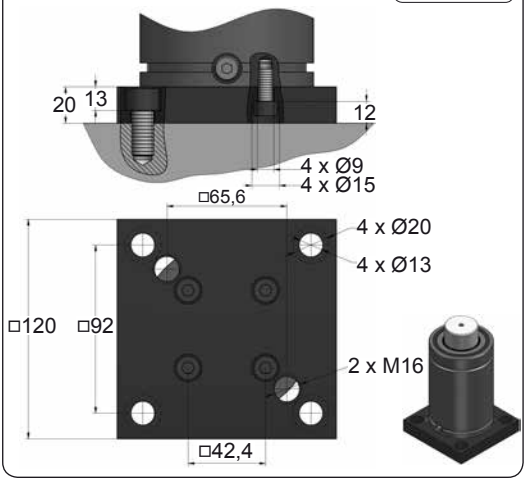


## B76-095

ISO EM24.54.700/F

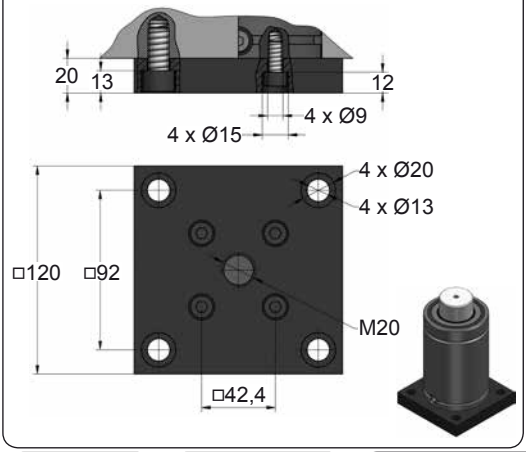









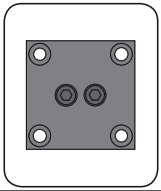

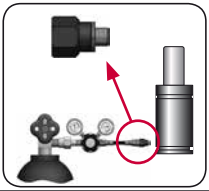

| CODE | | CD 4200 050 | KIT XXXXXXX-S<br>KIT XXXXXXX-C | B16-095 | 18 GA 5 |
|---|---|---|---|---|---|
| ENG | ORDER | GAS SPRING | REPAIR KIT | FLANGE | CHARGING ADAPTER |
| DEU | BESTELLUNG | GASDRUCKFEDER | ERSATZTEILSATZ | FLANSCHE | LADEADAPTER |
| FRA | COMMANDE | RESSORT À GAZ | KIT DE RÉPARATION | BRIDE | RACCORD DE CHARGE |
| ITA | ORDINE | CILINDRO AD AZOTO | KIT DI MANUTENZIONE | FLANGE | ADATTATORE DI CARICO |
| ESP | PEDIDO | RESORTE DE GAS | KIT DE REPARACION | BRIDA | ADAPTADOR DE CARGA |
| POR | PEDIDO | CILINDRO DE GÁS | KIT DE MANUTENÇÃO | FLANGE | ADAPTADOR DE CARGA |

AZOL GAS

# CD 4200 MOUNTS

*Heavy Duty*

## C05-095

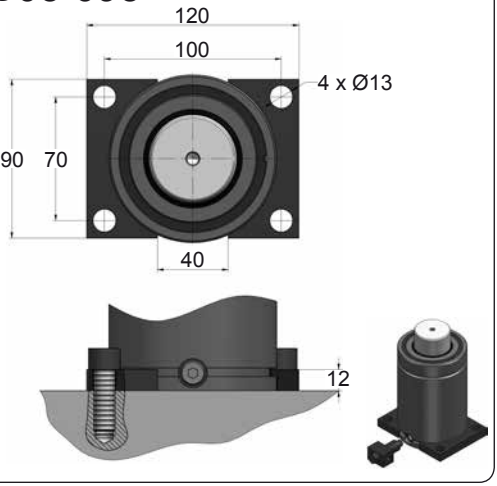


## C20-095

ISO VDI E24.54.815.G EM24.54.700/F

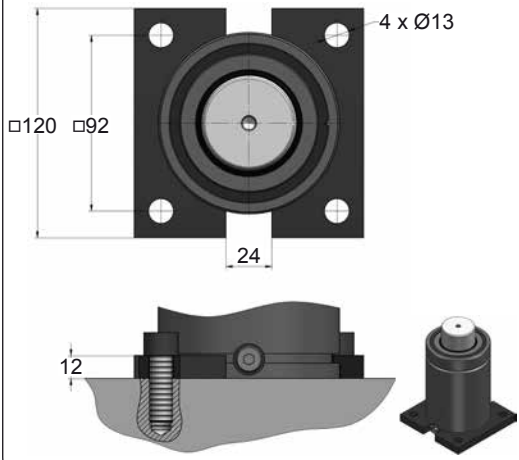


## D02-095

ISO E24.54.815.G EM24.54.700/F

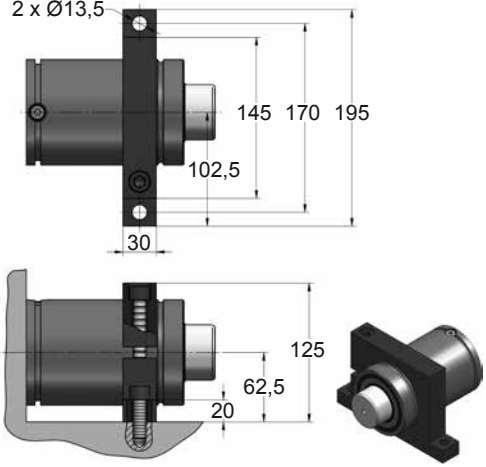


## D67-095

VDI

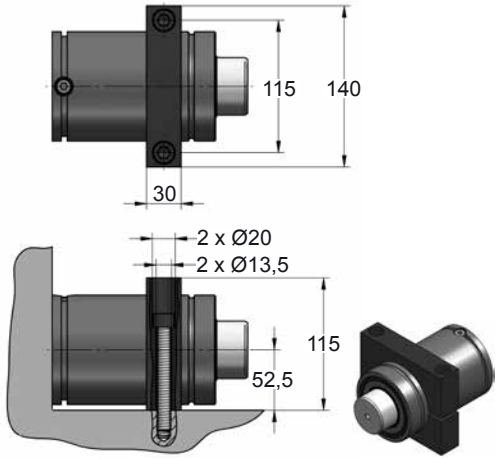









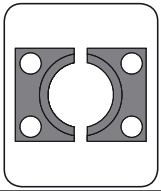

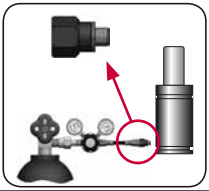

| CODE | | CD 4200 050 | KIT XXXXXXX-S<br>KIT XXXXXXX-C | C05-095 | 18 GA 5 |
|---|---|---|---|---|---|
| ENG | ORDER | GAS SPRING | REPAIR KIT | FLANGE | CHARGING ADAPTER |
| DEU | BESTELLUNG | GASDRUCKFEDER | ERSATZTEILSATZ | FLANSCHE | LADEADAPTER |
| FRA | COMMANDE | RESSORT À GAZ | KIT DE RÉPARATION | BRIDE | RACCORD DE CHARGE |
| ITA | ORDINE | CILINDRO AD AZOTO | KIT DI MANUTENZIONE | FLANGE | ADATTATORE DI CARICO |
| ESP | PEDIDO | RESORTE DE GAS | KIT DE REPARACION | BRIDA | ADAPTADOR DE CARGA |
| POR | PEDIDO | CILINDRO DE GÁS | KIT DE MANUTENÇÃO | FLANGE | ADAPTADOR DE CARGA |

# CD 6600

*Heavy Duty*

AZOL GAS

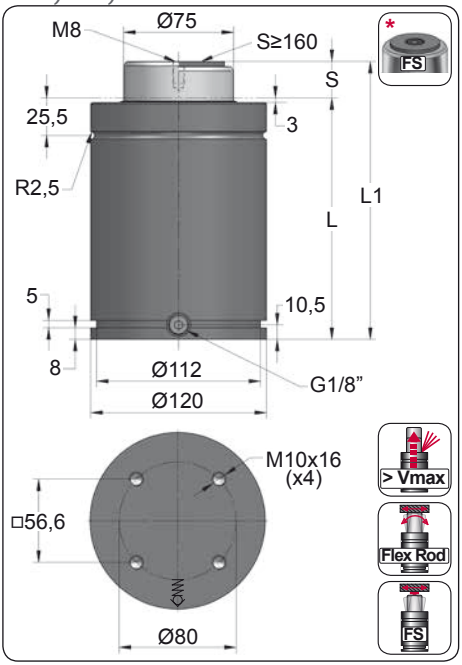


| ORDER | S (mm) | L1 ±0,25 (mm) | L (mm) | Kg. |
|---|---|---|---|---|
| CD 6600 025 | 25 | 190 | 165 | 10.12 |
| CD 6600 038 | 38 | 216 | 178 | 10.83 |
| CD 6600 050 | 50 | 240 | 190 | 11.48 |
| CD 6600 063 | 63.5 | 267 | 203.5 | 12.20 |
| CD 6600 080 | 80 | 300 | 220 | 13.10 |
| CD 6600 100 | 100 | 340 | 240 | 14.19 |
| CD 6600 125 | 125 | 390 | 265 | 15.55 |
| CD 6600 160 * | 160 | 460 | 300 | 17.44 |
| CD 6600 200 * | 200 | 540 | 340 | 19.62 |
| CD 6600 250 * | 250 | 640 | 390 | 22.33 |
| CD 6600 300 * | 300 | 740 | 440 | 25.04 |

APPROVED PED 97/23/CE

VDI

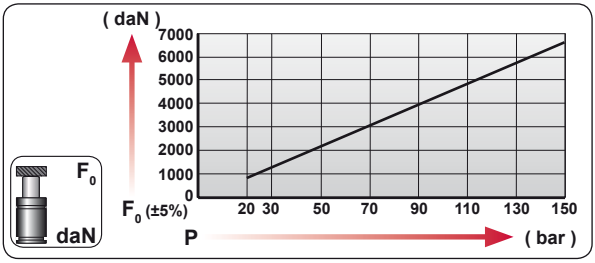


| CODE | bar | psi | $F_0$ daN | $F_1$ daN |
|---|---|---|---|---|
| CD 6600 050 | 150 | 2175 | 6630 | 9060 |
| CD-H 6600 050 | 0 | 0 | --- | --- |

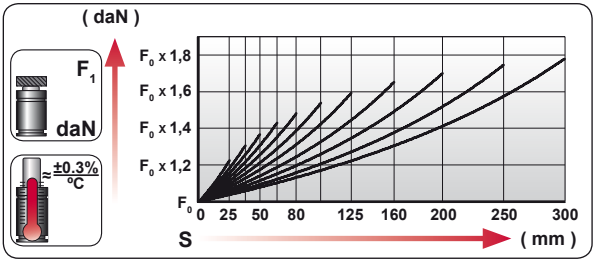


| | |
|---|---|
| ENG | ORDER |
| DEU | BESTELLUNG |
| FRA | COMMANDE |
| ITA | ORDINE |
| ESP | PEDIDO |
| POR | PEDIDO |

$F_0$ daN — S mm

CD 6600 50

CD 6600 050

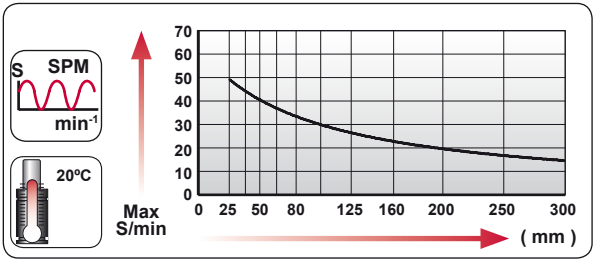


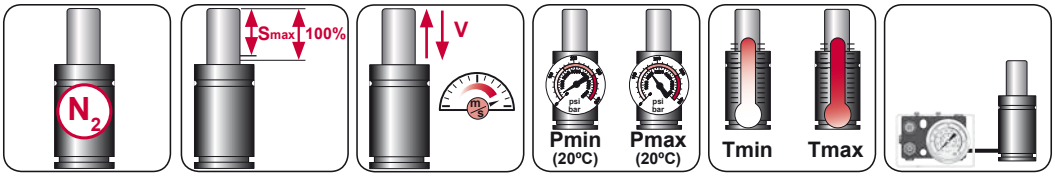


| $N_2$ | Smax < 90% | Vmax 1,6 m/s | bar psi 20 290 | bar psi 150 2175 | ºC ºF 0 32 | ºC ºF 80 176 | 600 CP- |
|---|---|---|---|---|---|---|---|

AZOL GAS

# CD 6600 MOUNTS

*Heavy Duty*

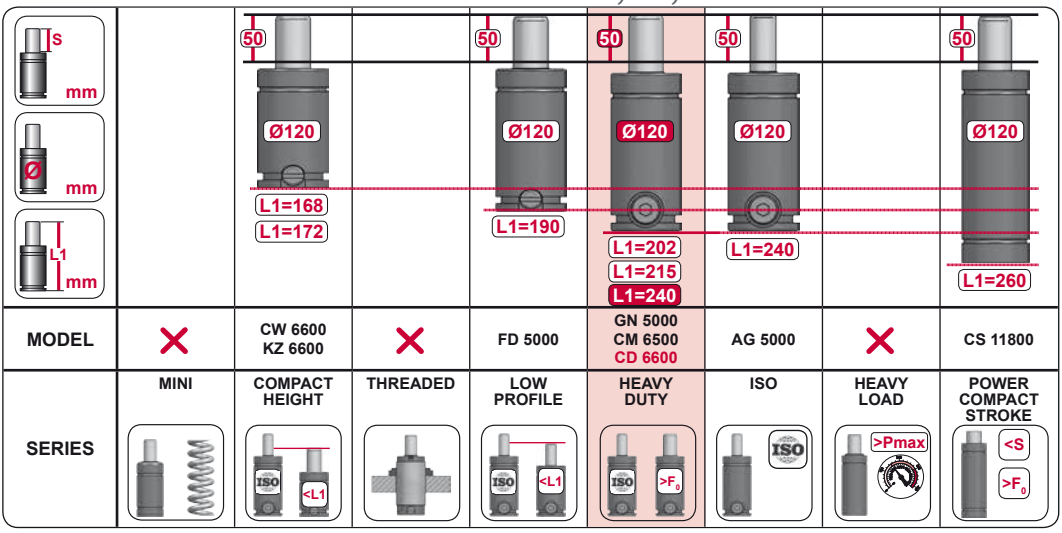


| MODEL | | CW 6600 KZ 6600 | | FD 5000 | GN 5000 CM 6500 CD 6600 | AG 5000 | | CS 11800 |
|---|---|---|---|---|---|---|---|---|
| SERIES | MINI | COMPACT HEIGHT | THREADED | LOW PROFILE | HEAVY DUTY | ISO | HEAVY LOAD | POWER COMPACT STROKE |

## A14-120

ISO E24.54.815.G EM24.54.700/F

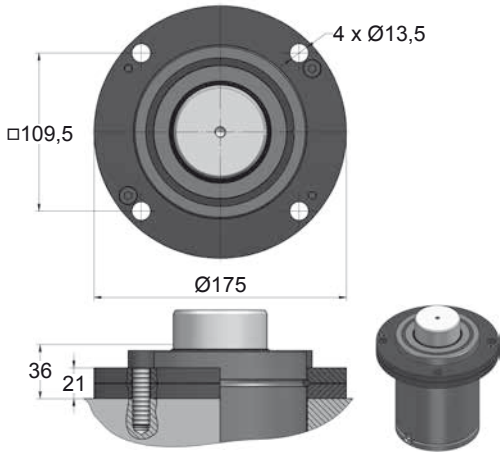


## A34-120

ISO VDI

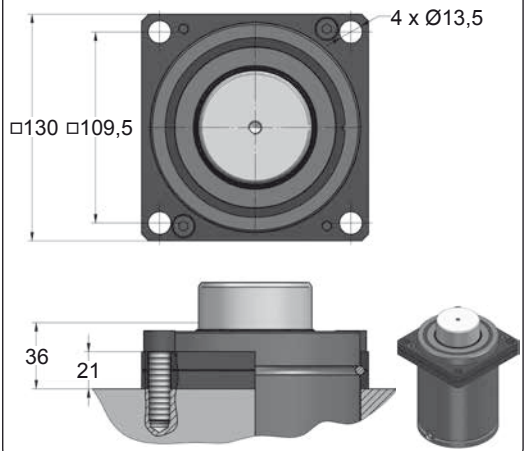





| CODE | | CD 6600 050 | KIT XXXXXXX-S KIT XXXXXXX-C | A14-120 | 18 GA 5 |
|---|---|---|---|---|---|
| ENG | ORDER | GAS SPRING | REPAIR KIT | FLANGE | CHARGING ADAPTER |
| DEU | BESTELLUNG | GASDRUCKFEDER | ERSATZTEILSATZ | FLANSCHE | LADEADAPTER |
| FRA | COMMANDE | RESSORT À GAZ | KIT DE RÉPARATION | BRIDE | RACCORD DE CHARGE |
| ITA | ORDINE | CILINDRO AD AZOTO | KIT DI MANUTENZIONE | FLANGE | ADATTATORE DI CARICO |
| ESP | PEDIDO | RESORTE DE GAS | KIT DE REPARACION | BRIDA | ADAPTADOR DE CARGA |
| POR | PEDIDO | CILINDRO DE GÁS | KIT DE MANUTENÇÃO | FLANGE | ADAPTADOR DE CARGA |

# CD 6600 MOUNTS

*Heavy Duty*

AZOL GAS

## B16-120

E24.54.815.G

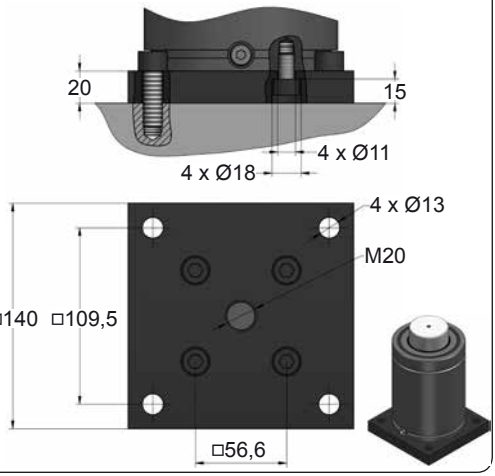


## B21-120

EM24.54.700/F

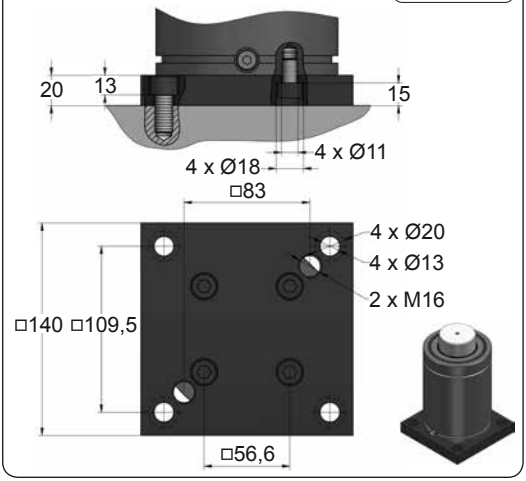


## B76-120

EM24.54.700/F

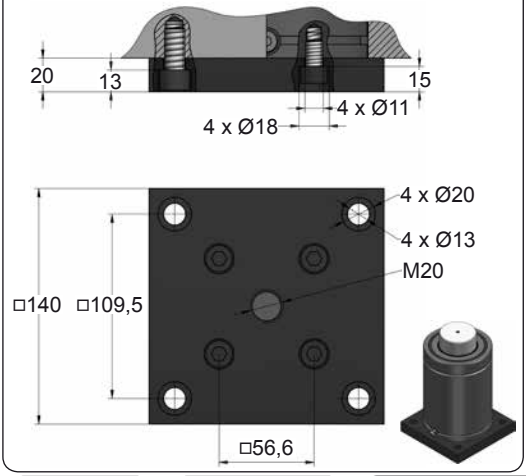









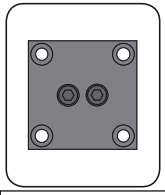

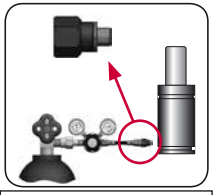

| CODE | | CD 6600 050 | KIT XXXXXXX-S<br>KIT XXXXXXX-C | B16-120 | 18 GA 5 |
|---|---|---|---|---|---|
| ENG | ORDER | GAS SPRING | REPAIR KIT | FLANGE | CHARGING ADAPTER |
| DEU | BESTELLUNG | GASDRUCKFEDER | ERSATZTEILSATZ | FLANSCHE | LADEADAPTER |
| FRA | COMMANDE | RESSORT À GAZ | KIT DE RÉPARATION | BRIDE | RACCORD DE CHARGE |
| ITA | ORDINE | CILINDRO AD AZOTO | KIT DI MANUTENZIONE | FLANGE | ADATTATORE DI CARICO |
| ESP | PEDIDO | RESORTE DE GAS | KIT DE REPARACION | BRIDA | ADAPTADOR DE CARGA |
| POR | PEDIDO | CILINDRO DE GÁS | KIT DE MANUTENÇÃO | FLANGE | ADAPTADOR DE CARGA |

AZOL GAS

# CD 6600 MOUNTS

*Heavy Duty*

## C05-120

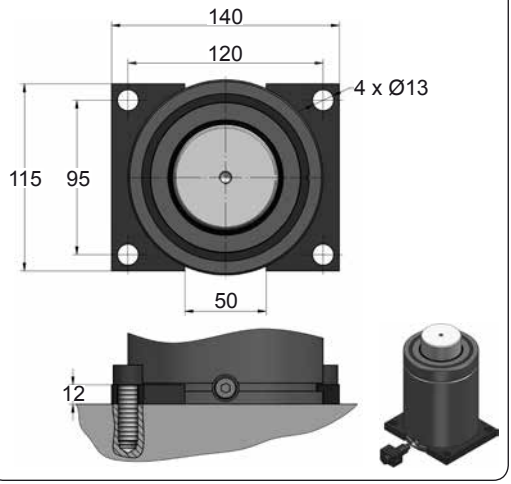


## C20-120

ISO VDI E24.54.815.G EM24.54.700/F

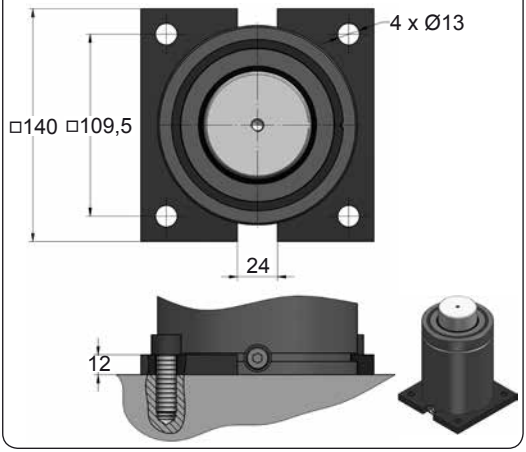


## D02-120

ISO E24.54.815.G EM24.54.700/F

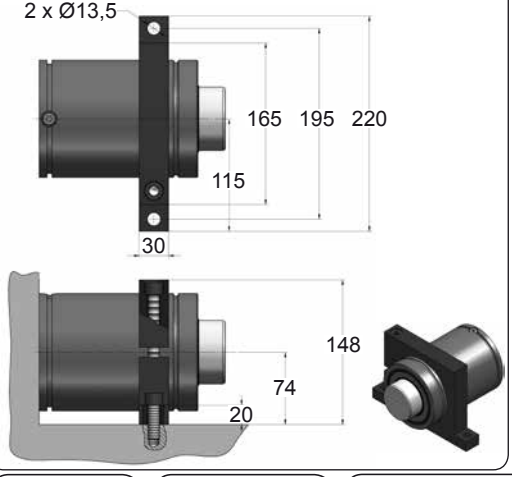


## D67-120

VDI

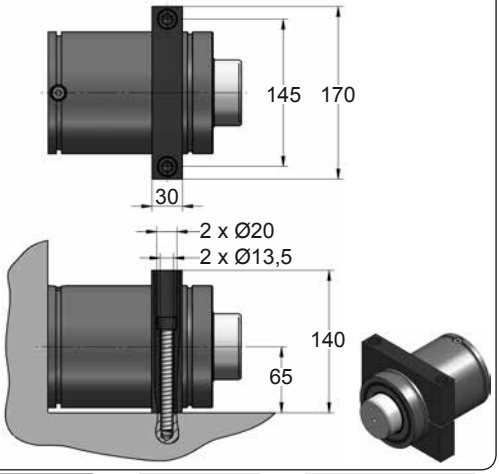









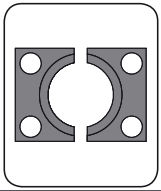

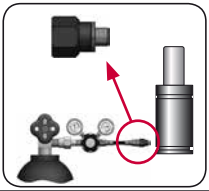

| CODE | | CD 6600 050 | KIT XXXXXXX-S<br>KIT XXXXXXX-C | C05-120 | 18 GA 5 |
|---|---|---|---|---|---|
| ENG | ORDER | GAS SPRING | REPAIR KIT | FLANGE | CHARGING ADAPTER |
| DEU | BESTELLUNG | GASDRUCKFEDER | ERSATZTEILSATZ | FLANSCHE | LADEADAPTER |
| FRA | COMMANDE | RESSORT À GAZ | KIT DE RÉPARATION | BRIDE | RACCORD DE CHARGE |
| ITA | ORDINE | CILINDRO AD AZOTO | KIT DI MANUTENZIONE | FLANGE | ADATTATORE DI CARICO |
| ESP | PEDIDO | RESORTE DE GAS | KIT DE REPARACION | BRIDA | ADAPTADOR DE CARGA |
| POR | PEDIDO | CILINDRO DE GÁS | KIT DE MANUTENÇÃO | FLANGE | ADAPTADOR DE CARGA |

# CD 9600

*Heavy Duty*

AZOL GAS

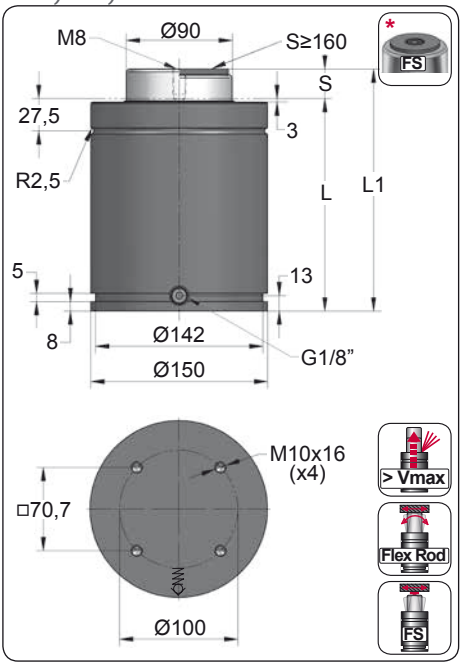


| ORDER | S (mm) | L1 ±0,25 (mm) | L (mm) | Kg. |
|---|---|---|---|---|
| CD 9600 025 | 25 | 205 | 180 | 19.32 |
| CD 9600 038 | 38 | 231 | 193 | 20.39 |
| CD 9600 050 | 50 | 255 | 205 | 21.38 |
| CD 9600 063 | 63.5 | 282 | 218.5 | 22.47 |
| CD 9600 080 | 80 | 315 | 235 | 23.86 |
| CD 9600 100 | 100 | 355 | 255 | 25.50 |
| CD 9600 125 | 125 | 405 | 280 | 27.57 |
| CD 9600 160 * | 160 | 475 | 315 | 30.45 |
| CD 9600 200 * | 200 | 555 | 355 | 33.75 |
| CD 9600 250 * | 250 | 655 | 405 | 37.87 |
| CD 9600 300 * | 300 | 755 | 455 | 42.00 |

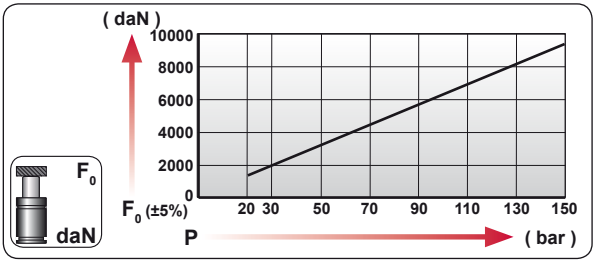


| CODE | bar | psi | F0 daN | F1 daN |
|---|---|---|---|---|
| CD 9600 050 | 150 | 2175 | 9540 | 13150 |
| CD-H 9600 050 | 0 | 0 | --- | --- |

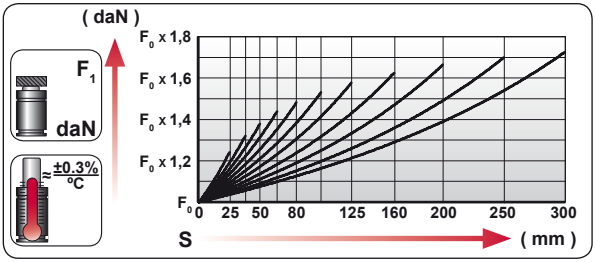


| ENG | ORDER |
|---|---|
| DEU | BESTELLUNG |
| FRA | COMMANDE |
| ITA | ORDINE |
| ESP | PEDIDO |
| POR | PEDIDO |




CD 9600 50

CD 9600 050

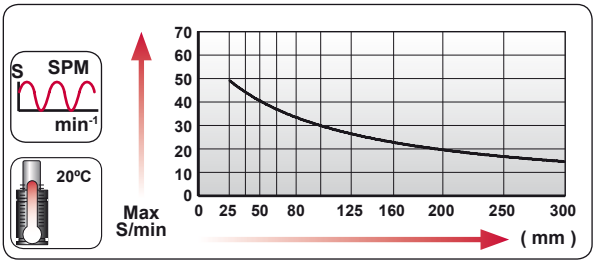


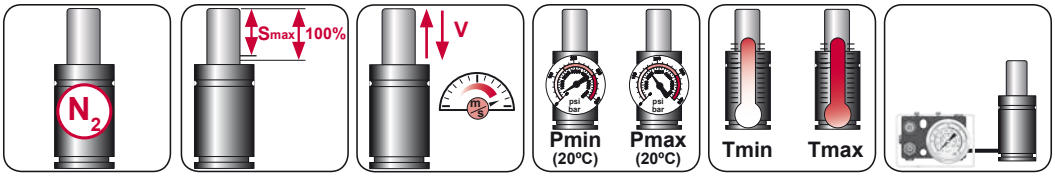


| $N_2$ | Smax < 90% | Vmax 1,6 m/s | bar psi 20 290 | bar psi 150 2175 | °C °F 0 32 | °C °F 80 176 | 600 CP- |
|---|---|---|---|---|---|---|---|

AZOL GAS

# CD 9600 MOUNTS

*Heavy Duty*

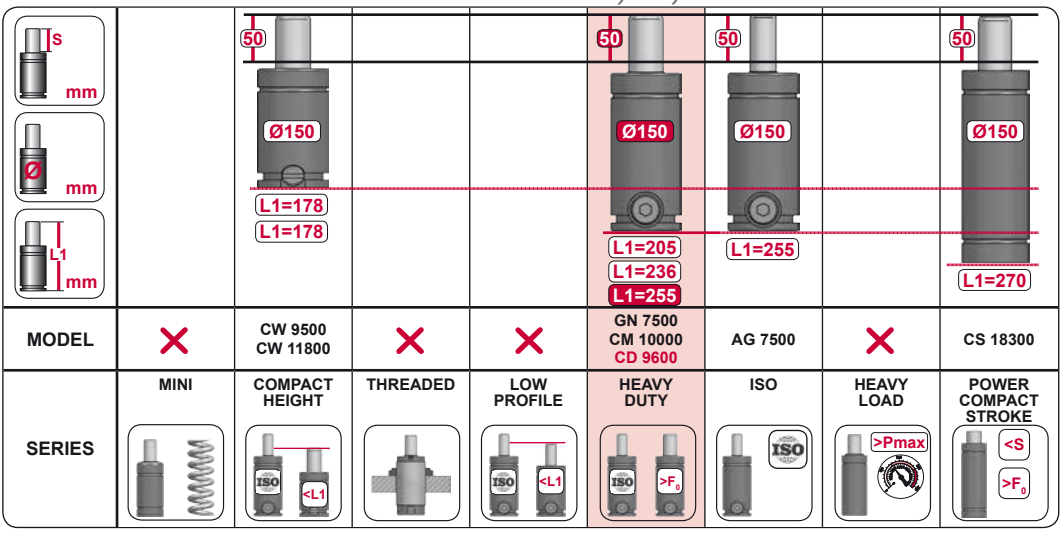


| MODEL | × | CW 9500 CW 11800 | × | × | GN 7500 CM 10000 CD 9600 | AG 7500 | × | CS 18300 |
|---|---|---|---|---|---|---|---|---|
| SERIES | MINI | COMPACT HEIGHT | THREADED | LOW PROFILE | HEAVY DUTY | ISO | HEAVY LOAD | POWER COMPACT STROKE |

## A14-150

ISO E24.54.815.G EM24.54.700/F

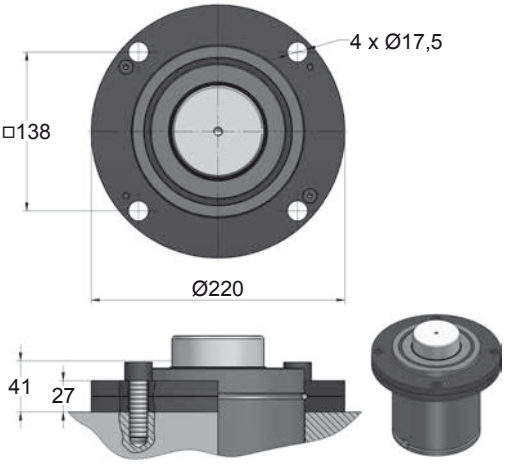


## A34-150

ISO VDI

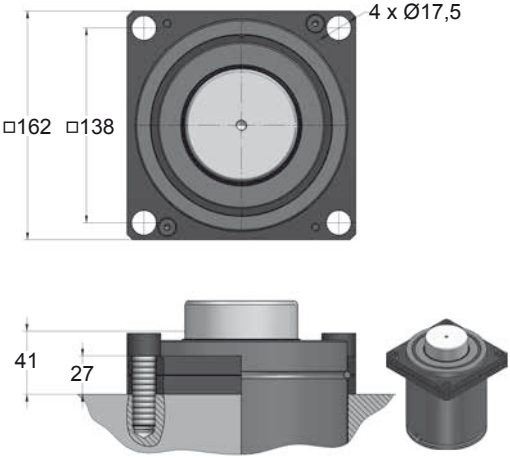





| CODE | | CD 9600 050 | KIT XXXXXXX-S KIT XXXXXXX-C | A14-150 | 18 GA 5 |
|---|---|---|---|---|---|
| ENG | ORDER | GAS SPRING | REPAIR KIT | FLANGE | CHARGING ADAPTER |
| DEU | BESTELLUNG | GASDRUCKFEDER | ERSATZTEILSATZ | FLANSCHE | LADEADAPTER |
| FRA | COMMANDE | RESSORT À GAZ | KIT DE RÉPARATION | BRIDE | RACCORD DE CHARGE |
| ITA | ORDINE | CILINDRO AD AZOTO | KIT DI MANUTENZIONE | FLANGE | ADATTATORE DI CARICO |
| ESP | PEDIDO | RESORTE DE GAS | KIT DE REPARACION | BRIDA | ADAPTADOR DE CARGA |
| POR | PEDIDO | CILINDRO DE GÁS | KIT DE MANUTENÇÃO | FLANGE | ADAPTADOR DE CARGA |

# CD 9600 MOUNTS

*Heavy Duty*

AZOL GAS

## B16-150

E24.54.815.G

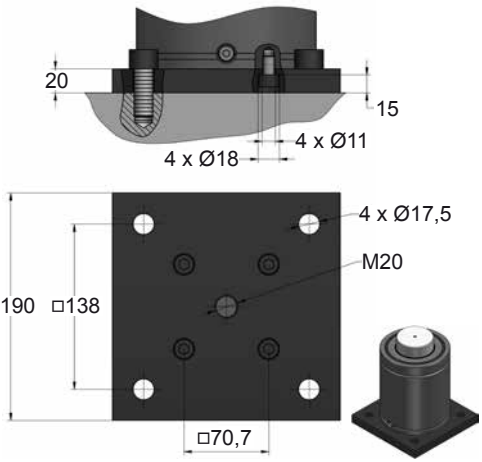


## B21-150

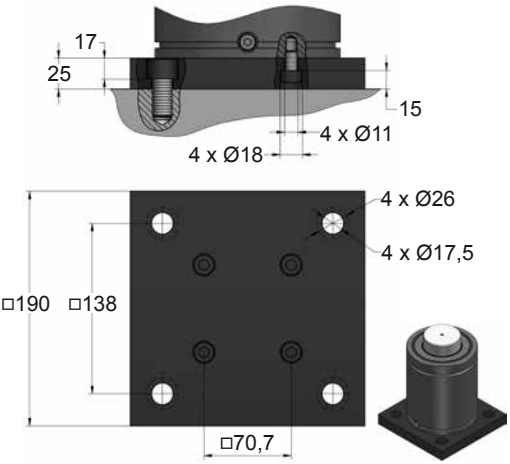


## B76-150

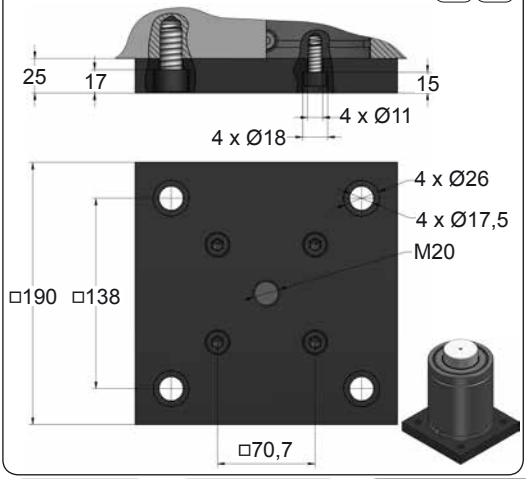









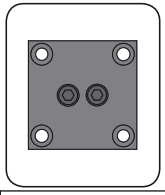

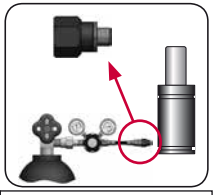

| CODE | | CD 9600 050 | KIT XXXXXXX-S<br>KIT XXXXXXX-C | B16-150 | 18 GA 5 |
|---|---|---|---|---|---|
| ENG | ORDER | GAS SPRING | REPAIR KIT | FLANGE | CHARGING ADAPTER |
| DEU | BESTELLUNG | GASDRUCKFEDER | ERSATZTEILSATZ | FLANSCHE | LADEADAPTER |
| FRA | COMMANDE | RESSORT À GAZ | KIT DE RÉPARATION | BRIDE | RACCORD DE CHARGE |
| ITA | ORDINE | CILINDRO AD AZOTO | KIT DI MANUTENZIONE | FLANGE | ADATTATORE DI CARICO |
| ESP | PEDIDO | RESORTE DE GAS | KIT DE REPARACION | BRIDA | ADAPTADOR DE CARGA |
| POR | PEDIDO | CILINDRO DE GÁS | KIT DE MANUTENÇÃO | FLANGE | ADAPTADOR DE CARGA |

AZOL GAS

# CD 9600 MOUNTS

*Heavy Duty*

## C05-150

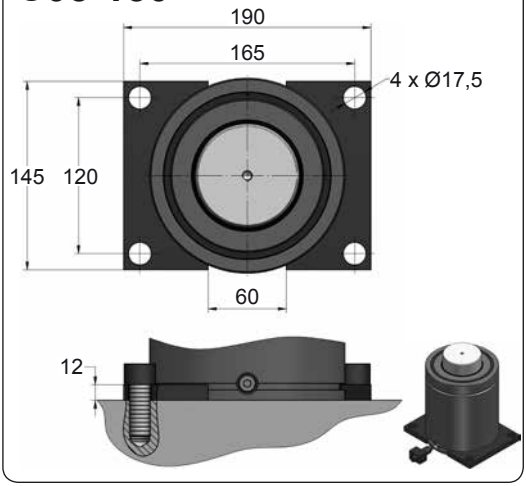


## C20-150

ISO VDI E24.54.815.G EM24.54.700/F

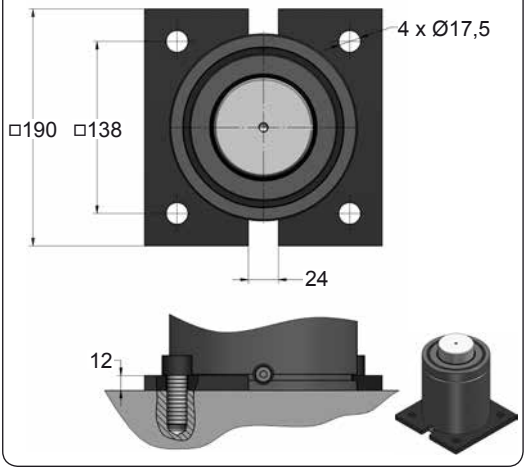


## D02-150

ISO E24.54.815.G

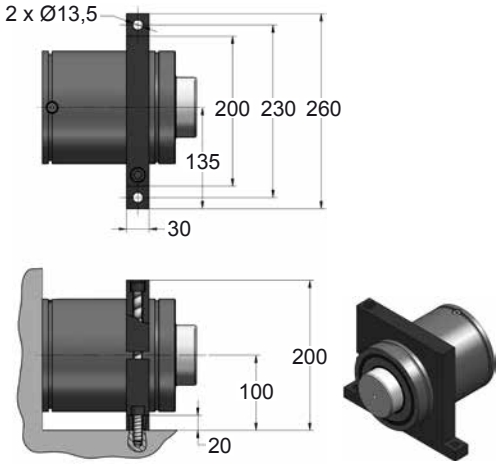


## D67-150

VDI

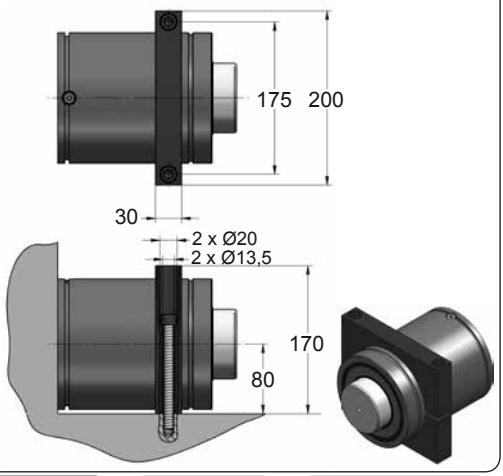









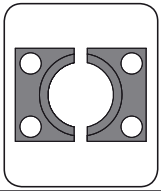

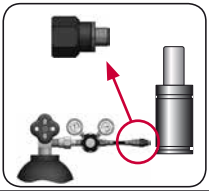

| CODE | | CD 9600 050 | KIT XXXXXXX-S<br>KIT XXXXXXX-C | C05-150 | 18 GA 5 |
|---|---|---|---|---|---|
| ENG | ORDER | GAS SPRING | REPAIR KIT | FLANGE | CHARGING ADAPTER |
| DEU | BESTELLUNG | GASDRUCKFEDER | ERSATZTEILSATZ | FLANSCHE | LADEADAPTER |
| FRA | COMMANDE | RESSORT À GAZ | KIT DE RÉPARATION | BRIDE | RACCORD DE CHARGE |
| ITA | ORDINE | CILINDRO AD AZOTO | KIT DI MANUTENZIONE | FLANGE | ADATTATORE DI CARICO |
| ESP | PEDIDO | RESORTE DE GAS | KIT DE REPARACION | BRIDA | ADAPTADOR DE CARGA |
| POR | PEDIDO | CILINDRO DE GÁS | KIT DE MANUTENÇÃO | FLANGE | ADAPTADOR DE CARGA |

# CD 18500

*Heavy Duty*

AZOL GAS

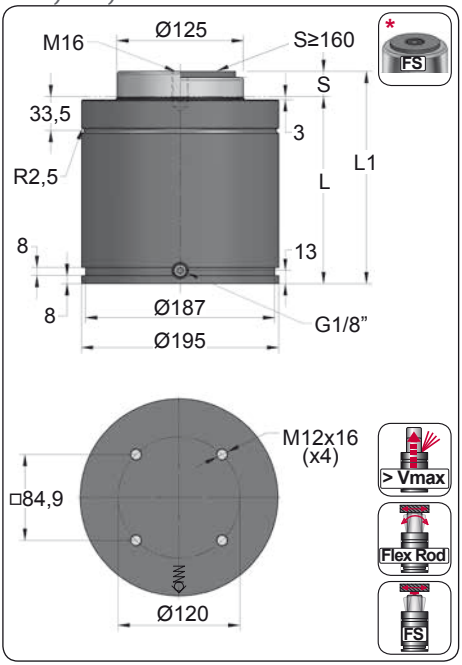


| ORDER | S (mm) | L1 ±0,25 (mm) | L (mm) | Kg. |
|---|---|---|---|---|
| CD 18500 025 | 25 | 210 | 185 | 32.54 |
| CD 18500 038 | 38 | 236 | 198 | 34.06 |
| CD 18500 050 | 50 | 260 | 210 | 35.46 |
| CD 18500 063 | 63.5 | 287 | 223.5 | 37.01 |
| CD 18500 080 | 80 | 320 | 240 | 38.96 |
| CD 18500 100 | 100 | 360 | 260 | 41.29 |
| CD 18500 125 | 125 | 410 | 285 | 44.21 |
| CD 18500 160 * | 160 | 480 | 320 | 48.29 |
| CD 18500 200 * | 200 | 560 | 360 | 52.96 |
| CD 18500 250 * | 250 | 660 | 410 | 58.79 |
| CD 18500 300 * | 300 | 760 | 460 | 64.63 |

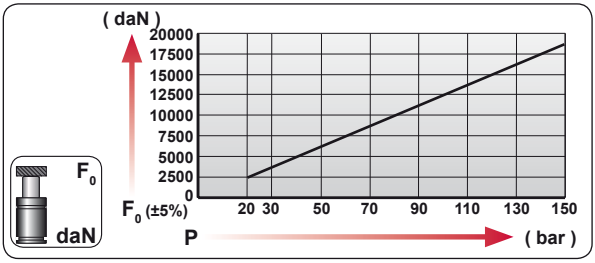


| CODE | bar | psi | $F_0$ daN | $F_1$ daN |
|---|---|---|---|---|
| CD 18500 050 | 150 | 2175 | 18410 | 28015 |
| CD-H 18500 050 | 0 | 0 | --- | --- |

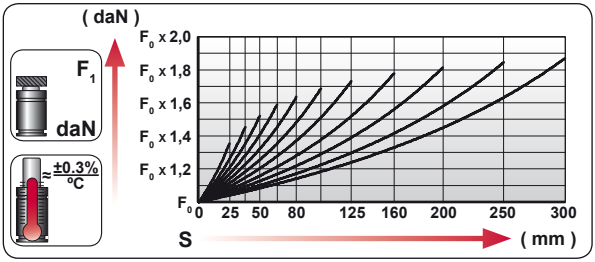


| ENG | ORDER |
|---|---|
| DEU | BESTELLUNG |
| FRA | COMMANDE |
| ITA | ORDINE |
| ESP | PEDIDO |
| POR | PEDIDO |

$F_0$ daN — S mm

CD 18500 50

CD 18500 050

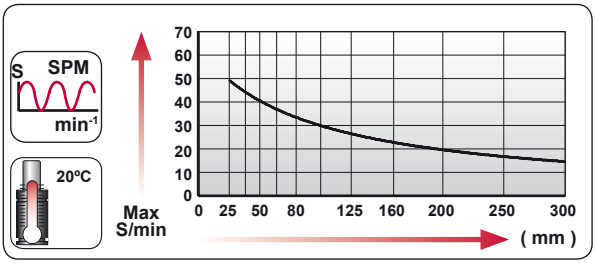


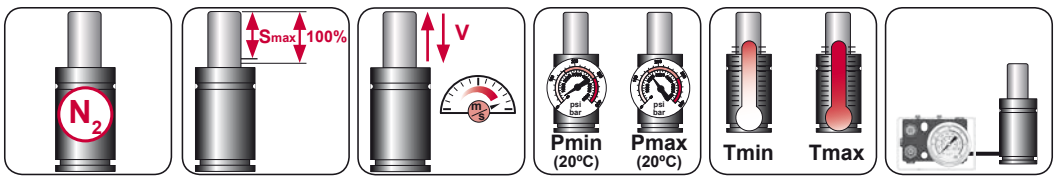


| $N_2$ | Smax < 90% | Vmax 1,6 m/s | bar psi 20 290 | bar psi 150 2175 | °C °F 0 32 | °C °F 80 176 | 600 CP- |
|---|---|---|---|---|---|---|---|

AZOL GAS

# CD 18500 MOUNTS

*Heavy Duty*

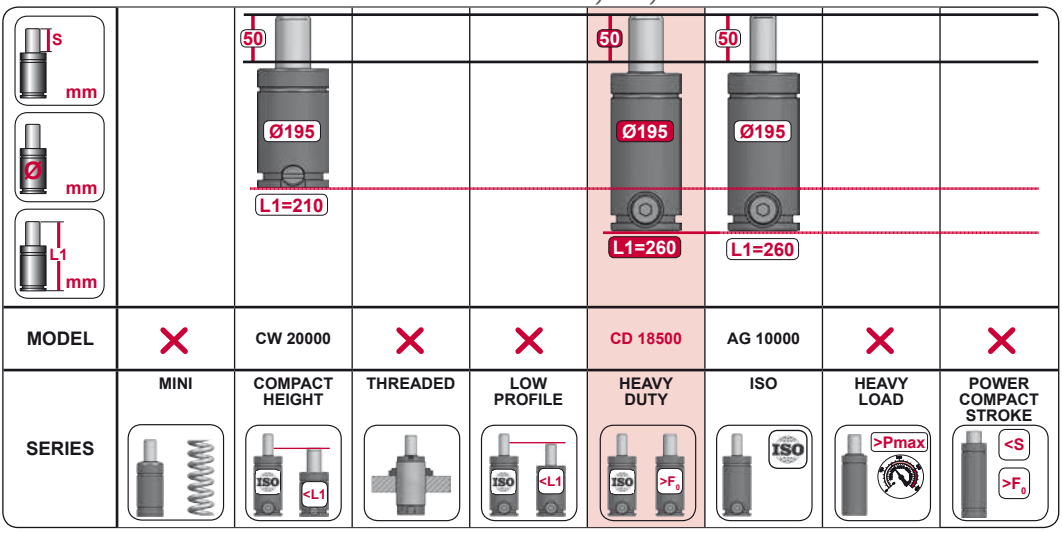


| MODEL | ✕ | CW 20000 | ✕ | ✕ | CD 18500 | AG 10000 | ✕ | ✕ |
|---|---|---|---|---|---|---|---|---|
| SERIES | MINI | COMPACT HEIGHT | THREADED | LOW PROFILE | HEAVY DUTY | ISO | HEAVY LOAD | POWER COMPACT STROKE |

## A14-195

ISO · EM24.54.700/F

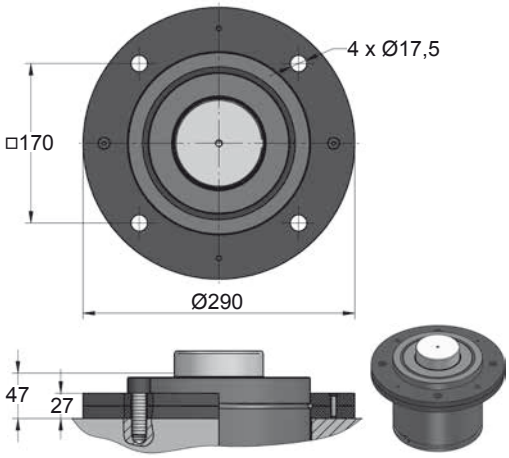


## A34-195

ISO · VDI

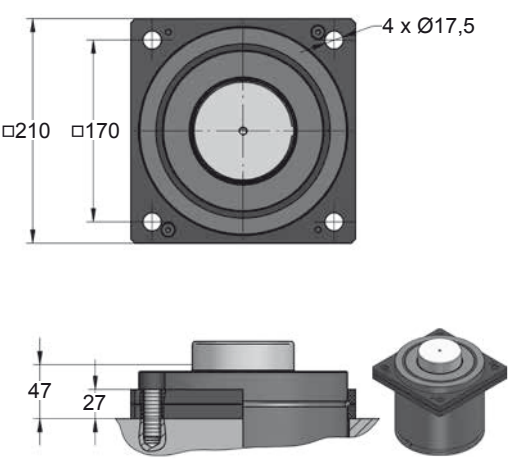









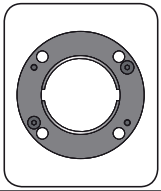

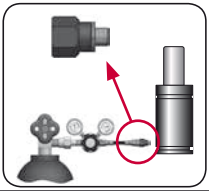

| CODE | | CD 18500 050 | KIT XXXXXXX-S<br>KIT XXXXXXX-C | A14-195 | 18 GA 5 |
|---|---|---|---|---|---|
| ENG | ORDER | GAS SPRING | REPAIR KIT | FLANGE | CHARGING ADAPTER |
| DEU | BESTELLUNG | GASDRUCKFEDER | ERSATZTEILSATZ | FLANSCHE | LADEADAPTER |
| FRA | COMMANDE | RESSORT À GAZ | KIT DE RÉPARATION | BRIDE | RACCORD DE CHARGE |
| ITA | ORDINE | CILINDRO AD AZOTO | KIT DI MANUTENZIONE | FLANGE | ADATTATORE DI CARICO |
| ESP | PEDIDO | RESORTE DE GAS | KIT DE REPARACION | BRIDA | ADAPTADOR DE CARGA |
| POR | PEDIDO | CILINDRO DE GÁS | KIT DE MANUTENÇÃO | FLANGE | ADAPTADOR DE CARGA |

# CD 18500 MOUNTS

*Heavy Duty*

AZOL GAS

## B21-195

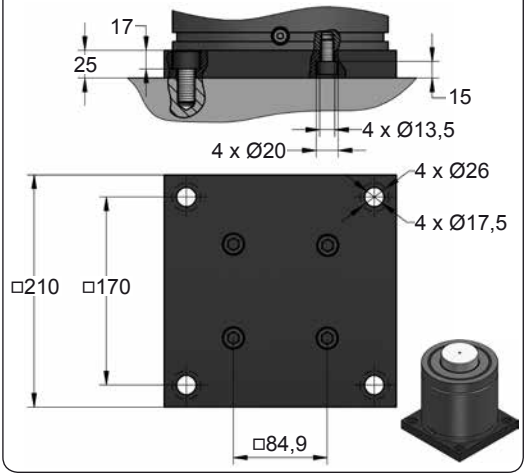


## B76-195

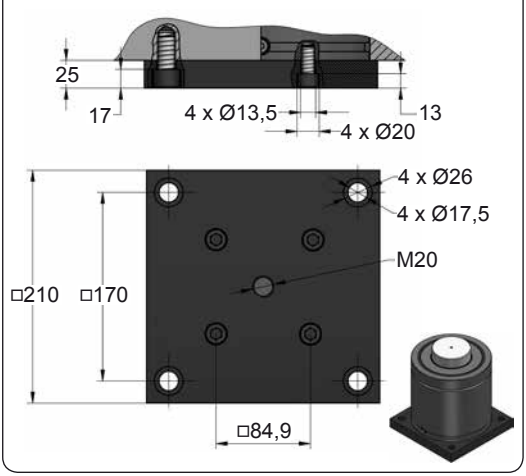


## C05-195

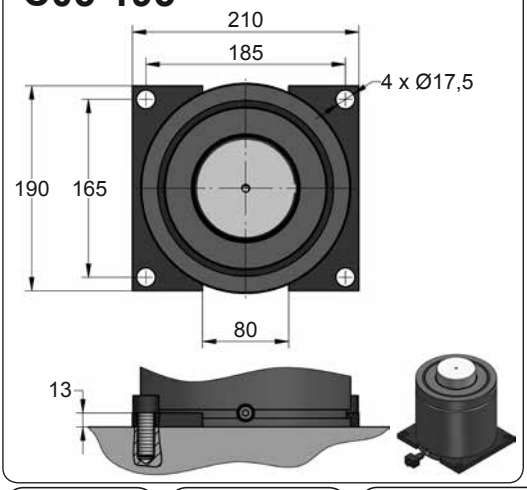


## C20-195

EM24.54.700/F

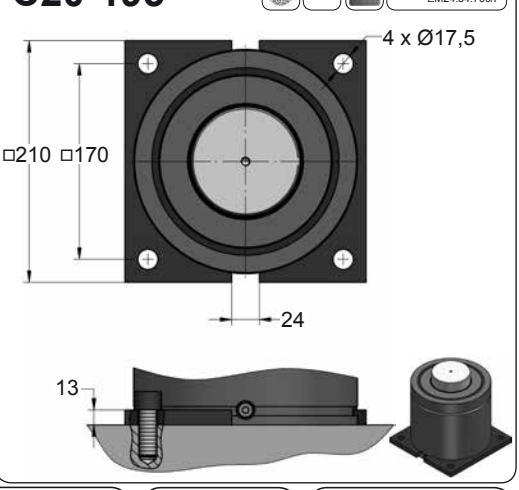









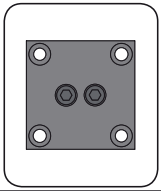

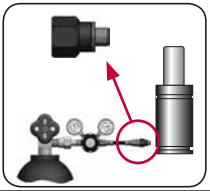

| CODE | | CD 18500 050 | KIT XXXXXXX-S<br>KIT XXXXXXX-C | B21-195 | 18 GA 5 |
|---|---|---|---|---|---|
| ENG | ORDER | GAS SPRING | REPAIR KIT | FLANGE | CHARGING ADAPTER |
| DEU | BESTELLUNG | GASDRUCKFEDER | ERSATZTEILSATZ | FLANSCHE | LADEADAPTER |
| FRA | COMMANDE | RESSORT À GAZ | KIT DE RÉPARATION | BRIDE | RACCORD DE CHARGE |
| ITA | ORDINE | CILINDRO AD AZOTO | KIT DI MANUTENZIONE | FLANGE | ADATTATORE DI CARICO |
| ESP | PEDIDO | RESORTE DE GAS | KIT DE REPARACION | BRIDA | ADAPTADOR DE CARGA |
| POR | PEDIDO | CILINDRO DE GÁS | KIT DE MANUTENÇÃO | FLANGE | ADAPTADOR DE CARGA |

AZOL GAS

# CD 18500 MOUNTS

*Heavy Duty*

## D02-195

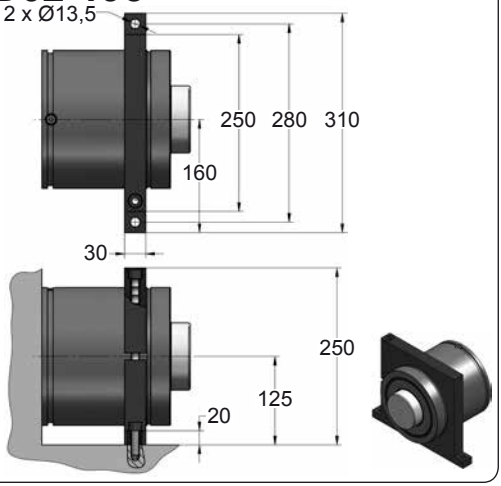









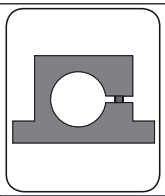

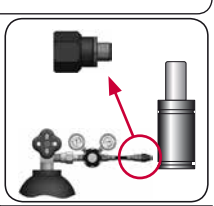

| CODE | | CD 18500 050 | KIT XXXXXXX-S<br>KIT XXXXXXX-C | D02-195 | 18 GA 5 |
|---|---|---|---|---|---|
| ENG | ORDER | GAS SPRING | REPAIR KIT | FLANGE | CHARGING ADAPTER |
| DEU | BESTELLUNG | GASDRUCKFEDER | ERSATZTEILSATZ | FLANSCHE | LADEADAPTER |
| FRA | COMMANDE | RESSORT À GAZ | KIT DE RÉPARATION | BRIDE | RACCORD DE CHARGE |
| ITA | ORDINE | CILINDRO AD AZOTO | KIT DI MANUTENZIONE | FLANGE | ADATTATORE DI CARICO |
| ESP | PEDIDO | RESORTE DE GAS | KIT DE REPARACION | BRIDA | ADAPTADOR DE CARGA |
| POR | PEDIDO | CILINDRO DE GÁS | KIT DE MANUTENÇÃO | FLANGE | ADAPTADOR DE CARGA |

AZOL GAS

# CM HEAVY DUTY MEDIUM

| MODEL | $F_0$ | Ø | S | L1 | Pmax | Charge Port | | |
|---|---|---|---|---|---|---|---|---|
| CM 200 | 200 | Ø25 | 10 - 80 | 80 - 220 | 180 | M6 | ✗ | ✓ |
| CM 300 | 300 | Ø32 | 12 - 100 | 84 - 260 | 150 | M6 | ✓ | ✓ |
| CM 350 V1 | 350 | Ø32 | 10 - 80 | 70 - 210 | 150 | M6 | ✓ | ✓ |
| CM 500 V1 | 500 | Ø38 | 10 - 100 | 75 - 260 | 150 | M6 | ✓ | ✓ |
| CM 600 V1 | 600 | Ø45 | 12 - 100 | 84 - 260 | 150 | M6 | ✓ | ✓ |
| CM 1000 V1 | 1000 | Ø50 | 10 - 200 | 105 - 495 | 160 | G1/8" | ✓ | ✓ |
| CM 1500 V1 | 1500 | Ø63 | 10 - 200 | 105 - 495 | 150 | G1/8" | ✓ | ✓ |
| CM 2500 V1 | 2500 | Ø75 | 10 - 200 | 115 - 510 | 160 | G1/8" | ✓ | ✓ |
| CM 4000 V1 | 4000 | Ø95 | 25 - 200 | 155 - 530 | 150 | G1/8" | ✓ | ✓ |
| CM 6500 V1 | 6500 | Ø120 | 25 - 200 | 165 - 540 | 150 | G1/8" | ✓ | ✓ |
| CM 10000 | 10000 | Ø150 | 25 - 200 | 186 - 536 | 160 | G1/8" | ✓ | ✓ |

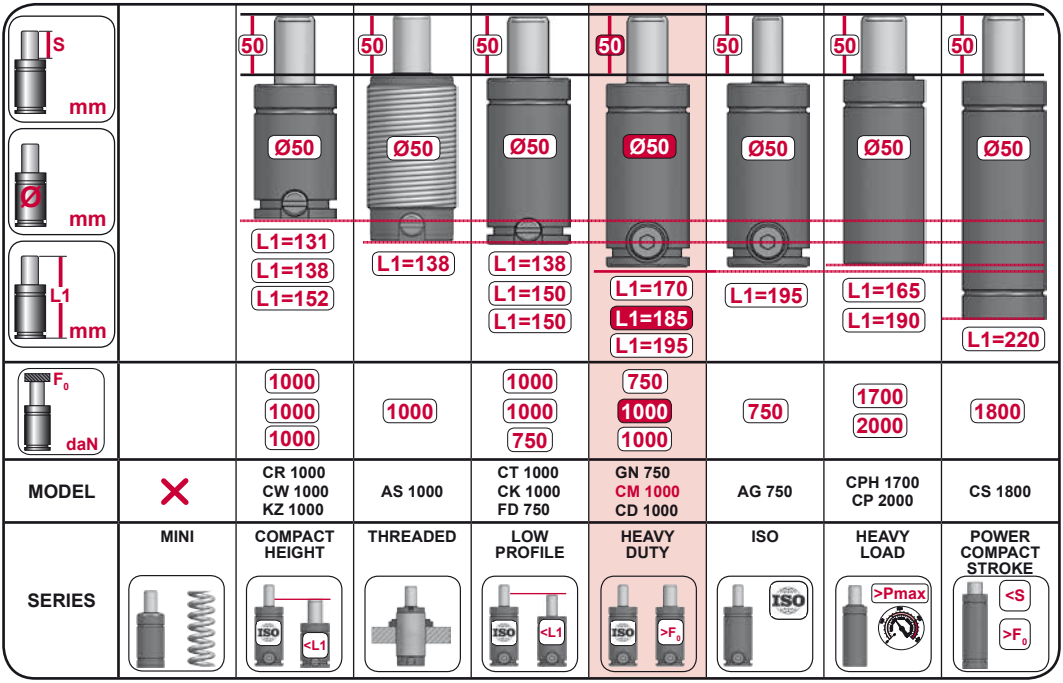

# CM 200

*Heavy Duty*

AZOL GAS

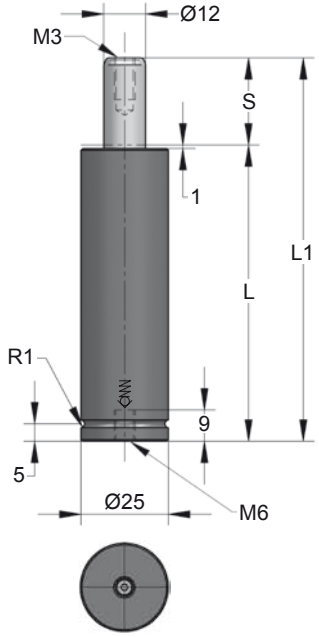


| ORDER | S (mm) | L1 ±0,25 (mm) | L (mm) | Kg. |
|---|---|---|---|---|
| CM 200 010 | 10 | 80 | 70 | 0.20 |
| CM 200 015 | 15 | 90 | 75 | 0.21 |
| CM 200 025 | 25 | 110 | 85 | 0.23 |
| CM 200 038 | 38 | 136 | 98 | 0.26 |
| CM 200 050 | 50 | 160 | 110 | 0.29 |
| CM 200 063 | 63.5 | 186.5 | 123 | 0.32 |
| CM 200 080 | 80 | 220 | 140 | 0.36 |

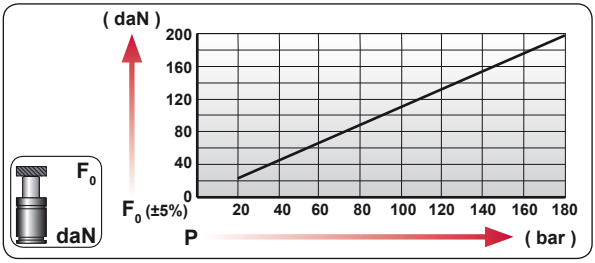


| CODE | bar | psi | $F_0$ daN | $F_1$ daN |
|---|---|---|---|---|
| CM 200 050 | 180 | 2610 | 205 | 300 |
| CM-H 200 050 | 0 | 0 | --- | --- |

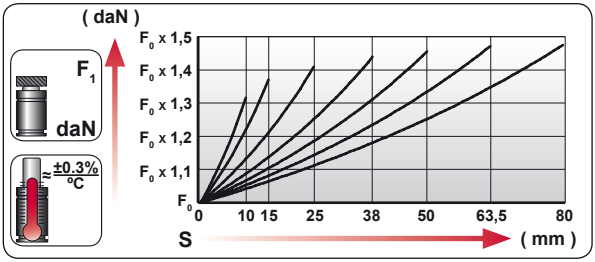


| | |
|---|---|
| ENG | ORDER |
| DEU | BESTELLUNG |
| FRA | COMMANDE |
| ITA | ORDINE |
| ESP | PEDIDO |
| POR | PEDIDO |




CM 200 50

CM 200 050

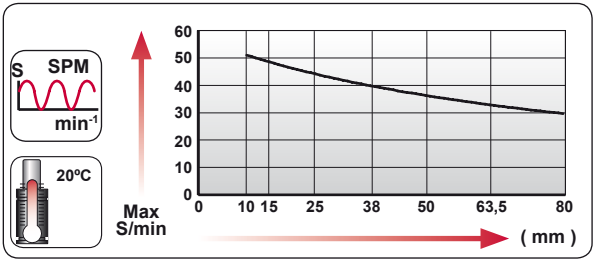


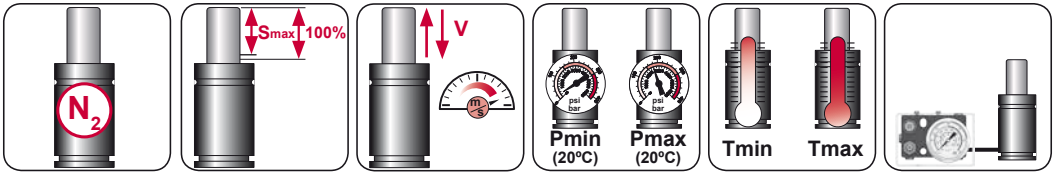


| $N_2$ | Smax < 90% | Vmax 1,6 m/s | bar psi 20 290 | bar psi 180 2610 | ºC ºF 0 32 | ºC ºF 80 176 | |
|---|---|---|---|---|---|---|---|

AZOL GAS

# CM 200 MOUNTS

*Heavy Duty*

## A14-025

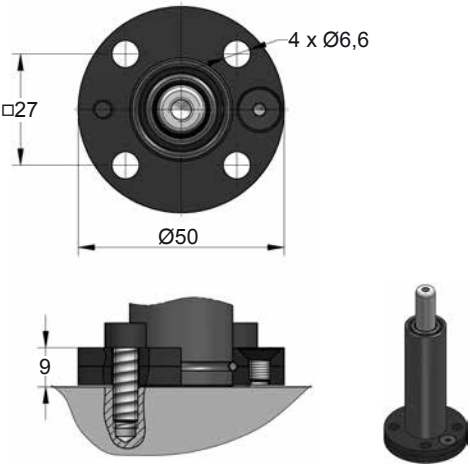


## A44-025

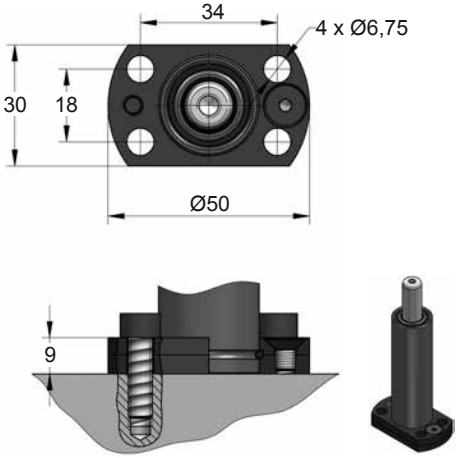


## A49-025

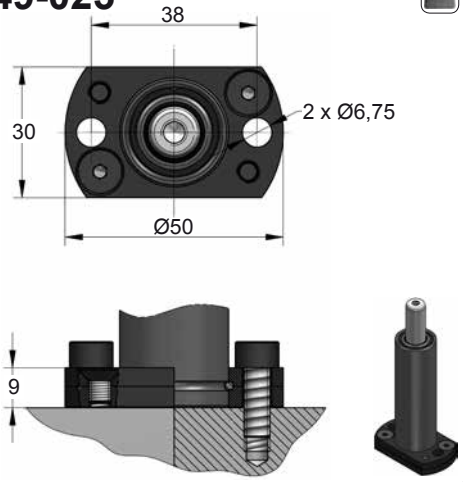









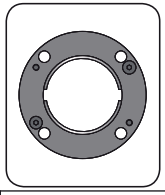

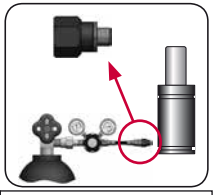

| CODE | | CM 200 050 | KIT XXXXXXX-S<br>KIT XXXXXXX-C | A14-025 | 06 GA 11 |
|---|---|---|---|---|---|
| ENG | ORDER | GAS SPRING | REPAIR KIT | FLANGE | CHARGING ADAPTER |
| DEU | BESTELLUNG | GASDRUCKFEDER | ERSATZTEILSATZ | FLANSCHE | LADEADAPTER |
| FRA | COMMANDE | RESSORT À GAZ | KIT DE RÉPARATION | BRIDE | RACCORD DE CHARGE |
| ITA | ORDINE | CILINDRO AD AZOTO | KIT DI MANUTENZIONE | FLANGE | ADATTATORE DI CARICO |
| ESP | PEDIDO | RESORTE DE GAS | KIT DE REPARACION | BRIDA | ADAPTADOR DE CARGA |
| POR | PEDIDO | CILINDRO DE GÁS | KIT DE MANUTENÇÃO | FLANGE | ADAPTADOR DE CARGA |

# CM 300

*Heavy Duty*

AZOL GAS

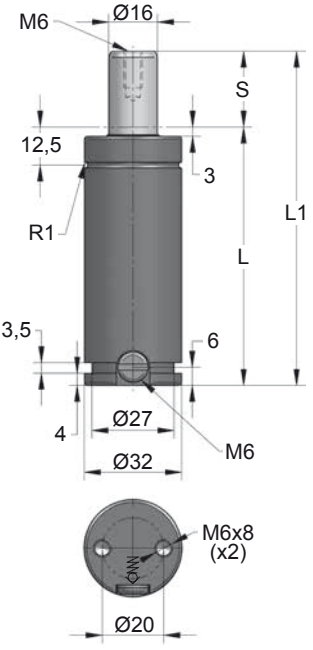


| ORDER | S (mm) | L1 ±0,25 (mm) | L (mm) | Kg. |
|---|---|---|---|---|
| CM 300 012 | 12 | 84 | 72 | 0.36 |
| CM 300 025 | 25 | 110 | 85 | 0.41 |
| CM 300 038 | 38 | 136 | 98 | 0.46 |
| CM 300 050 | 50 | 160 | 110 | 0.51 |
| CM 300 063 | 63 | 186 | 123 | 0.56 |
| CM 300 080 | 80 | 220 | 140 | 0.63 |
| CM 300 100 | 100 | 260 | 160 | 0.71 |

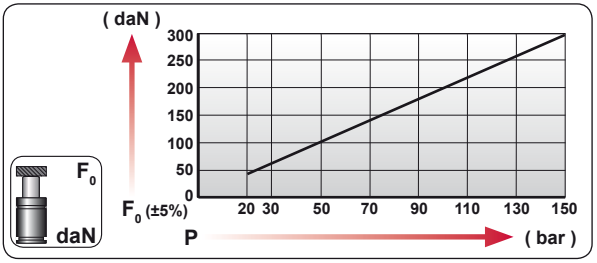


| CODE | bar | psi | F0 daN | F1 daN |
|---|---|---|---|---|
| CM 300 050 | 150 | 2175 | 300 | 480 |
| CM-H 300 050 | 0 | 0 | --- | --- |

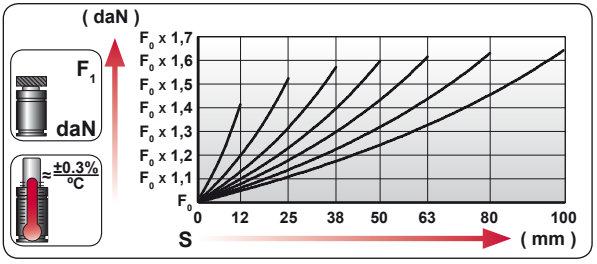


| | |
|---|---|
| ENG | ORDER |
| DEU | BESTELLUNG |
| FRA | COMMANDE |
| ITA | ORDINE |
| ESP | PEDIDO |
| POR | PEDIDO |




CM 300 50

CM 300 050

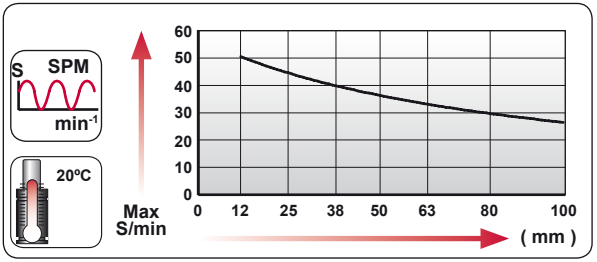


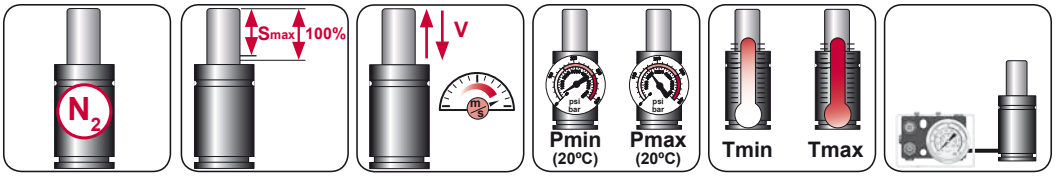


| $N_2$ | Smax < 90% | Vmax 1,6 m/s | bar psi 20 290 | bar psi 150 2175 | °C °F 0 32 | °C °F 80 176 | 600 CP- |
|---|---|---|---|---|---|---|---|

AZOL GAS

# CM 300 MOUNTS

*Heavy Duty*

## A14-032

ISO E24.54.815.G EM24.54.700/F

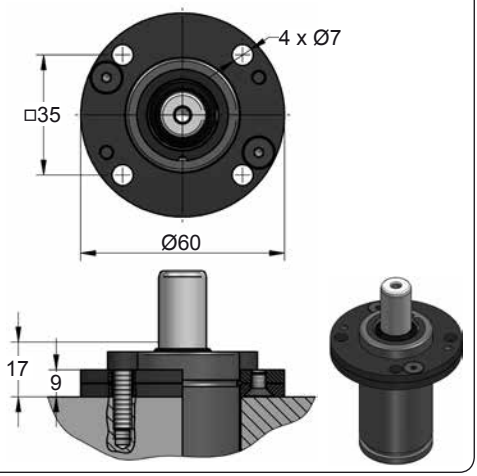


## A44-032

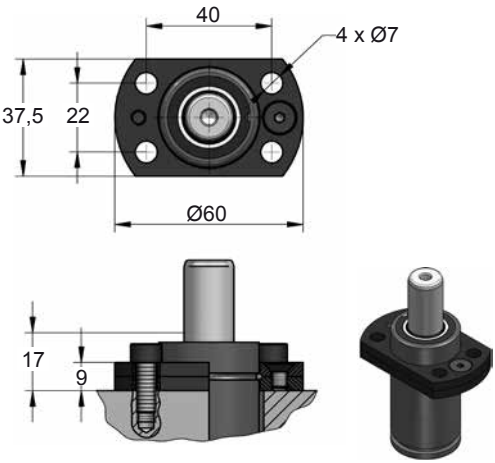


## C20-032

ISO VDI E24.54.815.G EM24.54.700/F

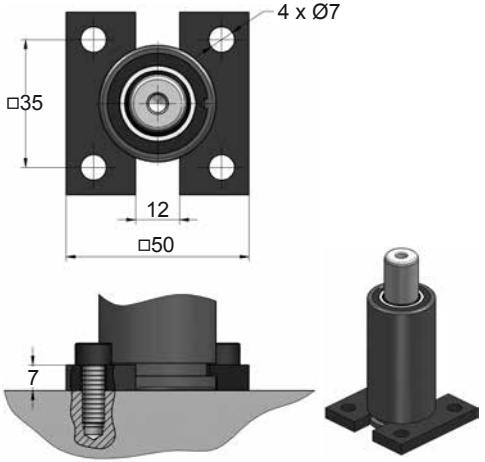


## D67-032

VDI

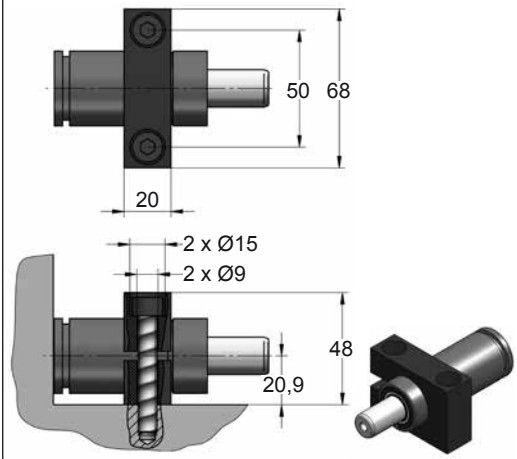









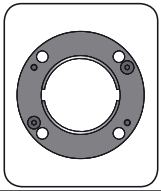

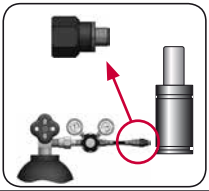

| CODE | | CM 300 050 | KIT XXXXXXX-S<br>KIT XXXXXXX-C | A14-032 | 06 GA 11 |
|---|---|---|---|---|---|
| ENG | ORDER | GAS SPRING | REPAIR KIT | FLANGE | CHARGING ADAPTER |
| DEU | BESTELLUNG | GASDRUCKFEDER | ERSATZTEILSATZ | FLANSCHE | LADEADAPTER |
| FRA | COMMANDE | RESSORT À GAZ | KIT DE RÉPARATION | BRIDE | RACCORD DE CHARGE |
| ITA | ORDINE | CILINDRO AD AZOTO | KIT DI MANUTENZIONE | FLANGE | ADATTATORE DI CARICO |
| ESP | PEDIDO | RESORTE DE GAS | KIT DE REPARACION | BRIDA | ADAPTADOR DE CARGA |
| POR | PEDIDO | CILINDRO DE GÁS | KIT DE MANUTENÇÃO | FLANGE | ADAPTADOR DE CARGA |

# CM 350

*Heavy Duty*

AZOL GAS

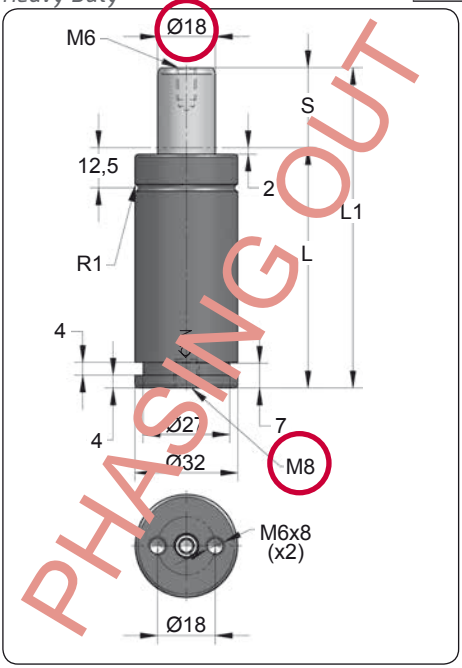


PHASING OUT

| ORDER | S (mm) | L1 ±0,25 (mm) | L (mm) | Kg. |
|---|---|---|---|---|
| CM 350 010 | 10 | 70 | 60 | 0.30 |
| CM 350 015 | 15 | 80 | 65 | 0.33 |
| CM 350 025 | 25 | 100 | 75 | 0.37 |
| CM 350 038 | 38 | 126 | 88 | 0.41 |
| CM 350 050 | 50 | 150 | 100 | 0.47 |
| CM 350 063 | 63 | 176 | 113 | 0.51 |
| CM 350 080 | 80 | 210 | 130 | 0.57 |

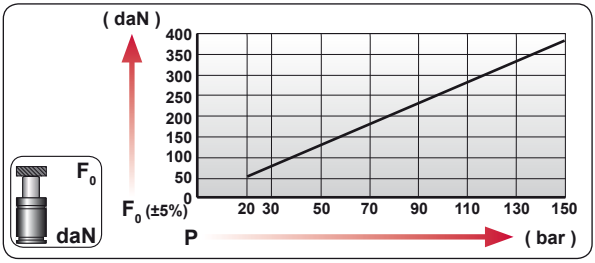


| CODE | bar | psi | F0 daN | F1 daN |
|---|---|---|---|---|
| CM 350 050 | 140 | 2030 | 355 | 635 |
| CM-H 350 050 | 0 | 0 | --- | --- |

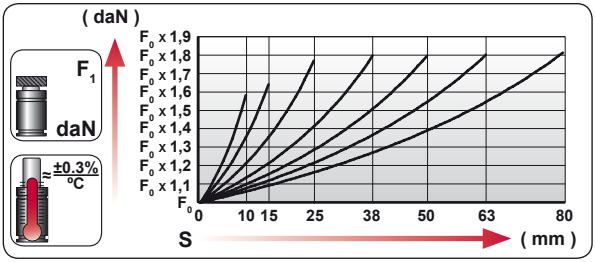


| | |
|---|---|
| ENG | ORDER |
| DEU | BESTELLUNG |
| FRA | COMMANDE |
| ITA | ORDINE |
| ESP | PEDIDO |
| POR | PEDIDO |

F0 daN S mm

CM 350 50

CM 350 050

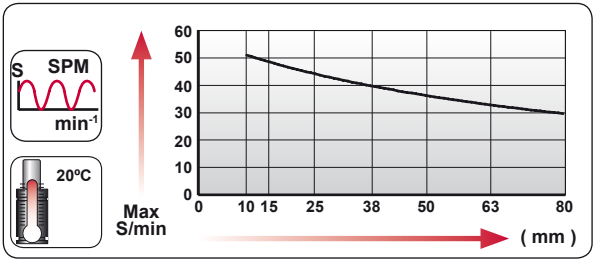


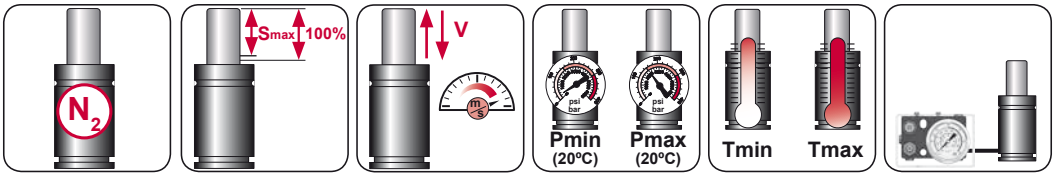


| $N_2$ | Smax < 90% | Vmax 1,6 m/s | bar psi 20 290 | bar psi 150 2175 | ºC ºF 0 32 | ºC ºF 80 176 | |
|---|---|---|---|---|---|---|---|

AZOL GAS

# CM 350 MOUNTS

*Heavy Duty*

## A14-032

ISO E24.54.815.G EM24.54.700/F

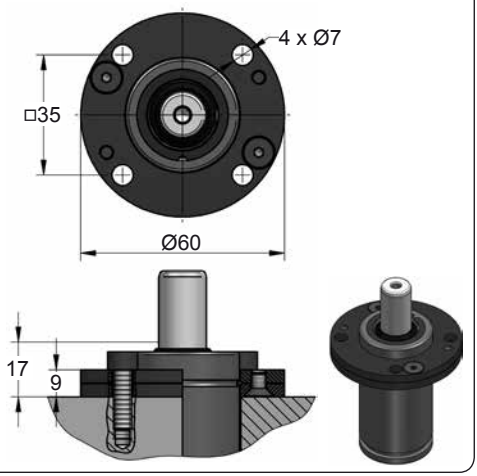


## A44-032

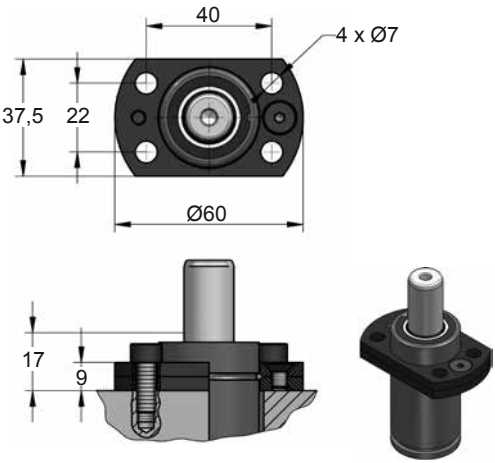


## C20-032

ISO VDI E24.54.815.G EM24.54.700/F

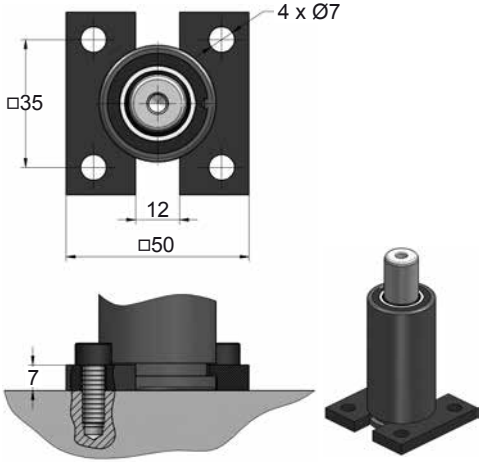


## D67-032

VDI

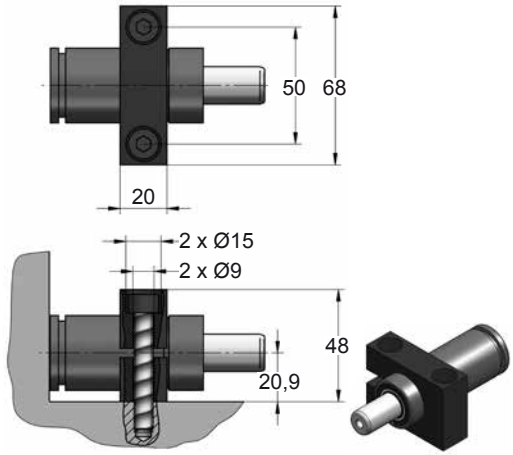









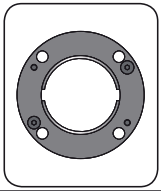

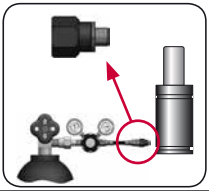

| CODE | | CM 350 050 | KIT XXXXXXX-S<br>KIT XXXXXXX-C | A14-032 | 08 GA 2 |
|---|---|---|---|---|---|
| ENG | ORDER | GAS SPRING | REPAIR KIT | FLANGE | CHARGING ADAPTER |
| DEU | BESTELLUNG | GASDRUCKFEDER | ERSATZTEILSATZ | FLANSCHE | LADEADAPTER |
| FRA | COMMANDE | RESSORT À GAZ | KIT DE RÉPARATION | BRIDE | RACCORD DE CHARGE |
| ITA | ORDINE | CILINDRO AD AZOTO | KIT DI MANUTENZIONE | FLANGE | ADATTATORE DI CARICO |
| ESP | PEDIDO | RESORTE DE GAS | KIT DE REPARACION | BRIDA | ADAPTADOR DE CARGA |
| POR | PEDIDO | CILINDRO DE GÁS | KIT DE MANUTENÇÃO | FLANGE | ADAPTADOR DE CARGA |

# CM 350 V1

*Heavy Duty*

AZOL GAS

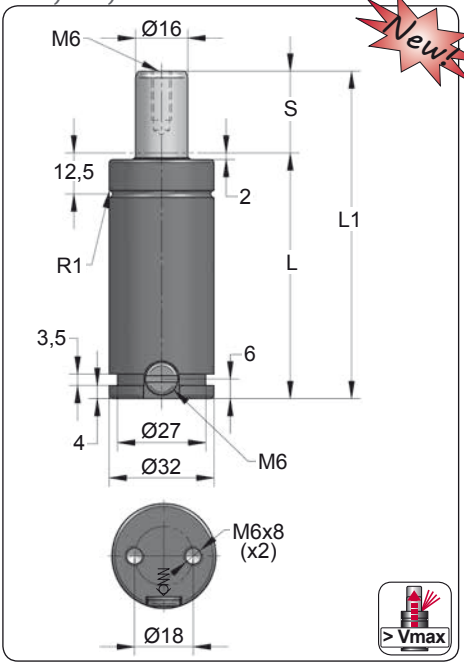


Newt

| ORDER | S (mm) | L1 ±0,25 (mm) | L (mm) | Kg. |
|---|---|---|---|---|
| CM 350 010 V1 | 10 | 70 | 60 | 0.29 |
| CM 350 015 V1 | 15 | 80 | 65 | 0.31 |
| CM 350 025 V1 | 25 | 100 | 75 | 0.35 |
| CM 350 038 V1 | 38 | 126 | 88 | 0.40 |
| CM 350 050 V1 | 50 | 150 | 100 | 0.44 |
| CM 350 063 V1 | 63 | 176 | 113 | 0.50 |
| CM 350 080 V1 | 80 | 210 | 130 | 0.56 |

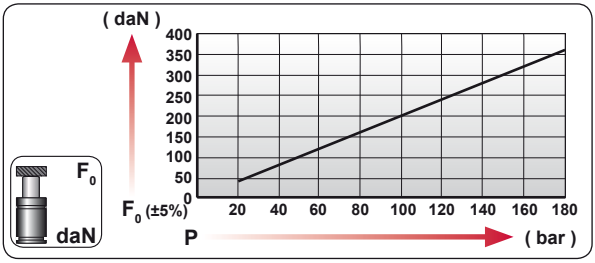


| CODE | bar | psi | $F_0$ daN | $F_1$ daN |
|---|---|---|---|---|
| CM 350 050 V1 | 175 | 2540 | 350 | 550 |
| CM-H 350 050 V1 | 0 | 0 | --- | --- |

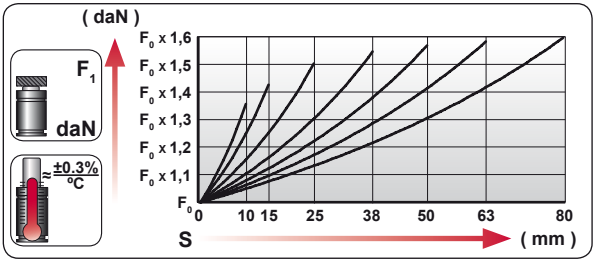


| | |
|---|---|
| ENG | ORDER |
| DEU | BESTELLUNG |
| FRA | COMMANDE |
| ITA | ORDINE |
| ESP | PEDIDO |
| POR | PEDIDO |

$F_0$ daN — S mm

CM 350 50

CM 350 050 V1

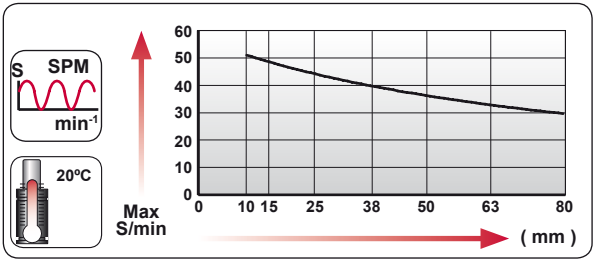


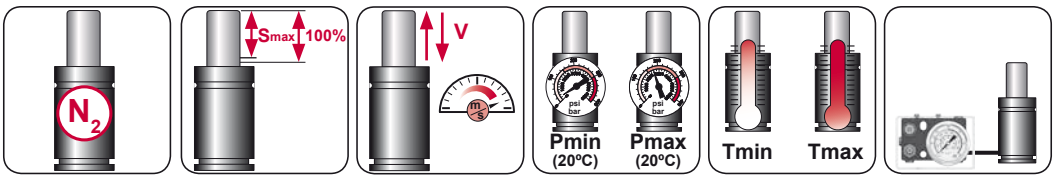


| $N_2$ | Smax < 90% | Vmax 1,6 m/s | bar psi 20 290 | bar psi 180 2610 | ºC ºF 0 32 | ºC ºF 80 176 | 600 CP- |
|---|---|---|---|---|---|---|---|

AZOL GAS

# CM 350 V1 MOUNTS

*Heavy Duty*

## A14-032

ISO E24.54.815.G EM24.54.700/F

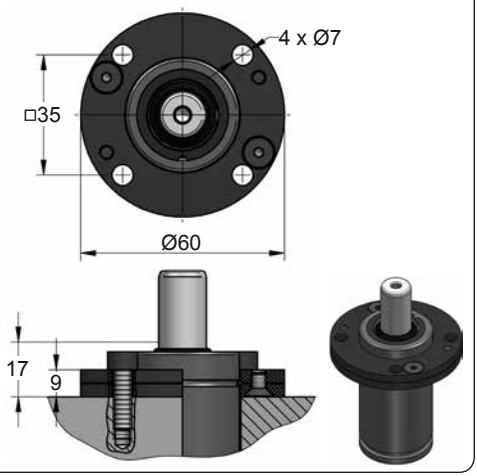


## A44-032

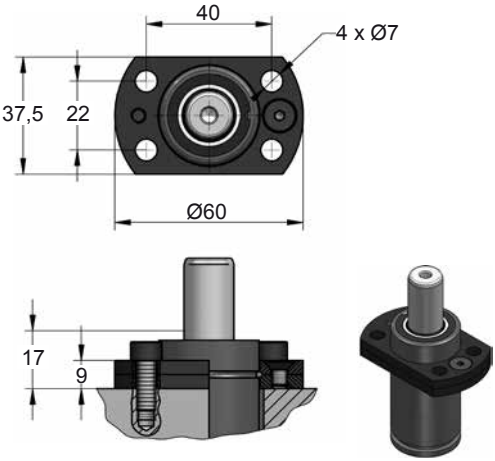


## C20-032

ISO VDI E24.54.815.G EM24.54.700/F

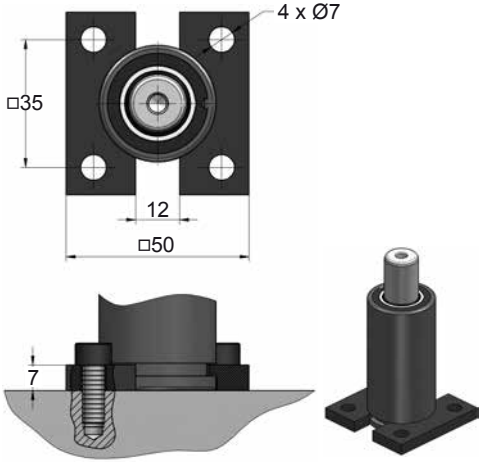


## D67-032

VDI

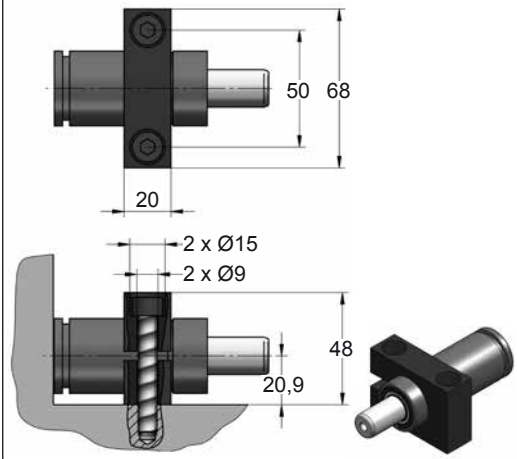









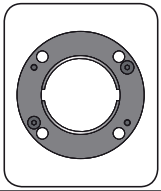

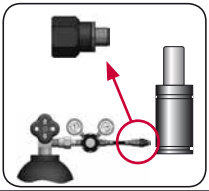

| CODE | | CM 350 050 V1 | KIT XXXXXXX-S<br>KIT XXXXXXX-C | A14-032 | 06 GA 11 |
|---|---|---|---|---|---|
| ENG | ORDER | GAS SPRING | REPAIR KIT | FLANGE | CHARGING ADAPTER |
| DEU | BESTELLUNG | GASDRUCKFEDER | ERSATZTEILSATZ | FLANSCHE | LADEADAPTER |
| FRA | COMMANDE | RESSORT À GAZ | KIT DE RÉPARATION | BRIDE | RACCORD DE CHARGE |
| ITA | ORDINE | CILINDRO AD AZOTO | KIT DI MANUTENZIONE | FLANGE | ADATTATORE DI CARICO |
| ESP | PEDIDO | RESORTE DE GAS | KIT DE REPARACION | BRIDA | ADAPTADOR DE CARGA |
| POR | PEDIDO | CILINDRO DE GÁS | KIT DE MANUTENÇÃO | FLANGE | ADAPTADOR DE CARGA |

# CM 500

*Heavy Duty*

AZOL GAS

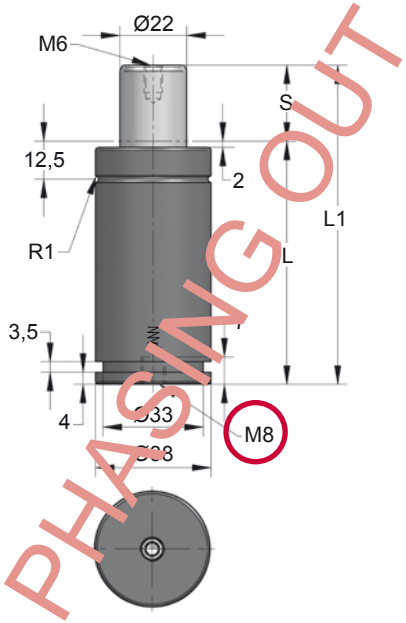


| ORDER | S (mm) | L1 ±0,25 (mm) | L (mm) | Kg. |
|---|---|---|---|---|
| CM 500 010 | 10 | 75 | 65 | 0.46 |
| CM 500 015 | 15 | 85 | 70 | 0.49 |
| CM 500 025 | 25 | 105 | 80 | 0.54 |
| CM 500 038 | 38 | 131 | 93 | 0.64 |
| CM 500 050 | 50 | 155 | 105 | 0.68 |
| CM 500 063 | 63 | 186 | 123 | 0.77 |
| CM 500 080 | 80 | 220 | 140 | 0.84 |
| CM 500 100 | 100 | 260 | 160 | 0.99 |

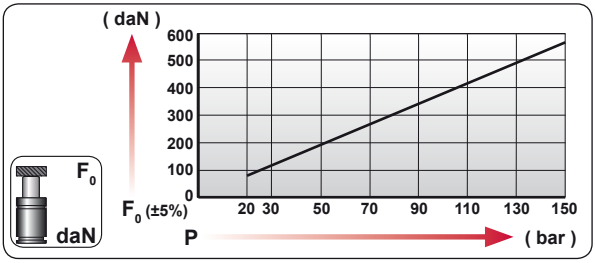


| CODE | bar | psi | F0 daN | F1 daN |
|---|---|---|---|---|
| CM 500 050 | 130 | 1885 | 495 | 855 |
| CM-H 500 050 | 0 | 0 | --- | --- |

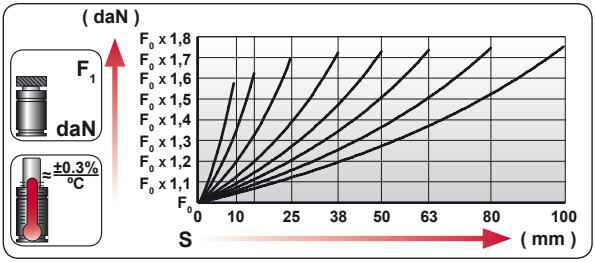


| | |
|---|---|
| ENG | ORDER |
| DEU | BESTELLUNG |
| FRA | COMMANDE |
| ITA | ORDINE |
| ESP | PEDIDO |
| POR | PEDIDO |

F0 daN — S mm

CM 500 050

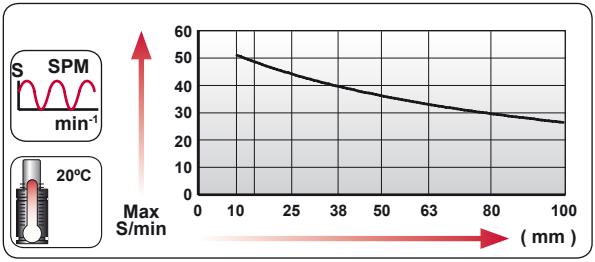


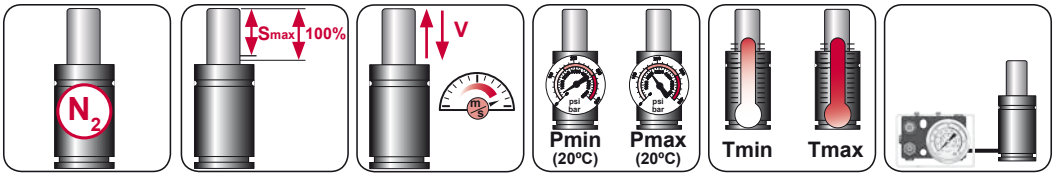


| $N_2$ | Smax < 90% | Vmax 1,6 m/s | bar psi 20 290 | bar psi 150 2175 | ºC ºF 0 32 | ºC ºF 80 176 | |
|---|---|---|---|---|---|---|---|

AZOL GAS

# CM 500 MOUNTS

*Heavy Duty*

## A14-038

E24.54.815.G
EM24.54.700/F

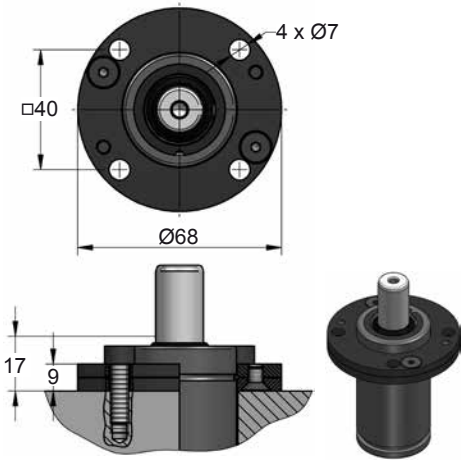


## A34-038

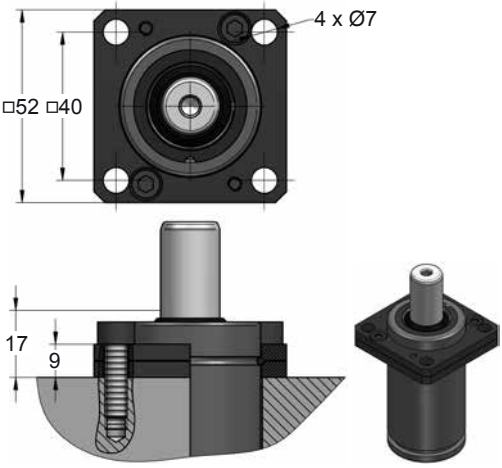


## C20-038

E24.54.815.G
EM24.54.700/F

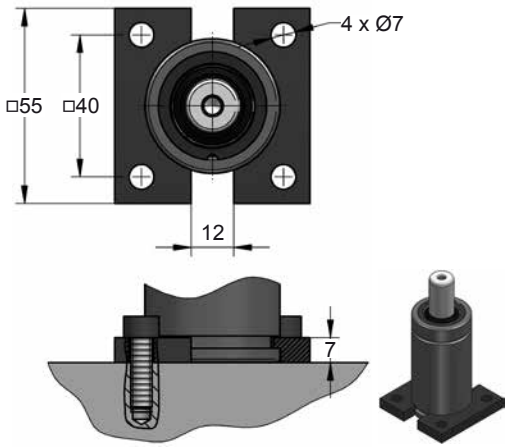


## D67-038

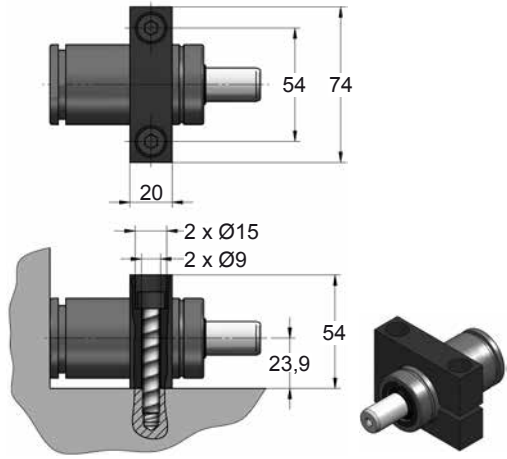









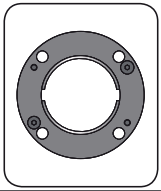

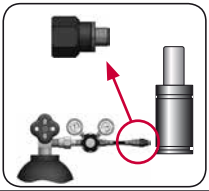

| CODE | | CM 500 050 | KIT XXXXXXX-S<br>KIT XXXXXXX-C | A14-038 | 08 GA 2 |
|---|---|---|---|---|---|
| ENG | ORDER | GAS SPRING | REPAIR KIT | FLANGE | CHARGING ADAPTER |
| DEU | BESTELLUNG | GASDRUCKFEDER | ERSATZTEILSATZ | FLANSCHE | LADEADAPTER |
| FRA | COMMANDE | RESSORT À GAZ | KIT DE RÉPARATION | BRIDE | RACCORD DE CHARGE |
| ITA | ORDINE | CILINDRO AD AZOTO | KIT DI MANUTENZIONE | FLANGE | ADATTATORE DI CARICO |
| ESP | PEDIDO | RESORTE DE GAS | KIT DE REPARACION | BRIDA | ADAPTADOR DE CARGA |
| POR | PEDIDO | CILINDRO DE GÁS | KIT DE MANUTENÇÃO | FLANGE | ADAPTADOR DE CARGA |

# CM 500 V1

*Heavy Duty*

AZOL GAS

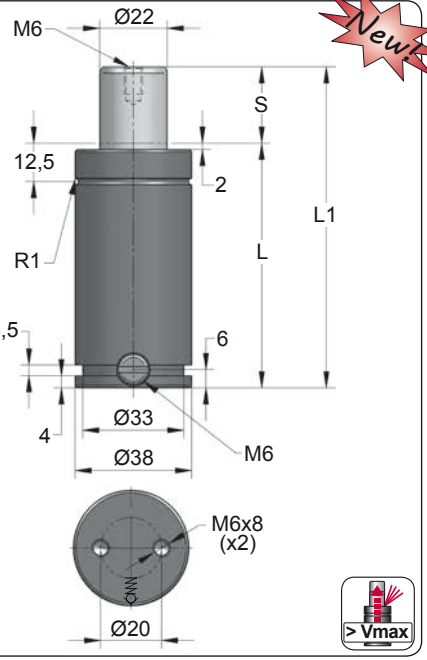


Newt

| ORDER | S (mm) | L1 ±0,25 (mm) | L (mm) | Kg. |
|---|---|---|---|---|
| CM 500 010 V1 | 10 | 75 | 65 | 0.42 |
| CM 500 015 V1 | 15 | 85 | 70 | 0.45 |
| CM 500 025 V1 | 25 | 105 | 80 | 0.49 |
| CM 500 038 V1 | 38 | 131 | 93 | 0.56 |
| CM 500 050 V1 | 50 | 155 | 105 | 0.62 |
| CM 500 063 V1 | 63 | 186 | 123 | 0.70 |
| CM 500 080 V1 | 80 | 220 | 140 | 0.78 |
| CM 500 100 V1 | 100 | 260 | 160 | 0.88 |

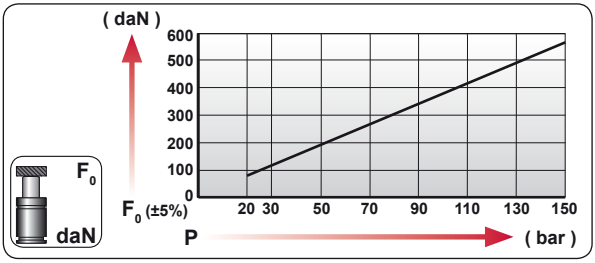


| CODE | bar | psi | $F_0$ daN | $F_1$ daN |
|---|---|---|---|---|
| CM 500 050 V1 | 130 | 1885 | 495 | 855 |
| CM-H 500 050 V1 | 0 | 0 | --- | --- |

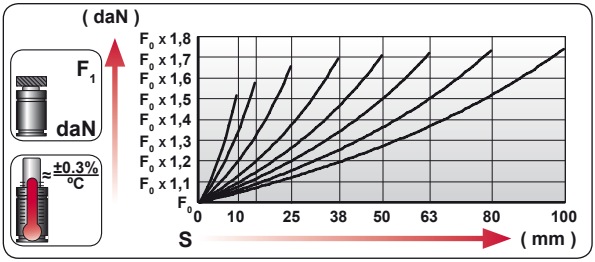


| | |
|---|---|
| ENG | ORDER |
| DEU | BESTELLUNG |
| FRA | COMMANDE |
| ITA | ORDINE |
| ESP | PEDIDO |
| POR | PEDIDO |




CM 500 50

CM 500 050 V1

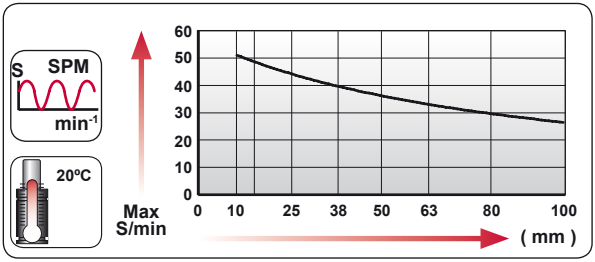


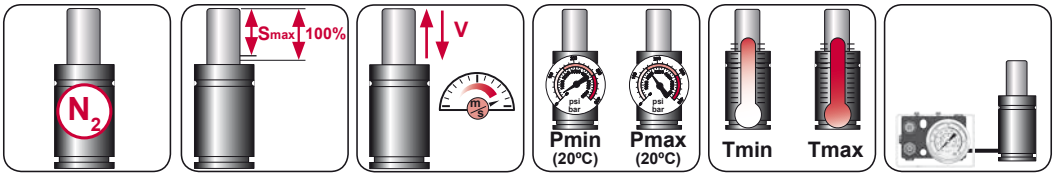


| $N_2$ | Smax < 90% | Vmax 1,6 m/s | bar psi 20 290 | bar psi 150 2175 | ºC ºF 0 32 | ºC ºF 80 176 | 600 CP- |
|---|---|---|---|---|---|---|---|

AZOL GAS

# CM 500 V1 MOUNTS

*Heavy Duty*

## A14-038

ISO · E24.54.815.G · EM24.54.700/F

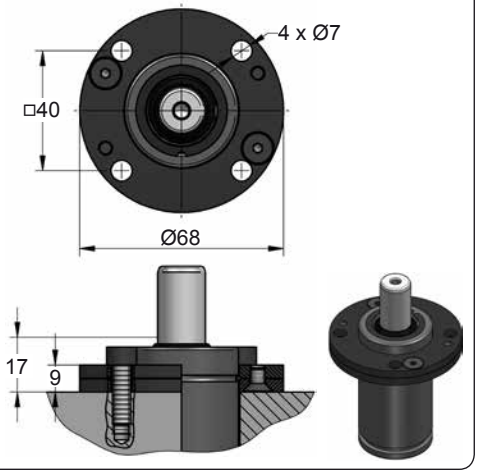


## A34-038

ISO · VDI

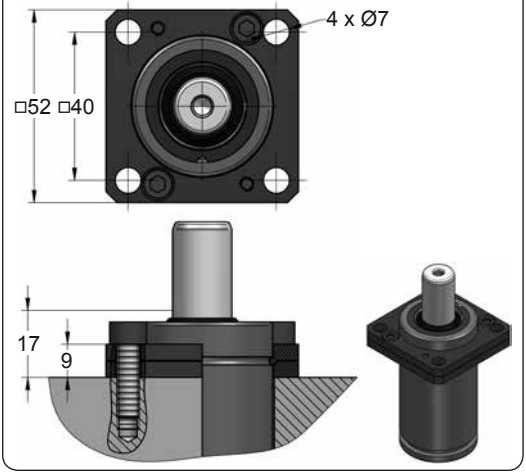


## C20-038

ISO · VDI · E24.54.815.G · EM24.54.700/F

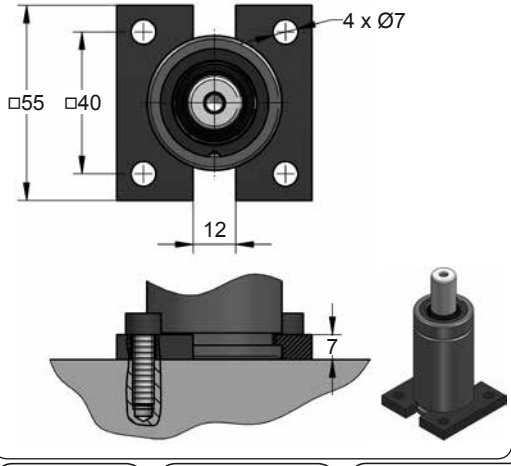


## D67-038

VDI

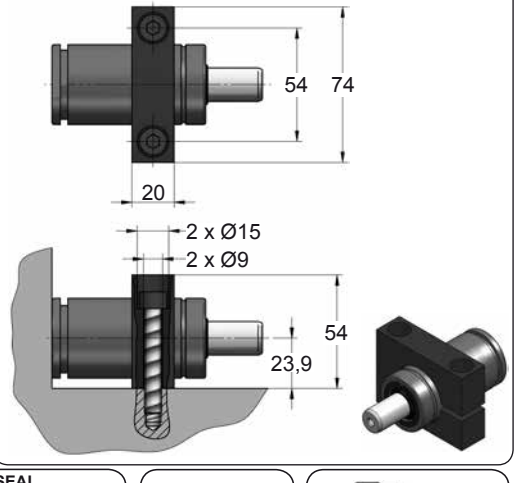









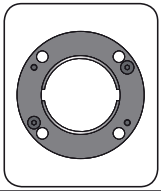

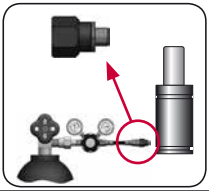

| CODE | | CM 500 050 V1 | KIT XXXXXXX-S<br>KIT XXXXXXX-C | A14-038 | 06 GA 11 |
|---|---|---|---|---|---|
| ENG | ORDER | GAS SPRING | REPAIR KIT | FLANGE | CHARGING ADAPTER |
| DEU | BESTELLUNG | GASDRUCKFEDER | ERSATZTEILSATZ | FLANSCHE | LADEADAPTER |
| FRA | COMMANDE | RESSORT À GAZ | KIT DE RÉPARATION | BRIDE | RACCORD DE CHARGE |
| ITA | ORDINE | CILINDRO AD AZOTO | KIT DI MANUTENZIONE | FLANGE | ADATTATORE DI CARICO |
| ESP | PEDIDO | RESORTE DE GAS | KIT DE REPARACION | BRIDA | ADAPTADOR DE CARGA |
| POR | PEDIDO | CILINDRO DE GÁS | KIT DE MANUTENÇÃO | FLANGE | ADAPTADOR DE CARGA |

# CM 600

*Heavy Duty*

AZOL GAS

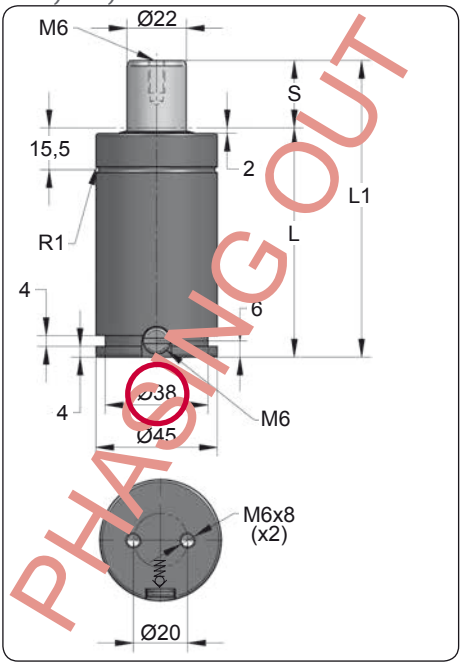


| ORDER | S (mm) | L1 ±0,25 (mm) | L (mm) | Kg. |
|---|---|---|---|---|
| CM 600 012 | 12 | 84 | 72 | 0.67 |
| CM 600 025 | 25 | 110 | 85 | 0.75 |
| CM 600 038 | 38 | 136 | 98 | 0.84 |
| CM 600 050 | 50 | 160 | 110 | 0.92 |
| CM 600 063 | 63 | 186 | 123 | 1.00 |
| CM 600 080 | 80 | 220 | 140 | 1.11 |
| CM 600 100 | 100 | 260 | 160 | 1.24 |

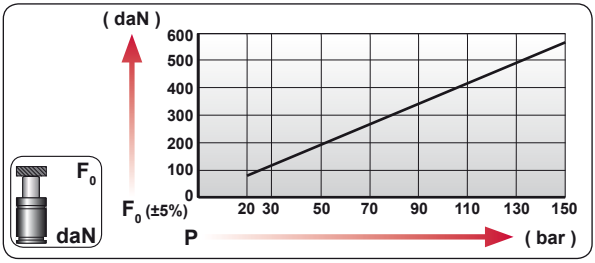


| CODE | bar | psi | $F_0$ daN | $F_1$ daN |
|---|---|---|---|---|
| CM 600 050 | 150 | 2175 | 570 | 805 |
| CM-H 600 050 | 0 | 0 | --- | --- |

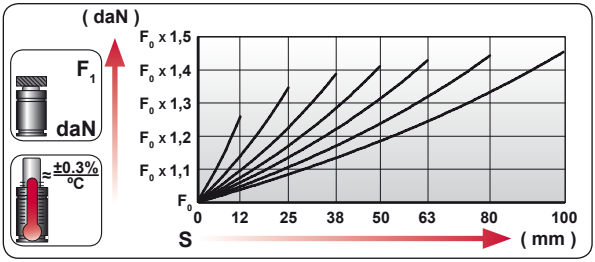


| | |
|---|---|
| ENG | ORDER |
| DEU | BESTELLUNG |
| FRA | COMMANDE |
| ITA | ORDINE |
| ESP | PEDIDO |
| POR | PEDIDO |

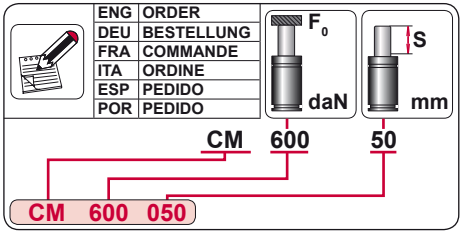


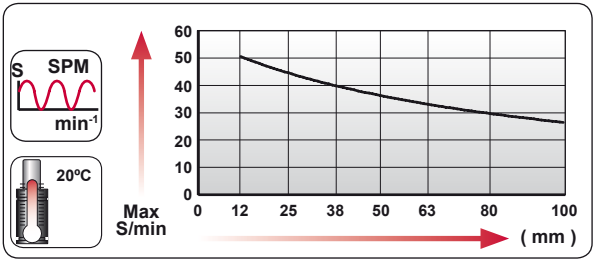


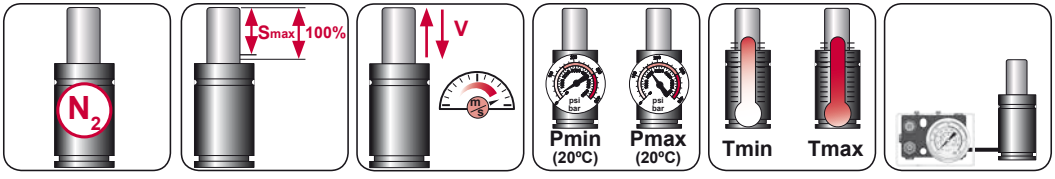


| $N_2$ | Smax < 90% | Vmax 1,6 m/s | bar psi 20 290 | bar psi 150 2175 | ºC ºF 0 32 | ºC ºF 80 176 | 600 CP- |
|---|---|---|---|---|---|---|---|

AZOL GAS

# CM 600 MOUNTS

*Heavy Duty*

## A14-045

ISO E24.54.815.G EM24.54.700/F

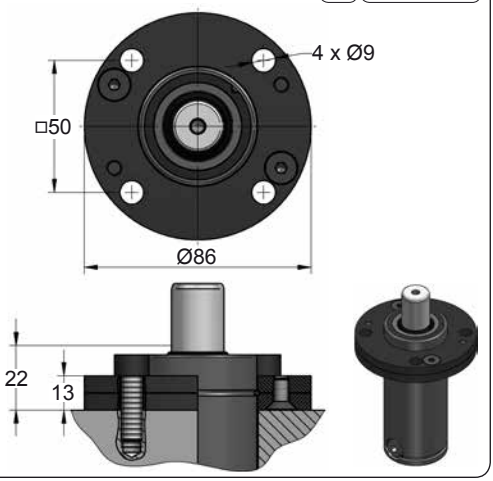


## A34-045

ISO VDI

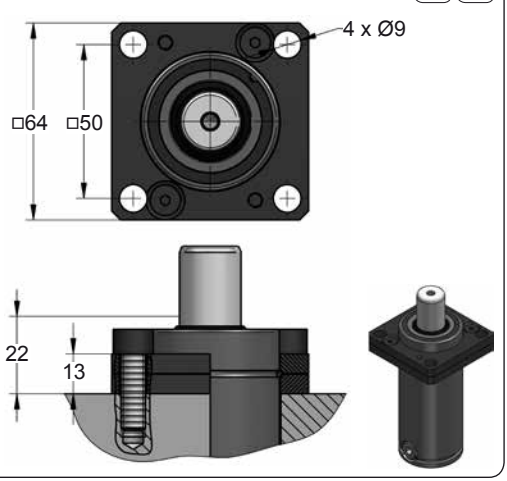


## D67-045

VDI

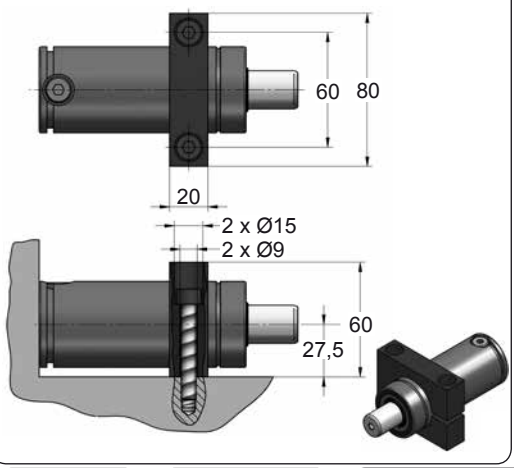









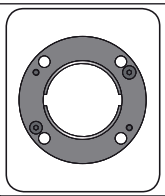

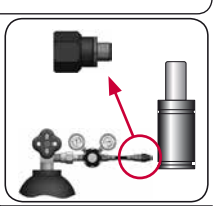

| CODE | | CM 600 050 | KIT XXXXXXX-S<br>KIT XXXXXXX-C | A14-045 | 06 GA 11 |
|---|---|---|---|---|---|
| ENG | ORDER | GAS SPRING | REPAIR KIT | FLANGE | CHARGING ADAPTER |
| DEU | BESTELLUNG | GASDRUCKFEDER | ERSATZTEILSATZ | FLANSCHE | LADEADAPTER |
| FRA | COMMANDE | RESSORT À GAZ | KIT DE RÉPARATION | BRIDE | RACCORD DE CHARGE |
| ITA | ORDINE | CILINDRO AD AZOTO | KIT DI MANUTENZIONE | FLANGE | ADATTATORE DI CARICO |
| ESP | PEDIDO | RESORTE DE GAS | KIT DE REPARACION | BRIDA | ADAPTADOR DE CARGA |
| POR | PEDIDO | CILINDRO DE GÁS | KIT DE MANUTENÇÃO | FLANGE | ADAPTADOR DE CARGA |

# CM 600 V1

*Heavy Duty*

AZOL GAS

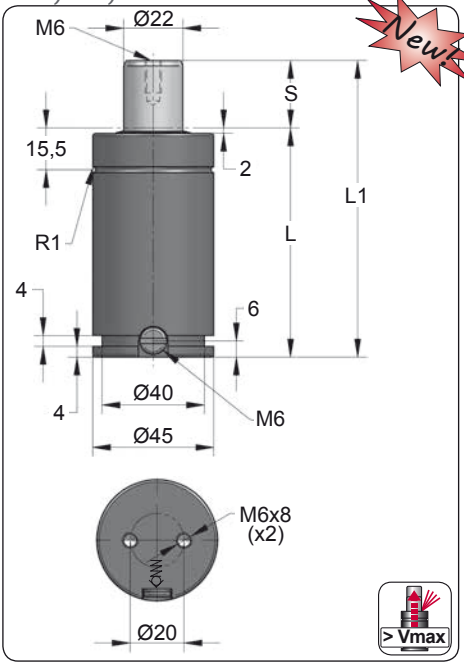


Newt

| ORDER | S (mm) | L1 ±0,25 (mm) | L (mm) | Kg. |
|---|---|---|---|---|
| CM 600 012 V1 | 12 | 84 | 72 | 0.67 |
| CM 600 025 V1 | 25 | 110 | 85 | 0.75 |
| CM 600 038 V1 | 38 | 136 | 98 | 0.84 |
| CM 600 050 V1 | 50 | 160 | 110 | 0.92 |
| CM 600 063 V1 | 63 | 186 | 123 | 1.00 |
| CM 600 080 V1 | 80 | 220 | 140 | 1.11 |
| CM 600 100 V1 | 100 | 260 | 160 | 1.24 |

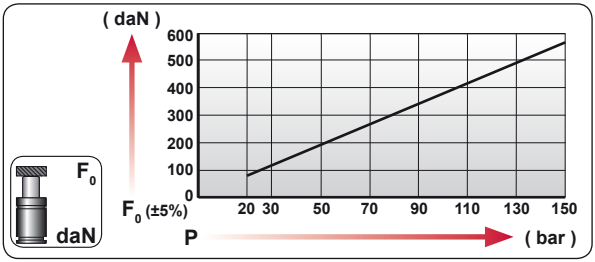


| CODE | bar | psi | F0 daN | F1 daN |
|---|---|---|---|---|
| CM 600 050 V1 | 150 | 2175 | 570 | 805 |
| CM-H 600 050 V1 | 0 | 0 | --- | --- |

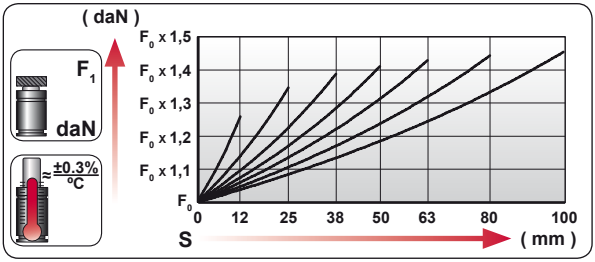


| | |
|---|---|
| ENG | ORDER |
| DEU | BESTELLUNG |
| FRA | COMMANDE |
| ITA | ORDINE |
| ESP | PEDIDO |
| POR | PEDIDO |

F0 daN — S mm

CM 600 050

CM 600 050 V1

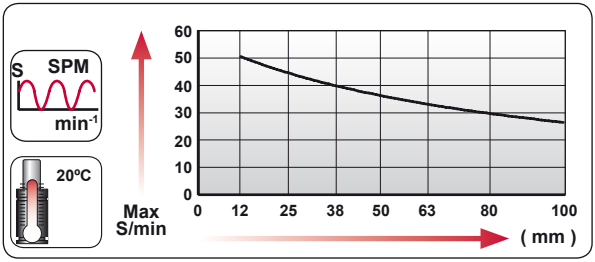


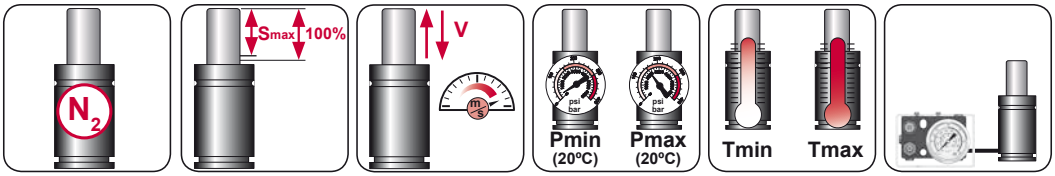


| $N_2$ | Smax < 90% | Vmax 1,6 m/s | bar psi 20 290 | bar psi 150 2175 | ºC ºF 0 32 | ºC ºF 80 176 | 600 CP- |
|---|---|---|---|---|---|---|---|

AZOL GAS

# CM 600 V1 MOUNTS

*Heavy Duty*

## A14-045

ISO | E24.54.815.G EM24.54.700/F

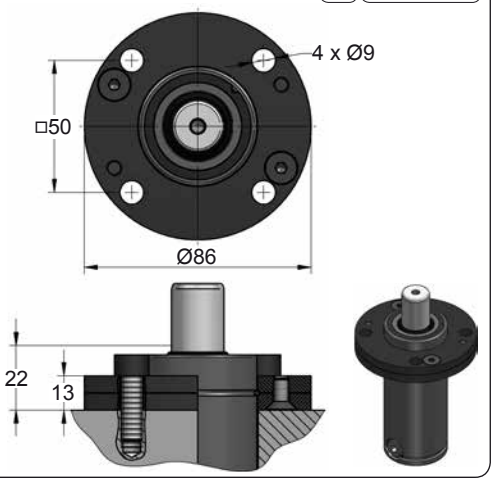


## A34-045

ISO | VDI

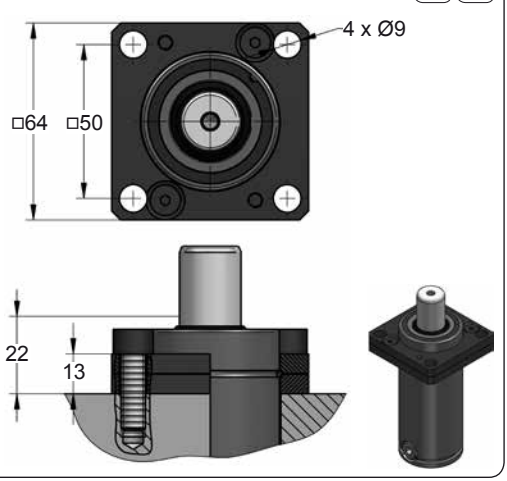


## C20-045

ISO | VDI | E24.54.815.G EM24.54.700/F

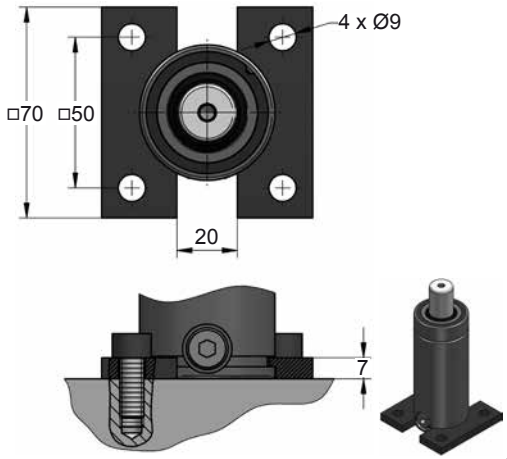


## D67-045

VDI

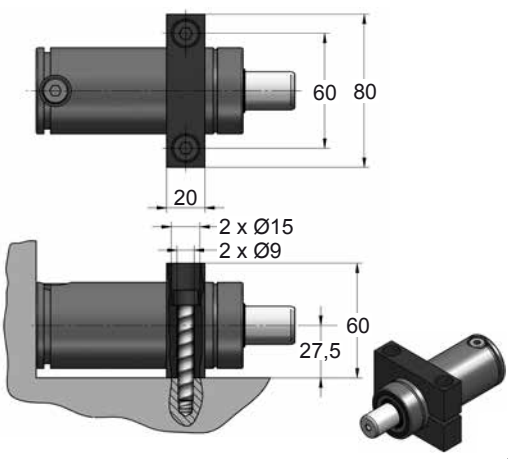









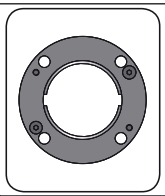

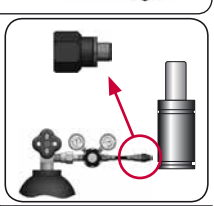

| CODE | | CM 600 050 V1 | KIT XXXXXXX-S<br>KIT XXXXXXX-C | A14-045 | 06 GA 11 |
|---|---|---|---|---|---|
| ENG | ORDER | GAS SPRING | REPAIR KIT | FLANGE | CHARGING ADAPTER |
| DEU | BESTELLUNG | GASDRUCKFEDER | ERSATZTEILSATZ | FLANSCHE | LADEADAPTER |
| FRA | COMMANDE | RESSORT À GAZ | KIT DE RÉPARATION | BRIDE | RACCORD DE CHARGE |
| ITA | ORDINE | CILINDRO AD AZOTO | KIT DI MANUTENZIONE | FLANGE | ADATTATORE DI CARICO |
| ESP | PEDIDO | RESORTE DE GAS | KIT DE REPARACION | BRIDA | ADAPTADOR DE CARGA |
| POR | PEDIDO | CILINDRO DE GÁS | KIT DE MANUTENÇÃO | FLANGE | ADAPTADOR DE CARGA |

# CM 1000 V1

*Heavy Duty*

AZOL GAS

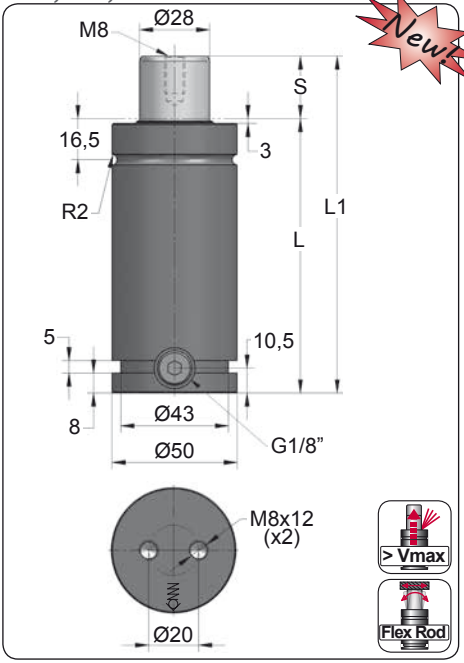


Newt

| ORDER | S (mm) | L1 ±0,25 (mm) | L (mm) | Kg. |
|---|---|---|---|---|
| CM 1000 010 V1 | 10 | 105 | 95 | 1.14 |
| CM 1000 015 V1 | 15 | 115 | 100 | 1.19 |
| CM 1000 025 V1 | 25 | 135 | 110 | 1.30 |
| CM 1000 038 V1 | 38 | 161 | 123 | 1.43 |
| CM 1000 050 V1 | 50 | 185 | 135 | 1.56 |
| CM 1000 063 V1 | 63 | 211 | 148 | 1.69 |
| CM 1000 080 V1 | 80 | 245 | 165 | 1.87 |
| CM 1000 100 V1 | 100 | 295 | 195 | 2.18 |
| CM 1000 125 V1 | 125 | 345 | 220 | 2.44 |
| CM 1000 160 V1 | 160 | 415 | 255 | 2.80 |
| CM 1000 200 V1 | 200 | 495 | 295 | 3.22 |

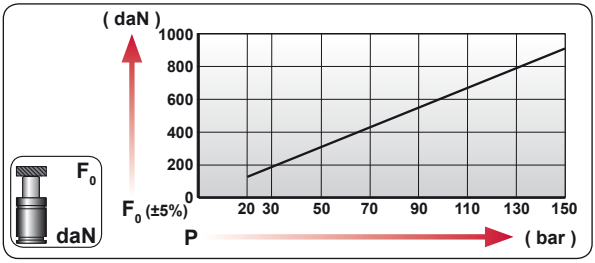


| CODE | bar | psi | $F_0$ daN | $F_1$ daN |
|---|---|---|---|---|
| CM 1000 050 V1 | 160 | 2320 | 985 | 1640 |
| CM-H 1000 050 V1 | 0 | 0 | --- | --- |

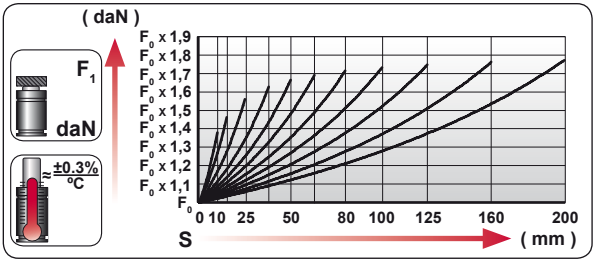


| | |
|---|---|
| ENG | ORDER |
| DEU | BESTELLUNG |
| FRA | COMMANDE |
| ITA | ORDINE |
| ESP | PEDIDO |
| POR | PEDIDO |

$F_0$ daN — S mm

CM 1000 50

CM 1000 050 V1

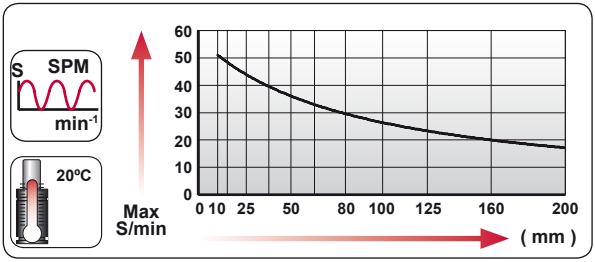


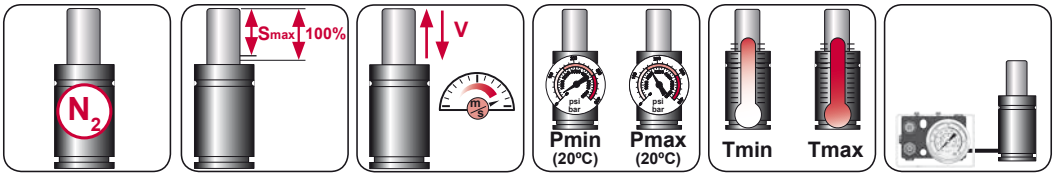


| $N_2$ | Smax < 90% | Vmax 1,6 m/s | bar psi 20 290 | bar psi 160 2320 | °C °F 0 32 | °C °F 80 176 | 600 CP- |
|---|---|---|---|---|---|---|---|

AZOL GAS

# CM 1000 V1 MOUNTS

Heavy Duty

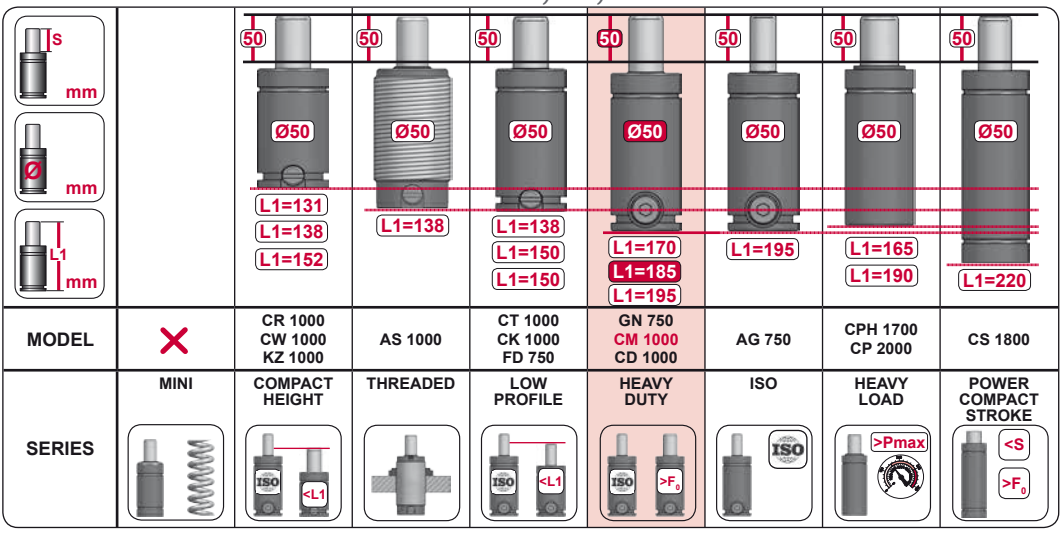


## A14-050

ISO E24.54.815.G EM24.54.700/F

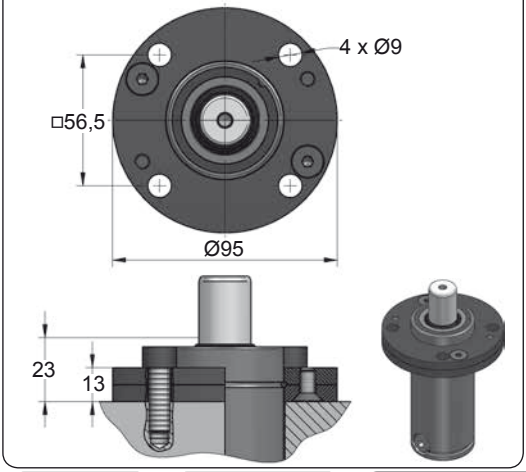


## A34-050

ISO VDI

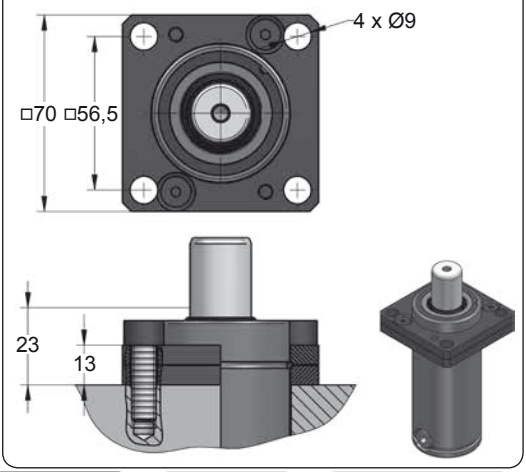









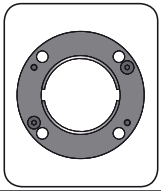

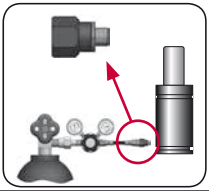

| CODE | | CM 1000 050 V1 | KIT XXXXXXX-S KIT XXXXXXX-C | A14-050 | 18 GA 5 |
|---|---|---|---|---|---|
| ENG | ORDER | GAS SPRING | REPAIR KIT | FLANGE | CHARGING ADAPTER |
| DEU | BESTELLUNG | GASDRUCKFEDER | ERSATZTEILSATZ | FLANSCHE | LADEADAPTER |
| FRA | COMMANDE | RESSORT À GAZ | KIT DE RÉPARATION | BRIDE | RACCORD DE CHARGE |
| ITA | ORDINE | CILINDRO AD AZOTO | KIT DI MANUTENZIONE | FLANGE | ADATTATORE DI CARICO |
| ESP | PEDIDO | RESORTE DE GAS | KIT DE REPARACION | BRIDA | ADAPTADOR DE CARGA |
| POR | PEDIDO | CILINDRO DE GÁS | KIT DE MANUTENÇÃO | FLANGE | ADAPTADOR DE CARGA |

# CM 1000 V1 MOUNTS

*Heavy Duty*

AZOL GAS

## B21-050

EM24.54.700/F

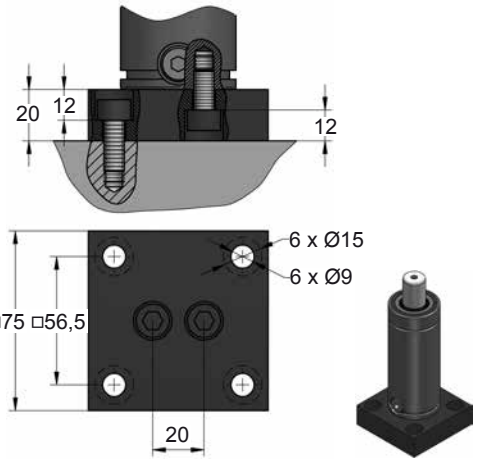


## B76-050

E24.54.815.G
EM24.54.700/F

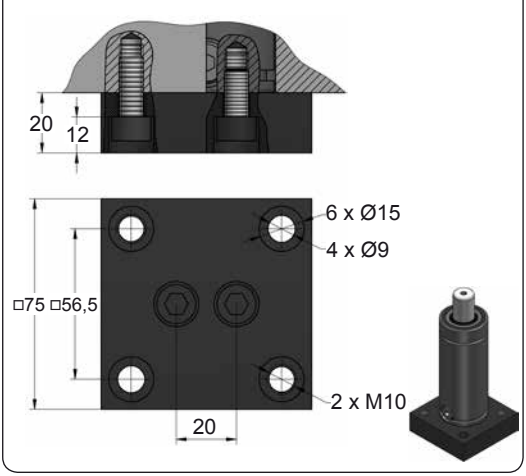


## C05-050

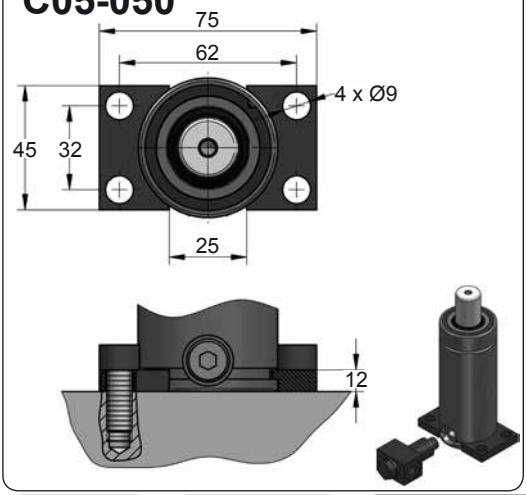


## C20-050

E24.54.815.G
EM24.54.700/F

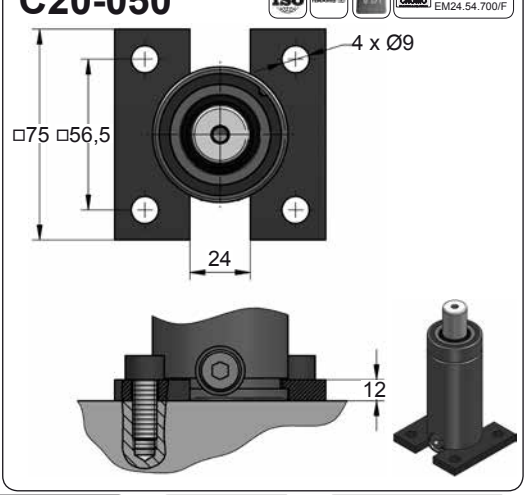









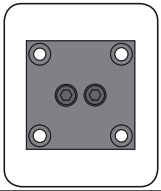

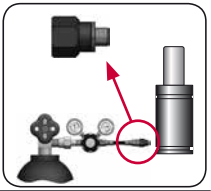

| CODE | | CM 1000 050 V1 | KIT XXXXXXX-S<br>KIT XXXXXXX-C | B21-050 | 18 GA 5 |
|---|---|---|---|---|---|
| ENG | ORDER | GAS SPRING | REPAIR KIT | FLANGE | CHARGING ADAPTER |
| DEU | BESTELLUNG | GASDRUCKFEDER | ERSATZTEILSATZ | FLANSCHE | LADEADAPTER |
| FRA | COMMANDE | RESSORT À GAZ | KIT DE RÉPARATION | BRIDE | RACCORD DE CHARGE |
| ITA | ORDINE | CILINDRO AD AZOTO | KIT DI MANUTENZIONE | FLANGE | ADATTATORE DI CARICO |
| ESP | PEDIDO | RESORTE DE GAS | KIT DE REPARACION | BRIDA | ADAPTADOR DE CARGA |
| POR | PEDIDO | CILINDRO DE GÁS | KIT DE MANUTENÇÃO | FLANGE | ADAPTADOR DE CARGA |

AZOL GAS

# CM 1000 V1 MOUNTS

*Heavy Duty*

## D02-050

ISO E24.54.815.G EM24.54.700/F

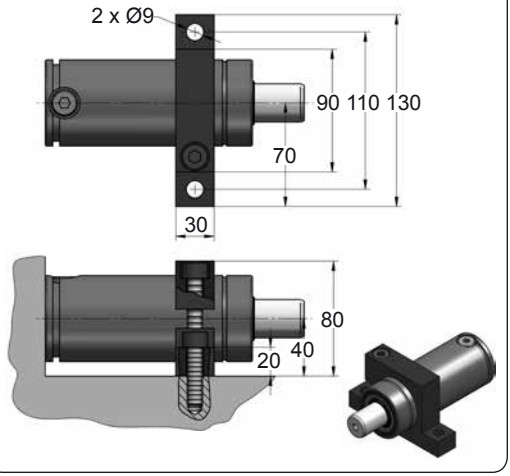


## D67-050

VDI

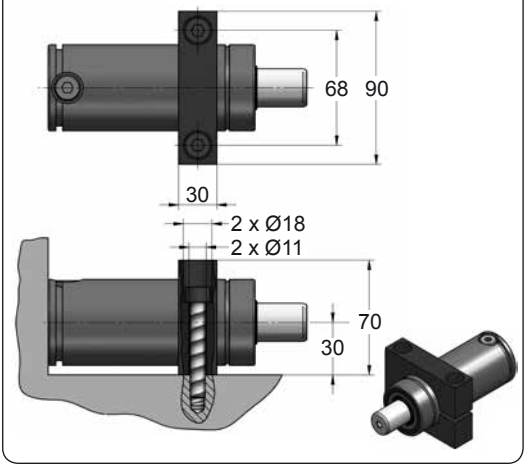









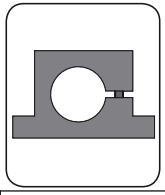

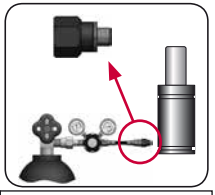

| CODE | | CM 1000 050 V1 | KIT XXXXXXX-S<br>KIT XXXXXXX-C | D02-050 | 18 GA 5 |
|---|---|---|---|---|---|
| ENG | ORDER | GAS SPRING | REPAIR KIT | FLANGE | CHARGING ADAPTER |
| DEU | BESTELLUNG | GASDRUCKFEDER | ERSATZTEILSATZ | FLANSCHE | LADEADAPTER |
| FRA | COMMANDE | RESSORT À GAZ | KIT DE RÉPARATION | BRIDE | RACCORD DE CHARGE |
| ITA | ORDINE | CILINDRO AD AZOTO | KIT DI MANUTENZIONE | FLANGE | ADATTATORE DI CARICO |
| ESP | PEDIDO | RESORTE DE GAS | KIT DE REPARACION | BRIDA | ADAPTADOR DE CARGA |
| POR | PEDIDO | CILINDRO DE GÁS | KIT DE MANUTENÇÃO | FLANGE | ADAPTADOR DE CARGA |

# CM 1500 V1

*Heavy Duty*

AZOL GAS

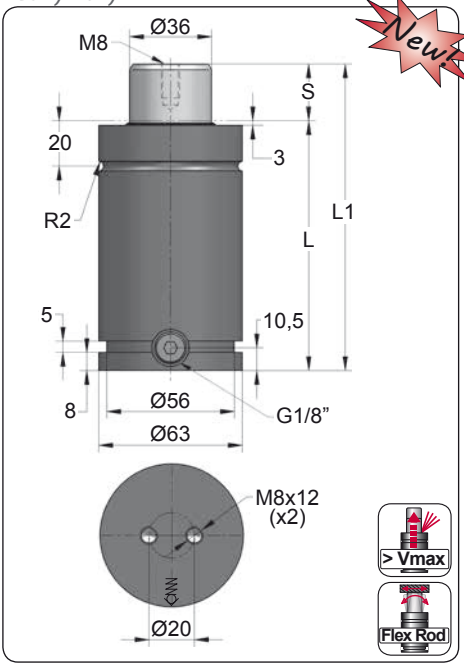


| ORDER | S (mm) | L1 ±0,25 (mm) | L (mm) | Kg. |
|---|---|---|---|---|
| CM 1500 010 V1 | 10 | 105 | 95 | 1.80 |
| CM 1500 025 V1 | 25 | 135 | 110 | 2.04 |
| CM 1500 038 V1 | 38 | 161 | 123 | 2.30 |
| CM 1500 050 V1 | 50 | 185 | 135 | 2.43 |
| CM 1500 063 V1 | 63 | 211 | 148 | 2.64 |
| CM 1500 080 V1 | 80 | 245 | 165 | 2.90 |
| CM 1500 100 V1 | 100 | 285 | 185 | 3.21 |
| CM 1500 125 V1 | 125 | 345 | 220 | 3.68 |
| CM 1500 160 V1 | 160 | 415 | 255 | 4.22 |
| CM 1500 200 V1 | 200 | 495 | 295 | 4.91 |

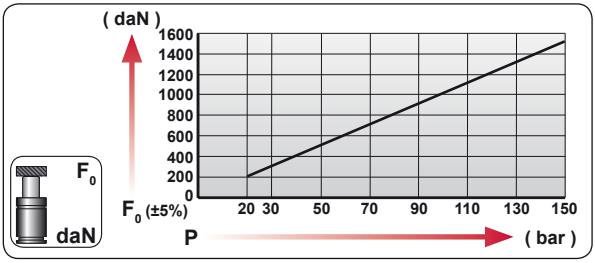


| CODE | bar | psi | F0 daN | F1 daN |
|---|---|---|---|---|
| CM 1500 050 V1 | 150 | 2175 | 1530 | 2730 |
| CM-H 1500 050 V1 | 0 | 0 | --- | --- |

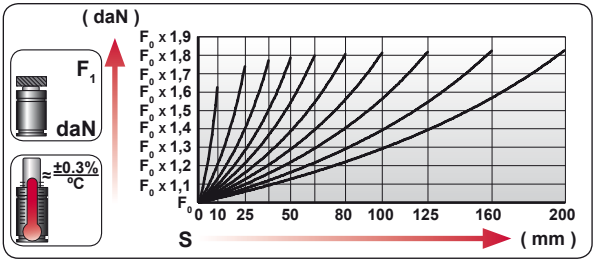


| | |
|---|---|
| ENG | ORDER |
| DEU | BESTELLUNG |
| FRA | COMMANDE |
| ITA | ORDINE |
| ESP | PEDIDO |
| POR | PEDIDO |

F0 daN — S mm

CM 1500 50

CM 1500 050 V1

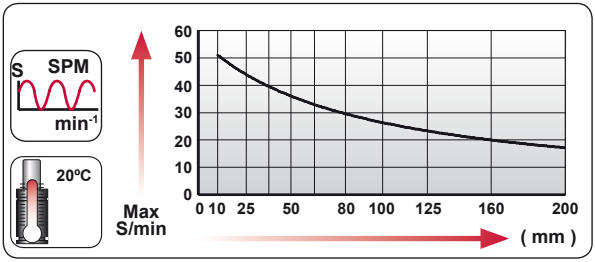


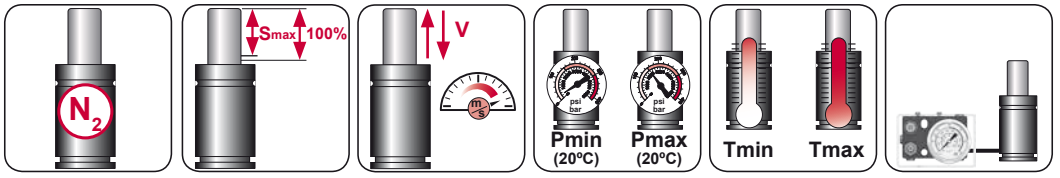


| $N_2$ | Smax < 90% | Vmax 1,6 m/s | bar psi 20 290 | bar psi 150 2175 | ºC ºF 0 32 | ºC ºF 80 176 | 600 CP- |
|---|---|---|---|---|---|---|---|

AZOL GAS

# CM 1500 V1 MOUNTS

*Heavy Duty*

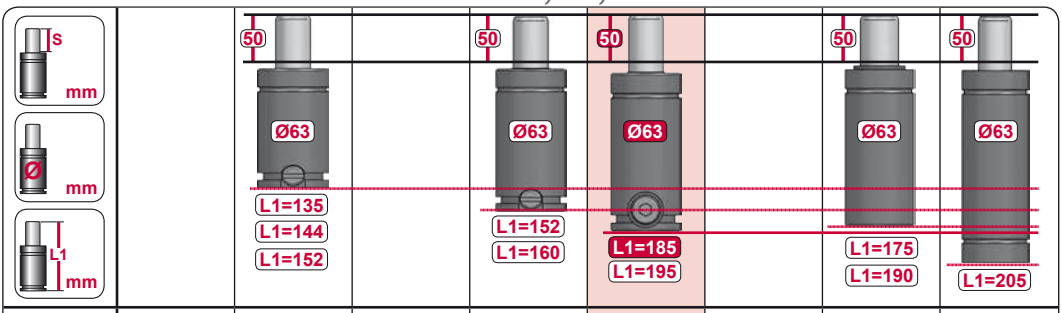


| MODEL | | CR 1500 CW 1500 KZ 1500 | | CT 1500 CK 1500 | CM 1500 CD 1500 | | CPH 2800 CP 3000 | CS 3000 |
|---|---|---|---|---|---|---|---|---|
| SERIES | MINI | COMPACT HEIGHT | THREADED | LOW PROFILE | HEAVY DUTY | ISO | HEAVY LOAD | POWER COMPACT STROKE |

## A14-063

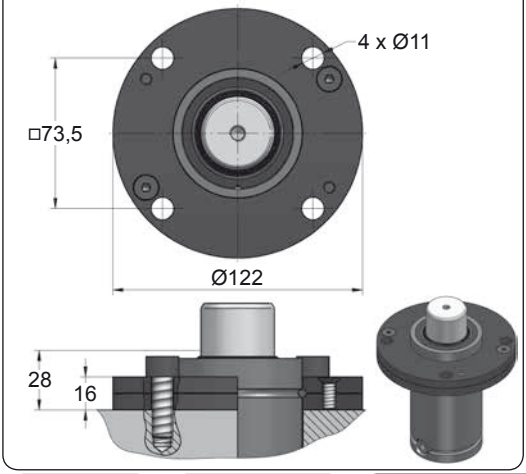


## A39-063

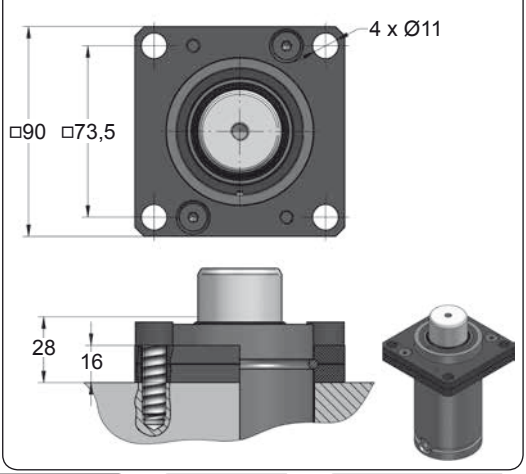









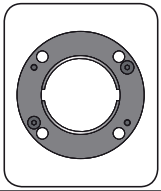

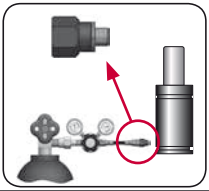

| CODE | | CM 1500 050 V1 | KIT XXXXXXX-S KIT XXXXXXX-C | A14-063 | 18 GA 5 |
|---|---|---|---|---|---|
| ENG | ORDER | GAS SPRING | REPAIR KIT | FLANGE | CHARGING ADAPTER |
| DEU | BESTELLUNG | GASDRUCKFEDER | ERSATZTEILSATZ | FLANSCHE | LADEADAPTER |
| FRA | COMMANDE | RESSORT À GAZ | KIT DE RÉPARATION | BRIDE | RACCORD DE CHARGE |
| ITA | ORDINE | CILINDRO AD AZOTO | KIT DI MANUTENZIONE | FLANGE | ADATTATORE DI CARICO |
| ESP | PEDIDO | RESORTE DE GAS | KIT DE REPARACION | BRIDA | ADAPTADOR DE CARGA |
| POR | PEDIDO | CILINDRO DE GÁS | KIT DE MANUTENÇÃO | FLANGE | ADAPTADOR DE CARGA |

# CM 1500 V1 MOUNTS

*Heavy Duty*

AZOL GAS

## A69-063

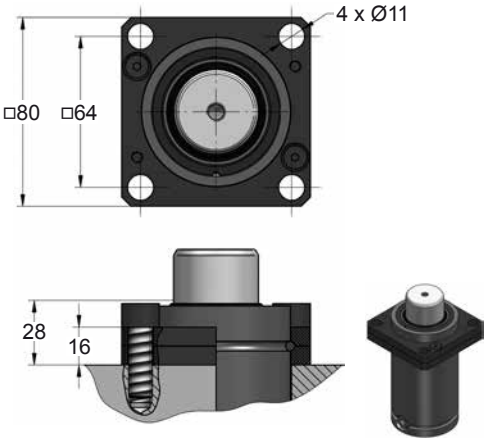


## C05-063

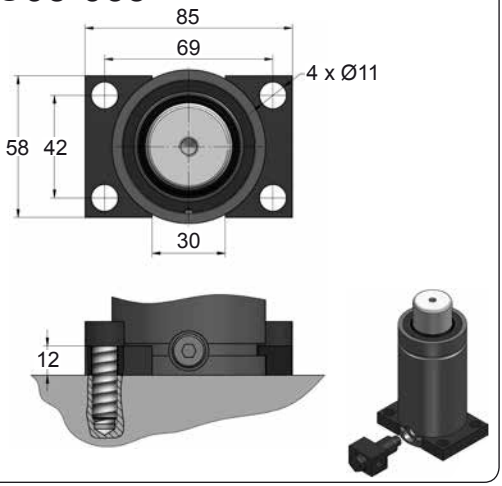


## C30-063

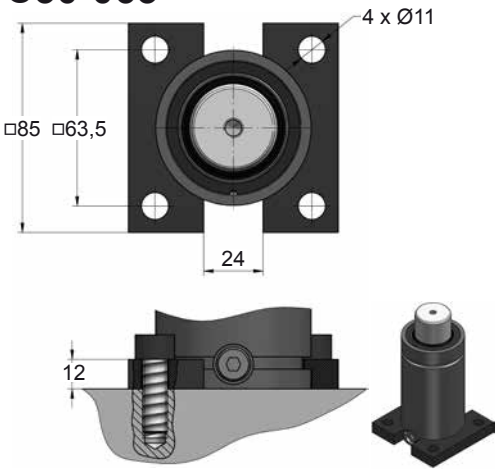


## C35-063

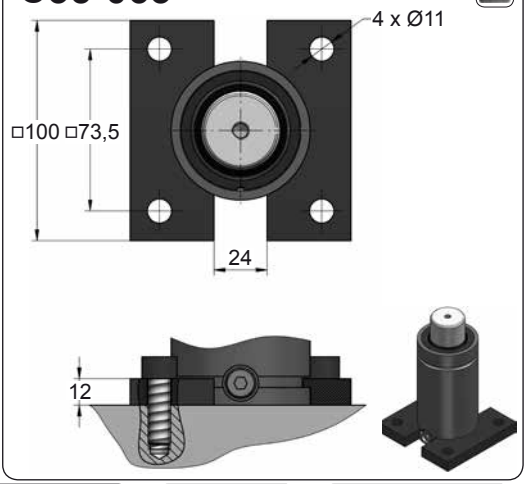









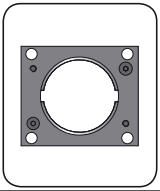

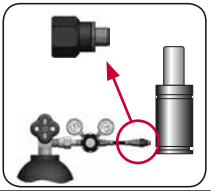

| CODE | | CM 1500 050 V1 | KIT XXXXXXX-S<br>KIT XXXXXXX-C | A69-063 | 18 GA 5 |
|---|---|---|---|---|---|
| ENG | ORDER | GAS SPRING | REPAIR KIT | FLANGE | CHARGING ADAPTER |
| DEU | BESTELLUNG | GASDRUCKFEDER | ERSATZTEILSATZ | FLANSCHE | LADEADAPTER |
| FRA | COMMANDE | RESSORT À GAZ | KIT DE RÉPARATION | BRIDE | RACCORD DE CHARGE |
| ITA | ORDINE | CILINDRO AD AZOTO | KIT DI MANUTENZIONE | FLANGE | ADATTATORE DI CARICO |
| ESP | PEDIDO | RESORTE DE GAS | KIT DE REPARACION | BRIDA | ADAPTADOR DE CARGA |
| POR | PEDIDO | CILINDRO DE GÁS | KIT DE MANUTENÇÃO | FLANGE | ADAPTADOR DE CARGA |

AZOL GAS

# CM 1500 V1 MOUNTS

*Heavy Duty*

## D02-063

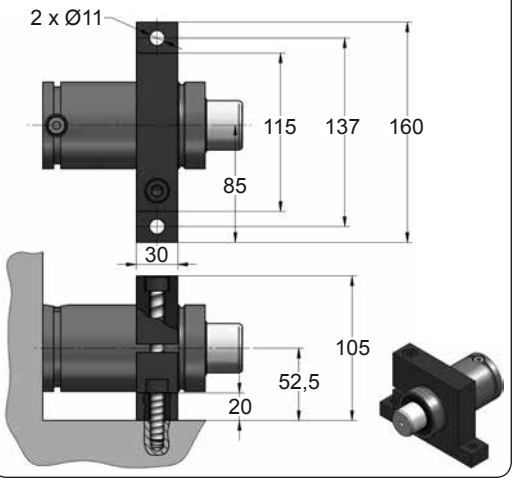


## D67-063

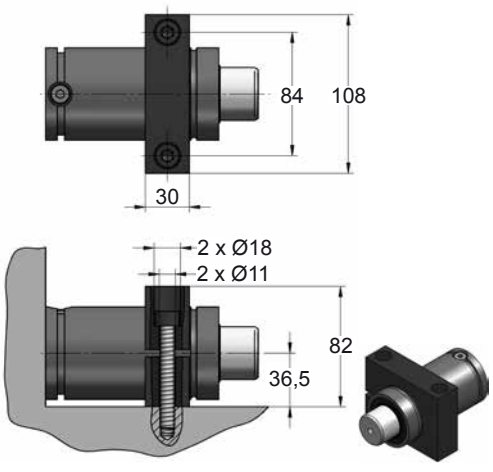









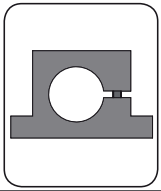

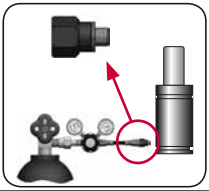

| CODE | | CM 1500 050 V1 | KIT XXXXXXX-S<br>KIT XXXXXXX-C | D02-063 | 18 GA 5 |
|---|---|---|---|---|---|
| ENG | ORDER | GAS SPRING | REPAIR KIT | FLANGE | CHARGING ADAPTER |
| DEU | BESTELLUNG | GASDRUCKFEDER | ERSATZTEILSATZ | FLANSCHE | LADEADAPTER |
| FRA | COMMANDE | RESSORT À GAZ | KIT DE RÉPARATION | BRIDE | RACCORD DE CHARGE |
| ITA | ORDINE | CILINDRO AD AZOTO | KIT DI MANUTENZIONE | FLANGE | ADATTATORE DI CARICO |
| ESP | PEDIDO | RESORTE DE GAS | KIT DE REPARACION | BRIDA | ADAPTADOR DE CARGA |
| POR | PEDIDO | CILINDRO DE GÁS | KIT DE MANUTENÇÃO | FLANGE | ADAPTADOR DE CARGA |

# CM 2500 V1

*Heavy Duty*

AZOL GAS

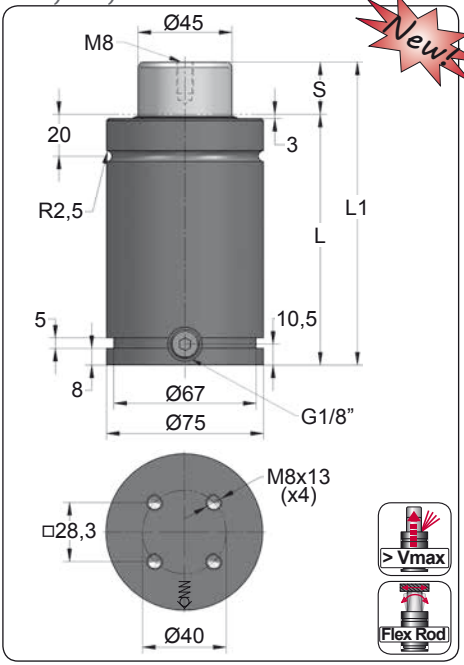


Newt

| ORDER | S (mm) | L1 ±0,25 (mm) | L (mm) | Kg. |
|---|---|---|---|---|
| CM 2500 010 V1 | 10 | 115 | 105 | 2.65 |
| CM 2500 025 V1 | 25 | 145 | 120 | 3.00 |
| CM 2500 038 V1 | 38 | 171 | 133 | 3.35 |
| CM 2500 050 V1 | 50 | 195 | 145 | 3.54 |
| CM 2500 063 V1 | 63 | 221 | 158 | 3.84 |
| CM 2500 080 V1 | 80 | 255 | 175 | 4.35 |
| CM 2500 100 V1 | 100 | 300 | 200 | 4.71 |
| CM 2500 125 V1 | 125 | 350 | 225 | 5.28 |
| CM 2500 160 V1 | 160 | 425 | 265 | 6.07 |
| CM 2500 200 V1 | 200 | 510 | 310 | 7.04 |

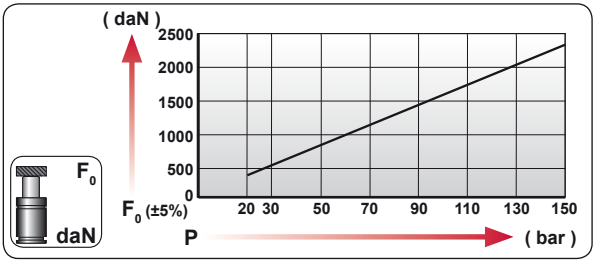


| CODE | bar | psi | F0 daN | F1 daN |
|---|---|---|---|---|
| CM 2500 050 V1 | 155 | 2450 | 2465 | 4250 |
| CM-H 2500 050 V1 | 0 | 0 | --- | --- |

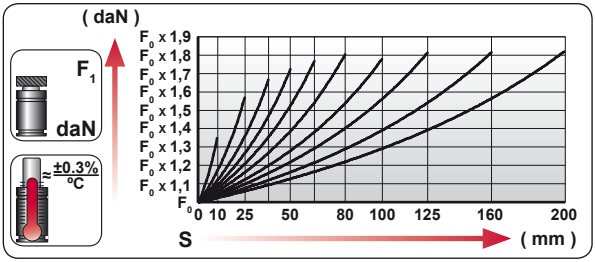


| | |
|---|---|
| ENG | ORDER |
| DEU | BESTELLUNG |
| FRA | COMMANDE |
| ITA | ORDINE |
| ESP | PEDIDO |
| POR | PEDIDO |

F0 daN — S mm

CM 2500 50

CM 2500 050 V1

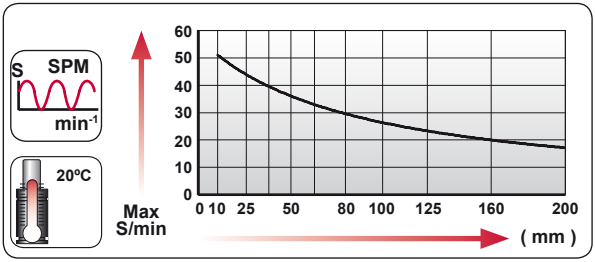


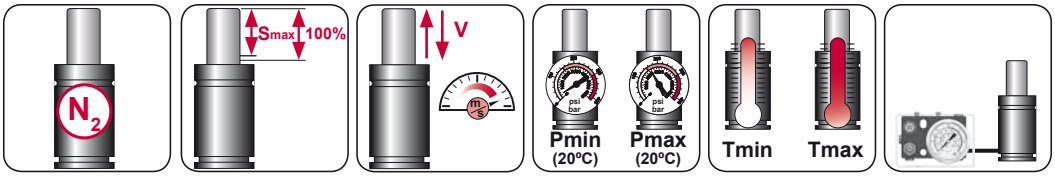


| $N_2$ | Smax < 90% | Vmax 1,6 m/s | bar psi 20 290 | bar psi 160 2320 | ºC ºF 0 32 | ºC ºF 80 176 | 600 CP- |
|---|---|---|---|---|---|---|---|

AZOL GAS

# CM 2500 V1 *MOUNTS*

*Heavy Duty*

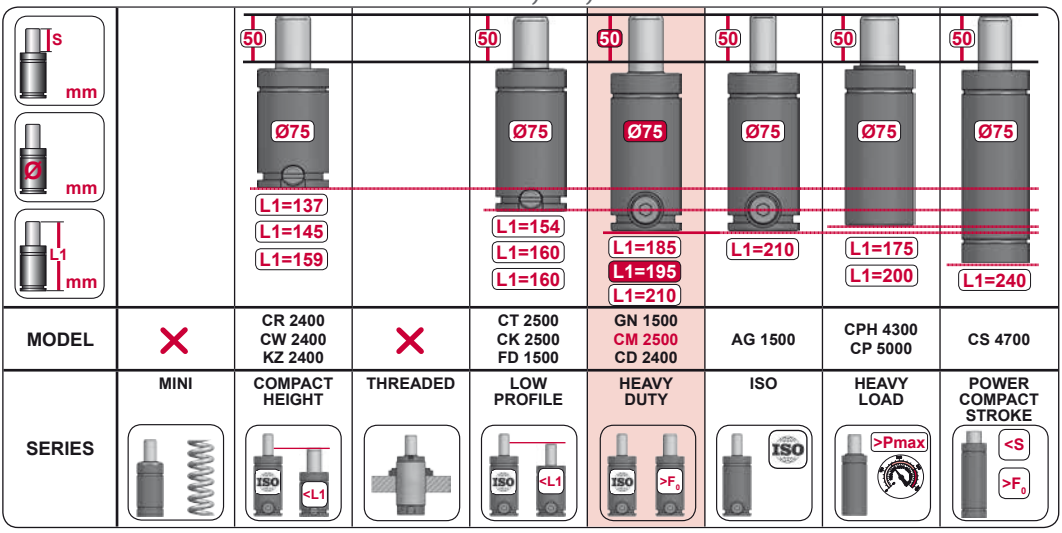


| MODEL | | CR 2400 CW 2400 KZ 2400 | | CT 2500 CK 2500 FD 1500 | GN 1500 CM 2500 CD 2400 | AG 1500 | CPH 4300 CP 5000 | CS 4700 |
|---|---|---|---|---|---|---|---|---|
| SERIES | MINI | COMPACT HEIGHT | THREADED | LOW PROFILE | HEAVY DUTY | ISO | HEAVY LOAD | POWER COMPACT STROKE |

## A14-075

ISO E24.54.815.G EM24.54.700/F

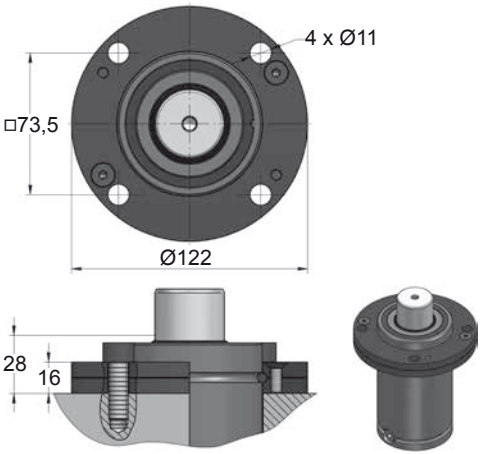


## A34-075

ISO VDI

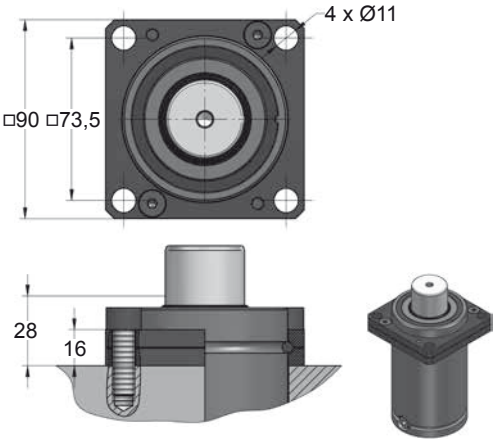









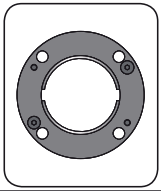

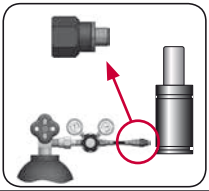

| CODE | | CM 2500 050 V1 | KIT XXXXXXX-S KIT XXXXXXX-C | A14-075 | 18 GA 5 |
|---|---|---|---|---|---|
| ENG | ORDER | GAS SPRING | REPAIR KIT | FLANGE | CHARGING ADAPTER |
| DEU | BESTELLUNG | GASDRUCKFEDER | ERSATZTEILSATZ | FLANSCHE | LADEADAPTER |
| FRA | COMMANDE | RESSORT À GAZ | KIT DE RÉPARATION | BRIDE | RACCORD DE CHARGE |
| ITA | ORDINE | CILINDRO AD AZOTO | KIT DI MANUTENZIONE | FLANGE | ADATTATORE DI CARICO |
| ESP | PEDIDO | RESORTE DE GAS | KIT DE REPARACION | BRIDA | ADAPTADOR DE CARGA |
| POR | PEDIDO | CILINDRO DE GÁS | KIT DE MANUTENÇÃO | FLANGE | ADAPTADOR DE CARGA |

# CM 2500 V1 MOUNTS

*Heavy Duty*

AZOL GAS

## B21-075

EM24.54.700/F

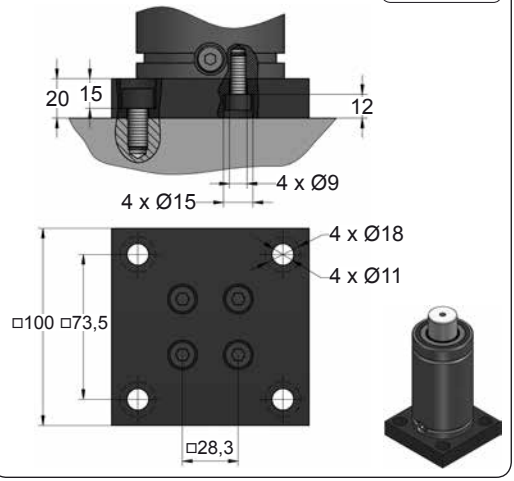


## B76-075

ISO

E24.54.815.G
EM24.54.700/F

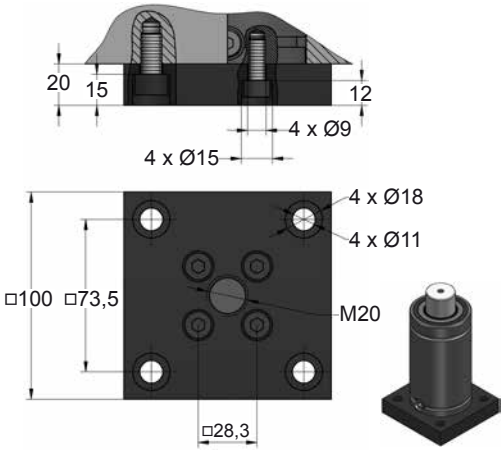


## C05-075

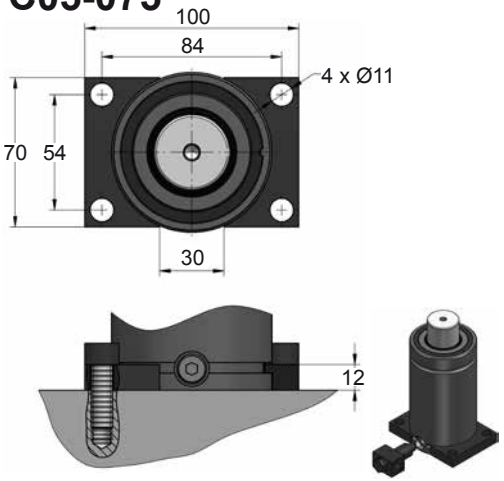


## C20-075

ISO
VDI

E24.54.815.G
EM24.54.700/F

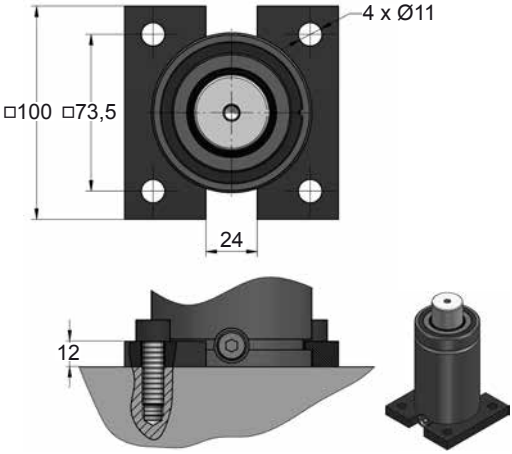




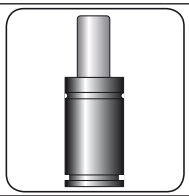




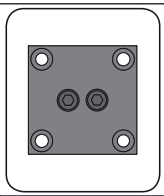

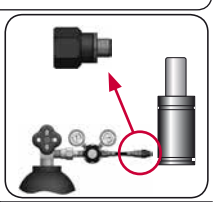

| CODE | | CM 2500 050 V1 | KIT XXXXXXX-S<br>KIT XXXXXXX-C | B21-075 | 18 GA 5 |
|---|---|---|---|---|---|
| ENG | ORDER | GAS SPRING | REPAIR KIT | FLANGE | CHARGING ADAPTER |
| DEU | BESTELLUNG | GASDRUCKFEDER | ERSATZTEILSATZ | FLANSCHE | LADEADAPTER |
| FRA | COMMANDE | RESSORT À GAZ | KIT DE RÉPARATION | BRIDE | RACCORD DE CHARGE |
| ITA | ORDINE | CILINDRO AD AZOTO | KIT DI MANUTENZIONE | FLANGE | ADATTATORE DI CARICO |
| ESP | PEDIDO | RESORTE DE GAS | KIT DE REPARACION | BRIDA | ADAPTADOR DE CARGA |
| POR | PEDIDO | CILINDRO DE GÁS | KIT DE MANUTENÇÃO | FLANGE | ADAPTADOR DE CARGA |

AZOL GAS

# CM 2500 V1 MOUNTS

*Heavy Duty*

## D02-075

ISO E24.54.815.G EM24.54.700/F

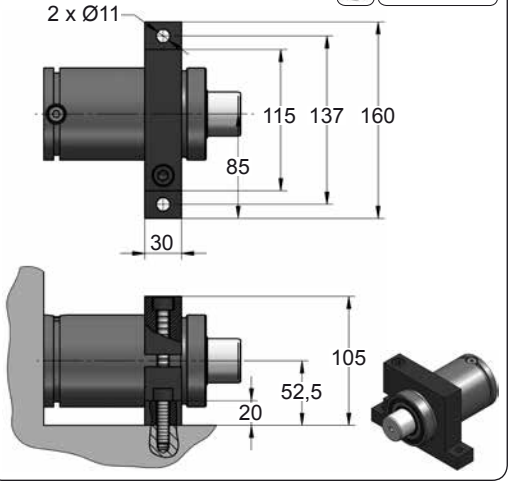


## D67-075

VDI

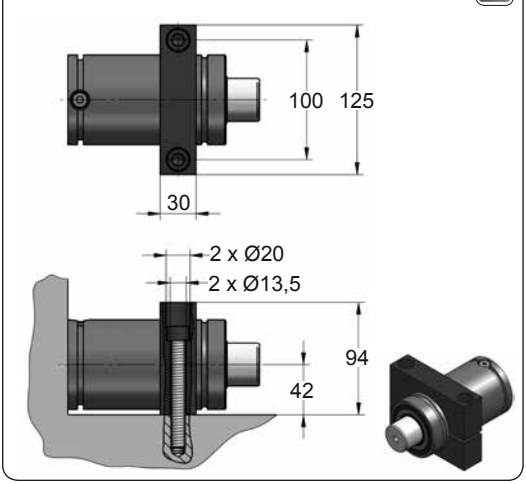









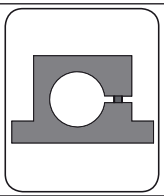

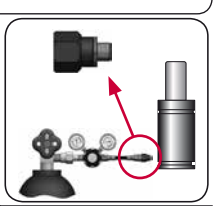

| CODE | | CM 2500 050 V1 | KIT XXXXXXX-S<br>KIT XXXXXXX-C | D02-075 | 18 GA 5 |
|---|---|---|---|---|---|
| ENG | ORDER | GAS SPRING | REPAIR KIT | FLANGE | CHARGING ADAPTER |
| DEU | BESTELLUNG | GASDRUCKFEDER | ERSATZTEILSATZ | FLANSCHE | LADEADAPTER |
| FRA | COMMANDE | RESSORT À GAZ | KIT DE RÉPARATION | BRIDE | RACCORD DE CHARGE |
| ITA | ORDINE | CILINDRO AD AZOTO | KIT DI MANUTENZIONE | FLANGE | ADATTATORE DI CARICO |
| ESP | PEDIDO | RESORTE DE GAS | KIT DE REPARACION | BRIDA | ADAPTADOR DE CARGA |
| POR | PEDIDO | CILINDRO DE GÁS | KIT DE MANUTENÇÃO | FLANGE | ADAPTADOR DE CARGA |

# CM 4000 V1

*Heavy Duty*

AZOL GAS

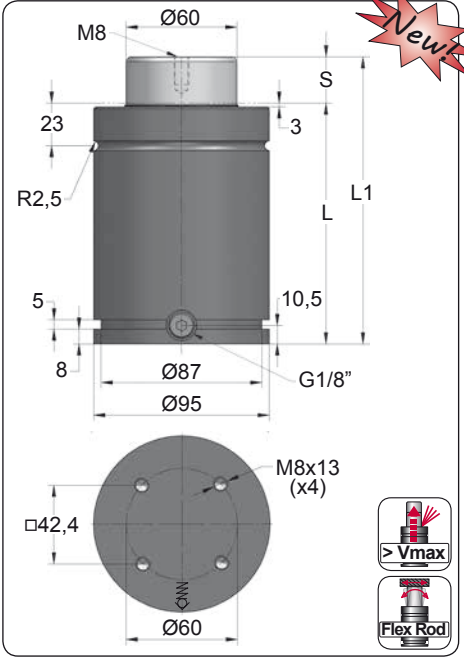


Newt

| ORDER | S (mm) | L1 ±0,25 (mm) | L (mm) | Kg. |
|---|---|---|---|---|
| CM 4000 025 V1 | 25 | 155 | 130 | 5.58 |
| CM 4000 038 V1 | 38 | 181 | 143 | 6.09 |
| CM 4000 050 V1 | 50 | 205 | 155 | 6.50 |
| CM 4000 063 V1 | 63 | 236 | 173 | 7.07 |
| CM 4000 080 V1 | 80 | 270 | 190 | 7.62 |
| CM 4000 100 V1 | 100 | 310 | 210 | 8.34 |
| CM 4000 125 V1 | 125 | 370 | 245 | 9.46 |
| CM 4000 160 V1 | 160 | 440 | 280 | 10.00 |
| CM 4000 200 V1 | 200 | 530 | 330 | 10.40 |

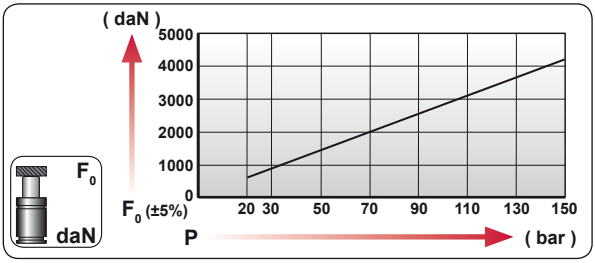


| CODE | bar | psi | F0 daN | F1 daN |
|---|---|---|---|---|
| CM 4000 050 V1 | 140 | 2030 | 3960 | 7660 |
| CM-H 4000 050 V1 | 0 | 0 | --- | --- |

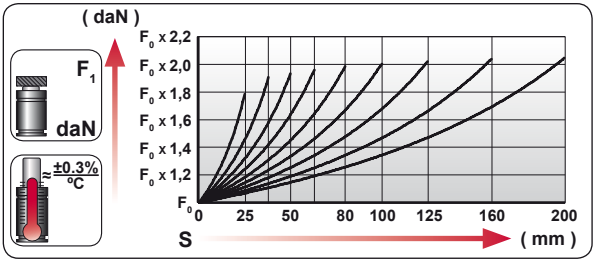


| | ENG | ORDER |
|---|---|---|
| | DEU | BESTELLUNG |
| | FRA | COMMANDE |
| | ITA | ORDINE |
| | ESP | PEDIDO |
| | POR | PEDIDO |

F0 daN — S mm

CM 4000 50

CM 4000 050 V1

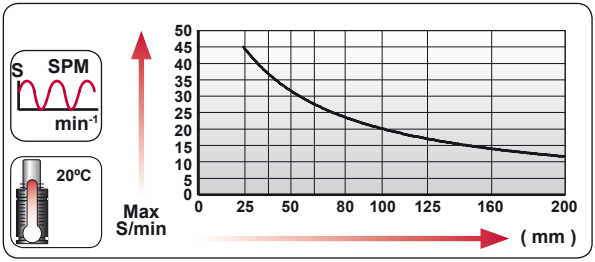


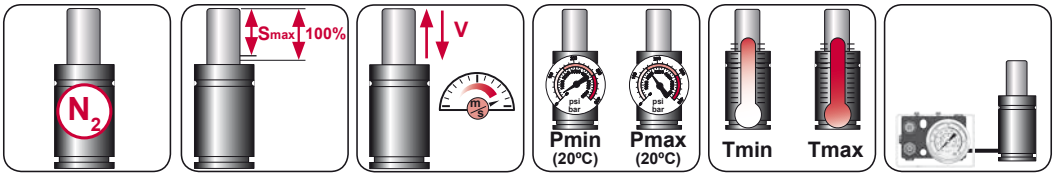


| $N_2$ | Smax < 90% | Vmax 1,6 m/s | bar psi 20 290 | bar psi 150 2175 | °C °F 0 32 | °C °F 80 176 | 600 CP- |
|---|---|---|---|---|---|---|---|

AZOL GAS

# CM 4000 V1 MOUNTS

*Heavy Duty*

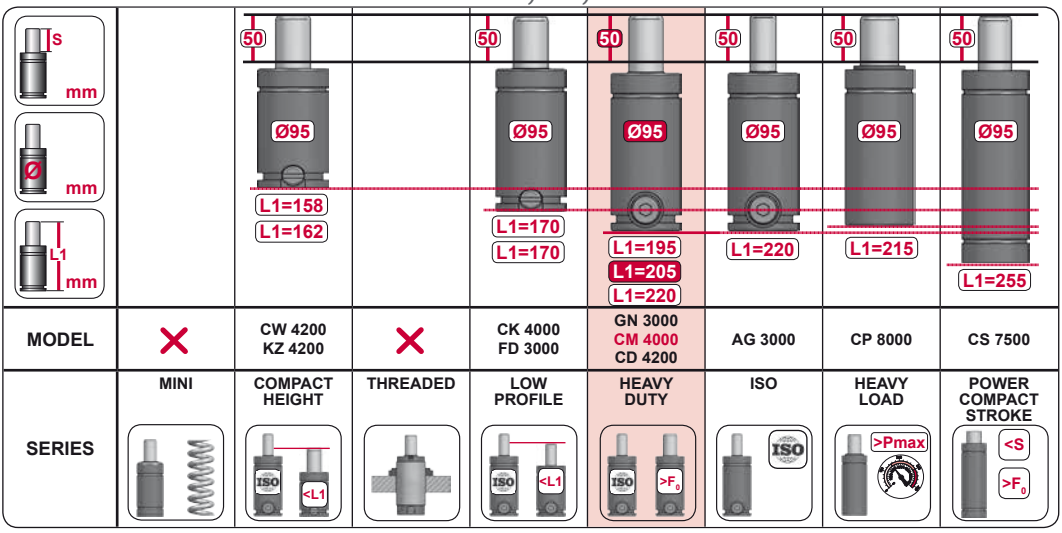


| MODEL | | CW 4200 KZ 4200 | | CK 4000 FD 3000 | GN 3000 CM 4000 CD 4200 | AG 3000 | CP 8000 | CS 7500 |
|---|---|---|---|---|---|---|---|---|
| SERIES | MINI | COMPACT HEIGHT | THREADED | LOW PROFILE | HEAVY DUTY | ISO | HEAVY LOAD | POWER COMPACT STROKE |

## A14-095

ISO E24.54.815.G EM24.54.700/F

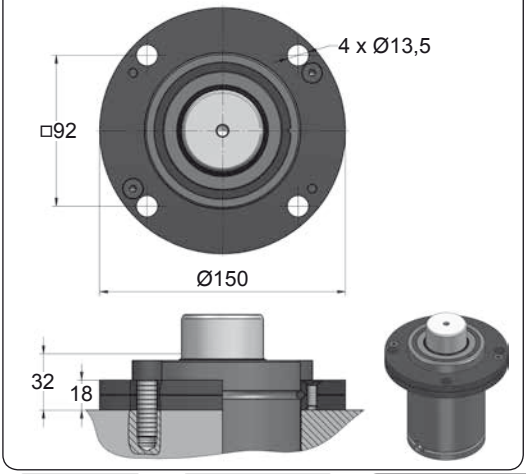


## A34-095

ISO VDI

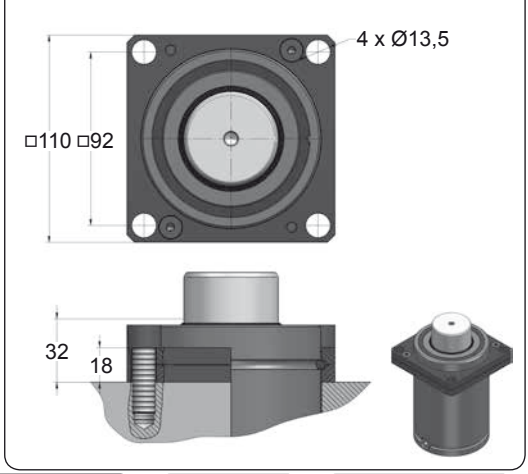









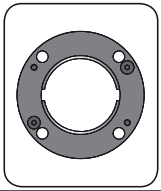

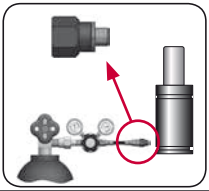

| CODE | | CM 4000 050 V1 | KIT XXXXXXX-S KIT XXXXXXX-C | A14-095 | 18 GA 5 |
|---|---|---|---|---|---|
| ENG | ORDER | GAS SPRING | REPAIR KIT | FLANGE | CHARGING ADAPTER |
| DEU | BESTELLUNG | GASDRUCKFEDER | ERSATZTEILSATZ | FLANSCHE | LADEADAPTER |
| FRA | COMMANDE | RESSORT À GAZ | KIT DE RÉPARATION | BRIDE | RACCORD DE CHARGE |
| ITA | ORDINE | CILINDRO AD AZOTO | KIT DI MANUTENZIONE | FLANGE | ADATTATORE DI CARICO |
| ESP | PEDIDO | RESORTE DE GAS | KIT DE REPARACION | BRIDA | ADAPTADOR DE CARGA |
| POR | PEDIDO | CILINDRO DE GÁS | KIT DE MANUTENÇÃO | FLANGE | ADAPTADOR DE CARGA |

# CM 4000 V1 MOUNTS

*Heavy Duty*

AZOL GAS

## B21-095

EM24.54.700/F

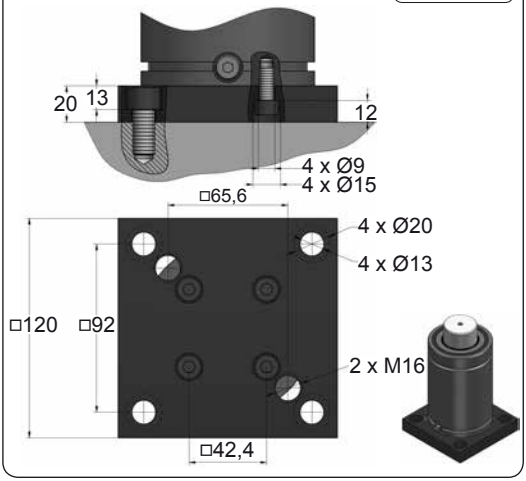


## B76-095

ISO NAAMS EM24.54.700/F

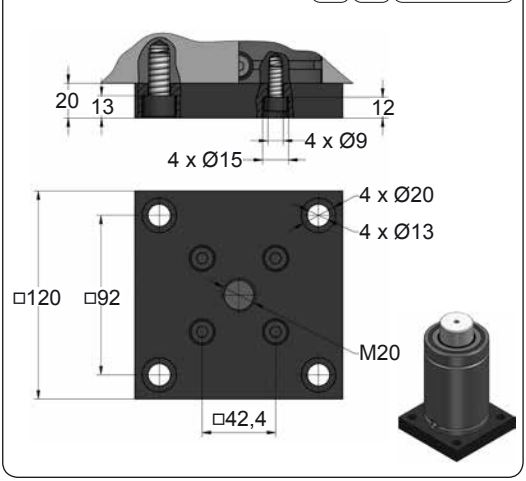


## C05-095

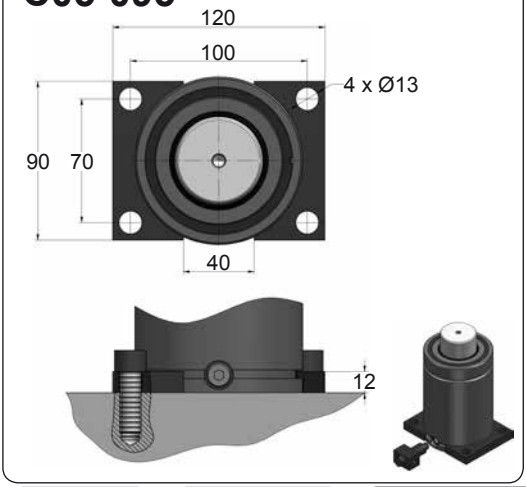


## C20-095

ISO NAAMS VDI E24.54.815.G EM24.54.700/F

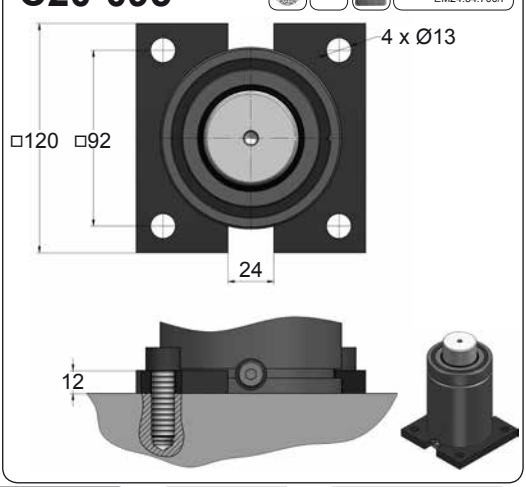









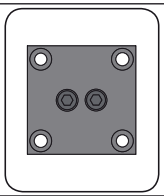

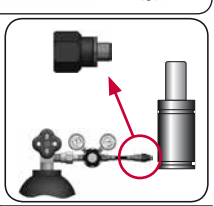

| CODE | | CM 4000 050 V1 | KIT XXXXXXX-S<br>KIT XXXXXXX-C | B21-095 | 18 GA 5 |
|---|---|---|---|---|---|
| ENG | ORDER | GAS SPRING | REPAIR KIT | FLANGE | CHARGING ADAPTER |
| DEU | BESTELLUNG | GASDRUCKFEDER | ERSATZTEILSATZ | FLANSCHE | LADEADAPTER |
| FRA | COMMANDE | RESSORT À GAZ | KIT DE RÉPARATION | BRIDE | RACCORD DE CHARGE |
| ITA | ORDINE | CILINDRO AD AZOTO | KIT DI MANUTENZIONE | FLANGE | ADATTATORE DI CARICO |
| ESP | PEDIDO | RESORTE DE GAS | KIT DE REPARACION | BRIDA | ADAPTADOR DE CARGA |
| POR | PEDIDO | CILINDRO DE GÁS | KIT DE MANUTENÇÃO | FLANGE | ADAPTADOR DE CARGA |

AZOL GAS

# CM 4000 V1 MOUNTS

Heavy Duty

## D02-095

ISO E24.54.815.G EM24.54.700/F

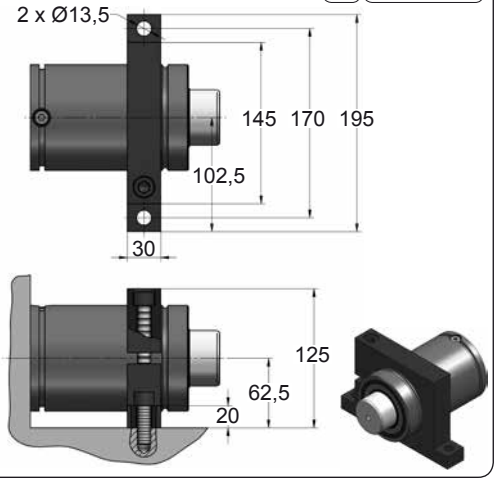


## D67-095

VDI

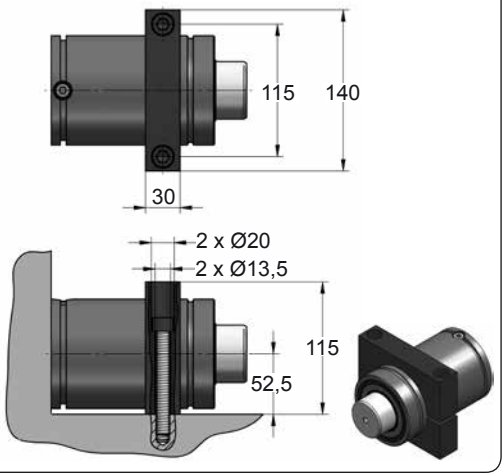









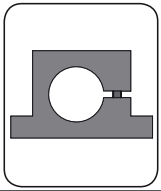

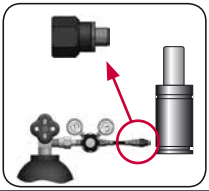

| CODE | | CM 4000 050 V1 | KIT XXXXXXX-S KIT XXXXXXX-C | D02-095 | 18 GA 5 |
|---|---|---|---|---|---|
| ENG | ORDER | GAS SPRING | REPAIR KIT | FLANGE | CHARGING ADAPTER |
| DEU | BESTELLUNG | GASDRUCKFEDER | ERSATZTEILSATZ | FLANSCHE | LADEADAPTER |
| FRA | COMMANDE | RESSORT À GAZ | KIT DE RÉPARATION | BRIDE | RACCORD DE CHARGE |
| ITA | ORDINE | CILINDRO AD AZOTO | KIT DI MANUTENZIONE | FLANGE | ADATTATORE DI CARICO |
| ESP | PEDIDO | RESORTE DE GAS | KIT DE REPARACION | BRIDA | ADAPTADOR DE CARGA |
| POR | PEDIDO | CILINDRO DE GÁS | KIT DE MANUTENÇÃO | FLANGE | ADAPTADOR DE CARGA |

# CM 6500 V1

*Heavy Duty*

AZOL GAS

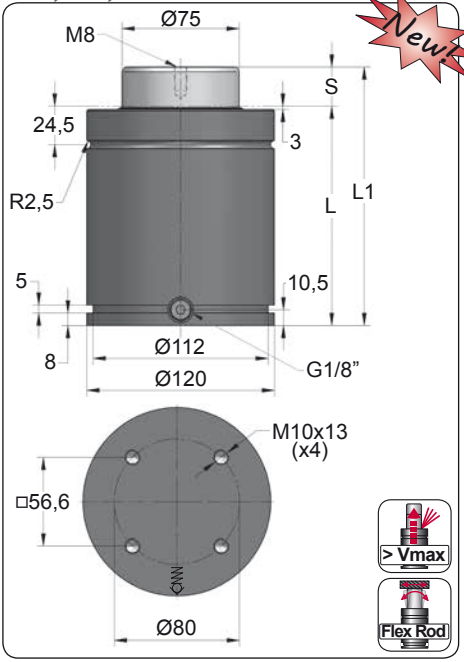


New!

| ORDER | S (mm) | L1 ±0,25 (mm) | L (mm) | Kg. |
|---|---|---|---|---|
| CM 6500 025 V1 | 25 | 165 | 140 | 10.07 |
| CM 6500 038 V1 | 38 | 191 | 153 | 10.78 |
| CM 6500 050 V1 | 50 | 215 | 165 | 11.43 |
| CM 6500 063 V1 | 63 | 241 | 178 | 12.13 |
| CM 6500 080 V1 | 80 | 275 | 195 | 13.05 |
| CM 6500 100 V1 | 100 | 315 | 215 | 14.14 |
| CM 6500 125 V1 | 125 | 375 | 250 | 15.77 |
| CM 6500 160 V1 | 160 | 450 | 290 | 17.80 |
| CM 6500 200 V1 | 200 | 540 | 340 | 20.24 |

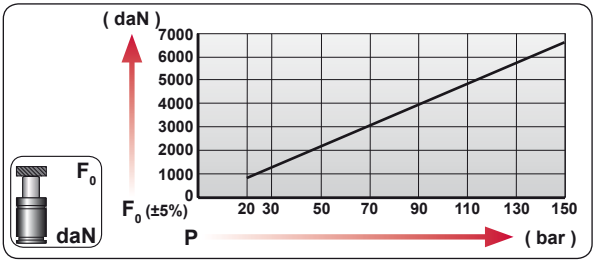


| CODE | bar | psi | $F_0$ daN | $F_1$ daN |
|---|---|---|---|---|
| CM 6500 050 V1 | 145 | 2105 | 6405 | 11950 |
| CM-H 6500 050 V1 | 0 | 0 | --- | --- |

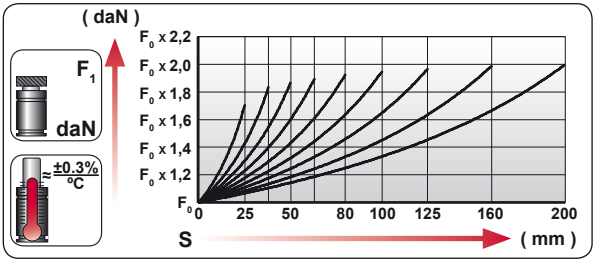


| | |
|---|---|
| ENG | ORDER |
| DEU | BESTELLUNG |
| FRA | COMMANDE |
| ITA | ORDINE |
| ESP | PEDIDO |
| POR | PEDIDO |

$F_0$ daN — S mm

CM 6500 50

CM 6500 050 V1

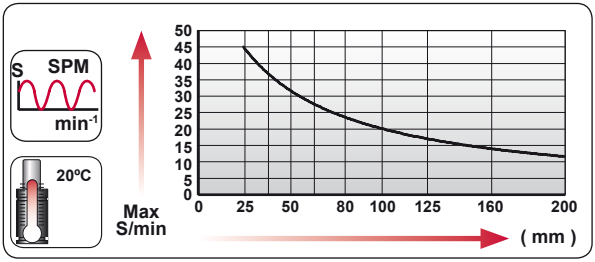


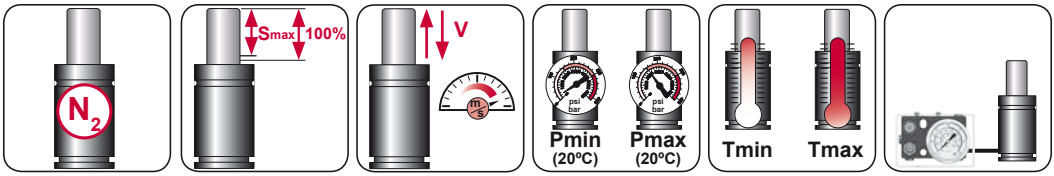


| $N_2$ | Smax < 90% | Vmax 1,6 m/s | bar psi 20 290 | bar psi 150 2175 | °C °F 0 32 | °C °F 80 176 | 600 CP- |
|---|---|---|---|---|---|---|---|

AZOL GAS

# CM 6500 V1 MOUNTS

*Heavy Duty*

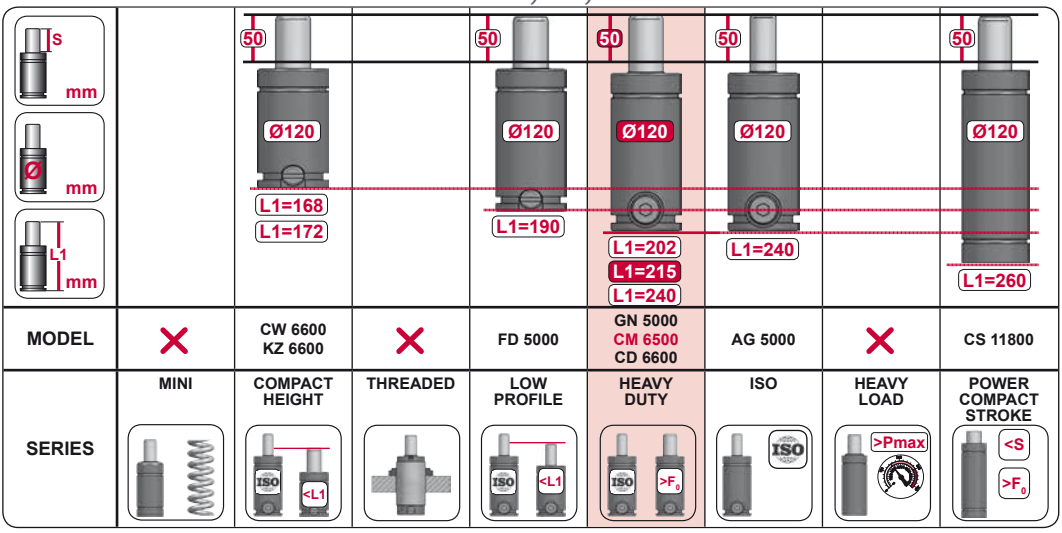


| MODEL | | CW 6600 KZ 6600 | | FD 5000 | GN 5000 CM 6500 CD 6600 | AG 5000 | | CS 11800 |
|---|---|---|---|---|---|---|---|---|
| SERIES | MINI | COMPACT HEIGHT | THREADED | LOW PROFILE | HEAVY DUTY | ISO | HEAVY LOAD | POWER COMPACT STROKE |

## A14-120

E24.54.815.G
EM24.54.700/F

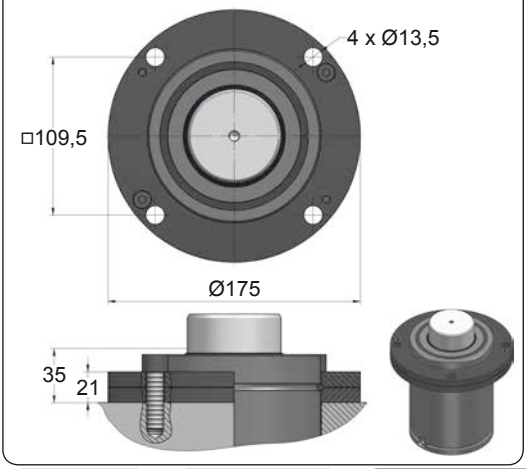


## A34-120

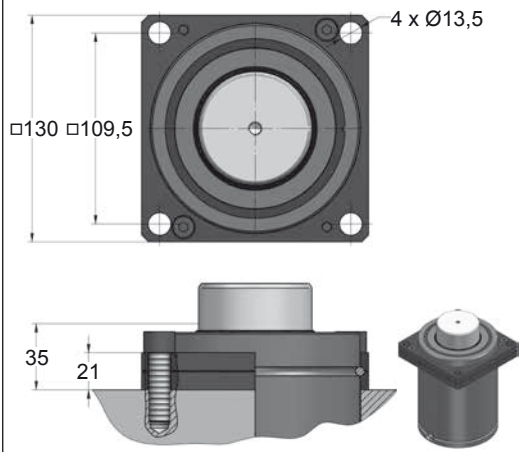





| CODE | | CM 6500 050 V1 | KIT XXXXXXX-S KIT XXXXXXX-C | A14-120 | 18 GA 5 |
|---|---|---|---|---|---|
| ENG | ORDER | GAS SPRING | REPAIR KIT | FLANGE | CHARGING ADAPTER |
| DEU | BESTELLUNG | GASDRUCKFEDER | ERSATZTEILSATZ | FLANSCHE | LADEADAPTER |
| FRA | COMMANDE | RESSORT À GAZ | KIT DE RÉPARATION | BRIDE | RACCORD DE CHARGE |
| ITA | ORDINE | CILINDRO AD AZOTO | KIT DI MANUTENZIONE | FLANGE | ADATTATORE DI CARICO |
| ESP | PEDIDO | RESORTE DE GAS | KIT DE REPARACION | BRIDA | ADAPTADOR DE CARGA |
| POR | PEDIDO | CILINDRO DE GÁS | KIT DE MANUTENÇÃO | FLANGE | ADAPTADOR DE CARGA |

# CM 6500 V1 MOUNTS

*Heavy Duty*

AZOL GAS

## B21-120

EM24.54.700/F

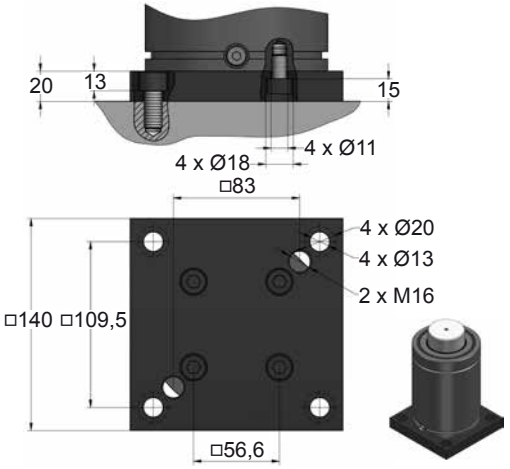


## B76-120

EM24.54.700/F

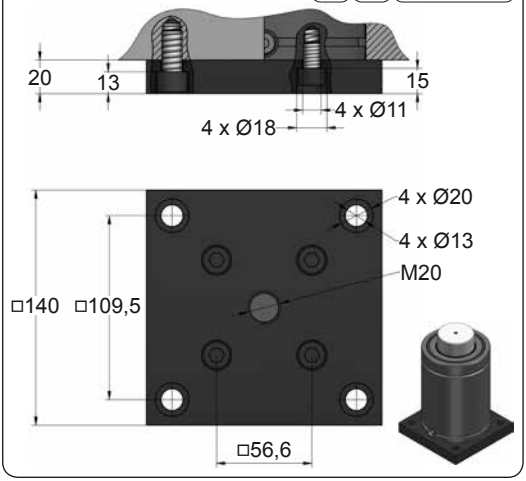


## C05-120

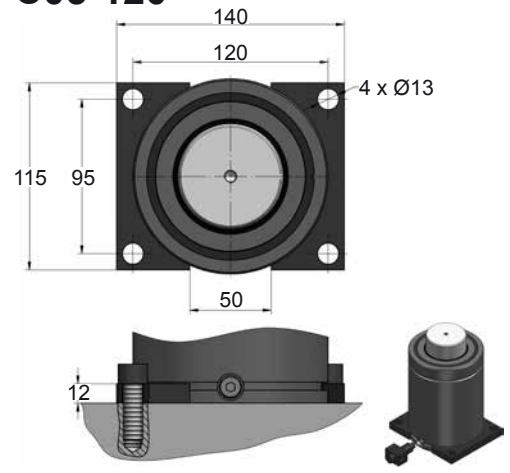


## C20-120

E24.54.815.G
EM24.54.700/F

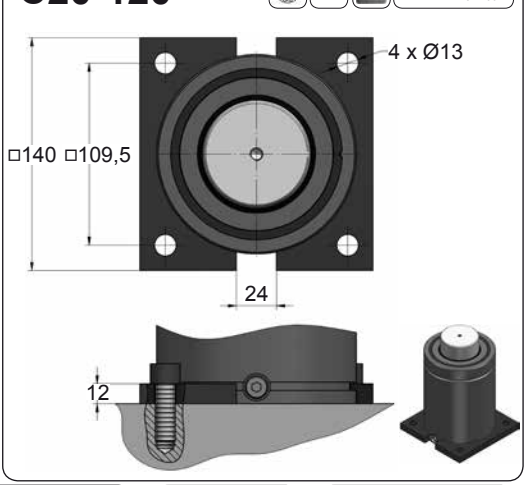




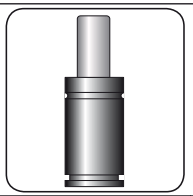




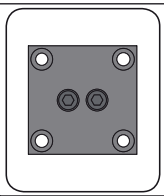

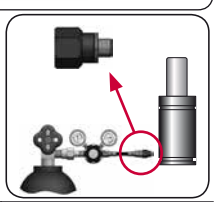

| CODE | | CM 6500 050 V1 | KIT XXXXXXX-S<br>KIT XXXXXXX-C | B21-120 | 18 GA 5 |
|---|---|---|---|---|---|
| ENG | ORDER | GAS SPRING | REPAIR KIT | FLANGE | CHARGING ADAPTER |
| DEU | BESTELLUNG | GASDRUCKFEDER | ERSATZTEILSATZ | FLANSCHE | LADEADAPTER |
| FRA | COMMANDE | RESSORT À GAZ | KIT DE RÉPARATION | BRIDE | RACCORD DE CHARGE |
| ITA | ORDINE | CILINDRO AD AZOTO | KIT DI MANUTENZIONE | FLANGE | ADATTATORE DI CARICO |
| ESP | PEDIDO | RESORTE DE GAS | KIT DE REPARACION | BRIDA | ADAPTADOR DE CARGA |
| POR | PEDIDO | CILINDRO DE GÁS | KIT DE MANUTENÇÃO | FLANGE | ADAPTADOR DE CARGA |

AZOL GAS

# CM 6500 V1 MOUNTS

*Heavy Duty*

## D02-120

ISO E24.54.815.G EM24.54.700/F

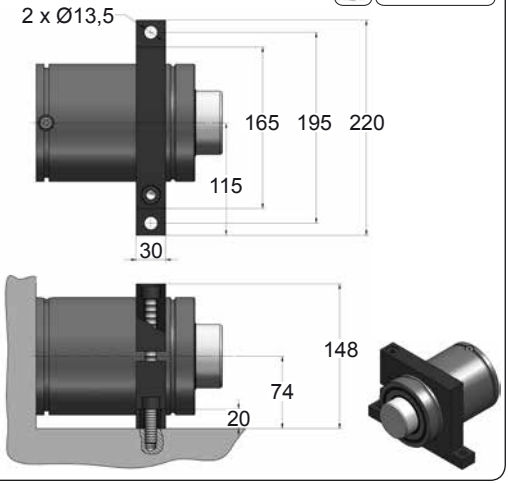


## D67-120

VDI

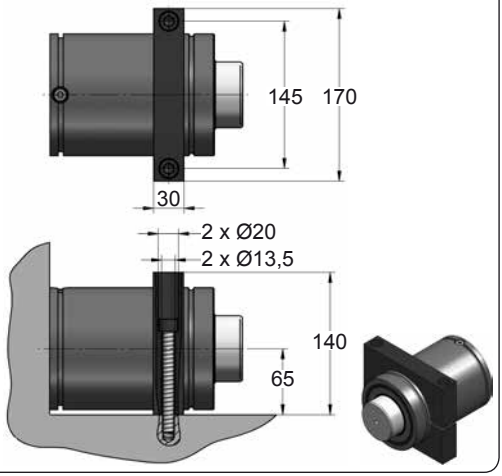









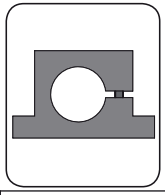

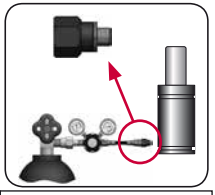

| CODE | | CM 6500 050 V1 | KIT XXXXXXX-S<br>KIT XXXXXXX-C | D02-120 | 18 GA 5 |
|---|---|---|---|---|---|
| ENG | ORDER | GAS SPRING | REPAIR KIT | FLANGE | CHARGING ADAPTER |
| DEU | BESTELLUNG | GASDRUCKFEDER | ERSATZTEILSATZ | FLANSCHE | LADEADAPTER |
| FRA | COMMANDE | RESSORT À GAZ | KIT DE RÉPARATION | BRIDE | RACCORD DE CHARGE |
| ITA | ORDINE | CILINDRO AD AZOTO | KIT DI MANUTENZIONE | FLANGE | ADATTATORE DI CARICO |
| ESP | PEDIDO | RESORTE DE GAS | KIT DE REPARACION | BRIDA | ADAPTADOR DE CARGA |
| POR | PEDIDO | CILINDRO DE GÁS | KIT DE MANUTENÇÃO | FLANGE | ADAPTADOR DE CARGA |

# CM 10000

*Heavy Duty*

AZOL GAS

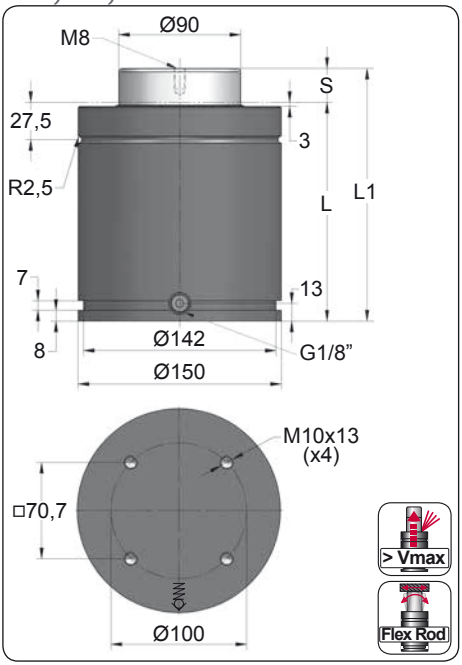


| ORDER | S (mm) | L1 ±0,25 (mm) | L (mm) | Kg. |
|---|---|---|---|---|
| CM 10000 025 | 25 | 186 | 161 | 18.25 |
| CM 10000 038 | 38 | 212 | 174 | 19.32 |
| CM 10000 050 | 50 | 236 | 186 | 20.31 |
| CM 10000 063 | 63 | 262 | 199 | 21.38 |
| CM 10000 080 | 80 | 296 | 216 | 22.79 |
| CM 10000 100 | 100 | 336 | 236 | 24.43 |
| CM 10000 125 | 125 | 386 | 261 | 26.50 |
| CM 10000 160 | 160 | 456 | 296 | 29.38 |
| CM 10000 200 | 200 | 536 | 336 | 32.68 |

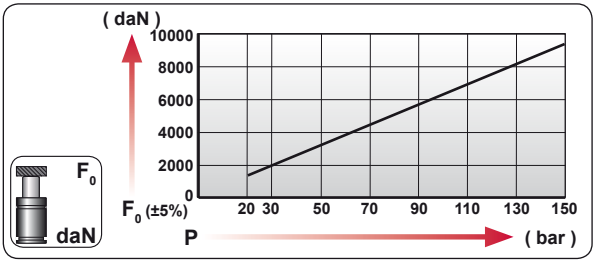


| CODE | bar | psi | $F_0$ daN | $F_1$ daN |
|---|---|---|---|---|
| CM 10000 050 | 150 | 2175 | 9540 | 16200 |
| CM-H 10000 050 | 0 | 0 | --- | --- |

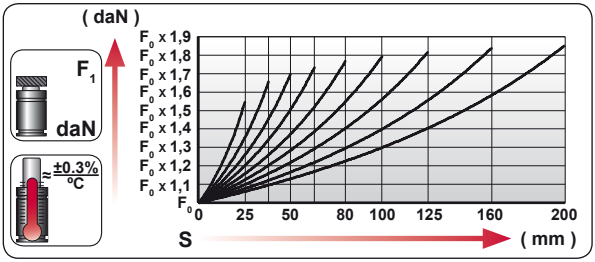


| | |
|---|---|
| ENG | ORDER |
| DEU | BESTELLUNG |
| FRA | COMMANDE |
| ITA | ORDINE |
| ESP | PEDIDO |
| POR | PEDIDO |

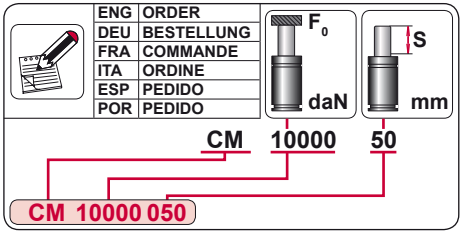


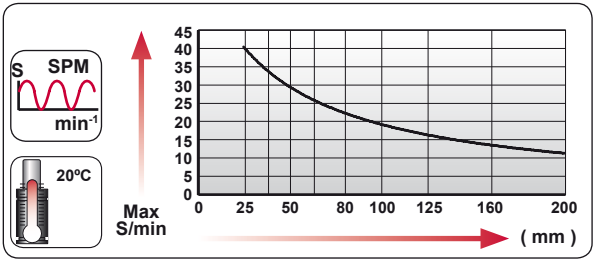


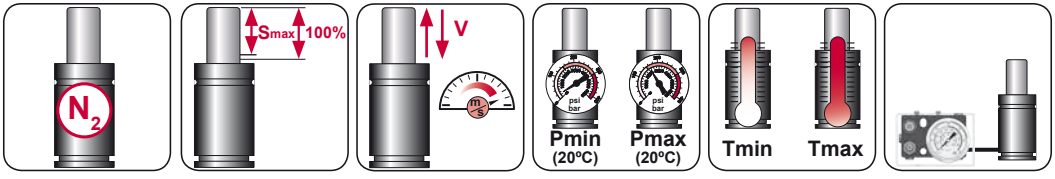


| $N_2$ | Smax < 90% | Vmax 1,6 m/s | bar psi 20 290 | bar psi 160 2320 | °C °F 0 32 | °C °F 80 176 | 600 CP- |
|---|---|---|---|---|---|---|---|

AZOL GAS

# CM 10000 MOUNTS

*Heavy Duty*

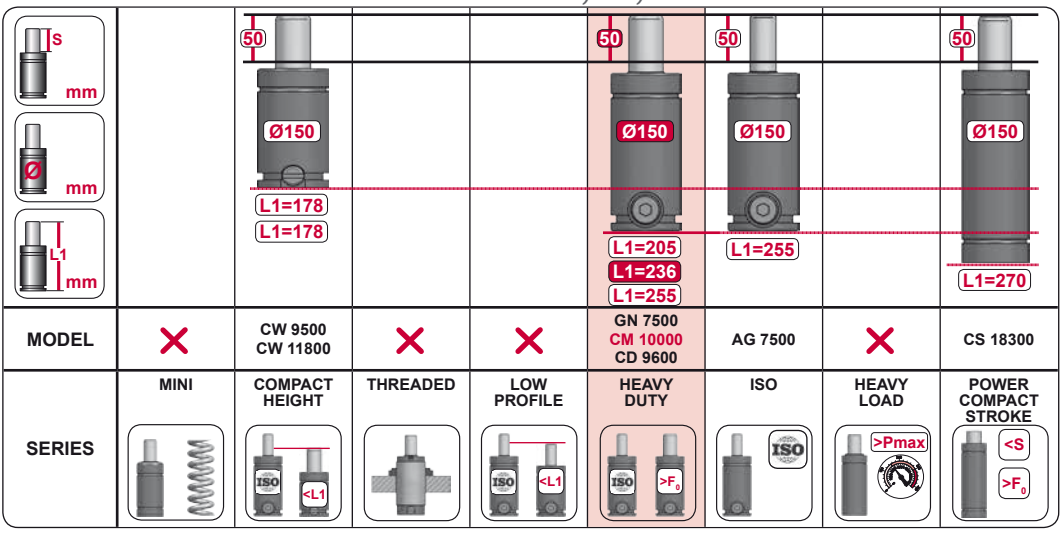


| MODEL | × | CW 9500 CW 11800 | × | × | GN 7500 CM 10000 CD 9600 | AG 7500 | × | CS 18300 |
|---|---|---|---|---|---|---|---|---|
| SERIES | MINI | COMPACT HEIGHT | THREADED | LOW PROFILE | HEAVY DUTY | ISO | HEAVY LOAD | POWER COMPACT STROKE |

## A14-150

ISO E24.54.815.G EM24.54.700/F

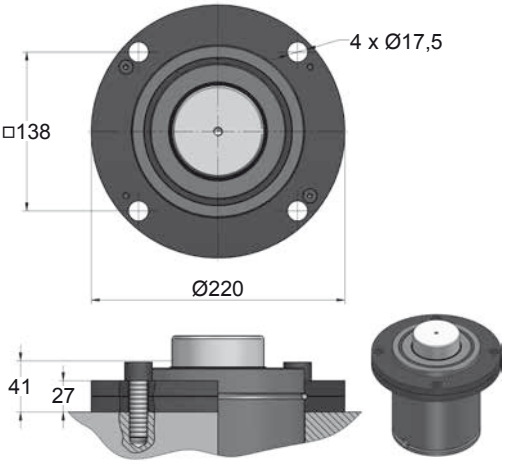


## A34-150

ISO VDI

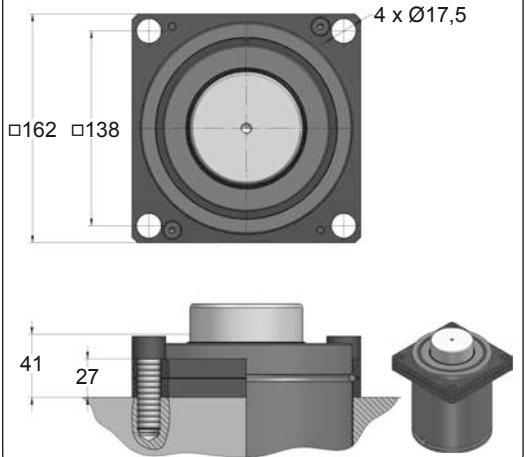





| CODE | | CM 10000 050 | KIT XXXXXXX-S KIT XXXXXXX-C | A14-150 | 18 GA 5 |
|---|---|---|---|---|---|
| ENG | ORDER | GAS SPRING | REPAIR KIT | FLANGE | CHARGING ADAPTER |
| DEU | BESTELLUNG | GASDRUCKFEDER | ERSATZTEILSATZ | FLANSCHE | LADEADAPTER |
| FRA | COMMANDE | RESSORT À GAZ | KIT DE RÉPARATION | BRIDE | RACCORD DE CHARGE |
| ITA | ORDINE | CILINDRO AD AZOTO | KIT DI MANUTENZIONE | FLANGE | ADATTATORE DI CARICO |
| ESP | PEDIDO | RESORTE DE GAS | KIT DE REPARACION | BRIDA | ADAPTADOR DE CARGA |
| POR | PEDIDO | CILINDRO DE GÁS | KIT DE MANUTENÇÃO | FLANGE | ADAPTADOR DE CARGA |

# CM 10000 MOUNTS

*Heavy Duty*

AZOL GAS

## B21-150

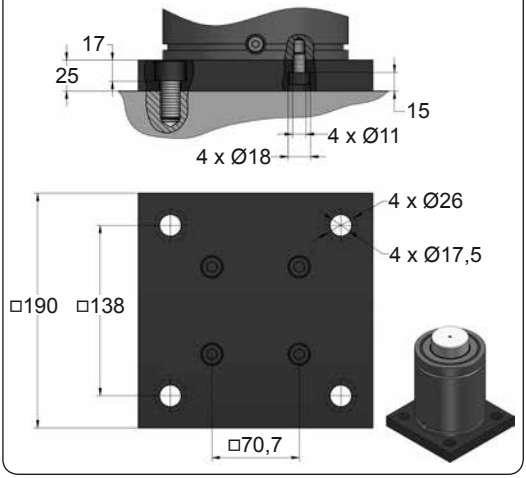


## B76-150

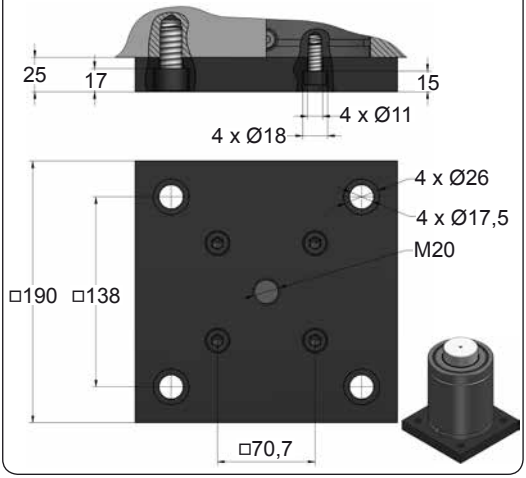


## C05-150

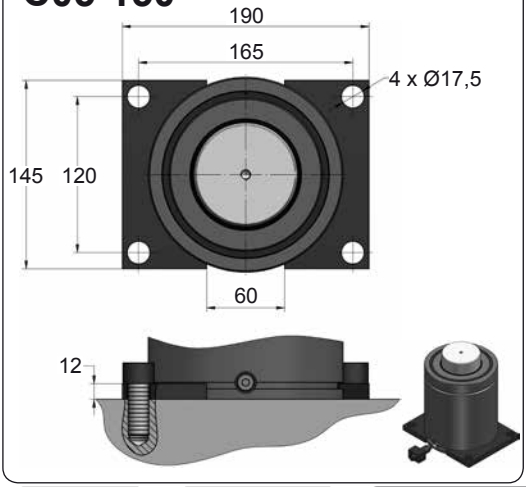


## C20-150

E24.54.815.G
EM24.54.700/F

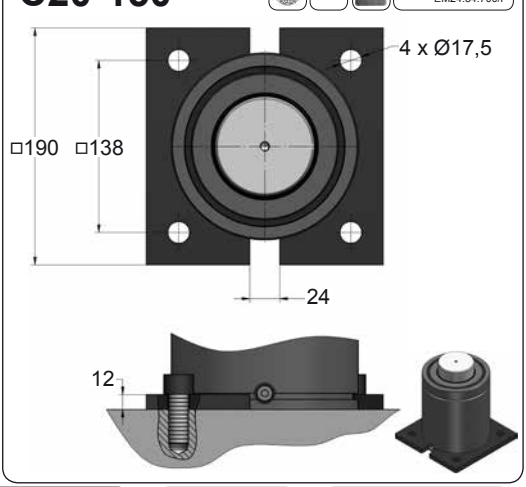









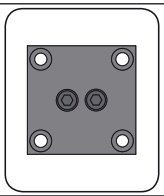

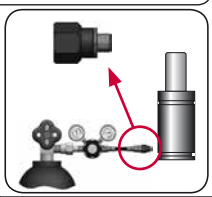

| CODE | | CM 10000 050 | KIT XXXXXXX-S<br>KIT XXXXXXX-C | B21-150 | 18 GA 5 |
|---|---|---|---|---|---|
| ENG | ORDER | GAS SPRING | REPAIR KIT | FLANGE | CHARGING ADAPTER |
| DEU | BESTELLUNG | GASDRUCKFEDER | ERSATZTEILSATZ | FLANSCHE | LADEADAPTER |
| FRA | COMMANDE | RESSORT À GAZ | KIT DE RÉPARATION | BRIDE | RACCORD DE CHARGE |
| ITA | ORDINE | CILINDRO AD AZOTO | KIT DI MANUTENZIONE | FLANGE | ADATTATORE DI CARICO |
| ESP | PEDIDO | RESORTE DE GAS | KIT DE REPARACION | BRIDA | ADAPTADOR DE CARGA |
| POR | PEDIDO | CILINDRO DE GÁS | KIT DE MANUTENÇÃO | FLANGE | ADAPTADOR DE CARGA |

AZOL GAS

# CM 10000 MOUNTS

*Heavy Duty*

## D02-150

ISO E24.54.815.G

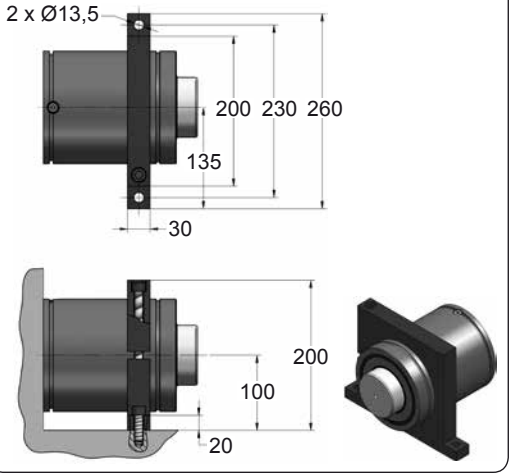


## D67-150

VDI

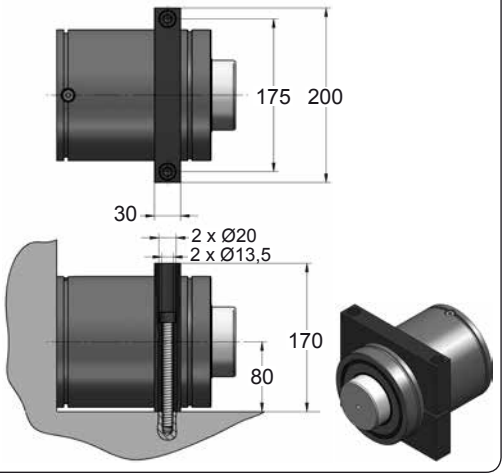









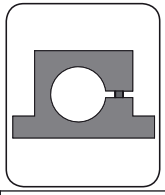

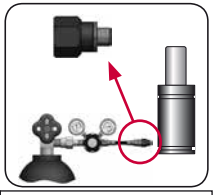

| CODE | | CM 10000 050 | KIT XXXXXXX-S<br>KIT XXXXXXX-C | D02-150 | 18 GA 5 |
|---|---|---|---|---|---|
| ENG | ORDER | GAS SPRING | REPAIR KIT | FLANGE | CHARGING ADAPTER |
| DEU | BESTELLUNG | GASDRUCKFEDER | ERSATZTEILSATZ | FLANSCHE | LADEADAPTER |
| FRA | COMMANDE | RESSORT À GAZ | KIT DE RÉPARATION | BRIDE | RACCORD DE CHARGE |
| ITA | ORDINE | CILINDRO AD AZOTO | KIT DI MANUTENZIONE | FLANGE | ADATTATORE DI CARICO |
| ESP | PEDIDO | RESORTE DE GAS | KIT DE REPARACION | BRIDA | ADAPTADOR DE CARGA |
| POR | PEDIDO | CILINDRO DE GÁS | KIT DE MANUTENÇÃO | FLANGE | ADAPTADOR DE CARGA |

AZOL GAS

# GN HEAVY DUTY SMALL

| MODEL | $F_0$ | Ø | S | L1 | Pmax | Charge Port | | |
|---|---|---|---|---|---|---|---|---|
| GN 750 | 750 | Ø50 | 12.5 - 175 | 95 - 420 | 150 | G1/8" | ✓ | ✓ |
| GN 1500 | 1500 | Ø75 | 25 - 200 | 135 - 485 | 150 | G1/8" | ✓ | ✓ |
| GN 3000 | 3000 | Ø95 | 25 - 225 | 145 - 545 | 150 | G1/8" | ✓ | ✓ |
| GN 5000 | 5000 | Ø120 | 25 - 250 | 152.5 - 602.5 | 150 | G1/8" | ✓ | ✓ |
| GN 7500 | 7500 | Ø150 | 25 - 250 | 155 - 605 | 150 | G1/8" | ✓ | ✓ |

| S mm | Ø mm | L1 mm | | | | | | | |
|---|---|---|---|---|---|---|---|---|---|
| | | | 50 | 50 | 50 | 50 | 50 | 50 | 50 |
| | | | Ø50 | Ø50 | Ø50 | Ø50 | Ø50 | Ø50 | Ø50 |
| | | | L1=131<br>L1=138<br>L1=152 | L1=138 | L1=138<br>L1=150<br>L1=150 | L1=170<br>L1=185<br>L1=195 | L1=195 | L1=165<br>L1=190 | L1=220 |
| $F_0$ daN | | | 1000<br>1000<br>1000 | 1000 | 1000<br>1000<br>750 | 750<br>1000<br>1000 | 750 | 1700<br>2000 | 1800 |
| MODEL | ✕ | | CR 1000<br>CW 1000<br>KZ 1000 | AS 1000 | CT 1000<br>CK 1000<br>FD 750 | GN 750<br>CM 1000<br>CD 1000 | AG 750 | CPH 1700<br>CP 2000 | CS 1800 |
| SERIES | MINI | | COMPACT HEIGHT | THREADED | LOW PROFILE | HEAVY DUTY | ISO | HEAVY LOAD | POWER COMPACT STROKE |

# GN 750

*Heavy Duty*

AZOL GAS

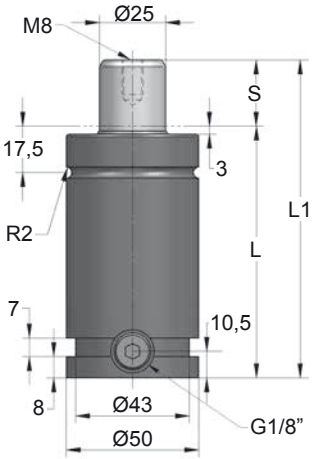


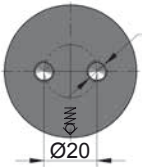





| ORDER | S (mm) | L1 ±0,25 (mm) | L (mm) | Kg. |
|---|---|---|---|---|
| GN 750 012 | 12.5 | 95 | 82.5 | 0.88 |
| GN 750 025 | 25 | 120 | 95 | 1.01 |
| GN 750 037 | 37.5 | 145 | 107.5 | 1.14 |
| GN 750 050 | 50 | 170 | 120 | 1.27 |
| GN 750 062 | 62.5 | 195 | 132.5 | 1.40 |
| GN 750 080 | 80 | 230 | 150 | 1.58 |
| GN 750 100 | 100 | 270 | 170 | 1.79 |
| GN 750 125 | 125 | 320 | 195 | 2.05 |
| GN 750 137 | 137.5 | 345 | 207.5 | 2.18 |
| GN 750 150 | 150 | 370 | 220 | 2.31 |
| GN 750 160 | 160 | 390 | 230 | 2.41 |
| GN 750 175 | 175 | 420 | 245 | 2.57 |

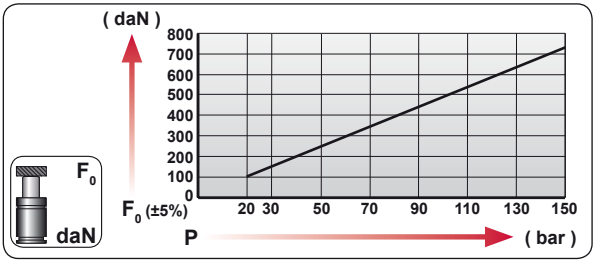


| CODE | bar | psi | F0 daN | F1 daN |
|---|---|---|---|---|
| GN 750 050 | 150 | 2175 | 740 | 1030 |
| GN-H 750 050 | 0 | 0 | --- | --- |

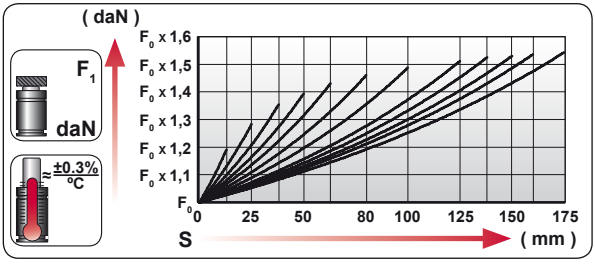


| | |
|---|---|
| ENG | ORDER |
| DEU | BESTELLUNG |
| FRA | COMMANDE |
| ITA | ORDINE |
| ESP | PEDIDO |
| POR | PEDIDO |




GN 750 50

GN 750 050

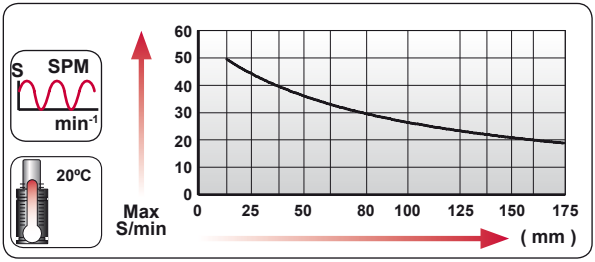


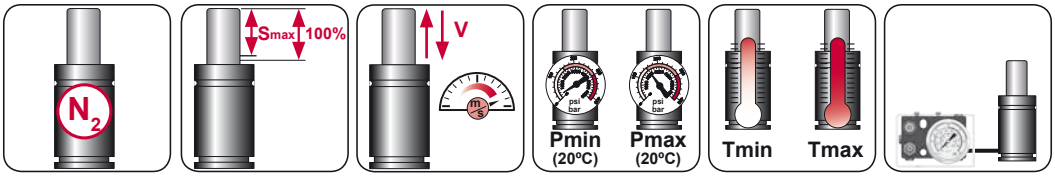


| $N_2$ | Smax < 90% | Vmax 1,6 m/s | bar psi 20 290 | bar psi 150 2175 | °C °F 0 32 | °C °F 80 176 | 600 CP- |
|---|---|---|---|---|---|---|---|

AZOL GAS

# GN 750 MOUNTS

*Heavy Duty*

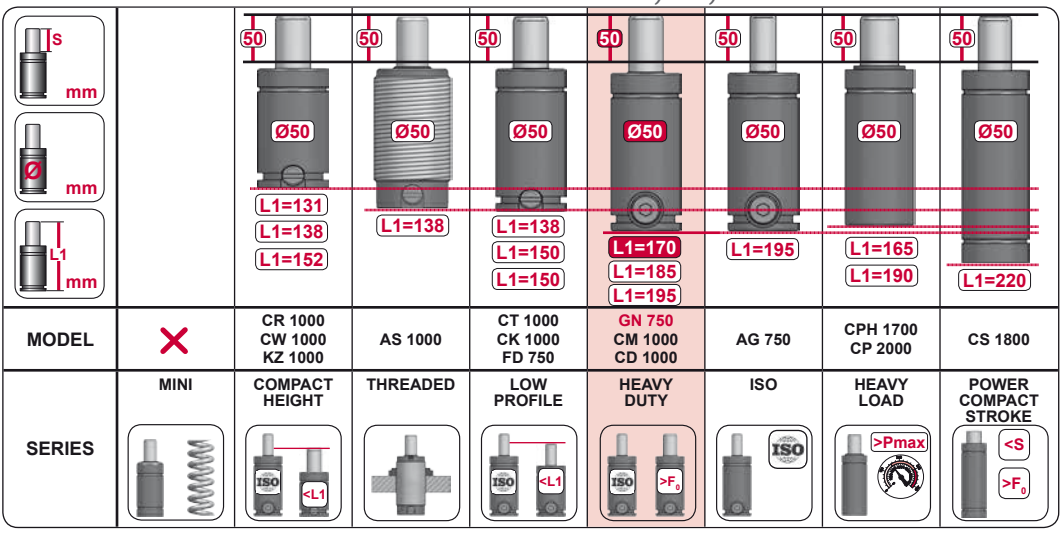


## A14-050

E24.54.815.G
EM24.54.700/F

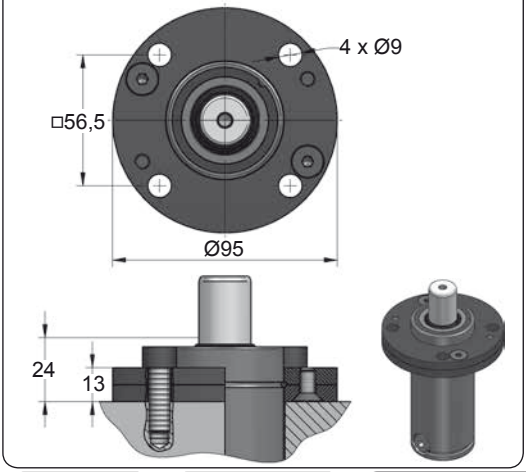


## A34-050

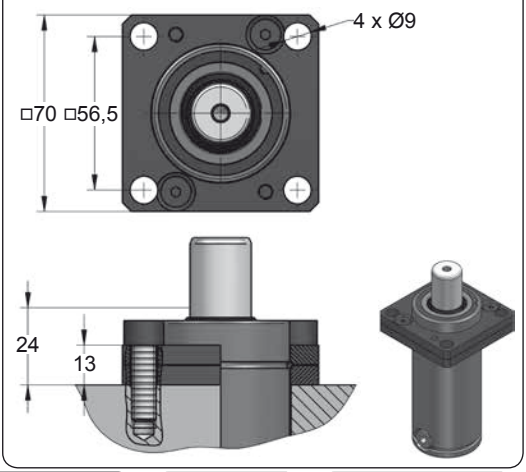





| CODE | | GN 750 050 | KIT XXXXXXX-S<br>KIT XXXXXXX-C | A14-050 | 18 GA 5 |
|---|---|---|---|---|---|
| ENG | ORDER | GAS SPRING | REPAIR KIT | FLANGE | CHARGING ADAPTER |
| DEU | BESTELLUNG | GASDRUCKFEDER | ERSATZTEILSATZ | FLANSCHE | LADEADAPTER |
| FRA | COMMANDE | RESSORT À GAZ | KIT DE RÉPARATION | BRIDE | RACCORD DE CHARGE |
| ITA | ORDINE | CILINDRO AD AZOTO | KIT DI MANUTENZIONE | FLANGE | ADATTATORE DI CARICO |
| ESP | PEDIDO | RESORTE DE GAS | KIT DE REPARACION | BRIDA | ADAPTADOR DE CARGA |
| POR | PEDIDO | CILINDRO DE GÁS | KIT DE MANUTENÇÃO | FLANGE | ADAPTADOR DE CARGA |

# GN 750 MOUNTS

*Heavy Duty*

AZOL GAS

## B21-050

EM24.54.700/F

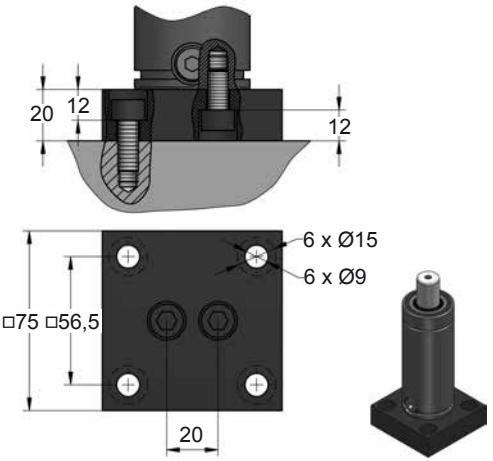


## B76-050

ISO

E24.54.815.G
EM24.54.700/F

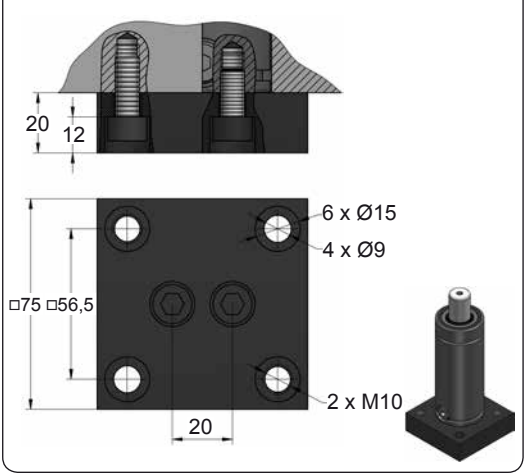


## C05-050

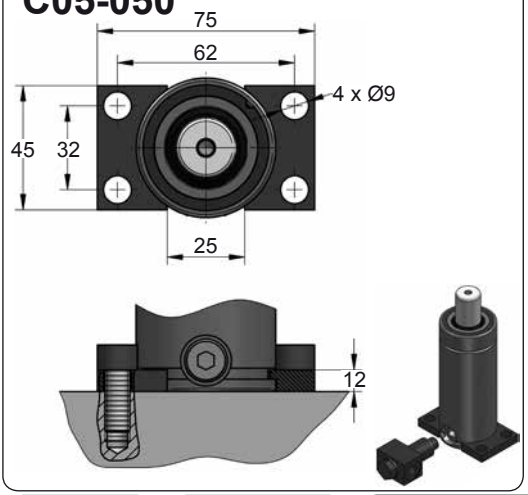


## C20-050

ISO VDI

E24.54.815.G
EM24.54.700/F

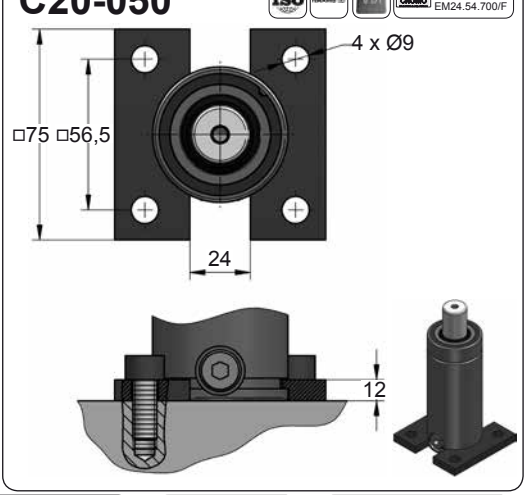









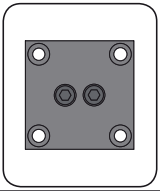

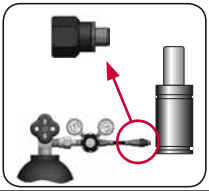

| CODE | | GN 750 050 | KIT XXXXXXX-S<br>KIT XXXXXXX-C | B21-050 | 18 GA 5 |
|---|---|---|---|---|---|
| ENG | ORDER | GAS SPRING | REPAIR KIT | FLANGE | CHARGING ADAPTER |
| DEU | BESTELLUNG | GASDRUCKFEDER | ERSATZTEILSATZ | FLANSCHE | LADEADAPTER |
| FRA | COMMANDE | RESSORT À GAZ | KIT DE RÉPARATION | BRIDE | RACCORD DE CHARGE |
| ITA | ORDINE | CILINDRO AD AZOTO | KIT DI MANUTENZIONE | FLANGE | ADATTATORE DI CARICO |
| ESP | PEDIDO | RESORTE DE GAS | KIT DE REPARACION | BRIDA | ADAPTADOR DE CARGA |
| POR | PEDIDO | CILINDRO DE GÁS | KIT DE MANUTENÇÃO | FLANGE | ADAPTADOR DE CARGA |

AZOL GAS

# GN 750 MOUNTS

*Heavy Duty*

## D02-050

ISO E24.54.815.G EM24.54.700/F

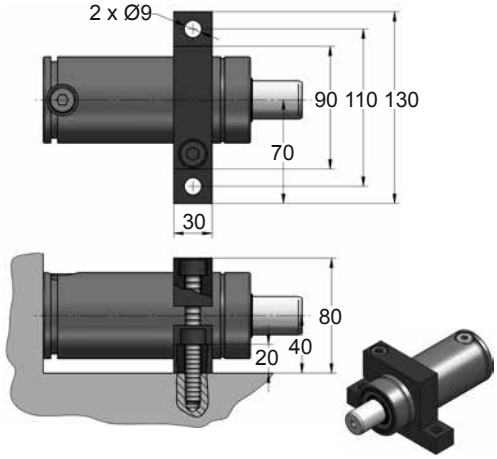


## D67-050

VDI

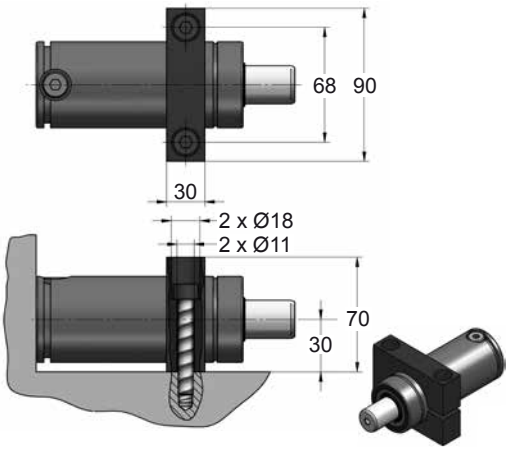









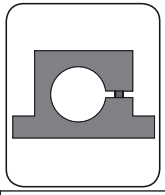

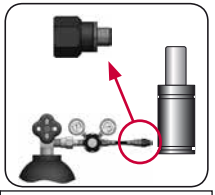

| CODE | | GN 750 050 | KIT XXXXXXX-S<br>KIT XXXXXXX-C | D02-050 | 18 GA 5 |
|---|---|---|---|---|---|
| ENG | ORDER | GAS SPRING | REPAIR KIT | FLANGE | CHARGING ADAPTER |
| DEU | BESTELLUNG | GASDRUCKFEDER | ERSATZTEILSATZ | FLANSCHE | LADEADAPTER |
| FRA | COMMANDE | RESSORT À GAZ | KIT DE RÉPARATION | BRIDE | RACCORD DE CHARGE |
| ITA | ORDINE | CILINDRO AD AZOTO | KIT DI MANUTENZIONE | FLANGE | ADATTATORE DI CARICO |
| ESP | PEDIDO | RESORTE DE GAS | KIT DE REPARACION | BRIDA | ADAPTADOR DE CARGA |
| POR | PEDIDO | CILINDRO DE GÁS | KIT DE MANUTENÇÃO | FLANGE | ADAPTADOR DE CARGA |

# GN 1500

*Heavy Duty*

AZOL GAS

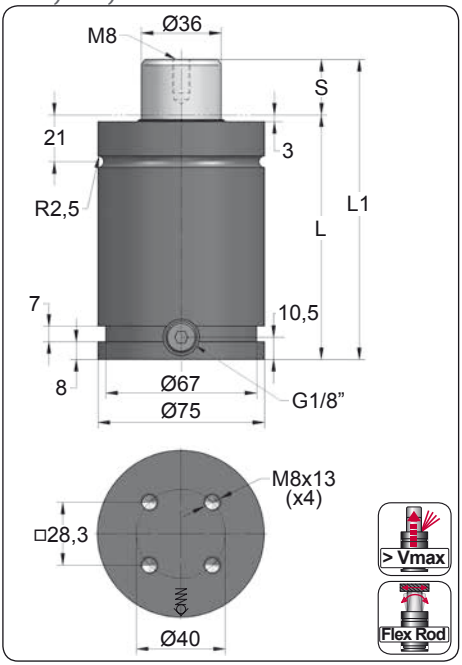


| ORDER | S (mm) | L1 ±0,25 (mm) | L (mm) | Kg. |
|---|---|---|---|---|
| GN 1500 025 | 25 | 135 | 110 | 2.53 |
| GN 1500 037 | 37.5 | 160 | 122.5 | 2.81 |
| GN 1500 050 | 50 | 185 | 135 | 3.08 |
| GN 1500 062 | 62.5 | 210 | 147.5 | 3.36 |
| GN 1500 080 | 80 | 245 | 165 | 3.74 |
| GN 1500 100 | 100 | 285 | 185 | 4.19 |
| GN 1500 125 | 125 | 335 | 210 | 4.74 |
| GN 1500 137 | 137.5 | 360 | 222.5 | 5.01 |
| GN 1500 150 | 150 | 385 | 235 | 5.29 |
| GN 1500 160 | 160 | 405 | 245 | 5.51 |
| GN 1500 175 | 175 | 435 | 260 | 5.84 |
| GN 1500 200 | 200 | 485 | 285 | 6.39 |

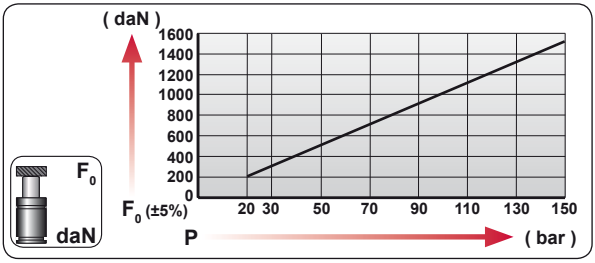


| CODE | bar | psi | F0 daN | F1 daN |
|---|---|---|---|---|
| GN 1500 050 | 150 | 2175 | 1530 | 1920 |
| GN-H 1500 050 | 0 | 0 | --- | --- |

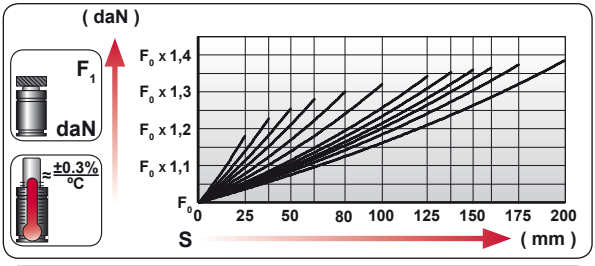


| ENG | ORDER |
|---|---|
| DEU | BESTELLUNG |
| FRA | COMMANDE |
| ITA | ORDINE |
| ESP | PEDIDO |
| POR | PEDIDO |




GN 1500 50

GN 1500 050

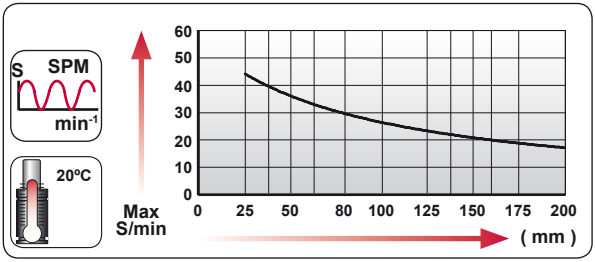


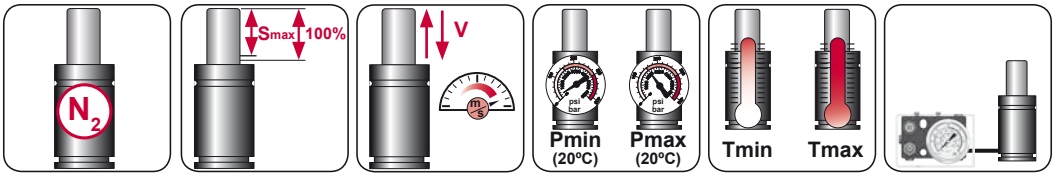


| $N_2$ | Smax < 90% | Vmax 1,6 m/s | bar psi 20 290 | bar psi 150 2175 | °C °F 0 32 | °C °F 80 176 | 600 CP- |
|---|---|---|---|---|---|---|---|

AZOL GAS

# GN 1500 MOUNTS

*Heavy Duty*

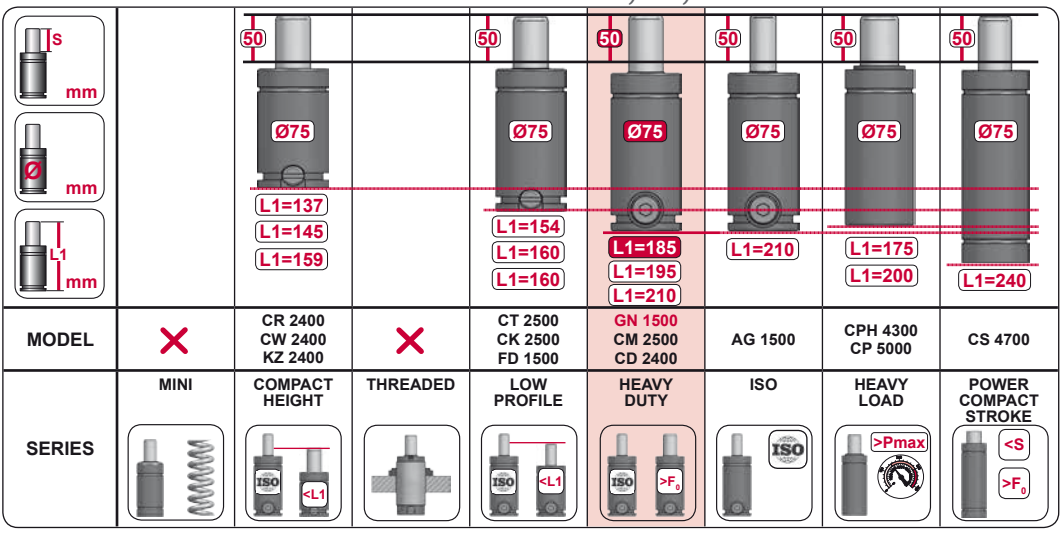


| | | | | | | | | |
|---|---|---|---|---|---|---|---|---|
| **MODEL** | ✕ | CR 2400<br>CW 2400<br>KZ 2400 | ✕ | CT 2500<br>CK 2500<br>FD 1500 | GN 1500<br>CM 2500<br>CD 2400 | AG 1500 | CPH 4300<br>CP 5000 | CS 4700 |
| **SERIES** | MINI | COMPACT HEIGHT | THREADED | LOW PROFILE | HEAVY DUTY | ISO | HEAVY LOAD | POWER COMPACT STROKE |

## A14-075

ISO · E24.54.815.G · EM24.54.700/F

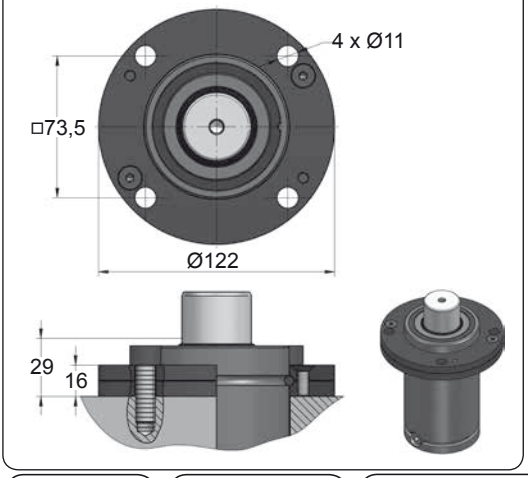


## A34-075

ISO · VDI

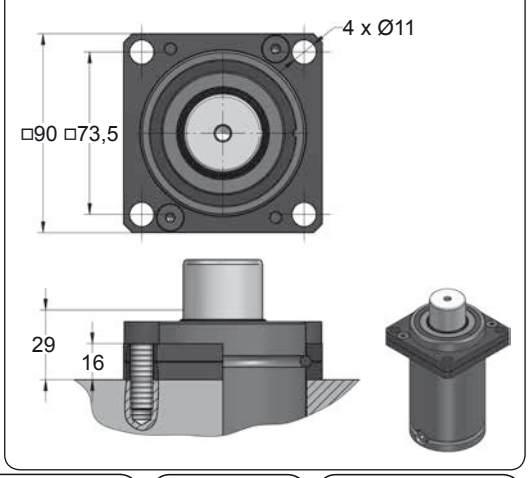





| CODE | GN 1500 050 | KIT XXXXXXX-S<br>KIT XXXXXXX-C | A14-075 | 18 GA 5 |
|---|---|---|---|---|
| ENG ORDER | GAS SPRING | REPAIR KIT | FLANGE | CHARGING ADAPTER |
| DEU BESTELLUNG | GASDRUCKFEDER | ERSATZTEILSATZ | FLANSCHE | LADEADAPTER |
| FRA COMMANDE | RESSORT À GAZ | KIT DE RÉPARATION | BRIDE | RACCORD DE CHARGE |
| ITA ORDINE | CILINDRO AD AZOTO | KIT DI MANUTENZIONE | FLANGE | ADATTATORE DI CARICO |
| ESP PEDIDO | RESORTE DE GAS | KIT DE REPARACION | BRIDA | ADAPTADOR DE CARGA |
| POR PEDIDO | CILINDRO DE GÁS | KIT DE MANUTENÇÃO | FLANGE | ADAPTADOR DE CARGA |

# GN 1500 MOUNTS

*Heavy Duty*

AZOL GAS

## B21-075

EM24.54.700/F

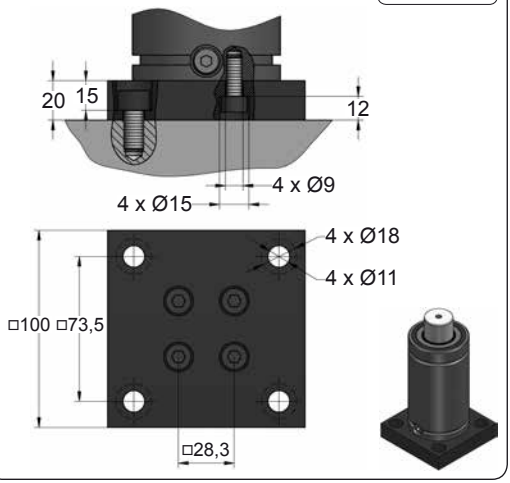


## B76-075

ISO

E24.54.815.G
EM24.54.700/F

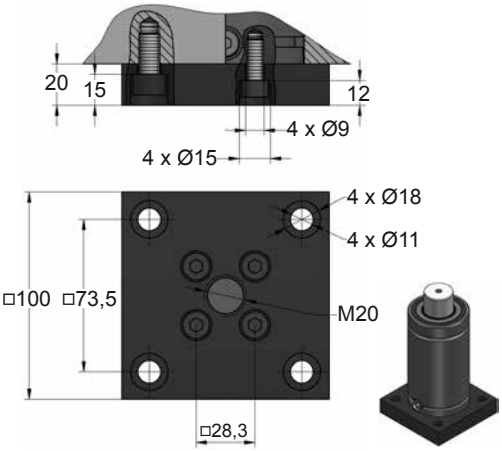


## C05-075

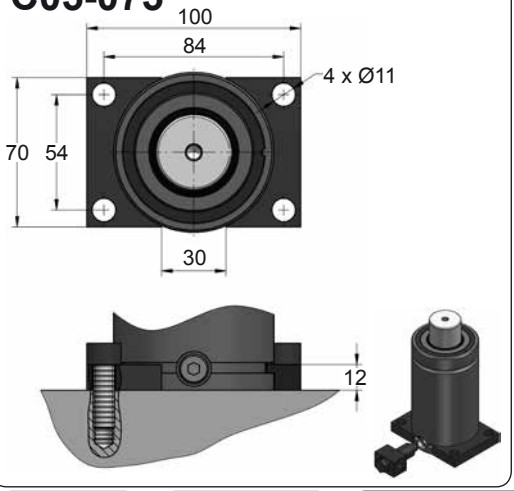


## C20-075

ISO VDI

E24.54.815.G
EM24.54.700/F

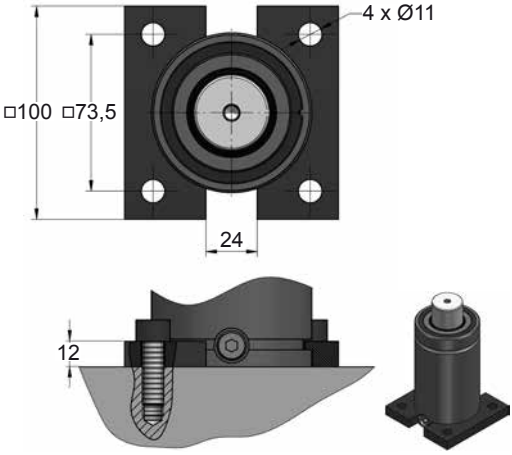









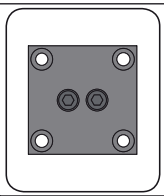

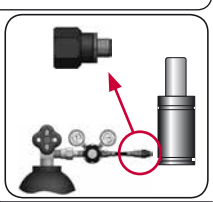

| CODE | | GN 1500 050 | KIT XXXXXXX-S<br>KIT XXXXXXX-C | B21-075 | 18 GA 5 |
|---|---|---|---|---|---|
| ENG | ORDER | GAS SPRING | REPAIR KIT | FLANGE | CHARGING ADAPTER |
| DEU | BESTELLUNG | GASDRUCKFEDER | ERSATZTEILSATZ | FLANSCHE | LADEADAPTER |
| FRA | COMMANDE | RESSORT À GAZ | KIT DE RÉPARATION | BRIDE | RACCORD DE CHARGE |
| ITA | ORDINE | CILINDRO AD AZOTO | KIT DI MANUTENZIONE | FLANGE | ADATTATORE DI CARICO |
| ESP | PEDIDO | RESORTE DE GAS | KIT DE REPARACION | BRIDA | ADAPTADOR DE CARGA |
| POR | PEDIDO | CILINDRO DE GÁS | KIT DE MANUTENÇÃO | FLANGE | ADAPTADOR DE CARGA |

AZOL GAS

# GN 1500 MOUNTS

*Heavy Duty*

## D02-075

ISO E24.54.815.G EM24.54.700/F

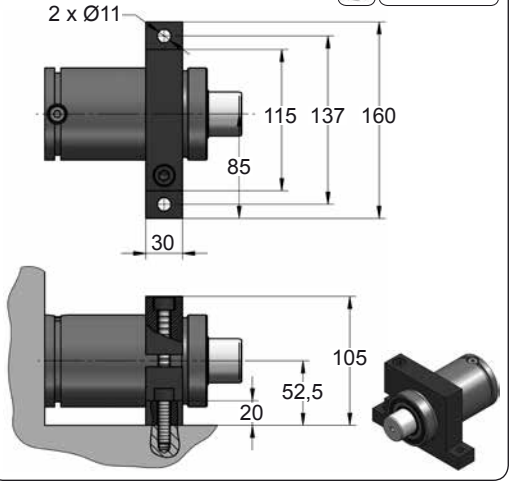


## D67-075

VDI

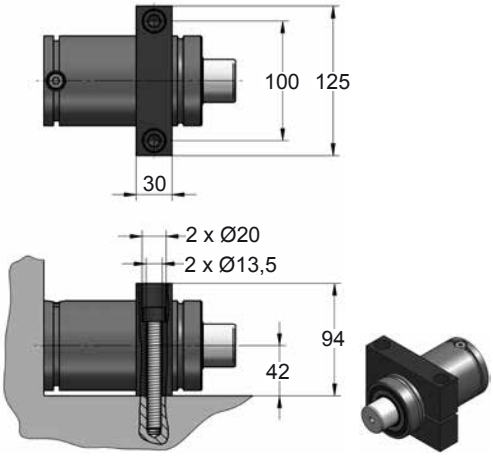









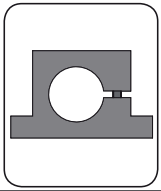

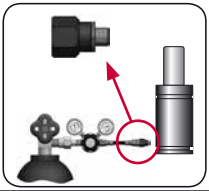

| CODE | | GN 1500 050 | KIT XXXXXXX-S<br>KIT XXXXXXX-C | D02-075 | 18 GA 5 |
|---|---|---|---|---|---|
| ENG | ORDER | GAS SPRING | REPAIR KIT | FLANGE | CHARGING ADAPTER |
| DEU | BESTELLUNG | GASDRUCKFEDER | ERSATZTEILSATZ | FLANSCHE | LADEADAPTER |
| FRA | COMMANDE | RESSORT À GAZ | KIT DE RÉPARATION | BRIDE | RACCORD DE CHARGE |
| ITA | ORDINE | CILINDRO AD AZOTO | KIT DI MANUTENZIONE | FLANGE | ADATTATORE DI CARICO |
| ESP | PEDIDO | RESORTE DE GAS | KIT DE REPARACION | BRIDA | ADAPTADOR DE CARGA |
| POR | PEDIDO | CILINDRO DE GÁS | KIT DE MANUTENÇÃO | FLANGE | ADAPTADOR DE CARGA |

# GN 3000

*Heavy Duty*

AZOL GAS

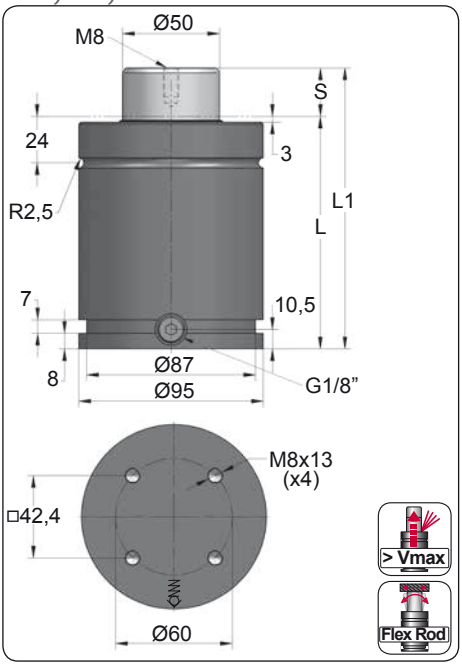


| ORDER | S (mm) | L1 ±0,25 (mm) | L (mm) | Kg. |
|---|---|---|---|---|
| GN 3000 025 | 25 | 145 | 120 | 4.39 |
| GN 3000 037 | 37.5 | 170 | 132.5 | 4.69 |
| GN 3000 050 | 50 | 195 | 145 | 5.00 |
| GN 3000 062 | 62.5 | 220 | 157.5 | 5.31 |
| GN 3000 080 | 80 | 255 | 175 | 5.73 |
| GN 3000 100 | 100 | 295 | 195 | 6.22 |
| GN 3000 125 | 125 | 345 | 220 | 6.84 |
| GN 3000 137 | 137.5 | 370 | 232.5 | 7.14 |
| GN 3000 160 | 160 | 415 | 255 | 7.69 |
| GN 3000 175 | 175 | 445 | 270 | 8.06 |
| GN 3000 200 | 200 | 495 | 295 | 8.67 |
| GN 3000 225 | 225 | 545 | 320 | 9.28 |

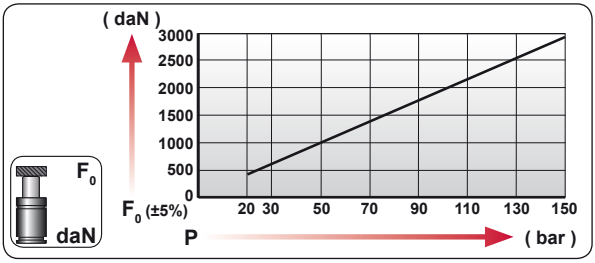


| CODE | bar | psi | F0 daN | F1 daN |
|---|---|---|---|---|
| GN 3000 050 | 150 | 2175 | 2945 | 3800 |
| GN-H 3000 050 | 0 | 0 | --- | --- |

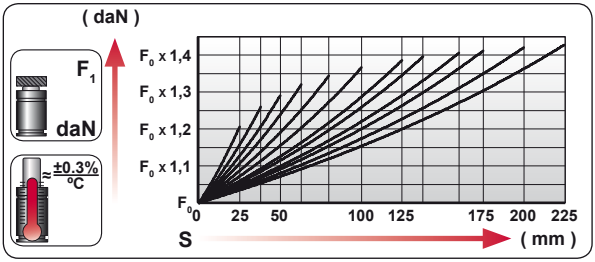


| | |
|---|---|
| ENG | ORDER |
| DEU | BESTELLUNG |
| FRA | COMMANDE |
| ITA | ORDINE |
| ESP | PEDIDO |
| POR | PEDIDO |




GN 3000 50

GN 3000 050

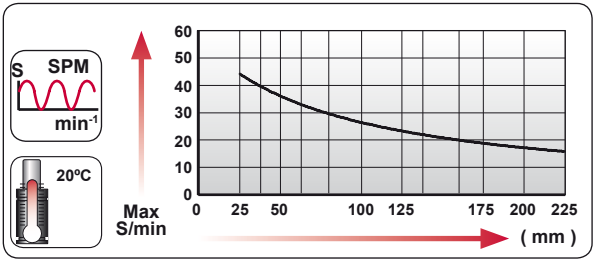


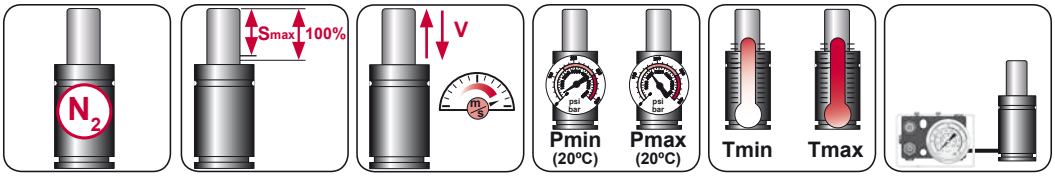


| $N_2$ | Smax < 90% | Vmax 1,6 m/s | bar psi 20 290 | bar psi 150 2175 | °C °F 0 32 | °C °F 80 176 | 600 CP- |
|---|---|---|---|---|---|---|---|

AZOL GAS

# GN 3000 MOUNTS

*Heavy Duty*

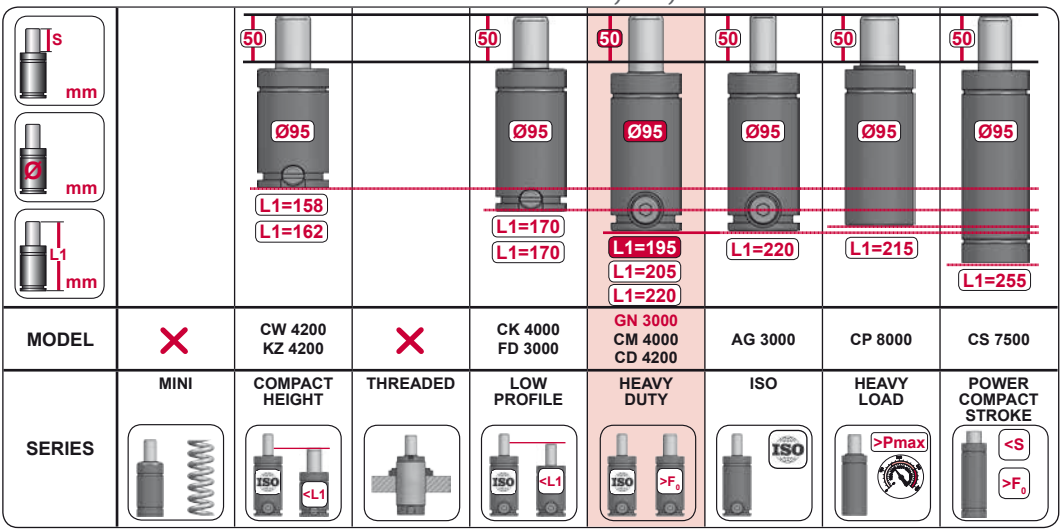


| MODEL | | CW 4200 KZ 4200 | | CK 4000 FD 3000 | GN 3000 CM 4000 CD 4200 | AG 3000 | CP 8000 | CS 7500 |
|---|---|---|---|---|---|---|---|---|
| SERIES | MINI | COMPACT HEIGHT | THREADED | LOW PROFILE | HEAVY DUTY | ISO | HEAVY LOAD | POWER COMPACT STROKE |

## A14-095

ISO E24.54.815.G EM24.54.700/F

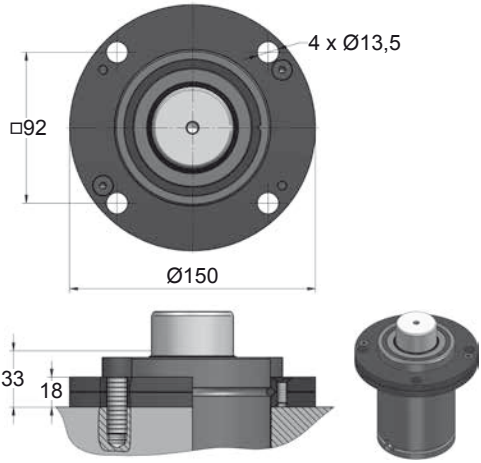


## A34-095

ISO VDI

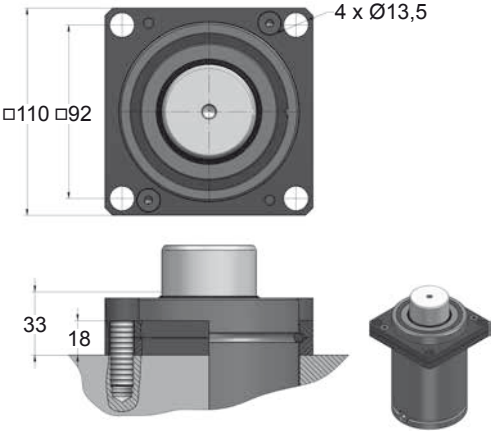





| CODE | | GN 3000 050 | KIT XXXXXXX-S KIT XXXXXXX-C | A14-095 | 18 GA 5 |
|---|---|---|---|---|---|
| ENG | ORDER | GAS SPRING | REPAIR KIT | FLANGE | CHARGING ADAPTER |
| DEU | BESTELLUNG | GASDRUCKFEDER | ERSATZTEILSATZ | FLANSCHE | LADEADAPTER |
| FRA | COMMANDE | RESSORT À GAZ | KIT DE RÉPARATION | BRIDE | RACCORD DE CHARGE |
| ITA | ORDINE | CILINDRO AD AZOTO | KIT DI MANUTENZIONE | FLANGE | ADATTATORE DI CARICO |
| ESP | PEDIDO | RESORTE DE GAS | KIT DE REPARACION | BRIDA | ADAPTADOR DE CARGA |
| POR | PEDIDO | CILINDRO DE GÁS | KIT DE MANUTENÇÃO | FLANGE | ADAPTADOR DE CARGA |

# GN 3000 MOUNTS

*Heavy Duty*

AZOL GAS

## B21-095

EM24.54.700/F

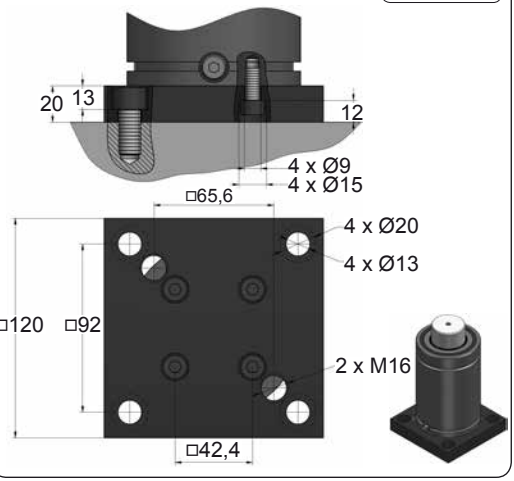


## B76-095

EM24.54.700/F

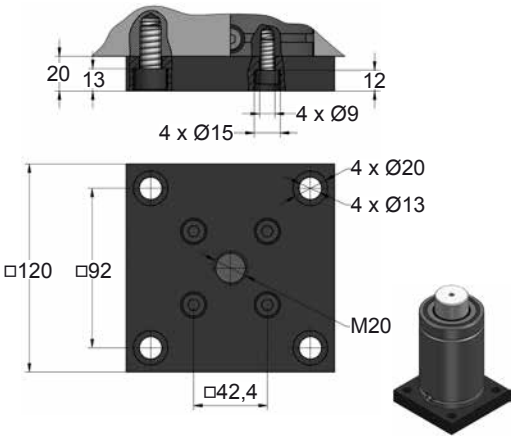


## C05-095

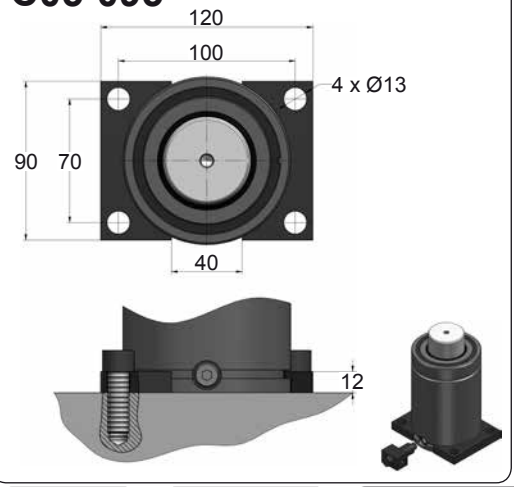


## C20-095

E24.54.815.G
EM24.700/F

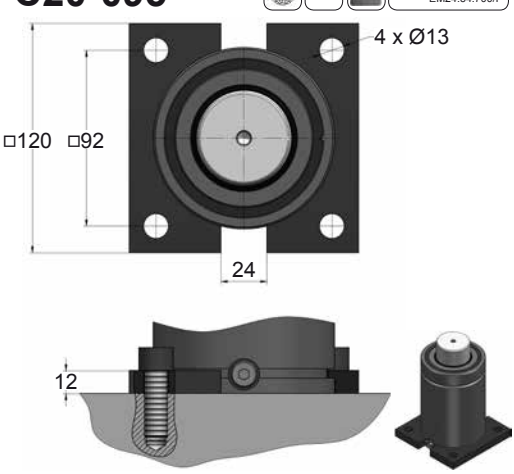









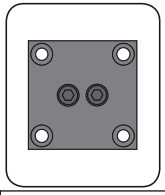

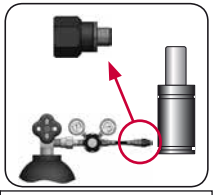

| CODE | | GN 3000 050 | KIT XXXXXXX-S<br>KIT XXXXXXX-C | B21-095 | 18 GA 5 |
|---|---|---|---|---|---|
| ENG | ORDER | GAS SPRING | REPAIR KIT | FLANGE | CHARGING ADAPTER |
| DEU | BESTELLUNG | GASDRUCKFEDER | ERSATZTEILSATZ | FLANSCHE | LADEADAPTER |
| FRA | COMMANDE | RESSORT À GAZ | KIT DE RÉPARATION | BRIDE | RACCORD DE CHARGE |
| ITA | ORDINE | CILINDRO AD AZOTO | KIT DI MANUTENZIONE | FLANGE | ADATTATORE DI CARICO |
| ESP | PEDIDO | RESORTE DE GAS | KIT DE REPARACION | BRIDA | ADAPTADOR DE CARGA |
| POR | PEDIDO | CILINDRO DE GÁS | KIT DE MANUTENÇÃO | FLANGE | ADAPTADOR DE CARGA |

AZOL GAS

# GN 3000 MOUNTS

*Heavy Duty*

## D02-095

ISO E24.54.815.G EM24.54.700/F

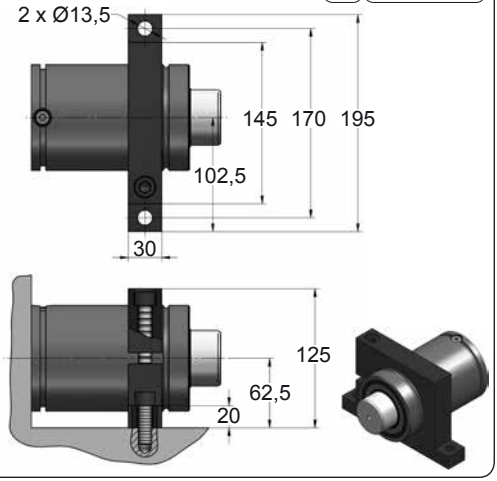


## D67-095

VDI

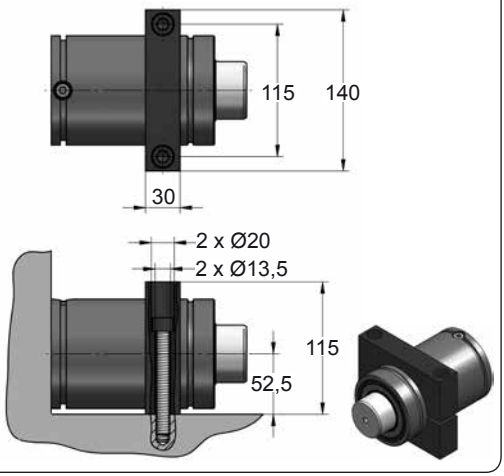









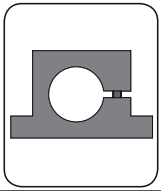

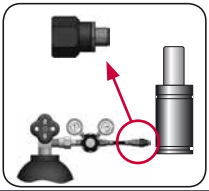

| CODE | | GN 3000 050 | KIT XXXXXXX-S<br>KIT XXXXXXX-C | D02-095 | 18 GA 5 |
|---|---|---|---|---|---|
| ENG | ORDER | GAS SPRING | REPAIR KIT | FLANGE | CHARGING ADAPTER |
| DEU | BESTELLUNG | GASDRUCKFEDER | ERSATZTEILSATZ | FLANSCHE | LADEADAPTER |
| FRA | COMMANDE | RESSORT À GAZ | KIT DE RÉPARATION | BRIDE | RACCORD DE CHARGE |
| ITA | ORDINE | CILINDRO AD AZOTO | KIT DI MANUTENZIONE | FLANGE | ADATTATORE DI CARICO |
| ESP | PEDIDO | RESORTE DE GAS | KIT DE REPARACION | BRIDA | ADAPTADOR DE CARGA |
| POR | PEDIDO | CILINDRO DE GÁS | KIT DE MANUTENÇÃO | FLANGE | ADAPTADOR DE CARGA |

# GN 5000

*Heavy Duty*

AZOL GAS

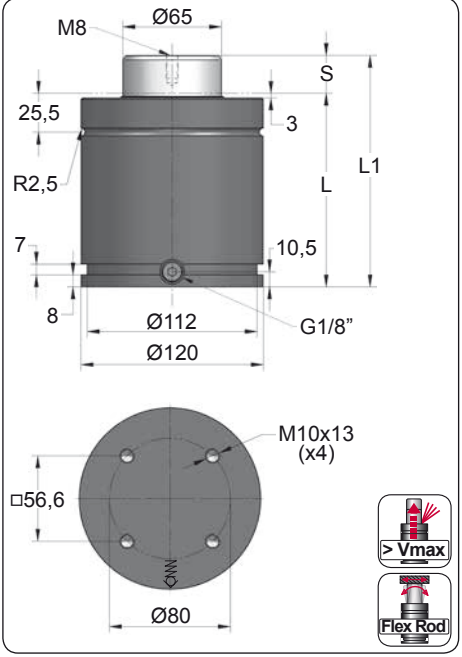


| ORDER | S (mm) | L1 ±0,25 (mm) | L (mm) | Kg. |
|---|---|---|---|---|
| GN 5000 025 | 25 | 152.5 | 127.5 | 8.83 |
| GN 5000 037 | 37.5 | 177.5 | 140 | 9.42 |
| GN 5000 050 | 50 | 202.5 | 152.5 | 10.02 |
| GN 5000 062 | 62.5 | 227.5 | 165 | 10.62 |
| GN 5000 080 | 80 | 262.5 | 182.5 | 11.45 |
| GN 5000 100 | 100 | 302.5 | 202.5 | 12.40 |
| GN 5000 125 | 125 | 352.5 | 227.5 | 13.59 |
| GN 5000 137 | 137.5 | 377.5 | 240 | 14.19 |
| GN 5000 160 | 160 | 422.5 | 262.5 | 15.26 |
| GN 5000 200 | 200 | 502.5 | 302.5 | 17.16 |
| GN 5000 225 | 225 | 552.5 | 327.5 | 18.35 |
| GN 5000 250 | 250 | 602.5 | 352.5 | 19.55 |

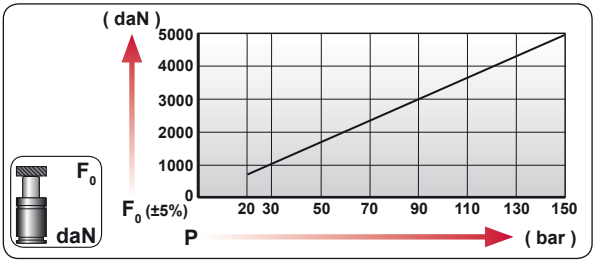


| CODE | bar | psi | F0 daN | F1 daN |
|---|---|---|---|---|
| GN 5000 050 | 150 | 2175 | 4980 | 7355 |
| GN-H 5000 050 | 0 | 0 | --- | --- |

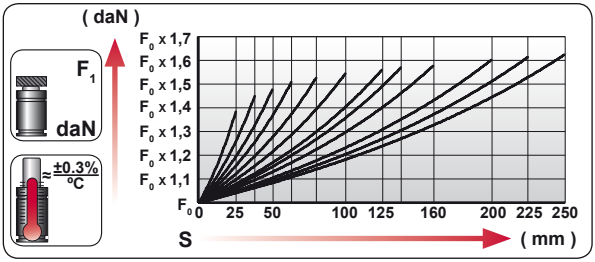


| | |
|---|---|
| ENG | ORDER |
| DEU | BESTELLUNG |
| FRA | COMMANDE |
| ITA | ORDINE |
| ESP | PEDIDO |
| POR | PEDIDO |

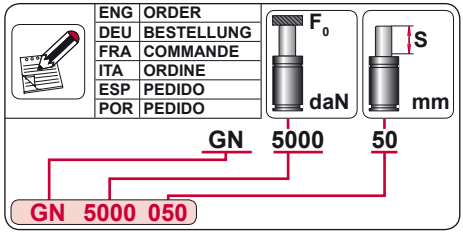


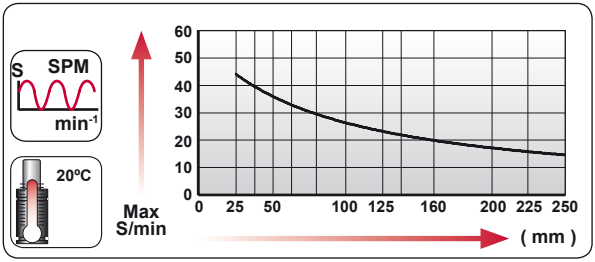


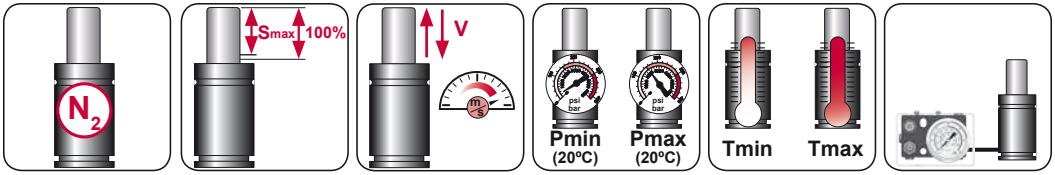


| $N_2$ | Smax < 90% | Vmax 1,6 m/s | bar psi 20 290 | bar psi 150 2175 | ºC ºF 0 32 | ºC ºF 80 176 | 600 CP- |
|---|---|---|---|---|---|---|---|

AZOL GAS

# GN 5000 MOUNTS

*Heavy Duty*

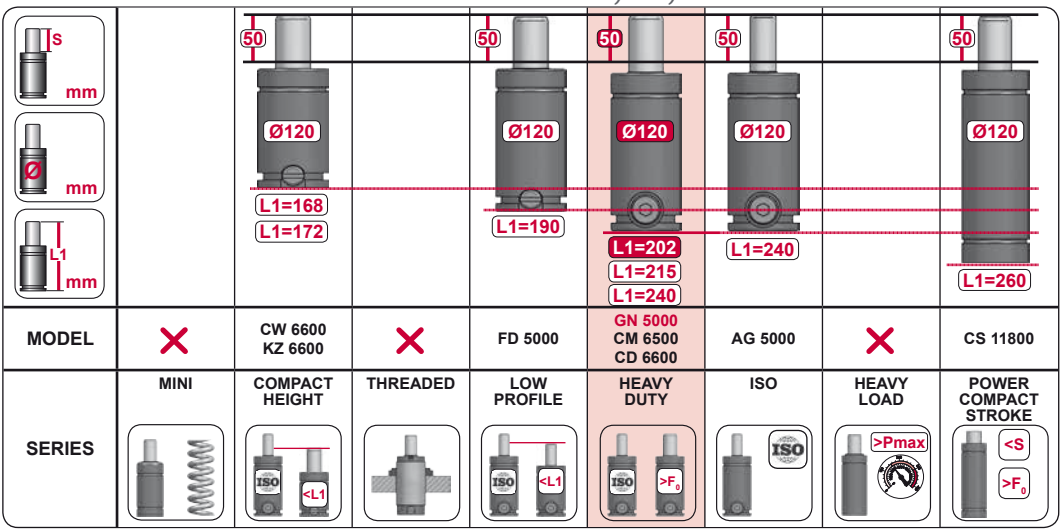


| MODEL | × | CW 6600 KZ 6600 | × | FD 5000 | GN 5000 CM 6500 CD 6600 | AG 5000 | × | CS 11800 |
|---|---|---|---|---|---|---|---|---|
| SERIES | MINI | COMPACT HEIGHT | THREADED | LOW PROFILE | HEAVY DUTY | ISO | HEAVY LOAD | POWER COMPACT STROKE |

## A14-120

E24.54.815.G
EM24.54.700/F

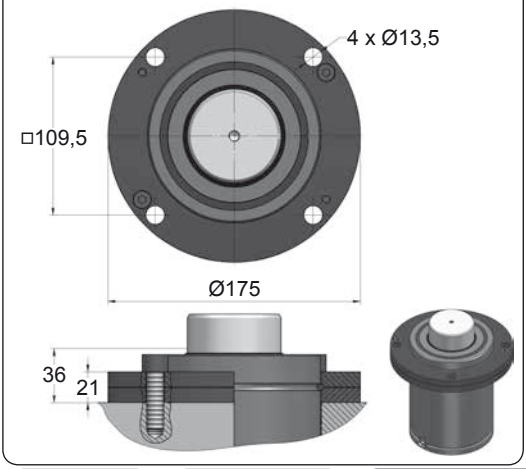


## A34-120

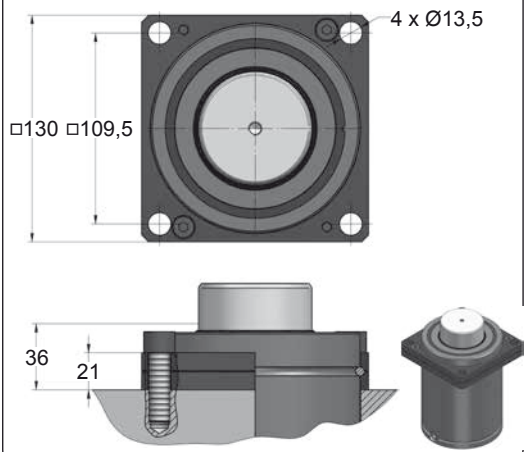





| CODE | | GN 5000 050 | KIT XXXXXXX-S KIT XXXXXXX-C | A14-120 | 18 GA 5 |
|---|---|---|---|---|---|
| ENG | ORDER | GAS SPRING | REPAIR KIT | FLANGE | CHARGING ADAPTER |
| DEU | BESTELLUNG | GASDRUCKFEDER | ERSATZTEILSATZ | FLANSCHE | LADEADAPTER |
| FRA | COMMANDE | RESSORT À GAZ | KIT DE RÉPARATION | BRIDE | RACCORD DE CHARGE |
| ITA | ORDINE | CILINDRO AD AZOTO | KIT DI MANUTENZIONE | FLANGE | ADATTATORE DI CARICO |
| ESP | PEDIDO | RESORTE DE GAS | KIT DE REPARACION | BRIDA | ADAPTADOR DE CARGA |
| POR | PEDIDO | CILINDRO DE GÁS | KIT DE MANUTENÇÃO | FLANGE | ADAPTADOR DE CARGA |

# GN 5000 MOUNTS

*Heavy Duty*

AZOL GAS

## B21-120

EM24.54.700/F

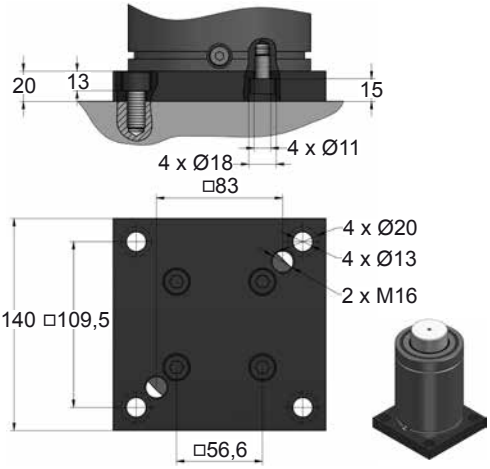


## B76-120

EM24.54.700/F

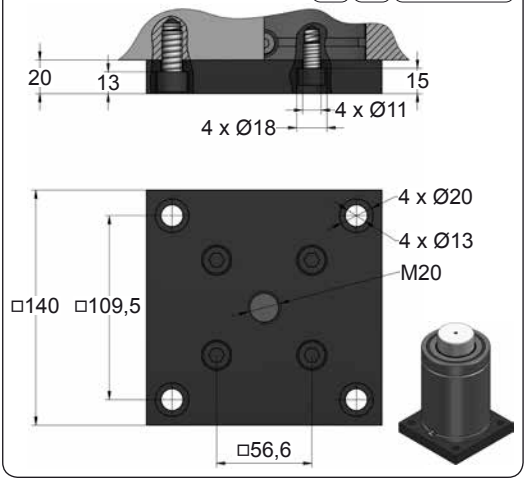


## C05-120

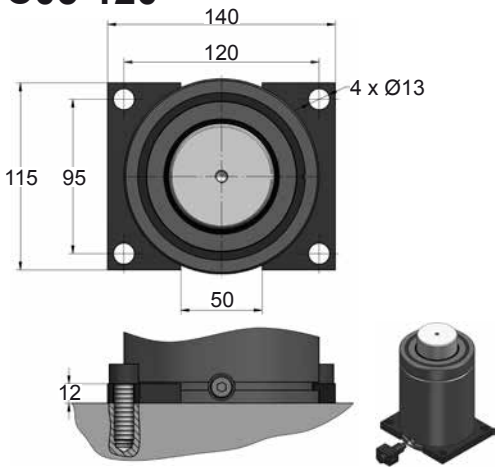


## C20-120

E24.54.815.G
EM24.54.700/F

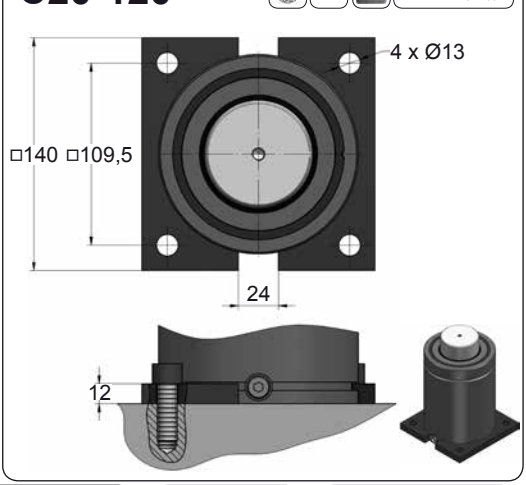









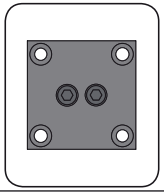

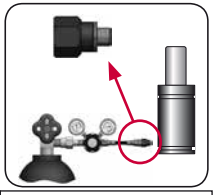

| CODE | | GN 5000 050 | KIT XXXXXXX-S<br>KIT XXXXXXX-C | B21-120 | 18 GA 5 |
|---|---|---|---|---|---|
| ENG | ORDER | GAS SPRING | REPAIR KIT | FLANGE | CHARGING ADAPTER |
| DEU | BESTELLUNG | GASDRUCKFEDER | ERSATZTEILSATZ | FLANSCHE | LADEADAPTER |
| FRA | COMMANDE | RESSORT À GAZ | KIT DE RÉPARATION | BRIDE | RACCORD DE CHARGE |
| ITA | ORDINE | CILINDRO AD AZOTO | KIT DI MANUTENZIONE | FLANGE | ADATTATORE DI CARICO |
| ESP | PEDIDO | RESORTE DE GAS | KIT DE REPARACION | BRIDA | ADAPTADOR DE CARGA |
| POR | PEDIDO | CILINDRO DE GÁS | KIT DE MANUTENÇÃO | FLANGE | ADAPTADOR DE CARGA |

AZOL GAS

# GN 5000 MOUNTS

*Heavy Duty*

## D02-120

ISO E24.54.815.G EM24.54.700/F

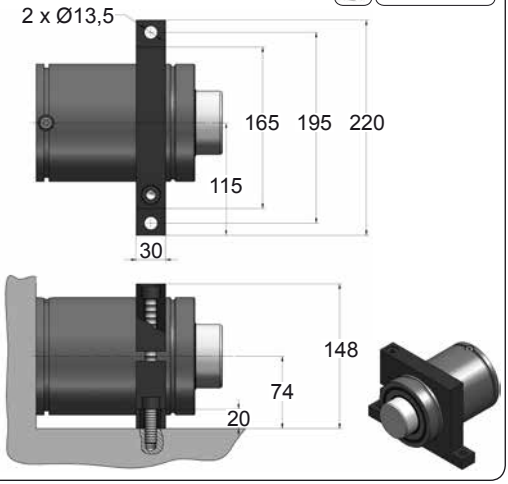


## D67-120

VDI

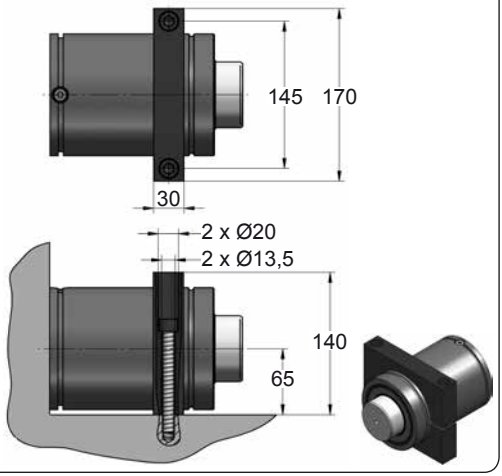









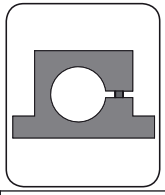

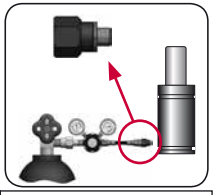

| CODE | | GN 5000 050 | KIT XXXXXXX-S<br>KIT XXXXXXX-C | D02-120 | 18 GA 5 |
|---|---|---|---|---|---|
| ENG | ORDER | GAS SPRING | REPAIR KIT | FLANGE | CHARGING ADAPTER |
| DEU | BESTELLUNG | GASDRUCKFEDER | ERSATZTEILSATZ | FLANSCHE | LADEADAPTER |
| FRA | COMMANDE | RESSORT À GAZ | KIT DE RÉPARATION | BRIDE | RACCORD DE CHARGE |
| ITA | ORDINE | CILINDRO AD AZOTO | KIT DI MANUTENZIONE | FLANGE | ADATTATORE DI CARICO |
| ESP | PEDIDO | RESORTE DE GAS | KIT DE REPARACION | BRIDA | ADAPTADOR DE CARGA |
| POR | PEDIDO | CILINDRO DE GÁS | KIT DE MANUTENÇÃO | FLANGE | ADAPTADOR DE CARGA |

# GN 7500

*Heavy Duty*

AZOL GAS

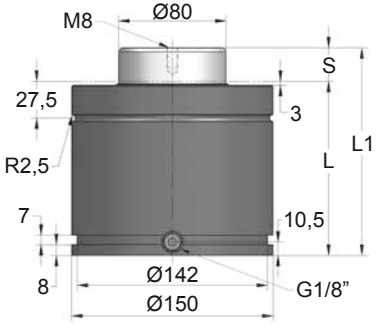


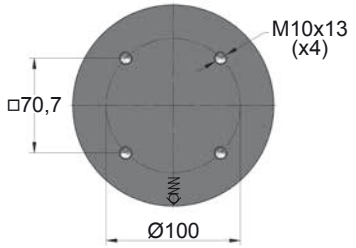








| ORDER | S (mm) | L1 ±0,25 (mm) | L (mm) | Kg. |
|---|---|---|---|---|
| GN 7500 025 | 25 | 155 | 130 | 14.07 |
| GN 7500 037 | 37.5 | 180 | 142.5 | 15.00 |
| GN 7500 050 | 50 | 205 | 155 | 16.13 |
| GN 7500 062 | 62.5 | 230 | 167.5 | 17.16 |
| GN 7500 080 | 80 | 265 | 185 | 18.61 |
| GN 7500 100 | 100 | 305 | 205 | 20.25 |
| GN 7500 125 | 125 | 355 | 230 | 22.32 |
| GN 7500 137 | 137.5 | 380 | 242.5 | 23.35 |
| GN 7500 160 | 160 | 425 | 265 | 25.20 |
| GN 7500 200 | 200 | 505 | 305 | 28.50 |
| GN 7500 225 | 225 | 555 | 330 | 30.56 |
| GN 7500 250 | 250 | 605 | 355 | 32.62 |

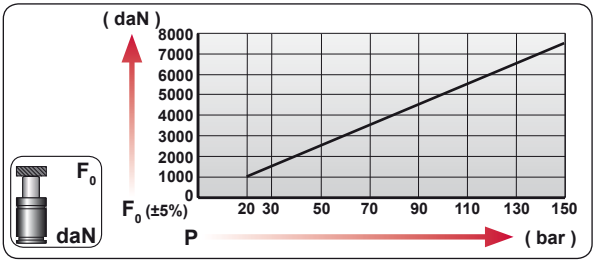


| CODE | bar | psi | $F_0$ daN | $F_1$ daN |
|---|---|---|---|---|
| GN 7500 050 | 150 | 2175 | 7540 | 10860 |
| GN-H 7500 050 | 0 | 0 | --- | --- |

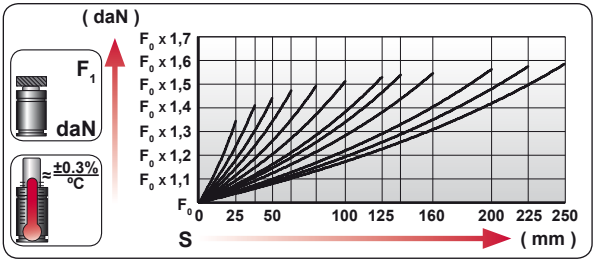


| | |
|---|---|
| ENG | ORDER |
| DEU | BESTELLUNG |
| FRA | COMMANDE |
| ITA | ORDINE |
| ESP | PEDIDO |
| POR | PEDIDO |




GN 7500 50

GN 7500 050

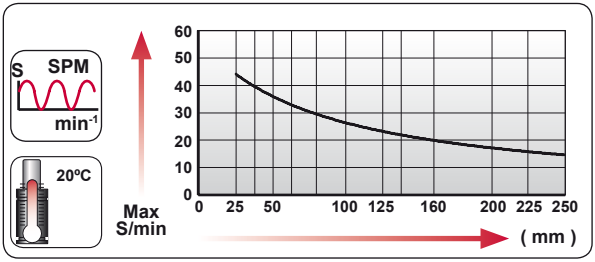





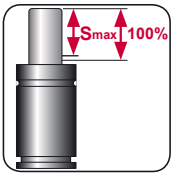


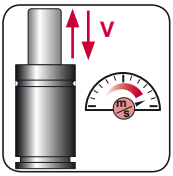


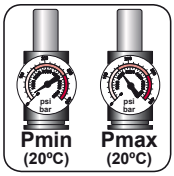


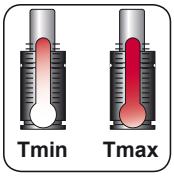




| $N_2$ | Smax < 90% | Vmax 1,6 m/s | bar psi 20 290 | bar psi 150 2175 | °C °F 0 32 | °C °F 80 176 | 600 CP- |
|---|---|---|---|---|---|---|---|

AZOL GAS

# GN 7500 MOUNTS

*Heavy Duty*

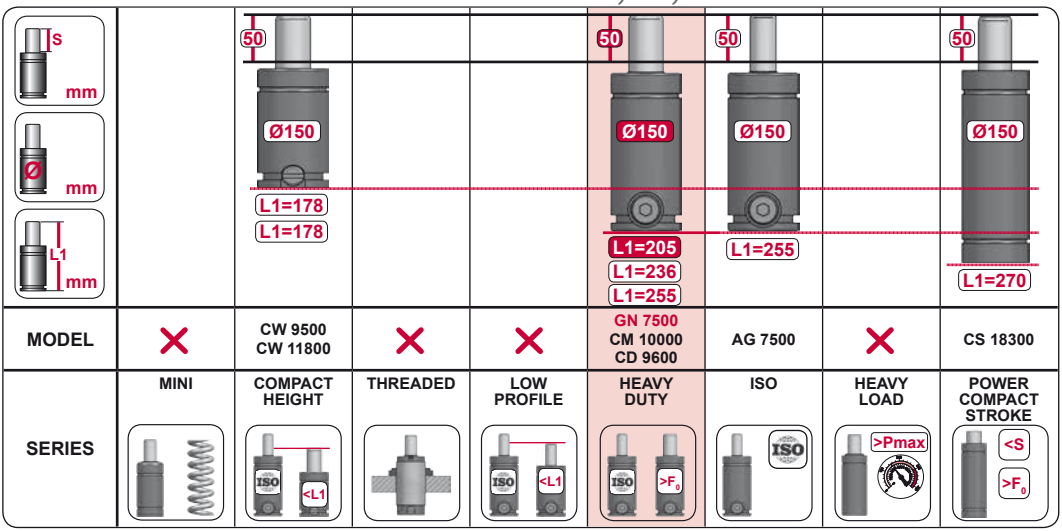


| MODEL | × | CW 9500 CW 11800 | × | × | GN 7500 CM 10000 CD 9600 | AG 7500 | × | CS 18300 |
|---|---|---|---|---|---|---|---|---|
| SERIES | MINI | COMPACT HEIGHT | THREADED | LOW PROFILE | HEAVY DUTY | ISO | HEAVY LOAD | POWER COMPACT STROKE |

## A14-150

ISO E24.54.815.G EM24.54.700/F

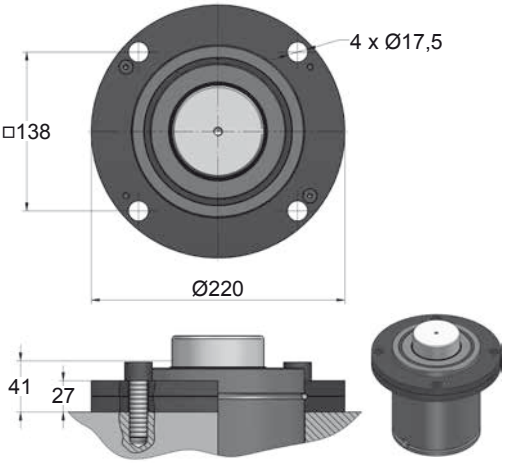


## A34-150

ISO VDI

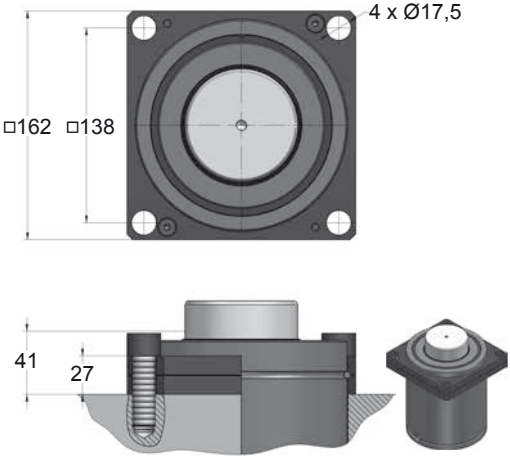





| CODE | | GN 7500 050 | KIT XXXXXXX-S KIT XXXXXXX-C | A14-150 | 18 GA 5 |
|---|---|---|---|---|---|
| ENG | ORDER | GAS SPRING | REPAIR KIT | FLANGE | CHARGING ADAPTER |
| DEU | BESTELLUNG | GASDRUCKFEDER | ERSATZTEILSATZ | FLANSCHE | LADEADAPTER |
| FRA | COMMANDE | RESSORT À GAZ | KIT DE RÉPARATION | BRIDE | RACCORD DE CHARGE |
| ITA | ORDINE | CILINDRO AD AZOTO | KIT DI MANUTENZIONE | FLANGE | ADATTATORE DI CARICO |
| ESP | PEDIDO | RESORTE DE GAS | KIT DE REPARACION | BRIDA | ADAPTADOR DE CARGA |
| POR | PEDIDO | CILINDRO DE GÁS | KIT DE MANUTENÇÃO | FLANGE | ADAPTADOR DE CARGA |

# GN 7500 MOUNTS

*Heavy Duty*

AZOL GAS

## B21-150

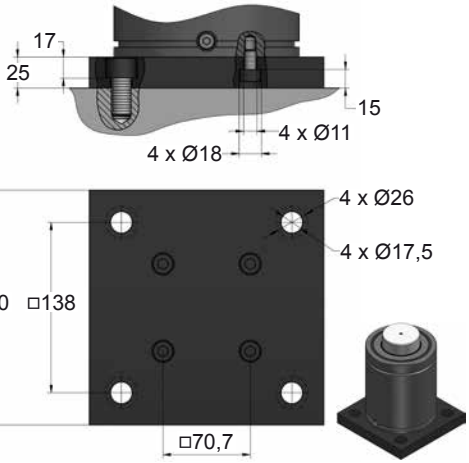


## B76-150

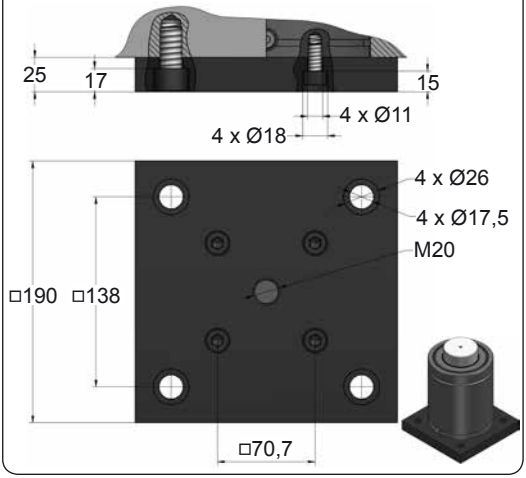


## C05-150

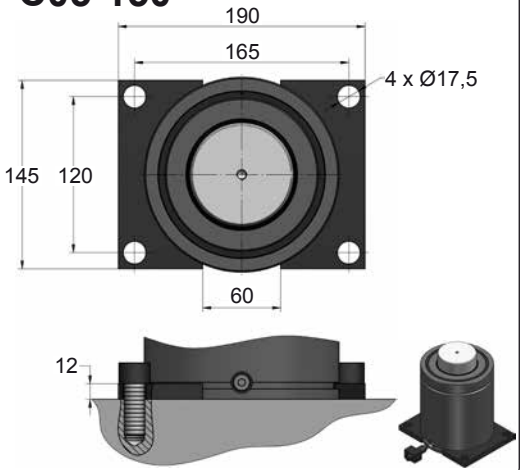


## C20-150

E24.54.815.G
EM24.54.700/F

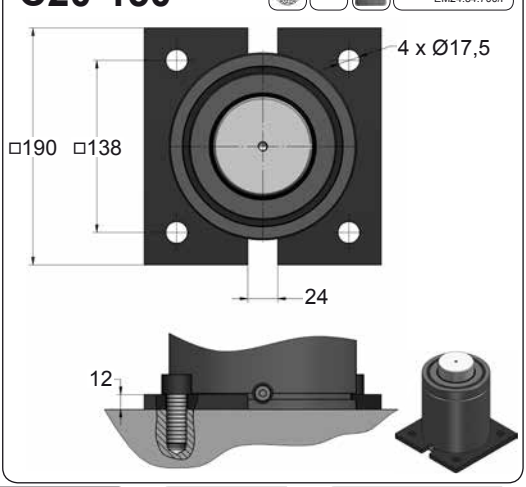





| CODE | | GN 7500 050 | KIT XXXXXXX-S<br>KIT XXXXXXX-C | B21-150 | 18 GA 5 |
|---|---|---|---|---|---|
| ENG | ORDER | GAS SPRING | REPAIR KIT | FLANGE | CHARGING ADAPTER |
| DEU | BESTELLUNG | GASDRUCKFEDER | ERSATZTEILSATZ | FLANSCHE | LADEADAPTER |
| FRA | COMMANDE | RESSORT À GAZ | KIT DE RÉPARATION | BRIDE | RACCORD DE CHARGE |
| ITA | ORDINE | CILINDRO AD AZOTO | KIT DI MANUTENZIONE | FLANGE | ADATTATORE DI CARICO |
| ESP | PEDIDO | RESORTE DE GAS | KIT DE REPARACION | BRIDA | ADAPTADOR DE CARGA |
| POR | PEDIDO | CILINDRO DE GÁS | KIT DE MANUTENÇÃO | FLANGE | ADAPTADOR DE CARGA |

AZOL GAS

# GN 7500 MOUNTS

*Heavy Duty*

## D02-150

ISO E24.54.815.G

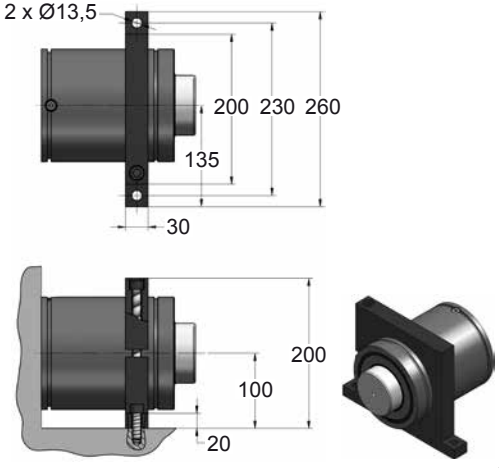


## D67-150

VDI

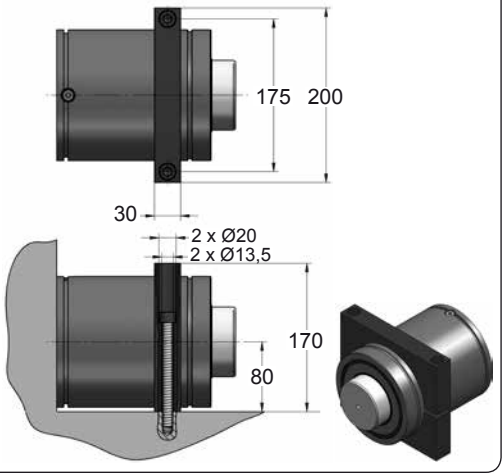









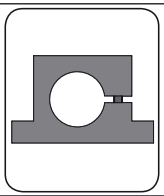

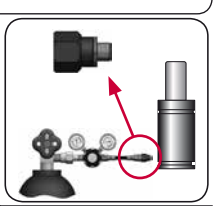

| CODE | | GN 7500 050 | KIT XXXXXXX-S<br>KIT XXXXXXX-C | D02-150 | 18 GA 5 |
|---|---|---|---|---|---|
| ENG | ORDER | GAS SPRING | REPAIR KIT | FLANGE | CHARGING ADAPTER |
| DEU | BESTELLUNG | GASDRUCKFEDER | ERSATZTEILSATZ | FLANSCHE | LADEADAPTER |
| FRA | COMMANDE | RESSORT À GAZ | KIT DE RÉPARATION | BRIDE | RACCORD DE CHARGE |
| ITA | ORDINE | CILINDRO AD AZOTO | KIT DI MANUTENZIONE | FLANGE | ADATTATORE DI CARICO |
| ESP | PEDIDO | RESORTE DE GAS | KIT DE REPARACION | BRIDA | ADAPTADOR DE CARGA |
| POR | PEDIDO | CILINDRO DE GÁS | KIT DE MANUTENÇÃO | FLANGE | ADAPTADOR DE CARGA |

AZOL GAS

# FD LOW PROFILE LARGE

| MODEL | $F_0$ | Ø | S | L1 | Pmax | Charge Port | | |
|---|---|---|---|---|---|---|---|---|
| FD 300 | 300 | Ø38 | 6.3 - 125 | 62.6 - 125 | 150 | M6 | ✓ | ✓ |
| FD 500 | 500 | Ø45 | 6 - 125 | 62 - 300 | 150 | G1/8" | ✓ | ✓ |
| FD 750 V1 | 750 | Ø50 | 6 - 125 | 62 - 300 | 150 | G1/8" | ✓ | ✓ |
| FD 1500 V2 | 1500 | Ø75 | 25 - 100 | 110 - 260 | 150 | G1/8" | ✓ | ✓ |
| FD 3000 | 3000 | Ø95 | 25 - 125 | 120 - 320 | 150 | G1/8" | ✓ | ✓ |
| FD 5000 V1 | 5000 | Ø120 | 25 - 100 | 140 - 290 | 150 | G1/8" | ✓ | ✓ |

| S mm | Ø mm | L1 mm | | | | | | | |
|---|---|---|---|---|---|---|---|---|---|
| | | | 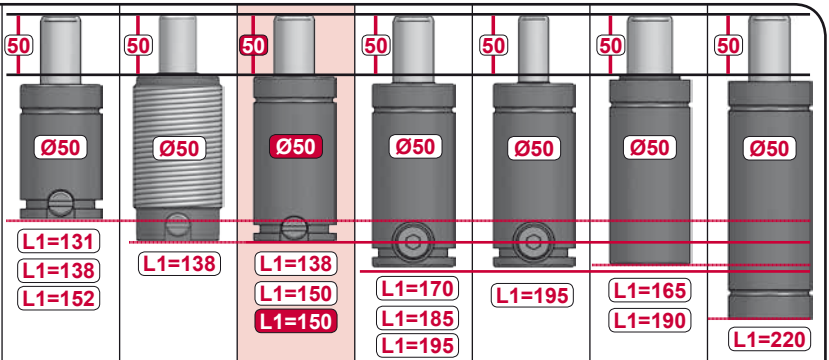 | | | | | | |
| | | | 50 | 50 | 50 | 50 | 50 | 50 | 50 |
| | | | Ø50 | Ø50 | Ø50 | Ø50 | Ø50 | Ø50 | Ø50 |
| | | | L1=131<br>L1=138<br>L1=152 | L1=138 | L1=138<br>L1=150<br>L1=150 | L1=170<br>L1=185<br>L1=195 | L1=195 | L1=165<br>L1=190 | L1=220 |
| | | $F_0$ daN | 1000<br>1000<br>1000 | 1000 | 1000<br>1000<br>750 | 750<br>1000<br>1000 | 750 | 1700<br>2000 | 1800 |
| MODEL | ✗ | | CR 1000<br>CW 1000<br>KZ 1000 | AS 1000 | CT 1000<br>CK 1000<br>FD 750 | GN 750<br>CM 1000<br>CD 1000 | AG 750 | CPH 1700<br>CP 2000 | CS 1800 |
| SERIES | | MINI | COMPACT HEIGHT | THREADED | LOW PROFILE | HEAVY DUTY | ISO | HEAVY LOAD | POWER COMPACT STROKE |

# FD 300

*Low Profile*

AZOL GAS

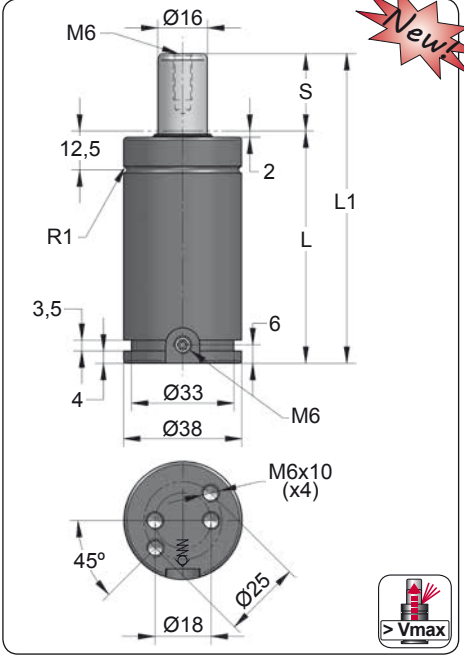


Newt

| CODE | S (mm) | L1 ±0,25 (mm) | L (mm) | Kg. |
|---|---|---|---|---|
| FD 300 006 | 6.3 | 62.6 | 56.3 | 0.39 |
| FD 300 010 | 10 | 70 | 60 | 0.41 |
| FD 300 012 | 12.7 | 75.4 | 62.7 | 0.43 |
| FD 300 016 | 16 | 82 | 66 | 0.45 |
| FD 300 019 | 19 | 88 | 69 | 0.47 |
| FD 300 025 | 25 | 100 | 75 | 0.50 |
| FD 300 032 | 32 | 114 | 82 | 0.54 |
| FD 300 038 | 38 | 126 | 88 | 0.58 |
| FD 300 050 | 50 | 150 | 100 | 0.65 |
| FD 300 063 | 63.5 | 177 | 113.5 | 0.73 |
| FD 300 080 | 80 | 210 | 130 | 0.83 |
| FD 300 100 | 100 | 250 | 150 | 0.95 |
| FD 300 125 | 125 | 300 | 175 | 1.10 |

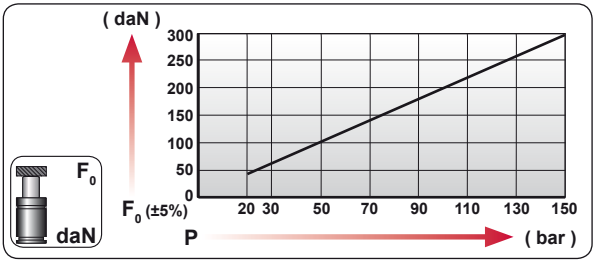


| CODE | bar | psi | F0 daN | F1 daN |
|---|---|---|---|---|
| FD 300 050 | 150 | 2175 | 300 | 430 |
| FD-H 300 050 | 0 | 0 | --- | --- |

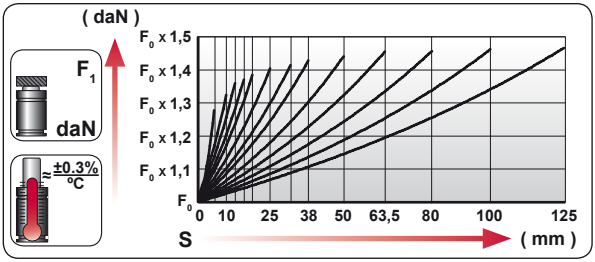


| | |
|---|---|
| ENG | ORDER |
| DEU | BESTELLUNG |
| FRA | COMMANDE |
| ITA | ORDINE |
| ESP | PEDIDO |
| POR | PEDIDO |

F0 daN — S mm

FD 300 50

FD 300 050

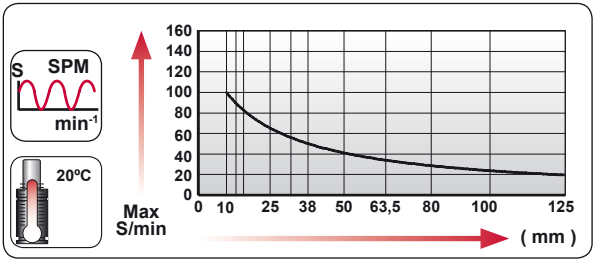


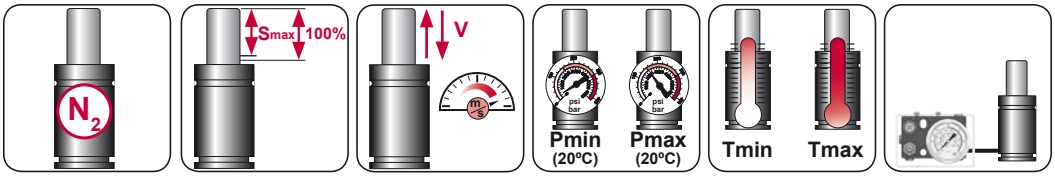


| $N_2$ | Smax < 90% | Vmax 1,6 m/s | bar psi 20 290 | bar psi 150 2175 | ºC ºF 0 32 | ºC ºF 80 176 | 600 CP- |
|---|---|---|---|---|---|---|---|

AZOL GAS

# FD 300 MOUNTS

*Low Profile*

## A14-038

E24.54.815.G
EM24.54.700/F

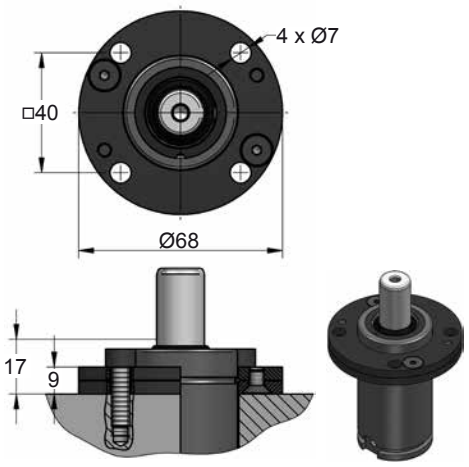


## A34-038

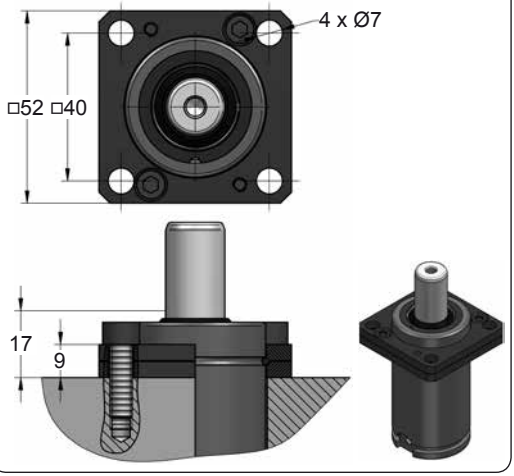


## B76-038

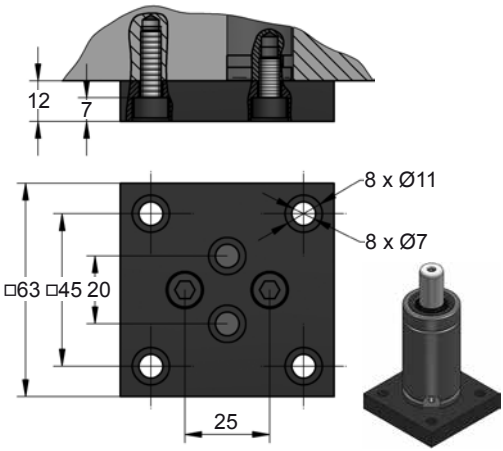


## C05-038

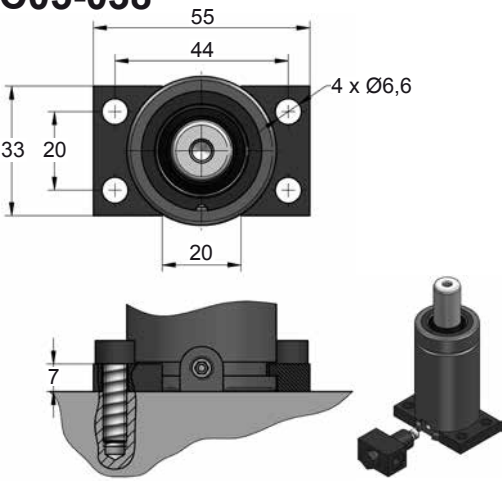









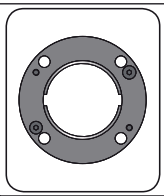

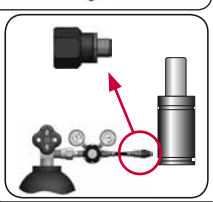

| CODE | | FD 300 050 | KIT XXXXXXX-S<br>KIT XXXXXXX-C | A14-038 | 06 GA 11 |
|---|---|---|---|---|---|
| ENG | ORDER | GAS SPRING | REPAIR KIT | FLANGE | CHARGING ADAPTER |
| DEU | BESTELLUNG | GASDRUCKFEDER | ERSATZTEILSATZ | FLANSCHE | LADEADAPTER |
| FRA | COMMANDE | RESSORT À GAZ | KIT DE RÉPARATION | BRIDE | RACCORD DE CHARGE |
| ITA | ORDINE | CILINDRO AD AZOTO | KIT DI MANUTENZIONE | FLANGE | ADATTATORE DI CARICO |
| ESP | PEDIDO | RESORTE DE GAS | KIT DE REPARACION | BRIDA | ADAPTADOR DE CARGA |
| POR | PEDIDO | CILINDRO DE GÁS | KIT DE MANUTENÇÃO | FLANGE | ADAPTADOR DE CARGA |

# FD 500

*Low Profile*

| | | |
|---|---|---|
| | | |
| | | RENAULT EM24.54.700 |
| | | |

AZOL GAS

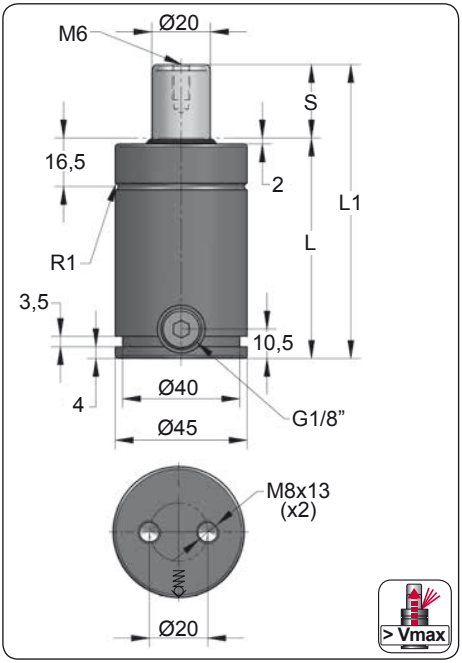


| ORDER | S (mm) | L1 ±0,25 (mm) | L (mm) | Kg. |
|---|---|---|---|---|
| FD 500 006 | 6 | 62 | 56 | 0.54 |
| FD 500 012 | 12.7 | 75.4 | 62.7 | 0.57 |
| FD 500 019 | 19 | 88 | 69 | 0.60 |
| FD 500 025 | 25 | 100 | 75 | 0.64 |
| FD 500 032 | 32 | 114 | 82 | 0.68 |
| FD 500 038 | 38 | 126 | 88 | 0.72 |
| FD 500 050 | 50 | 150 | 100 | 0.81 |
| FD 500 063 | 63.5 | 177 | 113.5 | 0.87 |
| FD 500 080 | 80 | 210 | 130 | 0.97 |
| FD 500 100 | 100 | 250 | 150 | 1.10 |
| FD 500 125 | 125 | 300 | 175 | 1.24 |

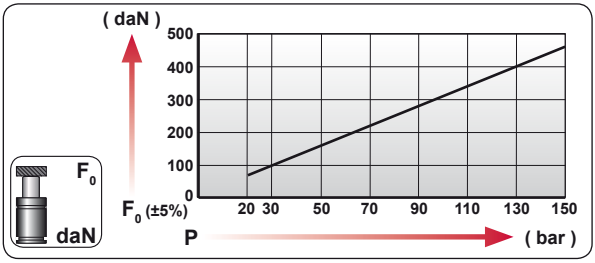


| CODE | bar | psi | F0 daN | F1 daN |
|---|---|---|---|---|
| FD 500 050 | 150 | 2175 | 470 | 640 |
| FD-H 500 050 | 0 | 0 | --- | --- |

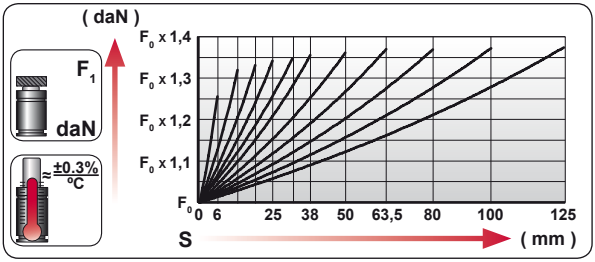


| ENG | ORDER |
|---|---|
| DEU | BESTELLUNG |
| FRA | COMMANDE |
| ITA | ORDINE |
| ESP | PEDIDO |
| POR | PEDIDO |




FD 500 50

FD 500 050

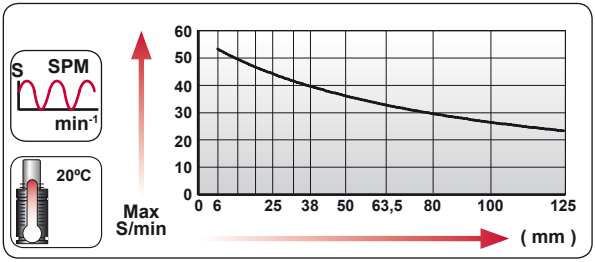


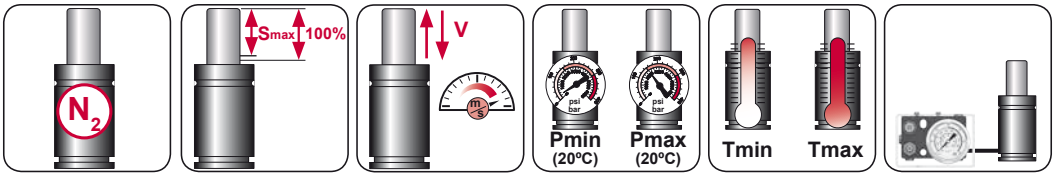


| $N_2$ | Smax < 90% | Vmax 1,6 m/s | bar psi 20 290 | bar psi 150 2175 | °C °F 0 32 | °C °F 80 176 | 600 CP- |
|---|---|---|---|---|---|---|---|

AZOL GAS

# FD 500 MOUNTS

*Low Profile*

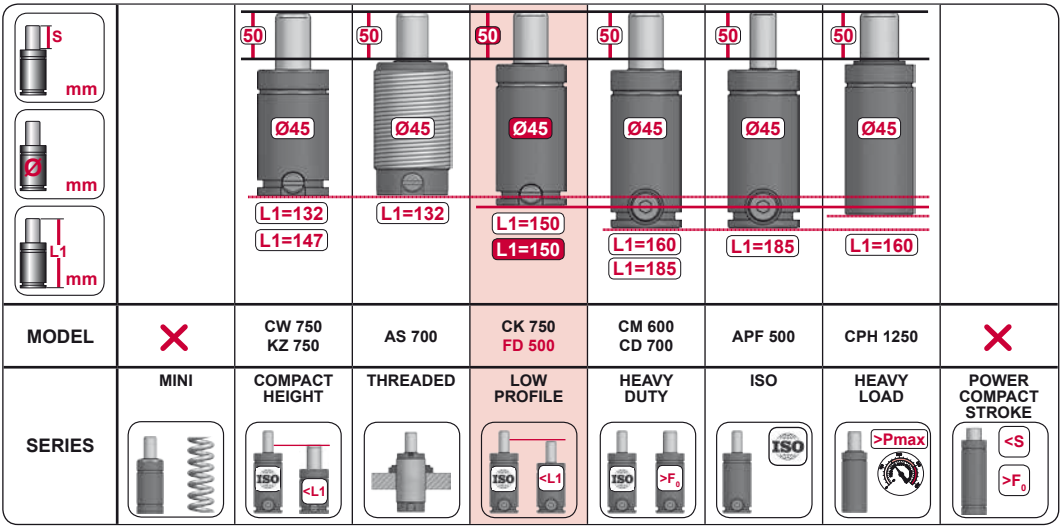


| MODEL | | CW 750 KZ 750 | AS 700 | CK 750 FD 500 | CM 600 CD 700 | APF 500 | CPH 1250 | |
|---|---|---|---|---|---|---|---|---|
| SERIES | MINI | COMPACT HEIGHT | THREADED | LOW PROFILE | HEAVY DUTY | ISO | HEAVY LOAD | POWER COMPACT STROKE |

## A14-045

ISO · E24.54.815.G · EM24.54.700/F

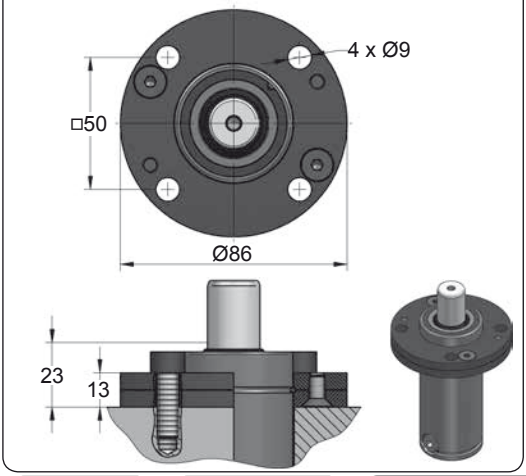


## A34-045

ISO · VDI

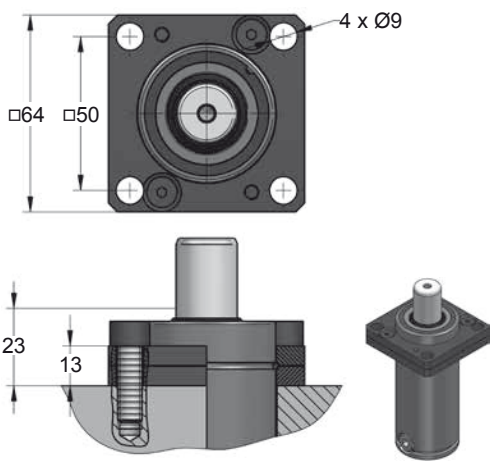









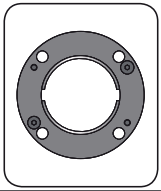

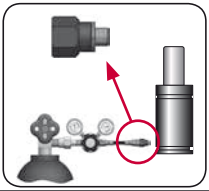

| CODE | | FD 500 050 | KIT XXXXXXX-S KIT XXXXXXX-C | A14-045 | 18 GA 5 |
|---|---|---|---|---|---|
| ENG | ORDER | GAS SPRING | REPAIR KIT | FLANGE | CHARGING ADAPTER |
| DEU | BESTELLUNG | GASDRUCKFEDER | ERSATZTEILSATZ | FLANSCHE | LADEADAPTER |
| FRA | COMMANDE | RESSORT À GAZ | KIT DE RÉPARATION | BRIDE | RACCORD DE CHARGE |
| ITA | ORDINE | CILINDRO AD AZOTO | KIT DI MANUTENZIONE | FLANGE | ADATTATORE DI CARICO |
| ESP | PEDIDO | RESORTE DE GAS | KIT DE REPARACION | BRIDA | ADAPTADOR DE CARGA |
| POR | PEDIDO | CILINDRO DE GÁS | KIT DE MANUTENÇÃO | FLANGE | ADAPTADOR DE CARGA |

# FD 500 MOUNTS

*Low Profile*

AZOL GAS

## B21-045

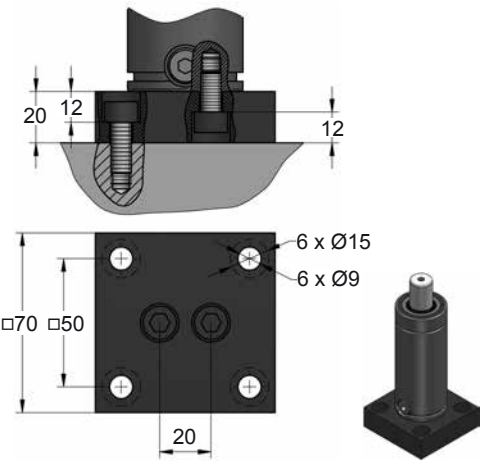


## B51-045

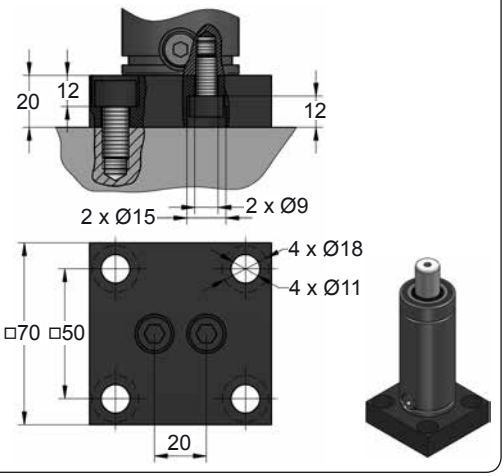


## B76-045

ISO E24.54.815.G

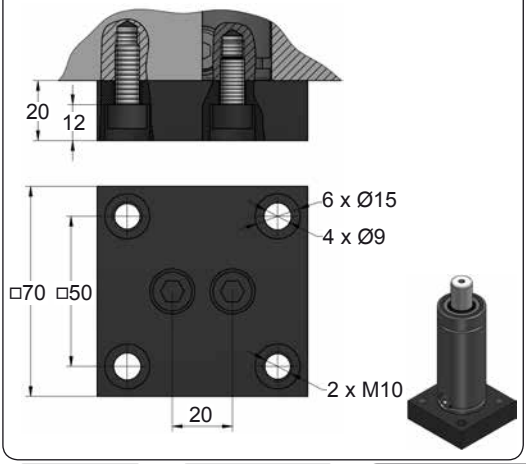









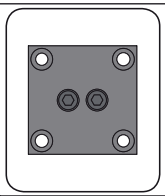

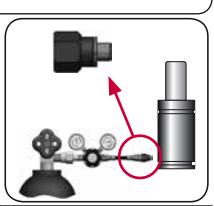

| CODE | | FD 500 050 | KIT XXXXXXX-S<br>KIT XXXXXXX-C | B21-045 | 18 GA 5 |
|---|---|---|---|---|---|
| ENG | ORDER | GAS SPRING | REPAIR KIT | FLANGE | CHARGING ADAPTER |
| DEU | BESTELLUNG | GASDRUCKFEDER | ERSATZTEILSATZ | FLANSCHE | LADEADAPTER |
| FRA | COMMANDE | RESSORT À GAZ | KIT DE RÉPARATION | BRIDE | RACCORD DE CHARGE |
| ITA | ORDINE | CILINDRO AD AZOTO | KIT DI MANUTENZIONE | FLANGE | ADATTATORE DI CARICO |
| ESP | PEDIDO | RESORTE DE GAS | KIT DE REPARACION | BRIDA | ADAPTADOR DE CARGA |
| POR | PEDIDO | CILINDRO DE GÁS | KIT DE MANUTENÇÃO | FLANGE | ADAPTADOR DE CARGA |

AZOL GAS

# FD 500 MOUNTS

*Low Profile*

## C05-045

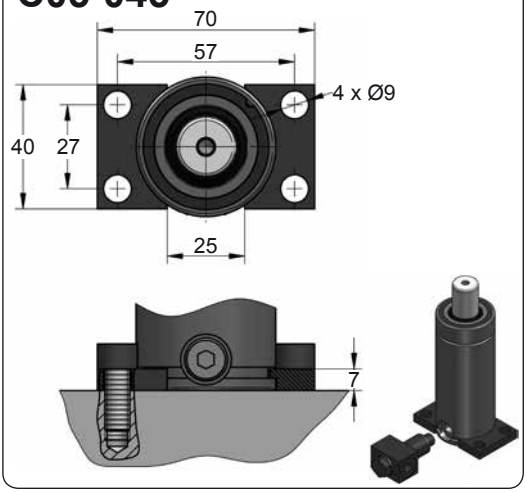


## C20-045

ISO VDI E24.54.815.G EM24.54.700/F

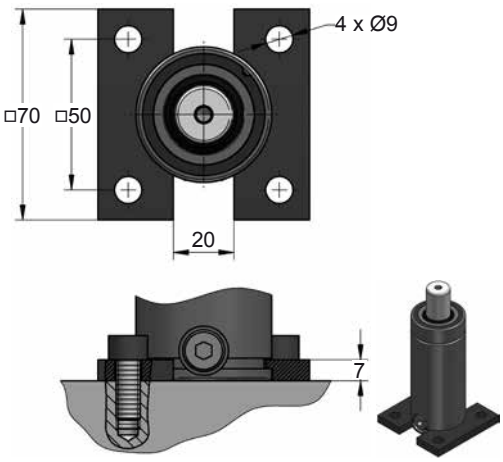


## D02-045

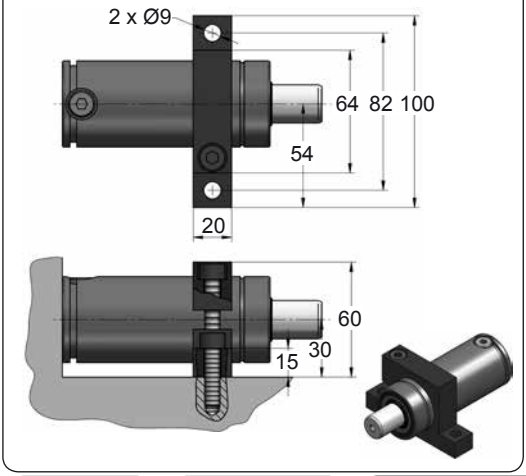


## D67-045

VDI

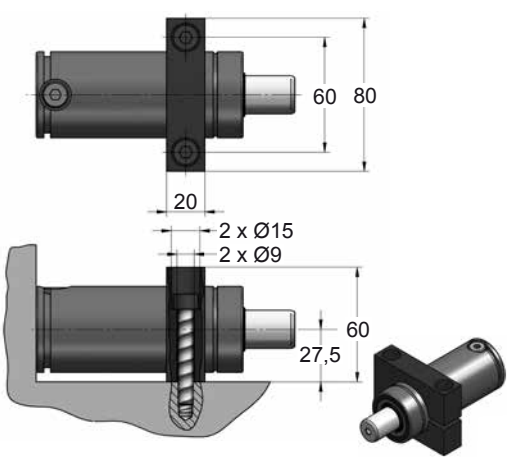









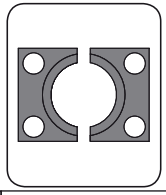

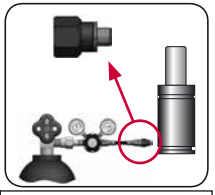

| CODE | | FD 500 050 | KIT XXXXXXX-S<br>KIT XXXXXXX-C | C05-045 | 18 GA 5 |
|---|---|---|---|---|---|
| ENG | ORDER | GAS SPRING | REPAIR KIT | FLANGE | CHARGING ADAPTER |
| DEU | BESTELLUNG | GASDRUCKFEDER | ERSATZTEILSATZ | FLANSCHE | LADEADAPTER |
| FRA | COMMANDE | RESSORT À GAZ | KIT DE RÉPARATION | BRIDE | RACCORD DE CHARGE |
| ITA | ORDINE | CILINDRO AD AZOTO | KIT DI MANUTENZIONE | FLANGE | ADATTATORE DI CARICO |
| ESP | PEDIDO | RESORTE DE GAS | KIT DE REPARACION | BRIDA | ADAPTADOR DE CARGA |
| POR | PEDIDO | CILINDRO DE GÁS | KIT DE MANUTENÇÃO | FLANGE | ADAPTADOR DE CARGA |

# FD 750

*Low Profile*

AZOL GAS

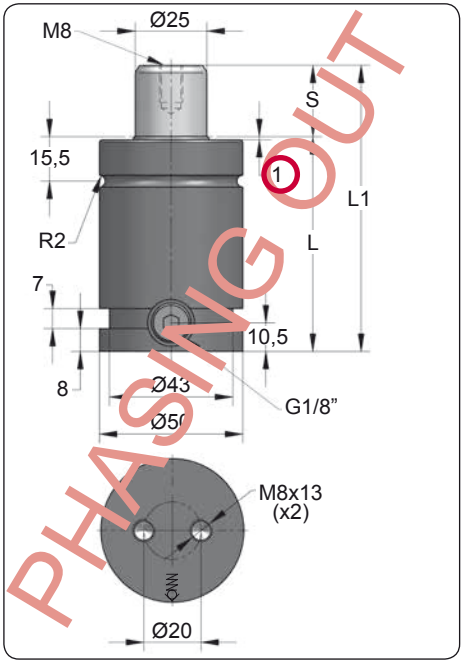


PHASING OUT

| ORDER | S (mm) | L1 ±0,25 (mm) | L (mm) | Kg. |
|---|---|---|---|---|
| FD 750 006 | 6 | 62 | 56 | 0.68 |
| FD 750 012 | 12.7 | 75.4 | 62.7 | 0.74 |
| FD 750 019 | 19 | 88 | 69 | 0.80 |
| FD 750 025 | 25 | 100 | 75 | 0.86 |
| FD 750 038 | 38 | 126 | 88 | 0.97 |
| FD 750 050 | 50 | 150 | 100 | 1.06 |
| FD 750 063 | 63.5 | 177 | 113.5 | 1.18 |
| FD 750 080 | 80 | 210 | 130 | 1.37 |
| FD 750 100 | 100 | 250 | 150 | 1.50 |
| FD 750 125 | 125 | 300 | 175 | 1.78 |

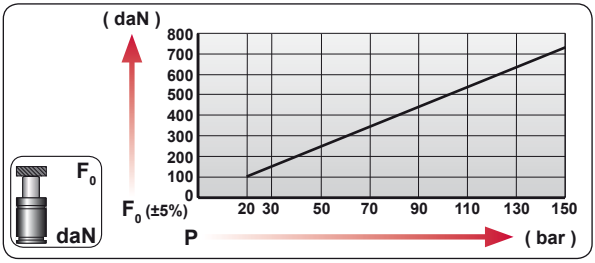


| CODE | bar | psi | F0 daN | F1 daN |
|---|---|---|---|---|
| FD 750 050 | 150 | 2175 | 740 | 1195 |
| FD-H 750 050 | 0 | 0 | --- | --- |

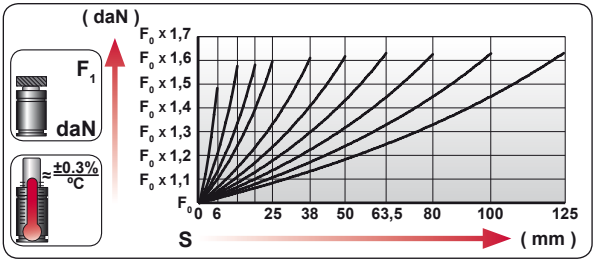


| | |
|---|---|
| ENG | ORDER |
| DEU | BESTELLUNG |
| FRA | COMMANDE |
| ITA | ORDINE |
| ESP | PEDIDO |
| POR | PEDIDO |

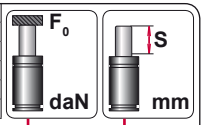


FD 750 50

FD 750 050

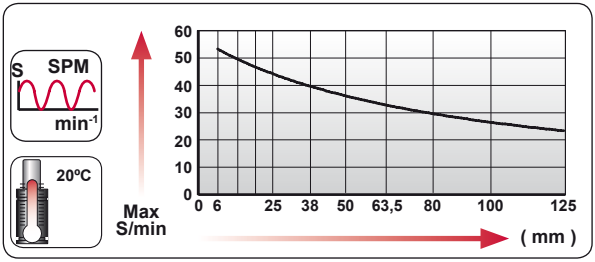


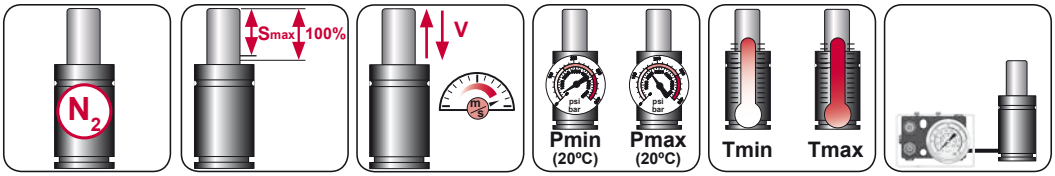


| $N_2$ | Smax < 90% | Vmax 1,6 m/s | bar psi 20 290 | bar psi 150 2175 | °C °F 0 32 | °C °F 80 176 | 600 CP- |
|---|---|---|---|---|---|---|---|

AZOL GAS

# FD 750 MOUNTS

*Low Profile*

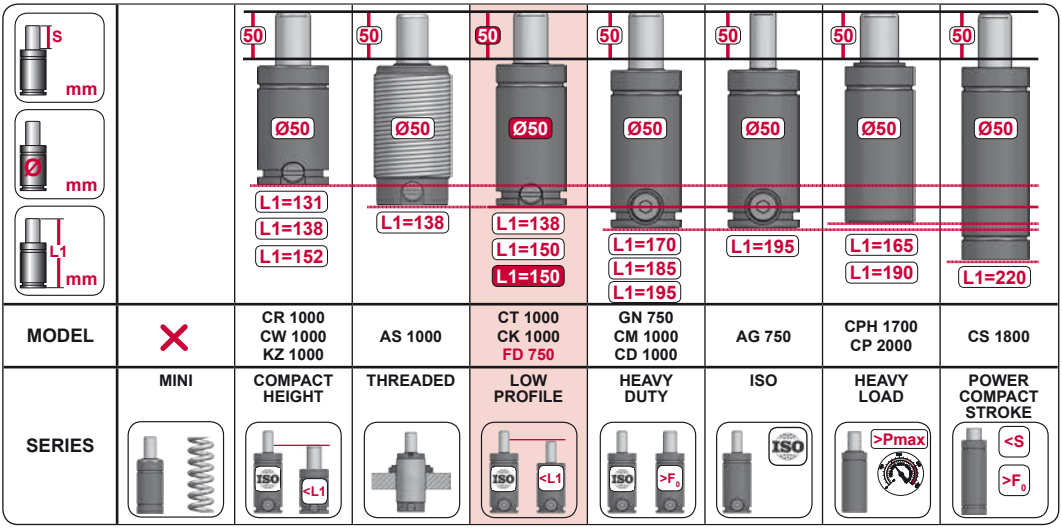


| MODEL | | CR 1000 CW 1000 KZ 1000 | AS 1000 | CT 1000 CK 1000 FD 750 | GN 750 CM 1000 CD 1000 | AG 750 | CPH 1700 CP 2000 | CS 1800 |
|---|---|---|---|---|---|---|---|---|
| SERIES | MINI | COMPACT HEIGHT | THREADED | LOW PROFILE | HEAVY DUTY | ISO | HEAVY LOAD | POWER COMPACT STROKE |




| CODE | | FD 750 050 | KIT XXXXXXX-S KIT XXXXXXX-C | A14-050 | 18 GA 5 |
|---|---|---|---|---|---|
| ENG | ORDER | GAS SPRING | REPAIR KIT | FLANGE | CHARGING ADAPTER |
| DEU | BESTELLUNG | GASDRUCKFEDER | ERSATZTEILSATZ | FLANSCHE | LADEADAPTER |
| FRA | COMMANDE | RESSORT À GAZ | KIT DE RÉPARATION | BRIDE | RACCORD DE CHARGE |
| ITA | ORDINE | CILINDRO AD AZOTO | KIT DI MANUTENZIONE | FLANGE | ADATTATORE DI CARICO |
| ESP | PEDIDO | RESORTE DE GAS | KIT DE REPARACION | BRIDA | ADAPTADOR DE CARGA |
| POR | PEDIDO | CILINDRO DE GÁS | KIT DE MANUTENÇÃO | FLANGE | ADAPTADOR DE CARGA |

# FD 750 V1

*Low Profile*

| | | |
|---|---|---|
| MB B8 3180 220 000 003 | | RENAULT EM24.54.700 |

AZOL GAS

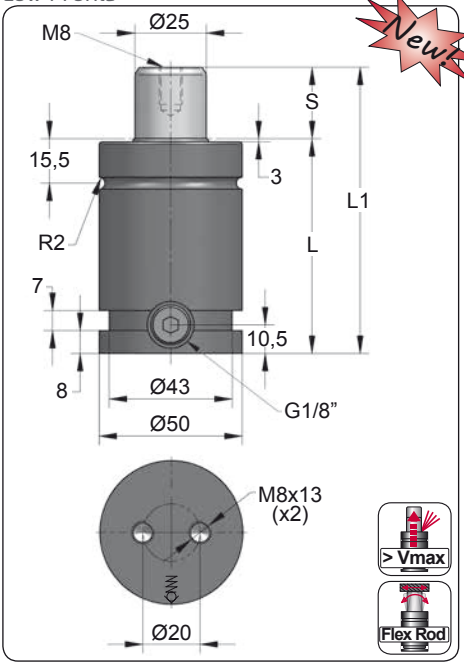


Newt

| ORDER | S (mm) | L1 ±0,25 (mm) | L (mm) | Kg. |
|---|---|---|---|---|
| FD 750 006 V1 | 6 | 62 | 56 | 0.68 |
| FD 750 012 V1 | 12.7 | 75.4 | 62.7 | 0.74 |
| FD 750 019 V1 | 19 | 88 | 69 | 0.80 |
| FD 750 025 V1 | 25 | 100 | 75 | 0.86 |
| FD 750 032 V1 | 32 | 114 | 82 | 0.92 |
| FD 750 038 V1 | 38 | 126 | 88 | 0.97 |
| FD 750 050 V1 | 50 | 150 | 100 | 1.06 |
| FD 750 063 V1 | 63.5 | 177 | 113.5 | 1.18 |
| FD 750 080 V1 | 80 | 210 | 130 | 1.37 |
| FD 750 100 V1 | 100 | 250 | 150 | 1.50 |
| FD 750 125 V1 | 125 | 300 | 175 | 1.78 |

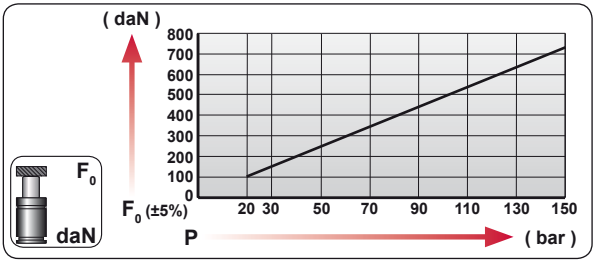


| CODE | bar | psi | F0 daN | F1 daN |
|---|---|---|---|---|
| FD 750 050 V1 | 150 | 2175 | 740 | 1195 |
| FD-H 750 050 V1 | 0 | 0 | --- | --- |

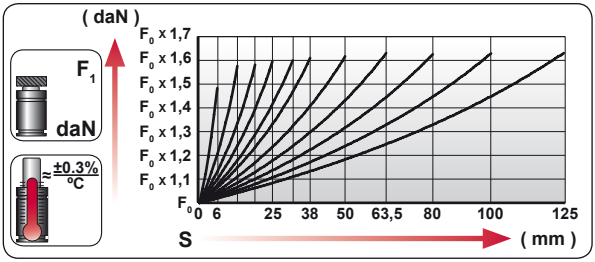


| | |
|---|---|
| ENG | ORDER |
| DEU | BESTELLUNG |
| FRA | COMMANDE |
| ITA | ORDINE |
| ESP | PEDIDO |
| POR | PEDIDO |




FD 750 50

FD 750 050 V1

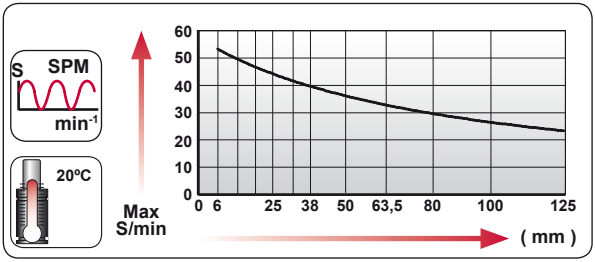


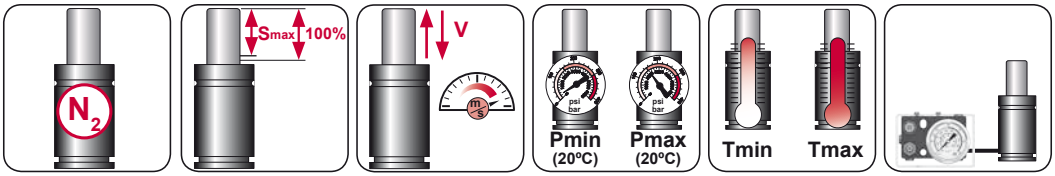


| $N_2$ | Smax < 90% | Vmax 1,6 m/s | bar psi 20 290 | bar psi 150 2175 | °C °F 0 32 | °C °F 80 176 | 600 CP- |
|---|---|---|---|---|---|---|---|

AZOL GAS

# FD 750 V1 MOUNTS

*Low Profile*

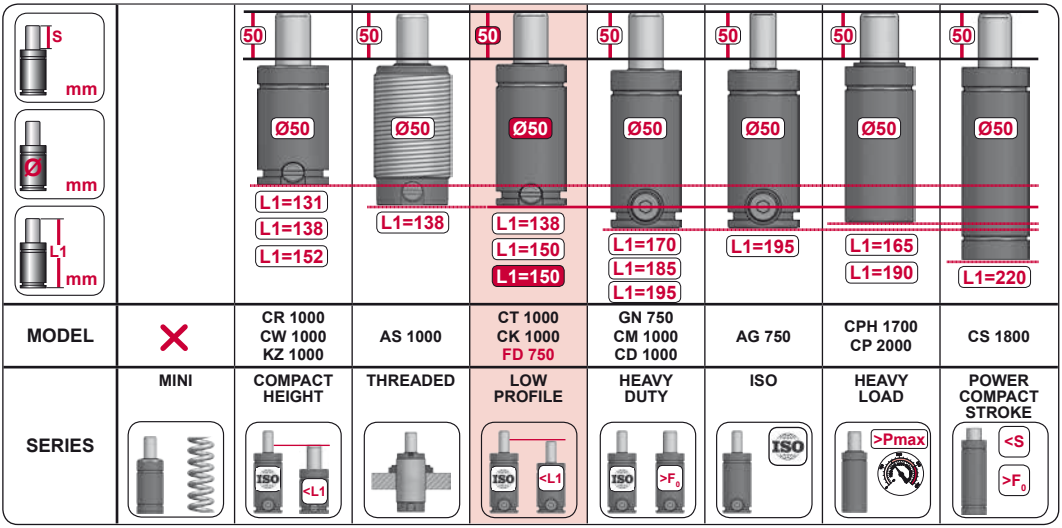


## A14-050

E24.54.815.G
EM24.54.700/F

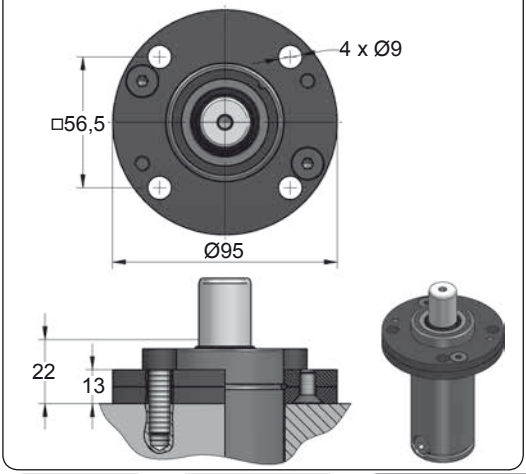


## A34-050

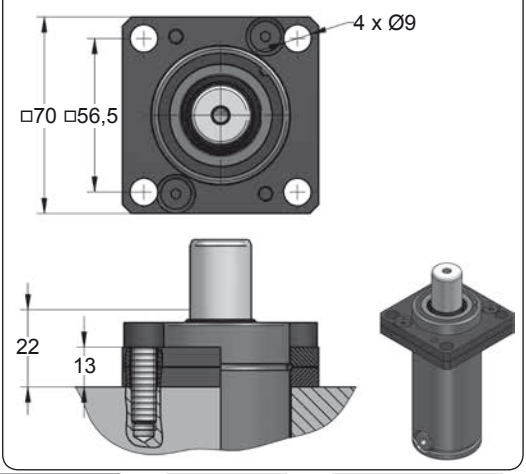





| CODE | | FD 750 050 V1 | KIT XXXXXXX-S<br>KIT XXXXXXX-C | A14-050 | 18 GA 5 |
|---|---|---|---|---|---|
| ENG | ORDER | GAS SPRING | REPAIR KIT | FLANGE | CHARGING ADAPTER |
| DEU | BESTELLUNG | GASDRUCKFEDER | ERSATZTEILSATZ | FLANSCHE | LADEADAPTER |
| FRA | COMMANDE | RESSORT À GAZ | KIT DE RÉPARATION | BRIDE | RACCORD DE CHARGE |
| ITA | ORDINE | CILINDRO AD AZOTO | KIT DI MANUTENZIONE | FLANGE | ADATTATORE DI CARICO |
| ESP | PEDIDO | RESORTE DE GAS | KIT DE REPARACION | BRIDA | ADAPTADOR DE CARGA |
| POR | PEDIDO | CILINDRO DE GÁS | KIT DE MANUTENÇÃO | FLANGE | ADAPTADOR DE CARGA |

# FD 750 V1 MOUNTS

*Low Profile*

AZOL GAS

## B21-050

EM24.54.700/F

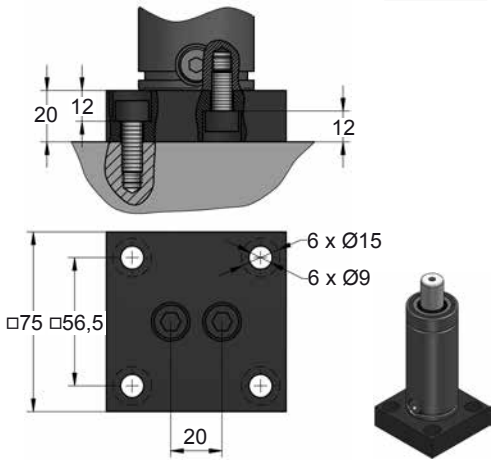


## B51-050

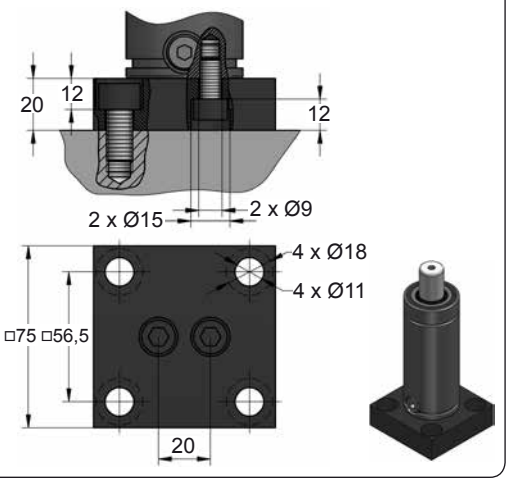


## B76-050

ISO E24.54.815.G EM24.54.700/F

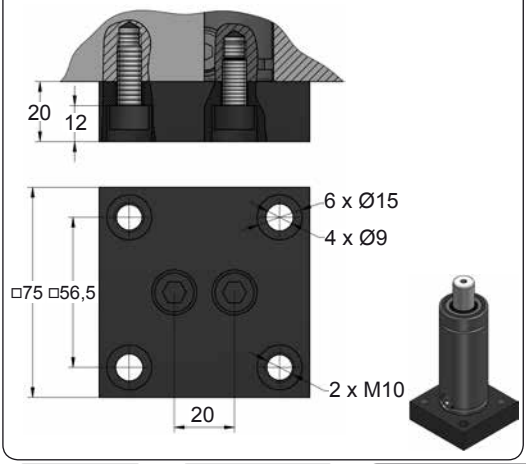









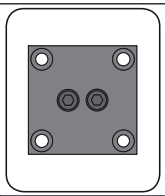

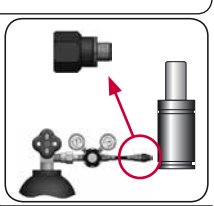

| CODE | | FD 750 050 V1 | KIT XXXXXXX-S<br>KIT XXXXXXX-C | B21-050 | 18 GA 5 |
|---|---|---|---|---|---|
| ENG | ORDER | GAS SPRING | REPAIR KIT | FLANGE | CHARGING ADAPTER |
| DEU | BESTELLUNG | GASDRUCKFEDER | ERSATZTEILSATZ | FLANSCHE | LADEADAPTER |
| FRA | COMMANDE | RESSORT À GAZ | KIT DE RÉPARATION | BRIDE | RACCORD DE CHARGE |
| ITA | ORDINE | CILINDRO AD AZOTO | KIT DI MANUTENZIONE | FLANGE | ADATTATORE DI CARICO |
| ESP | PEDIDO | RESORTE DE GAS | KIT DE REPARACION | BRIDA | ADAPTADOR DE CARGA |
| POR | PEDIDO | CILINDRO DE GÁS | KIT DE MANUTENÇÃO | FLANGE | ADAPTADOR DE CARGA |

AZOL GAS

# FD 750 V1 MOUNTS

*Low Profile*

## C05-050

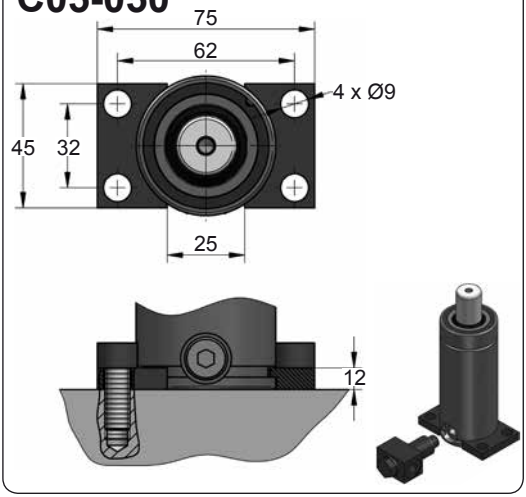


## C20-050

ISO VDI E24.54.815.G EM24.54.700/F

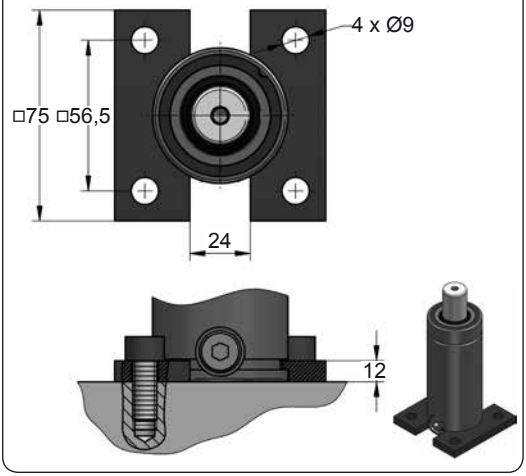


## D02-050

ISO E24.54.815.G EM24.54.700/F

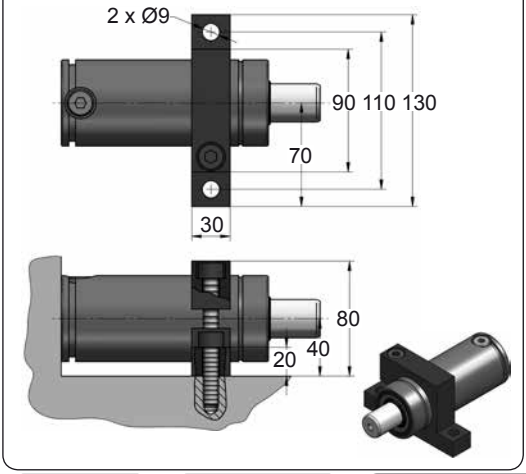


## D67-050

VDI

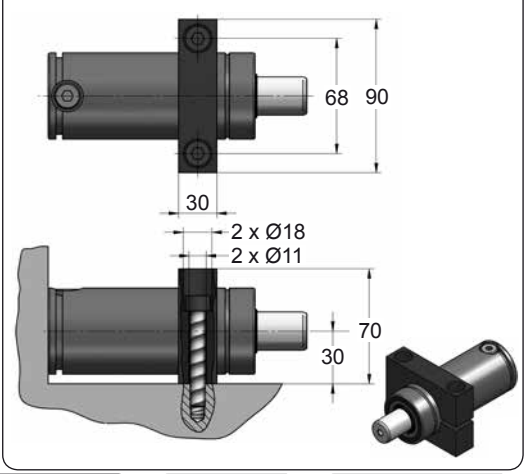









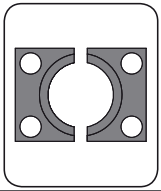

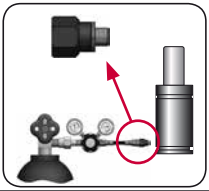

| CODE | | FD 750 050 V1 | KIT XXXXXXX-S<br>KIT XXXXXXX-C | C05-050 | 18 GA 5 |
|---|---|---|---|---|---|
| ENG | ORDER | GAS SPRING | REPAIR KIT | FLANGE | CHARGING ADAPTER |
| DEU | BESTELLUNG | GASDRUCKFEDER | ERSATZTEILSATZ | FLANSCHE | LADEADAPTER |
| FRA | COMMANDE | RESSORT À GAZ | KIT DE RÉPARATION | BRIDE | RACCORD DE CHARGE |
| ITA | ORDINE | CILINDRO AD AZOTO | KIT DI MANUTENZIONE | FLANGE | ADATTATORE DI CARICO |
| ESP | PEDIDO | RESORTE DE GAS | KIT DE REPARACION | BRIDA | ADAPTADOR DE CARGA |
| POR | PEDIDO | CILINDRO DE GÁS | KIT DE MANUTENÇÃO | FLANGE | ADAPTADOR DE CARGA |

# FD 1500 V1

*Low Profile*

AZOL GAS

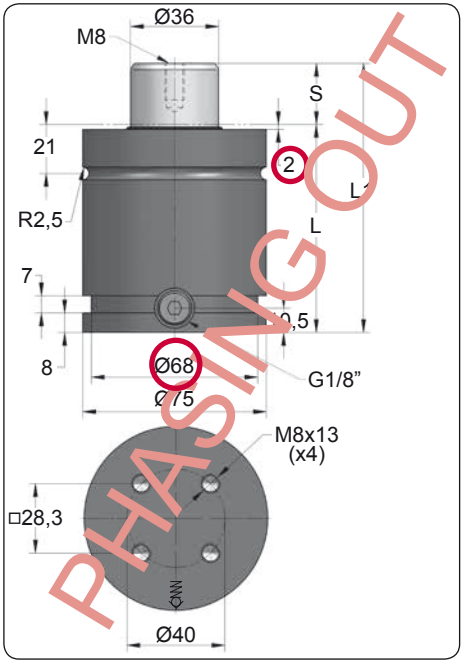


| ORDER | S (mm) | L1 ±0,25 (mm) | L (mm) | Kg. |
|---|---|---|---|---|
| FD 1500 025 V1 | 25 | 110 | 85 | 2.11 |
| FD 1500 038 V1 | 38 | 136 | 98 | 2.31 |
| FD 1500 050 V1 | 50 | 160 | 110 | 2.50 |
| FD 1500 063 V1 | 63.5 | 187 | 123.5 | 2.70 |
| FD 1500 080 V1 | 80 | 220 | 140 | 3.04 |
| FD 1500 100 V1 | 100 | 260 | 160 | 3.80 |

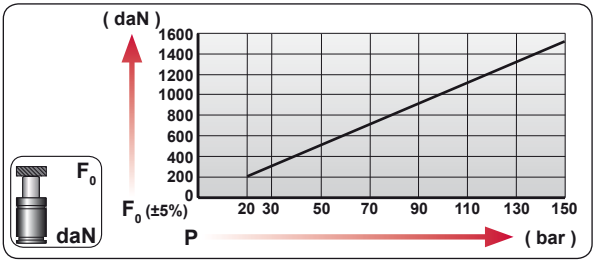


| CODE | bar | psi | F0 daN | F1 daN |
|---|---|---|---|---|
| FD 1500 050 V1 | 150 | 2145 | 1530 | 2140 |
| FD-H 1500 050 V1 | 0 | 0 | --- | --- |

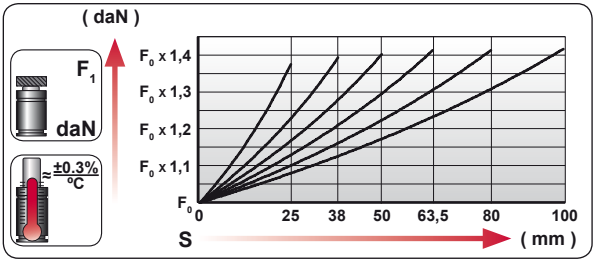


| | |
|---|---|
| ENG | ORDER |
| DEU | BESTELLUNG |
| FRA | COMMANDE |
| ITA | ORDINE |
| ESP | PEDIDO |
| POR | PEDIDO |

F0 daN — S mm

FD 1500 50

FD 1500 050 V1

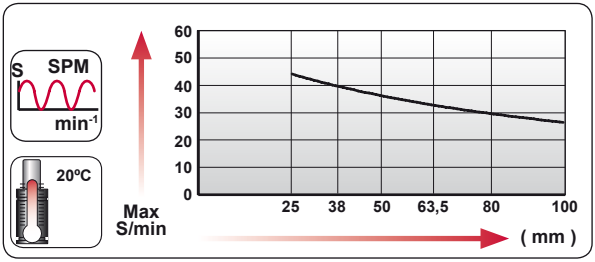


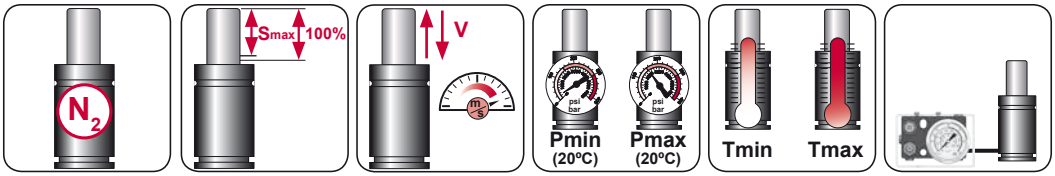


| $N_2$ | Smax < 90% | Vmax 1,6 m/s | bar psi 20 290 | bar psi 150 2175 | ºC ºF 0 32 | ºC ºF 80 176 | 600 CP- |
|---|---|---|---|---|---|---|---|

AZOL GAS

# FD 1500 V1 *MOUNTS*

*Low Profile*

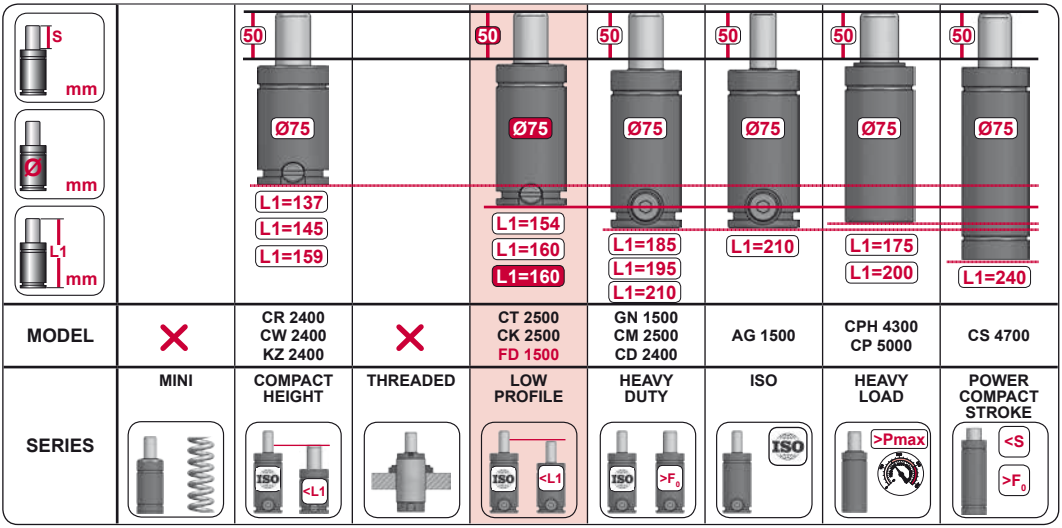


| | | | | | | | | |
|---|---|---|---|---|---|---|---|---|
| **MODEL** | ✕ | CR 2400<br>CW 2400<br>KZ 2400 | ✕ | CT 2500<br>CK 2500<br>FD 1500 | GN 1500<br>CM 2500<br>CD 2400 | AG 1500 | CPH 4300<br>CP 5000 | CS 4700 |
| **SERIES** | MINI | COMPACT HEIGHT | THREADED | LOW PROFILE | HEAVY DUTY | ISO | HEAVY LOAD | POWER COMPACT STROKE |




| CODE | | FD 1500 050 V1 | KIT XXXXXXX-S<br>KIT XXXXXXX-C | A14-075 | 18 GA 5 |
|---|---|---|---|---|---|
| ENG | ORDER | GAS SPRING | REPAIR KIT | FLANGE | CHARGING ADAPTER |
| DEU | BESTELLUNG | GASDRUCKFEDER | ERSATZTEILSATZ | FLANSCHE | LADEADAPTER |
| FRA | COMMANDE | RESSORT À GAZ | KIT DE RÉPARATION | BRIDE | RACCORD DE CHARGE |
| ITA | ORDINE | CILINDRO AD AZOTO | KIT DI MANUTENZIONE | FLANGE | ADATTATORE DI CARICO |
| ESP | PEDIDO | RESORTE DE GAS | KIT DE REPARACION | BRIDA | ADAPTADOR DE CARGA |
| POR | PEDIDO | CILINDRO DE GÁS | KIT DE MANUTENÇÃO | FLANGE | ADAPTADOR DE CARGA |

# FD 1500 V2

*Low Profile*

| | | |
|---|---|---|
| | | |
| | | |
| | | **RENAULT** EM24.54.700 |

AZOL GAS

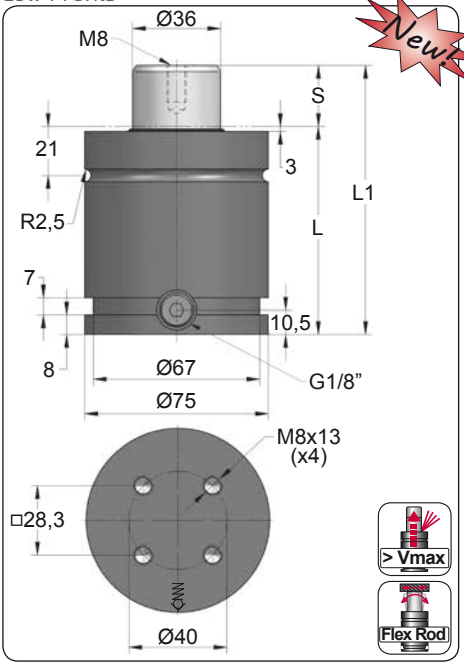


| ORDER | S (mm) | L1 ±0,25 (mm) | L (mm) | Kg. |
|---|---|---|---|---|
| FD 1500 025 V2 | 25 | 110 | 85 | 2.11 |
| FD 1500 032 V2 | 32 | 124 | 92 | 2.22 |
| FD 1500 038 V2 | 38 | 136 | 98 | 2.31 |
| FD 1500 050 V2 | 50 | 160 | 110 | 2.50 |
| FD 1500 063 V2 | 63.5 | 187 | 123.5 | 2.70 |
| FD 1500 080 V2 | 80 | 220 | 140 | 3.04 |
| FD 1500 100 V2 | 100 | 260 | 160 | 3.80 |
| FD 1500 125 V2 | 125 | 310 | 185 | 4.75 |

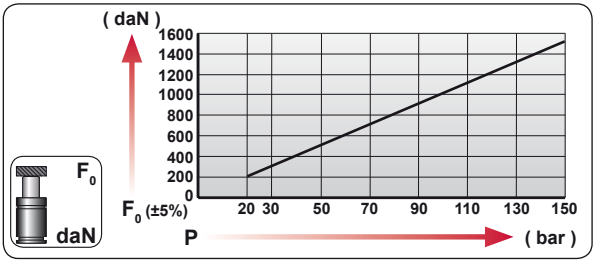


| CODE | bar | psi | $F_0$ daN | $F_1$ daN |
|---|---|---|---|---|
| FD 1500 050 V2 | 150 | 2145 | 1530 | 2140 |
| FD-H 1500 050 V2 | 0 | 0 | --- | --- |

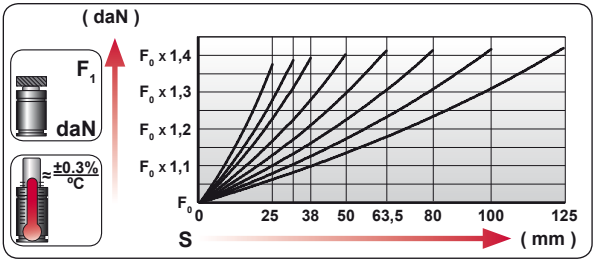


| | |
|---|---|
| ENG | ORDER |
| DEU | BESTELLUNG |
| FRA | COMMANDE |
| ITA | ORDINE |
| ESP | PEDIDO |
| POR | PEDIDO |

$F_0$ daN — S mm

FD 1500 50

FD 1500 050 V2

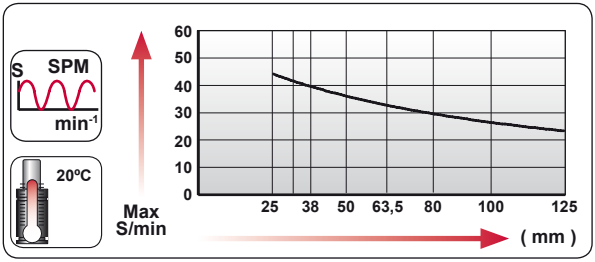


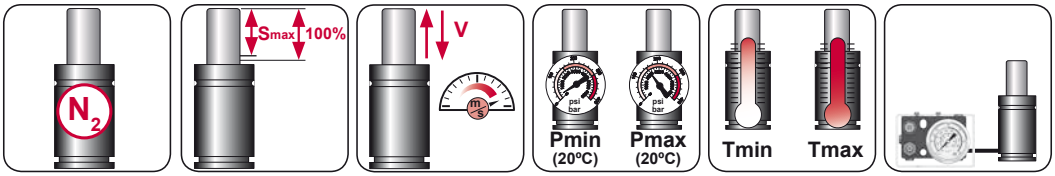


| $N_2$ | Smax < 90% | Vmax 1,6 m/s | bar psi 20 290 | bar psi 150 2175 | ºC ºF 0 32 | ºC ºF 80 176 | 600 CP- |
|---|---|---|---|---|---|---|---|

AZOL GAS

# FD 1500 V2 MOUNTS

*Low Profile*

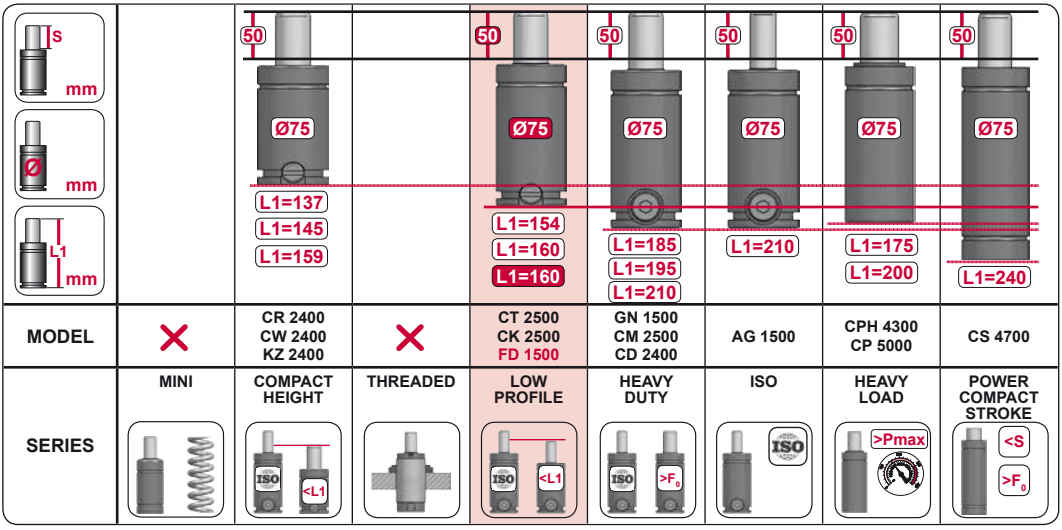


| | | | | | | | | |
|---|---|---|---|---|---|---|---|---|
| **MODEL** | ✕ | CR 2400<br>CW 2400<br>KZ 2400 | ✕ | CT 2500<br>CK 2500<br>FD 1500 | GN 1500<br>CM 2500<br>CD 2400 | AG 1500 | CPH 4300<br>CP 5000 | CS 4700 |
| **SERIES** | MINI | COMPACT HEIGHT | THREADED | LOW PROFILE | HEAVY DUTY | ISO | HEAVY LOAD | POWER COMPACT STROKE |

## A14-075

ISO E24.54.815.G EM24.54.700/F

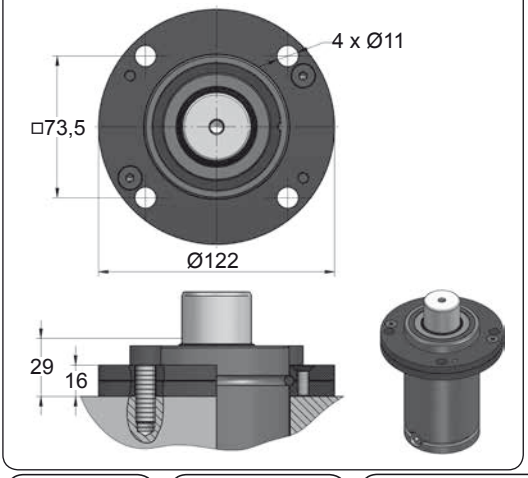


## A34-075

ISO VDI

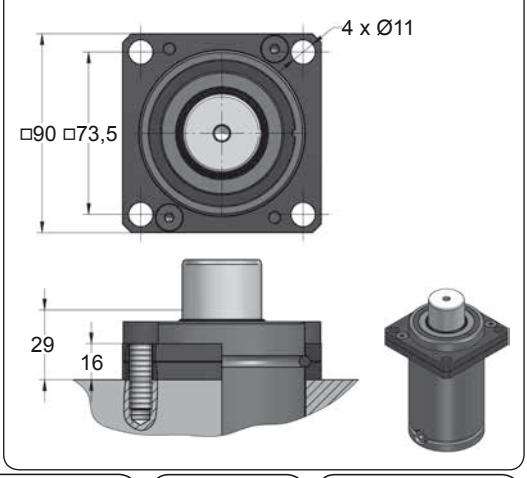









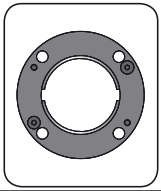

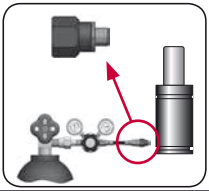

| CODE | | FD 1500 050 V2 | KIT XXXXXXX-S<br>KIT XXXXXXX-C | A14-075 | 18 GA 5 |
|---|---|---|---|---|---|
| ENG | ORDER | GAS SPRING | REPAIR KIT | FLANGE | CHARGING ADAPTER |
| DEU | BESTELLUNG | GASDRUCKFEDER | ERSATZTEILSATZ | FLANSCHE | LADEADAPTER |
| FRA | COMMANDE | RESSORT À GAZ | KIT DE RÉPARATION | BRIDE | RACCORD DE CHARGE |
| ITA | ORDINE | CILINDRO AD AZOTO | KIT DI MANUTENZIONE | FLANGE | ADATTATORE DI CARICO |
| ESP | PEDIDO | RESORTE DE GAS | KIT DE REPARACION | BRIDA | ADAPTADOR DE CARGA |
| POR | PEDIDO | CILINDRO DE GÁS | KIT DE MANUTENÇÃO | FLANGE | ADAPTADOR DE CARGA |

# FD 1500 V2 MOUNTS

*Low Profile*

AZOL GAS

## B21-075

EM24.54.700/F

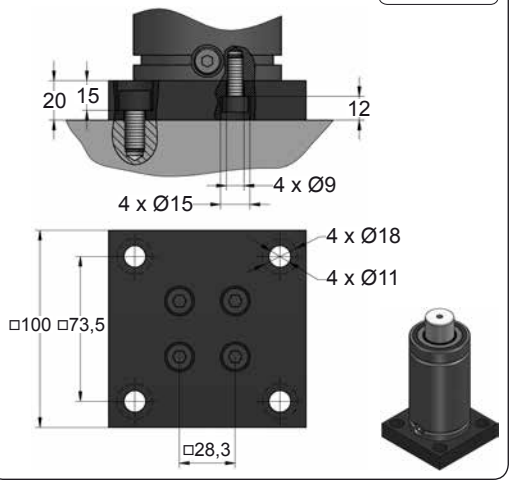


## B76-075

ISO

E24.54.815.G
EM24.54.700/F

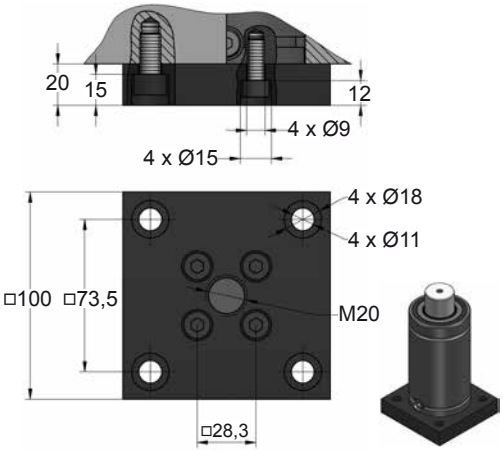


## C05-075

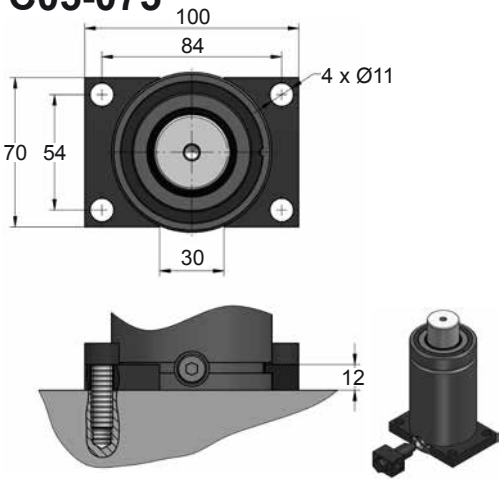


## C20-075

ISO VDI

E24.54.815.G
EM24.54.700/F

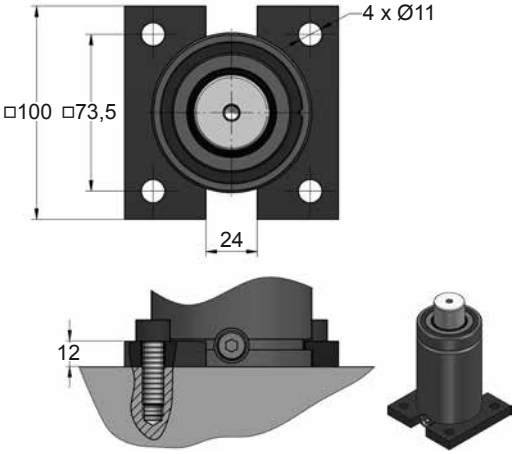









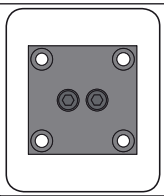

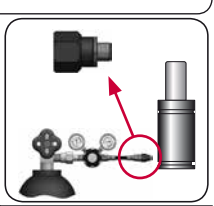

| CODE | | FD 1500 050 V2 | KIT XXXXXXX-S<br>KIT XXXXXXX-C | B21-075 | 18 GA 5 |
|---|---|---|---|---|---|
| ENG | ORDER | GAS SPRING | REPAIR KIT | FLANGE | CHARGING ADAPTER |
| DEU | BESTELLUNG | GASDRUCKFEDER | ERSATZTEILSATZ | FLANSCHE | LADEADAPTER |
| FRA | COMMANDE | RESSORT À GAZ | KIT DE RÉPARATION | BRIDE | RACCORD DE CHARGE |
| ITA | ORDINE | CILINDRO AD AZOTO | KIT DI MANUTENZIONE | FLANGE | ADATTATORE DI CARICO |
| ESP | PEDIDO | RESORTE DE GAS | KIT DE REPARACION | BRIDA | ADAPTADOR DE CARGA |
| POR | PEDIDO | CILINDRO DE GÁS | KIT DE MANUTENÇÃO | FLANGE | ADAPTADOR DE CARGA |

AZOL GAS

# FD 1500 V2 MOUNTS

*Low Profile*

## D02-075

ISO E24.54.815.G
EM24.54.700/F

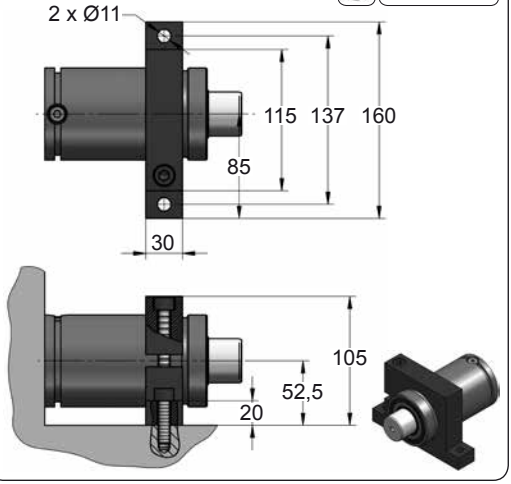


## D67-075

VDI

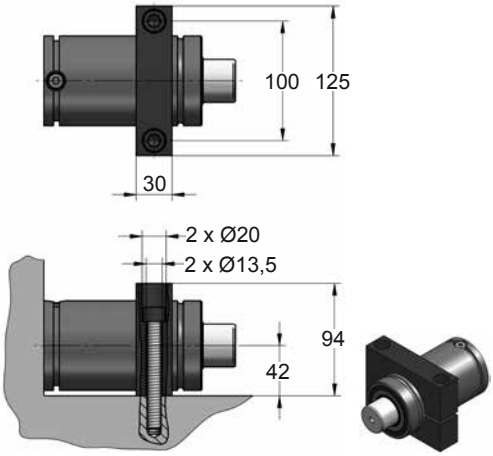









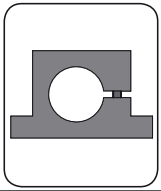

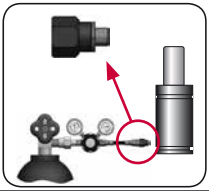

| CODE | | FD 1500 050 V2 | KIT XXXXXXX-S<br>KIT XXXXXXX-C | D02-075 | 18 GA 5 |
|---|---|---|---|---|---|
| ENG | ORDER | GAS SPRING | REPAIR KIT | FLANGE | CHARGING ADAPTER |
| DEU | BESTELLUNG | GASDRUCKFEDER | ERSATZTEILSATZ | FLANSCHE | LADEADAPTER |
| FRA | COMMANDE | RESSORT À GAZ | KIT DE RÉPARATION | BRIDE | RACCORD DE CHARGE |
| ITA | ORDINE | CILINDRO AD AZOTO | KIT DI MANUTENZIONE | FLANGE | ADATTATORE DI CARICO |
| ESP | PEDIDO | RESORTE DE GAS | KIT DE REPARACION | BRIDA | ADAPTADOR DE CARGA |
| POR | PEDIDO | CILINDRO DE GÁS | KIT DE MANUTENÇÃO | FLANGE | ADAPTADOR DE CARGA |

# FD 3000

*Low Profile*

| | | |
|---|---|---|
| **MB** B8 3180 220 000 003 | | **RENAULT** EM24.54.700 |

AZOL GAS

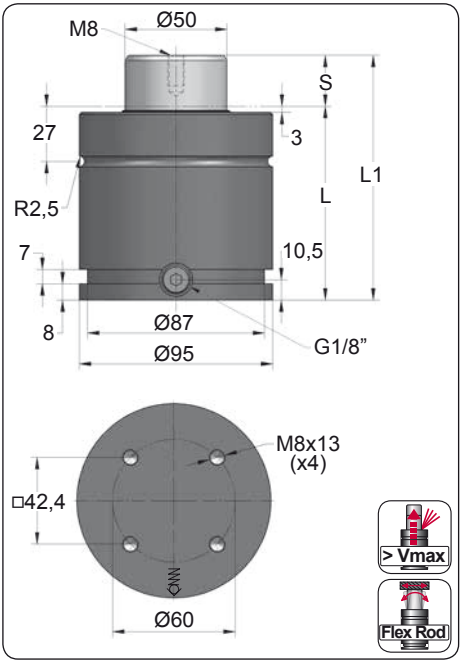


| ORDER | S (mm) | L1 ±0,25 (mm) | L (mm) | Kg. |
|---|---|---|---|---|
| FD 3000 025 | 25 | 120 | 95 | 3.93 |
| FD 3000 032 | 32 | 134 | 102 | 4.09 |
| FD 3000 038 | 38 | 146 | 108 | 4.22 |
| FD 3000 050 | 50 | 170 | 120 | 4.52 |
| FD 3000 063 | 63.5 | 197 | 133.5 | 4.84 |
| FD 3000 080 | 80 | 230 | 150 | 5.28 |
| FD 3000 100 | 100 | 270 | 170 | 5.73 |
| FD 3000 125 | 125 | 320 | 195 | 6.29 |

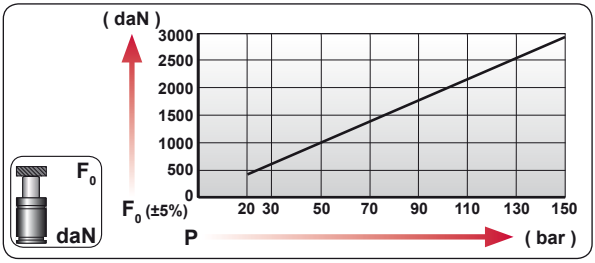


| CODE | bar | psi | $F_0$ daN | $F_1$ daN |
|---|---|---|---|---|
| FD 3000 050 | 150 | 2175 | 2945 | 4340 |
| FD-H 3000 050 | 0 | 0 | --- | --- |

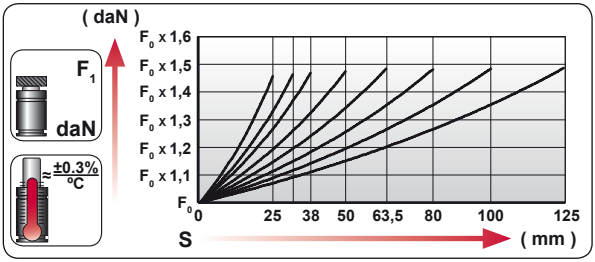


| ENG | ORDER |
|---|---|
| DEU | BESTELLUNG |
| FRA | COMMANDE |
| ITA | ORDINE |
| ESP | PEDIDO |
| POR | PEDIDO |

$F_0$ daN — S mm

FD 3000 50

FD 3000 050

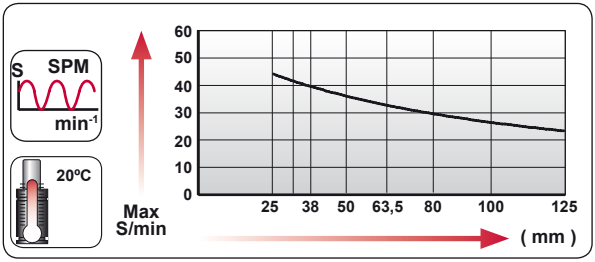


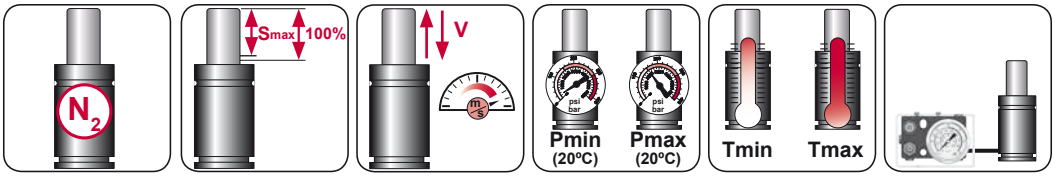


| $N_2$ | Smax < 90% | Vmax 1,6 m/s | bar psi 20 290 | bar psi 150 2175 | ºC ºF 0 32 | ºC ºF 80 176 | 600 CP- |
|---|---|---|---|---|---|---|---|

AZOL GAS

# FD 3000 MOUNTS

*Low Profile*

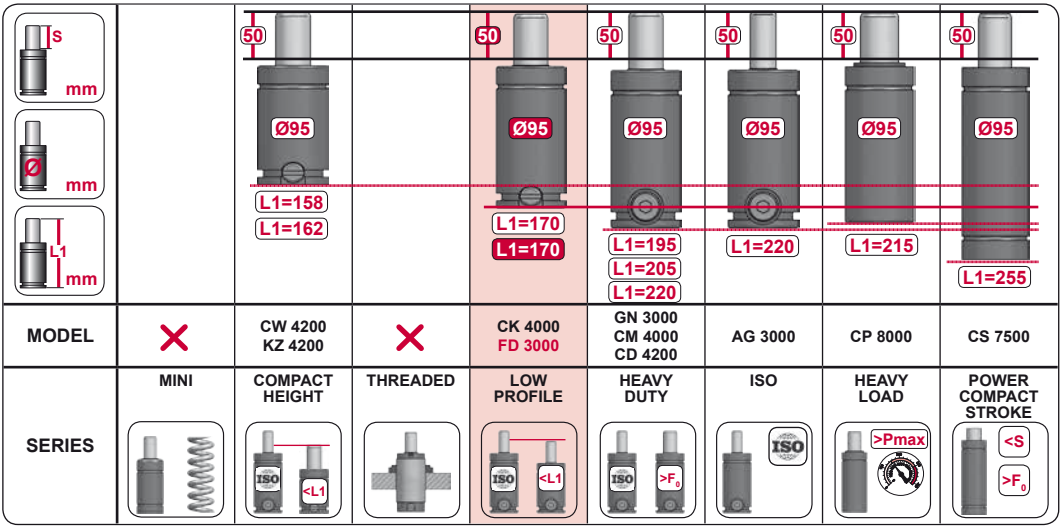


| | | | | | | | | |
|---|---|---|---|---|---|---|---|---|
| **MODEL** | ✕ | CW 4200<br>KZ 4200 | ✕ | CK 4000<br>FD 3000 | GN 3000<br>CM 4000<br>CD 4200 | AG 3000 | CP 8000 | CS 7500 |
| **SERIES** | MINI | COMPACT HEIGHT | THREADED | LOW PROFILE | HEAVY DUTY | ISO | HEAVY LOAD | POWER COMPACT STROKE |

## A14-095

ISO E24.54.815.G EM24.54.700/F

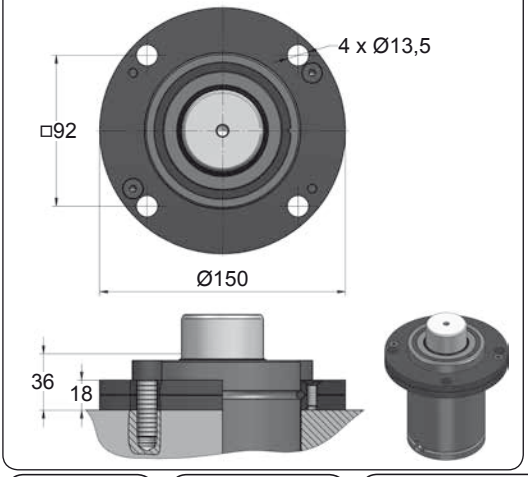


## A34-095

ISO VDI

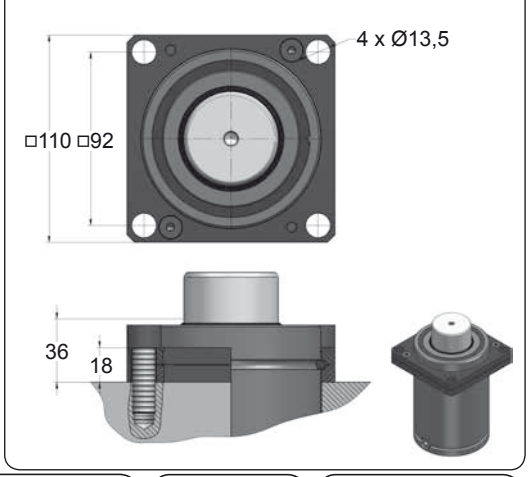









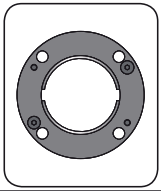

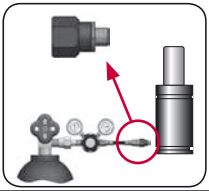

| CODE | | FD 3000 050 | KIT XXXXXXX-S<br>KIT XXXXXXX-C | A14-095 | 18 GA 5 |
|---|---|---|---|---|---|
| ENG | ORDER | GAS SPRING | REPAIR KIT | FLANGE | CHARGING ADAPTER |
| DEU | BESTELLUNG | GASDRUCKFEDER | ERSATZTEILSATZ | FLANSCHE | LADEADAPTER |
| FRA | COMMANDE | RESSORT À GAZ | KIT DE RÉPARATION | BRIDE | RACCORD DE CHARGE |
| ITA | ORDINE | CILINDRO AD AZOTO | KIT DI MANUTENZIONE | FLANGE | ADATTATORE DI CARICO |
| ESP | PEDIDO | RESORTE DE GAS | KIT DE REPARACION | BRIDA | ADAPTADOR DE CARGA |
| POR | PEDIDO | CILINDRO DE GÁS | KIT DE MANUTENÇÃO | FLANGE | ADAPTADOR DE CARGA |

# FD 3000 MOUNTS

*Low Profile*

AZOL GAS

## B21-095

EM24.54.700/F

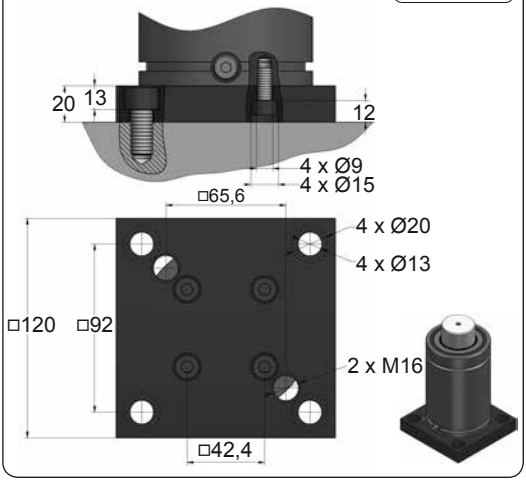


## B76-095

EM24.54.700/F

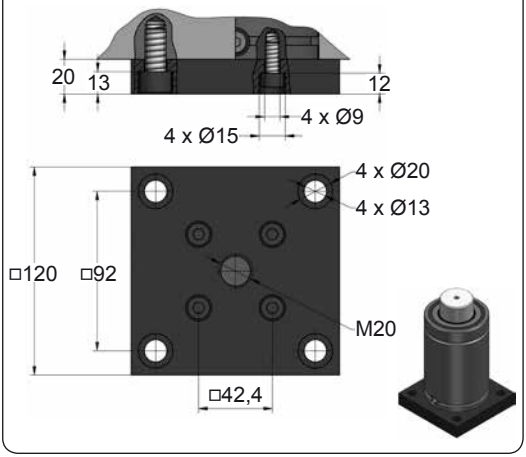


## C05-095

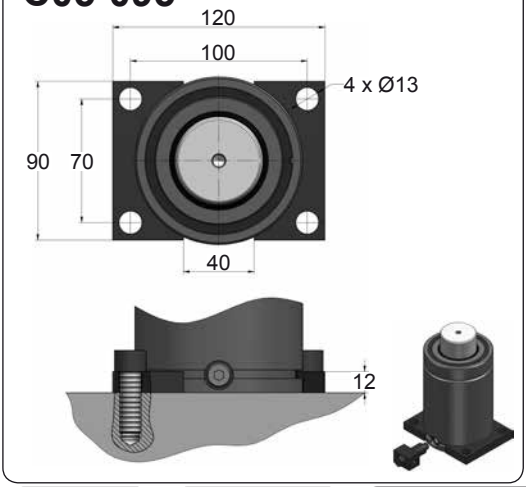


## C20-095

E24.54.815.G
EM24.54.700/F

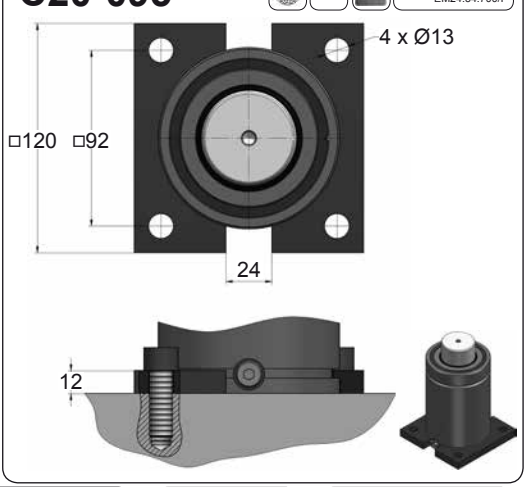









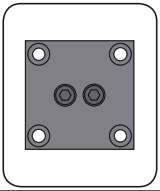

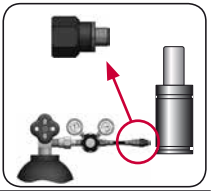

| CODE | | FD 3000 050 | KIT XXXXXXX-S<br>KIT XXXXXXX-C | B21-095 | 18 GA 5 |
|---|---|---|---|---|---|
| ENG | ORDER | GAS SPRING | REPAIR KIT | FLANGE | CHARGING ADAPTER |
| DEU | BESTELLUNG | GASDRUCKFEDER | ERSATZTEILSATZ | FLANSCHE | LADEADAPTER |
| FRA | COMMANDE | RESSORT À GAZ | KIT DE RÉPARATION | BRIDE | RACCORD DE CHARGE |
| ITA | ORDINE | CILINDRO AD AZOTO | KIT DI MANUTENZIONE | FLANGE | ADATTATORE DI CARICO |
| ESP | PEDIDO | RESORTE DE GAS | KIT DE REPARACION | BRIDA | ADAPTADOR DE CARGA |
| POR | PEDIDO | CILINDRO DE GÁS | KIT DE MANUTENÇÃO | FLANGE | ADAPTADOR DE CARGA |

AZOL GAS

# FD 3000 MOUNTS

*Low Profile*

## D02-095

ISO E24.54.815.G EM24.54.700/F

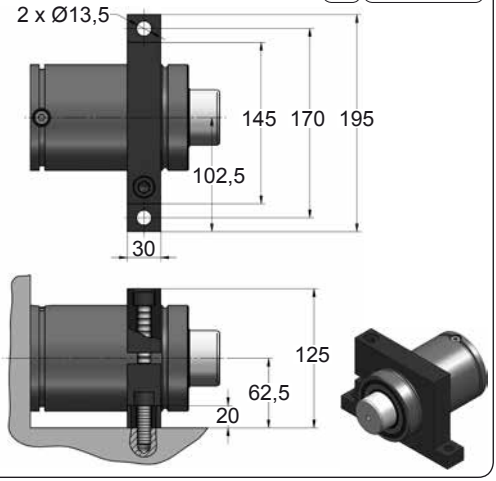


## D67-095

VDI

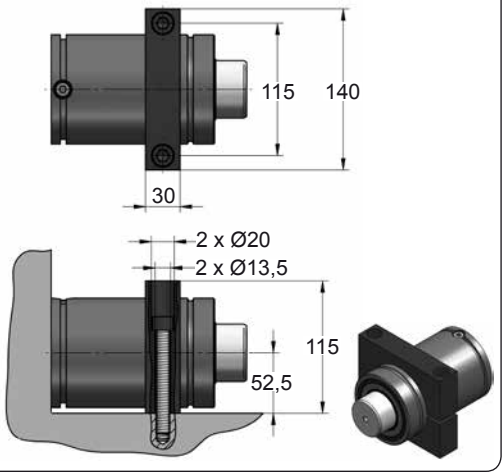









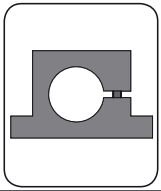

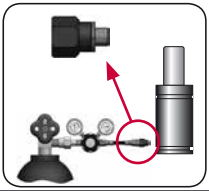

| CODE | | FD 3000 050 | KIT XXXXXXX-S<br>KIT XXXXXXX-C | D02-095 | 18 GA 5 |
|---|---|---|---|---|---|
| ENG | ORDER | GAS SPRING | REPAIR KIT | FLANGE | CHARGING ADAPTER |
| DEU | BESTELLUNG | GASDRUCKFEDER | ERSATZTEILSATZ | FLANSCHE | LADEADAPTER |
| FRA | COMMANDE | RESSORT À GAZ | KIT DE RÉPARATION | BRIDE | RACCORD DE CHARGE |
| ITA | ORDINE | CILINDRO AD AZOTO | KIT DI MANUTENZIONE | FLANGE | ADATTATORE DI CARICO |
| ESP | PEDIDO | RESORTE DE GAS | KIT DE REPARACION | BRIDA | ADAPTADOR DE CARGA |
| POR | PEDIDO | CILINDRO DE GÁS | KIT DE MANUTENÇÃO | FLANGE | ADAPTADOR DE CARGA |

# FD 5000

*Low Profile*

AZOL GAS

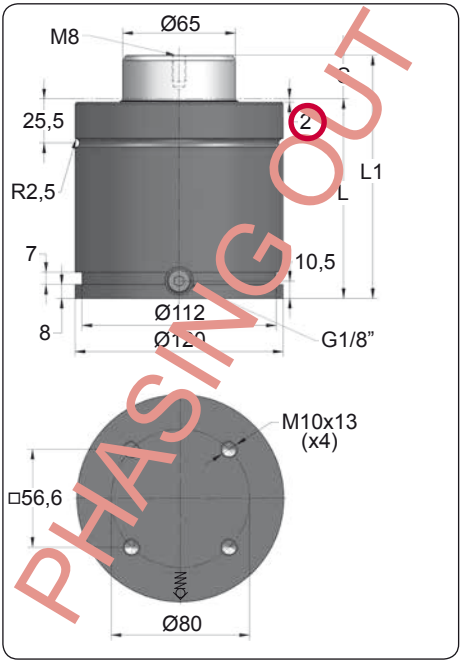


PHASING OUT

| ORDER | S (mm) | L1 ±0,25 (mm) | L (mm) | Kg. |
|---|---|---|---|---|
| FD 5000 025 | 25 | 140 | 115 | 8.53 |
| FD 5000 038 | 38 | 166 | 128 | 9.08 |
| FD 5000 050 | 50 | 190 | 140 | 9.59 |
| FD 5000 063 | 63.5 | 217 | 153.5 | 10.17 |
| FD 5000 080 | 80 | 250 | 170 | 10.87 |
| FD 5000 100 | 100 | 290 | 190 | 11.72 |

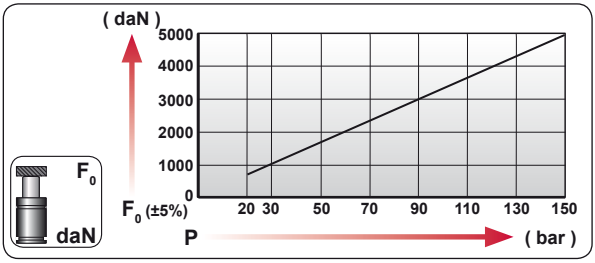


| CODE | bar | psi | $F_0$ daN | $F_1$ daN |
|---|---|---|---|---|
| FD 5000 050 | 150 | 2175 | 4980 | 8365 |
| FD-H 5000 050 | 0 | 0 | --- | --- |

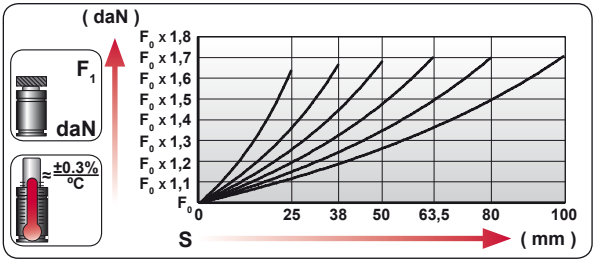


| | |
|---|---|
| ENG | ORDER |
| DEU | BESTELLUNG |
| FRA | COMMANDE |
| ITA | ORDINE |
| ESP | PEDIDO |
| POR | PEDIDO |




FD 5000 50

FD 5000 050

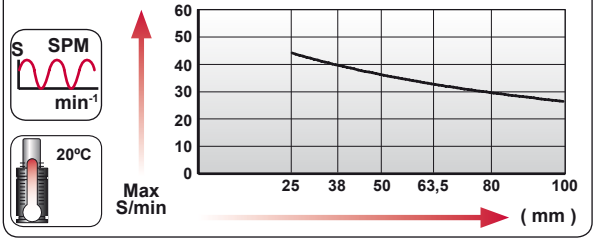


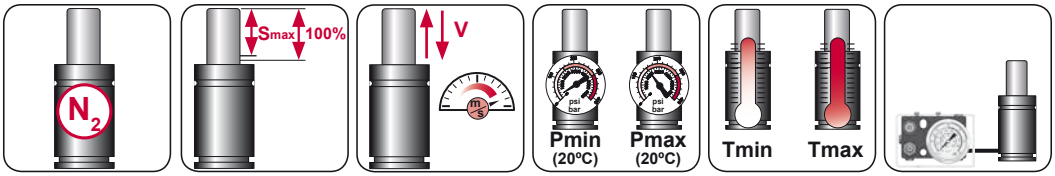


| $N_2$ | Smax < 90% | Vmax 1,6 m/s | bar psi 20 290 | bar psi 150 2175 | °C °F 0 32 | °C °F 80 176 | 600 CP- |
|---|---|---|---|---|---|---|---|

AZOL GAS

# FD 5000 MOUNTS

*Low Profile*

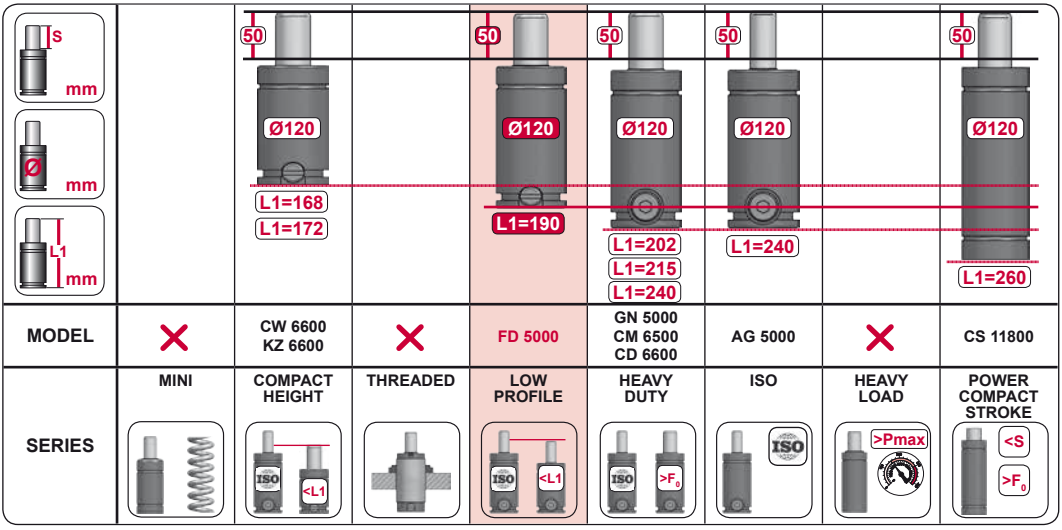


| MODEL | | CW 6600 KZ 6600 | | FD 5000 | GN 5000 CM 6500 CD 6600 | AG 5000 | | CS 11800 |
|---|---|---|---|---|---|---|---|---|
| SERIES | MINI | COMPACT HEIGHT | THREADED | LOW PROFILE | HEAVY DUTY | ISO | HEAVY LOAD | POWER COMPACT STROKE |




| CODE | | FD 5000 050 | KIT XXXXXXX-S KIT XXXXXXX-C | A14-120 | 18 GA 5 |
|---|---|---|---|---|---|
| ENG | ORDER | GAS SPRING | REPAIR KIT | FLANGE | CHARGING ADAPTER |
| DEU | BESTELLUNG | GASDRUCKFEDER | ERSATZTEILSATZ | FLANSCHE | LADEADAPTER |
| FRA | COMMANDE | RESSORT À GAZ | KIT DE RÉPARATION | BRIDE | RACCORD DE CHARGE |
| ITA | ORDINE | CILINDRO AD AZOTO | KIT DI MANUTENZIONE | FLANGE | ADATTATORE DI CARICO |
| ESP | PEDIDO | RESORTE DE GAS | KIT DE REPARACION | BRIDA | ADAPTADOR DE CARGA |
| POR | PEDIDO | CILINDRO DE GÁS | KIT DE MANUTENÇÃO | FLANGE | ADAPTADOR DE CARGA |

# FD 5000 V1

*Low Profile*

AZOL GAS

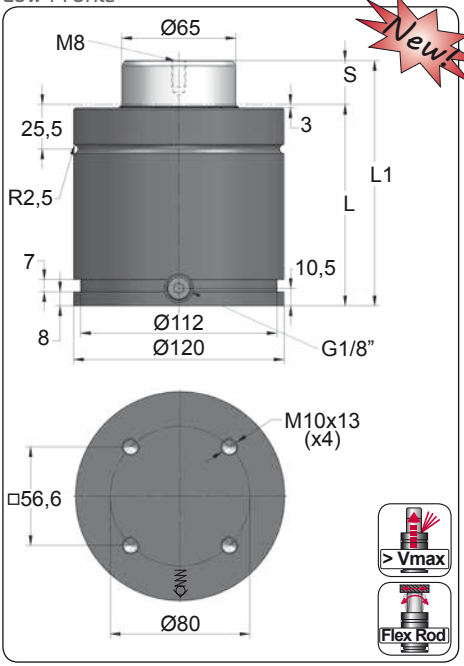


Newt

| ORDER | S (mm) | L1 ±0,25 (mm) | L (mm) | Kg. |
|---|---|---|---|---|
| FD 5000 025 V1 | 25 | 140 | 115 | 8.53 |
| FD 5000 038 V1 | 38 | 166 | 128 | 9.08 |
| FD 5000 050 V1 | 50 | 190 | 140 | 9.59 |
| FD 5000 063 V1 | 63.5 | 217 | 153.5 | 10.17 |
| FD 5000 080 V1 | 80 | 250 | 170 | 10.87 |
| FD 5000 100 V1 | 100 | 290 | 190 | 11.72 |

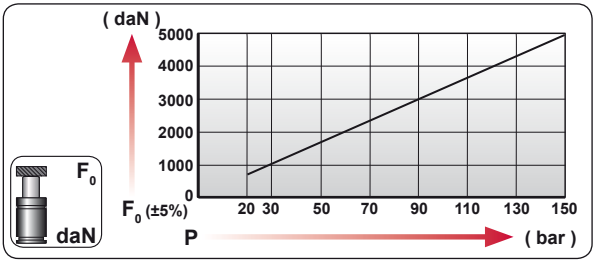


| CODE | bar | psi | F0 daN | F1 daN |
|---|---|---|---|---|
| FD 5000 050 V1 | 150 | 2175 | 4980 | 8365 |
| FD-H 5000 050 V1 | 0 | 0 | --- | --- |

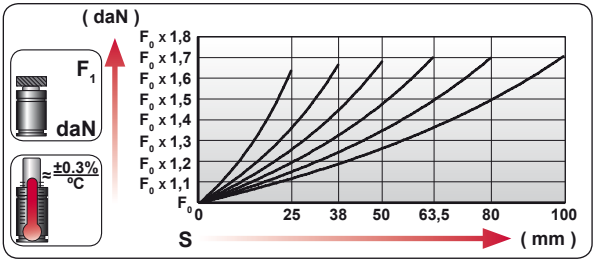


| | |
|---|---|
| ENG | ORDER |
| DEU | BESTELLUNG |
| FRA | COMMANDE |
| ITA | ORDINE |
| ESP | PEDIDO |
| POR | PEDIDO |

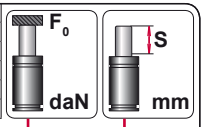


FD 5000 50

FD 5000 050 V1

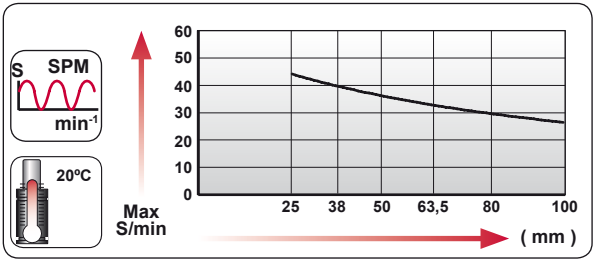


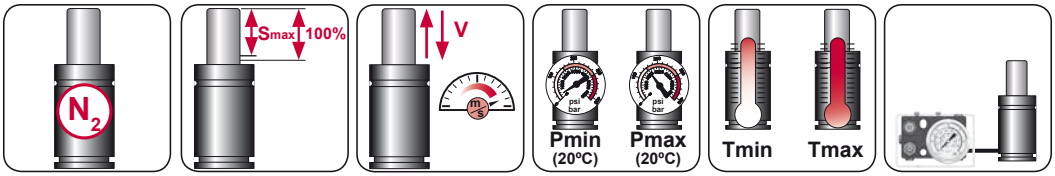


| $N_2$ | Smax < 90% | Vmax 1,6 m/s | bar psi 20 290 | bar psi 150 2175 | °C °F 0 32 | °C °F 80 176 | 600 CP- |
|---|---|---|---|---|---|---|---|

AZOL GAS

# FD 5000 V1 *MOUNTS*

*Low Profile*

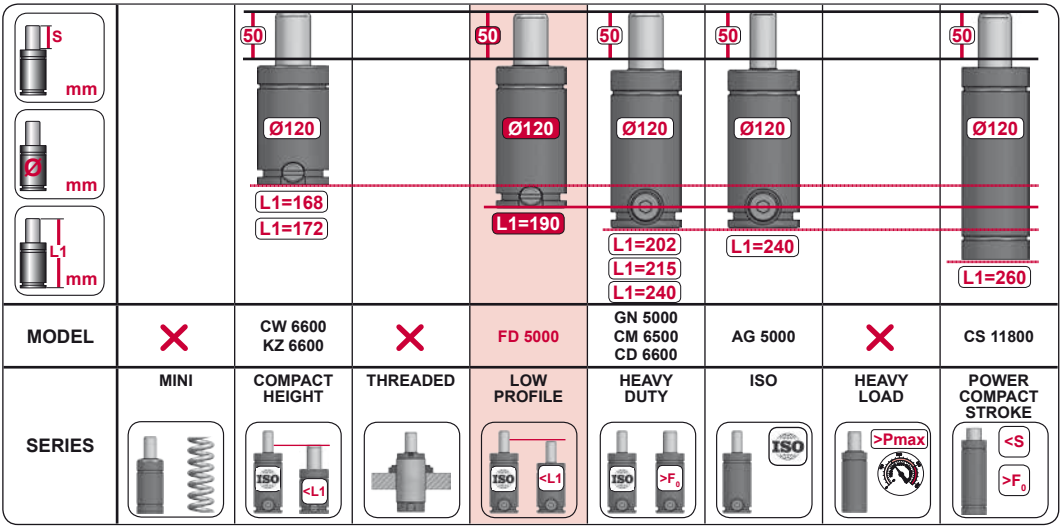


| MODEL | | CW 6600 KZ 6600 | | FD 5000 | GN 5000 CM 6500 CD 6600 | AG 5000 | | CS 11800 |
|---|---|---|---|---|---|---|---|---|
| SERIES | MINI | COMPACT HEIGHT | THREADED | LOW PROFILE | HEAVY DUTY | ISO | HEAVY LOAD | POWER COMPACT STROKE |

## A14-120

E24.54.815.G
EM24.54.700/F

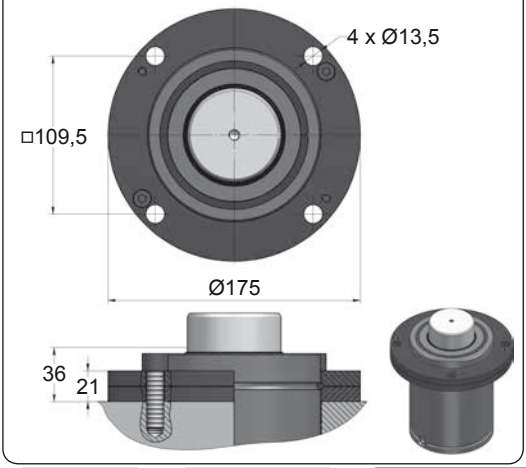


## A34-120

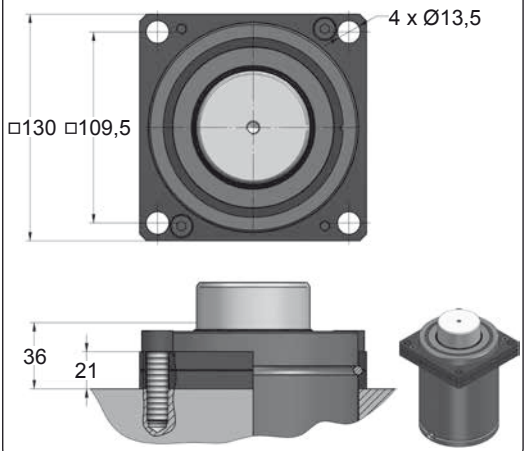





| CODE | | FD 5000 050 V1 | KIT XXXXXXX-S KIT XXXXXXX-C | A14-120 | 18 GA 5 |
|---|---|---|---|---|---|
| ENG | ORDER | GAS SPRING | REPAIR KIT | FLANGE | CHARGING ADAPTER |
| DEU | BESTELLUNG | GASDRUCKFEDER | ERSATZTEILSATZ | FLANSCHE | LADEADAPTER |
| FRA | COMMANDE | RESSORT À GAZ | KIT DE RÉPARATION | BRIDE | RACCORD DE CHARGE |
| ITA | ORDINE | CILINDRO AD AZOTO | KIT DI MANUTENZIONE | FLANGE | ADATTATORE DI CARICO |
| ESP | PEDIDO | RESORTE DE GAS | KIT DE REPARACION | BRIDA | ADAPTADOR DE CARGA |
| POR | PEDIDO | CILINDRO DE GÁS | KIT DE MANUTENÇÃO | FLANGE | ADAPTADOR DE CARGA |

# FD 5000 V1 MOUNTS

*Low Profile*

AZOL GAS

## B21-120

EM24.54.700/F

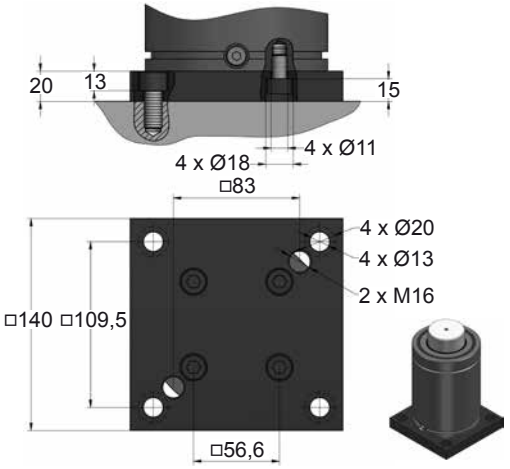


## B76-120

ISO EM24.54.700/F

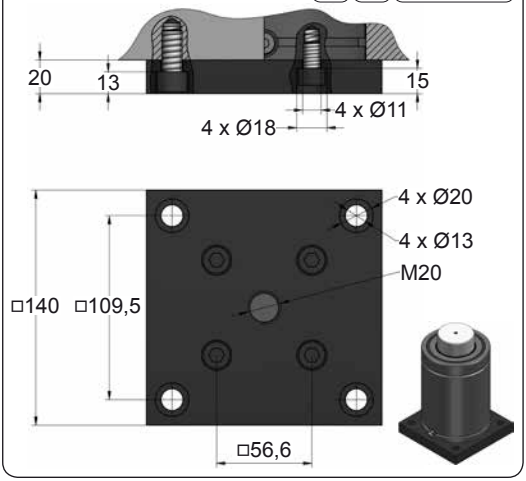


## C05-120

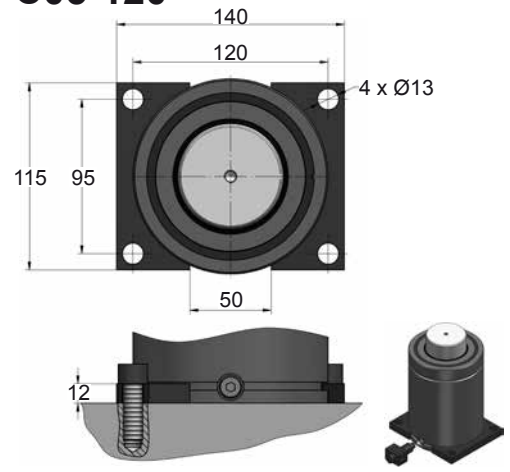


## C20-120

ISO VDI E24.54.815.G EM24.54.700/F

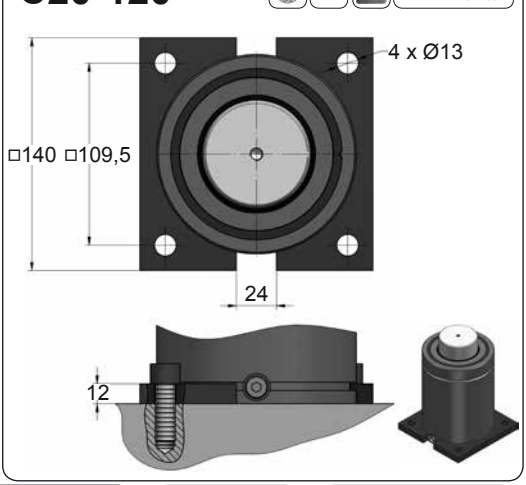









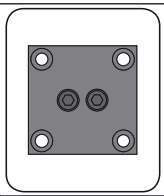

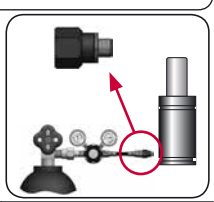

| CODE | | FD 5000 050 V1 | KIT XXXXXXX-S<br>KIT XXXXXXX-C | B21-120 | 18 GA 5 |
|---|---|---|---|---|---|
| ENG | ORDER | GAS SPRING | REPAIR KIT | FLANGE | CHARGING ADAPTER |
| DEU | BESTELLUNG | GASDRUCKFEDER | ERSATZTEILSATZ | FLANSCHE | LADEADAPTER |
| FRA | COMMANDE | RESSORT À GAZ | KIT DE RÉPARATION | BRIDE | RACCORD DE CHARGE |
| ITA | ORDINE | CILINDRO AD AZOTO | KIT DI MANUTENZIONE | FLANGE | ADATTATORE DI CARICO |
| ESP | PEDIDO | RESORTE DE GAS | KIT DE REPARACION | BRIDA | ADAPTADOR DE CARGA |
| POR | PEDIDO | CILINDRO DE GÁS | KIT DE MANUTENÇÃO | FLANGE | ADAPTADOR DE CARGA |

AZOL GAS

# FD 5000 V1 MOUNTS

*Low Profile*

## D02-120

ISO E24.54.815.G EM24.54.700/F

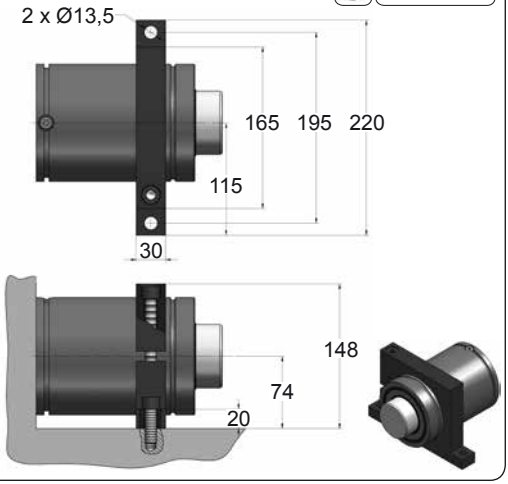


## D67-120

VDI

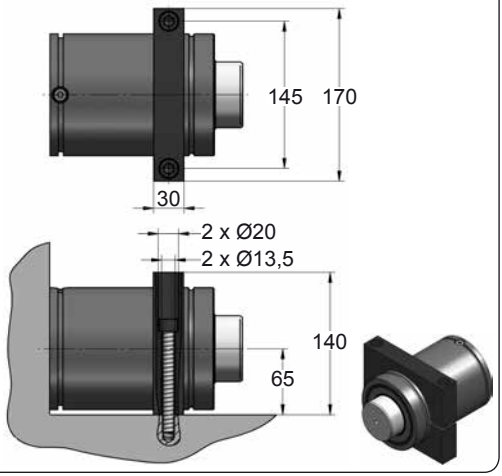









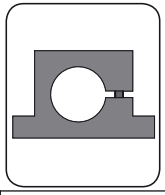

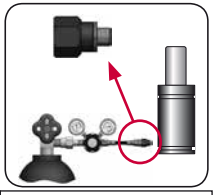

| CODE | | FD 5000 050 V1 | KIT XXXXXXX-S<br>KIT XXXXXXX-C | D02-120 | 18 GA 5 |
|---|---|---|---|---|---|
| ENG | ORDER | GAS SPRING | REPAIR KIT | FLANGE | CHARGING ADAPTER |
| DEU | BESTELLUNG | GASDRUCKFEDER | ERSATZTEILSATZ | FLANSCHE | LADEADAPTER |
| FRA | COMMANDE | RESSORT À GAZ | KIT DE RÉPARATION | BRIDE | RACCORD DE CHARGE |
| ITA | ORDINE | CILINDRO AD AZOTO | KIT DI MANUTENZIONE | FLANGE | ADATTATORE DI CARICO |
| ESP | PEDIDO | RESORTE DE GAS | KIT DE REPARACION | BRIDA | ADAPTADOR DE CARGA |
| POR | PEDIDO | CILINDRO DE GÁS | KIT DE MANUTENÇÃO | FLANGE | ADAPTADOR DE CARGA |

AZOL GAS

# CK LOW PROFILE MEDIUM

| MODEL | $F_0$ | Ø | S | L1 | Pmax | Charge Port | | |
|---|---|---|---|---|---|---|---|---|
| CK 200 V1 | 200 | Ø25 | 5 - 100 | 42 - 232 | 180 | M6 | ✗ | ✗ |
| CK 300 V1 | 300 | Ø32 | 7 - 100 | 53 - 239 | 150 | M6 | ✗ | ✗ |
| CK 570 V1 | 570 | Ø38 | 5 - 125 | 47 - 287 | 150 | M6 | ✗ | ✓ |
| CK 750 V1 | 750 | Ø45 | 12 - 100 | 74 - 250 | 150 | G1/8" | ✓ | ✓ |
| CK 1000 V1 | 1000 | Ø50 | 12 - 100 | 74 - 250 | 160 | G1/8" | ✓ | ✓ |
| CK 1500 V2 | 1500 | Ø63 | 12 - 100 | 84 - 260 | 150 | G1/8" | ✓ | ✓ |
| CK 2500 V1 | 2500 | Ø75 | 12 - 100 | 84 - 260 | 160 | G1/8" | ✓ | ✓ |
| CK 4000 V1 | 4000 | Ø95 | 25 - 100 | 120 - 270 | 150 | G1/8" | ✓ | ✓ |

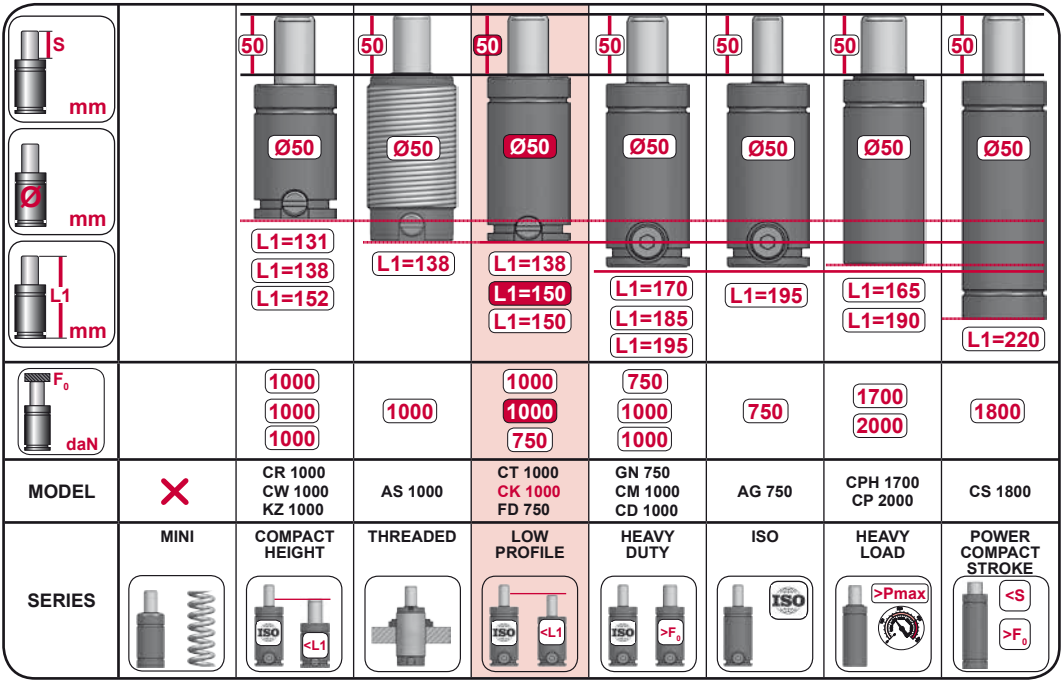

# CK 200 V1

*Low Profile*

AZOL GAS

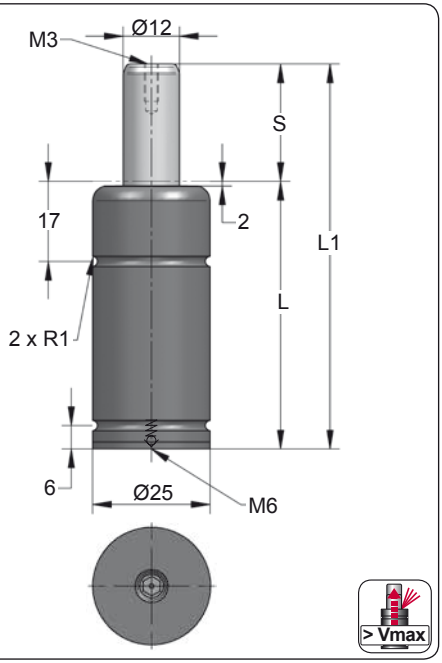


| ORDER | S (mm) | L1 ±0,25 (mm) | L (mm) | Kg. |
|---|---|---|---|---|
| CK 200 005 V1 | 5 | 42 | 37 | 0.10 |
| CK 200 007 V1 | 7 | 46 | 39 | 0.12 |
| CK 200 010 V1 | 10 | 52 | 42 | 0.12 |
| CK 200 012 V1 | 12 | 56 | 44 | 0.13 |
| CK 200 016 V1 | 16 | 64 | 48 | 0.14 |
| CK 200 019 V1 | 19 | 70 | 51 | 0.14 |
| CK 200 025 V1 | 25 | 82 | 57 | 0.16 |
| CK 200 032 V1 | 32 | 96 | 64 | 0.17 |
| CK 200 038 V1 | 38 | 108 | 70 | 0.19 |
| CK 200 050 V1 | 50 | 132 | 82 | 0.21 |
| CK 200 063 V1 | 63 | 158 | 95 | 0.24 |
| CK 200 080 V1 | 80 | 192 | 112 | 0.28 |
| CK 200 100 V1 | 100 | 232 | 132 | 0.32 |

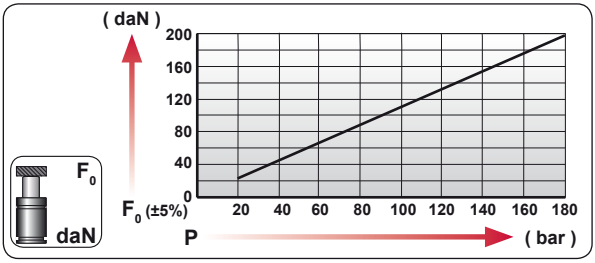


| CODE | bar | psi | $F_0$ daN | $F_1$ daN |
|---|---|---|---|---|
| CK 200 050 V1 | 170 | 2465 | 190 | 280 |
| --------- | --- | --- | --- | --- |

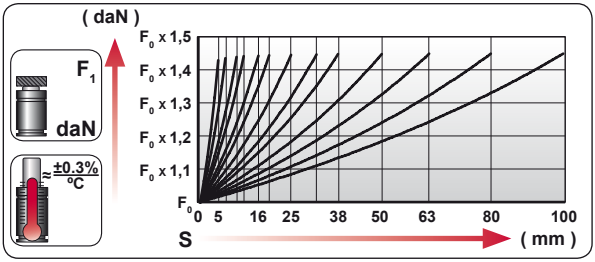


| | |
|---|---|
| ENG | ORDER |
| DEU | BESTELLUNG |
| FRA | COMMANDE |
| ITA | ORDINE |
| ESP | PEDIDO |
| POR | PEDIDO |




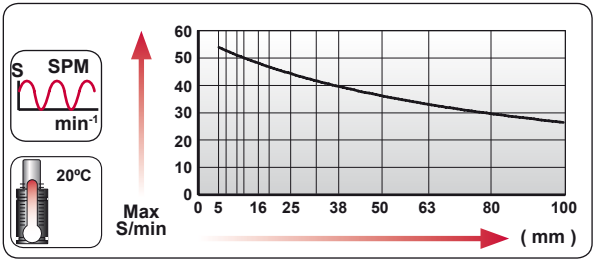


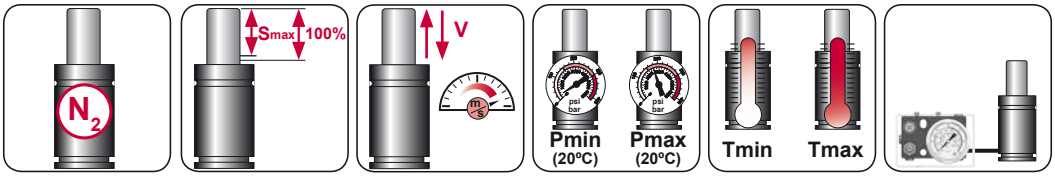


| $N_2$ | Smax < 90% | Vmax 1,6 m/s | bar psi 20 290 | bar psi 180 2610 | °C °F 0 32 | °C °F 80 176 | |
|---|---|---|---|---|---|---|---|

AZOL GAS

# CK 200 V1 MOUNTS

*Low Profile*

## A14-025

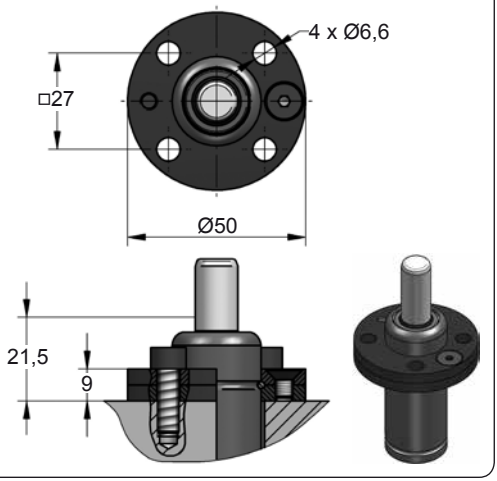


## A44-025

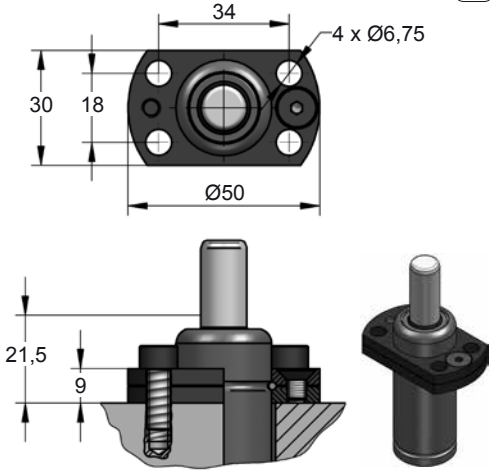


## A49-025

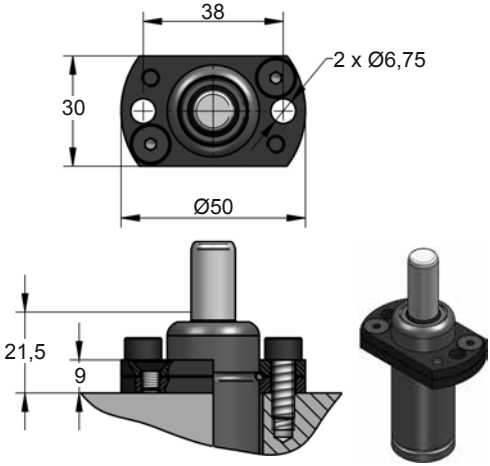


## D02-025

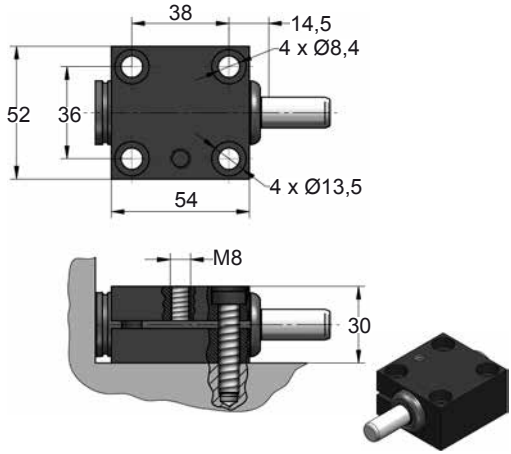









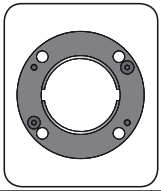

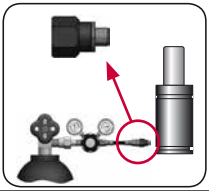

| CODE | | CK 200 050 V1 | | A14-025 | 06 GA 11 |
|---|---|---|---|---|---|
| ENG | ORDER | GAS SPRING | REPAIR KIT | FLANGE | CHARGING ADAPTER |
| DEU | BESTELLUNG | GASDRUCKFEDER | ERSATZTEILSATZ | FLANSCHE | LADEADAPTER |
| FRA | COMMANDE | RESSORT À GAZ | KIT DE RÉPARATION | BRIDE | RACCORD DE CHARGE |
| ITA | ORDINE | CILINDRO AD AZOTO | KIT DI MANUTENZIONE | FLANGE | ADATTATORE DI CARICO |
| ESP | PEDIDO | RESORTE DE GAS | KIT DE REPARACION | BRIDA | ADAPTADOR DE CARGA |
| POR | PEDIDO | CILINDRO DE GÁS | KIT DE MANUTENÇÃO | FLANGE | ADAPTADOR DE CARGA |

# CK 300 V1

*Low Profile*

AZOL GAS

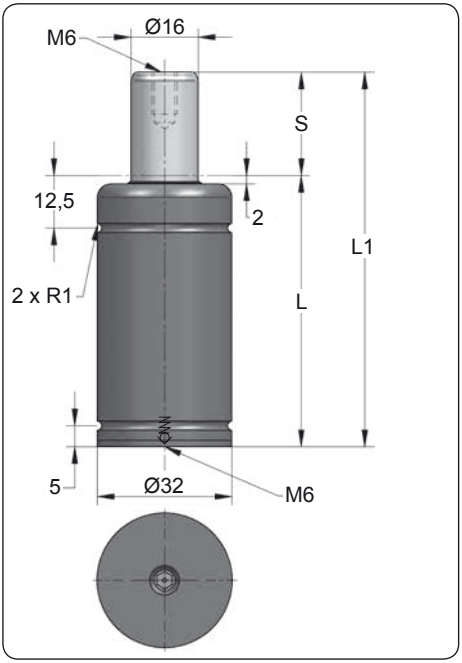


| ORDER | S (mm) | L1 ±0,25 (mm) | L (mm) | Kg. |
|---|---|---|---|---|
| CK 300 007 V1 | 7 | 53 | 46 | 0.21 |
| CK 300 012 V1 | 12 | 63 | 51 | 0.23 |
| CK 300 016 V1 | 16 | 71 | 55 | 0.25 |
| CK 300 025 V1 | 25 | 89 | 64 | 0.28 |
| CK 300 038 V1 | 38 | 115 | 77 | 0.33 |
| CK 300 050 V1 | 50 | 139 | 89 | 0.38 |
| CK 300 063 V1 | 63 | 165 | 102 | 0.43 |
| CK 300 080 V1 | 80 | 199 | 119 | 0.50 |
| CK 300 100 V1 | 100 | 239 | 139 | 0.57 |

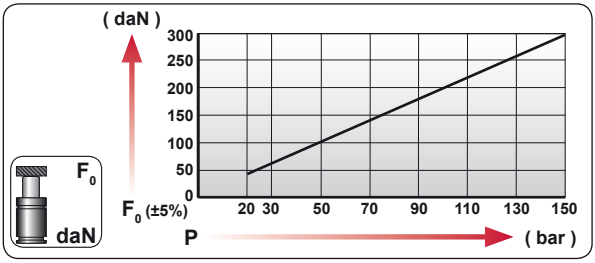


| CODE | bar | psi | $F_0$ daN | $F_1$ daN |
|---|---|---|---|---|
| CK 300 050 V1 | 150 | 2175 | 300 | 460 |
| --------- | --- | --- | --- | --- |

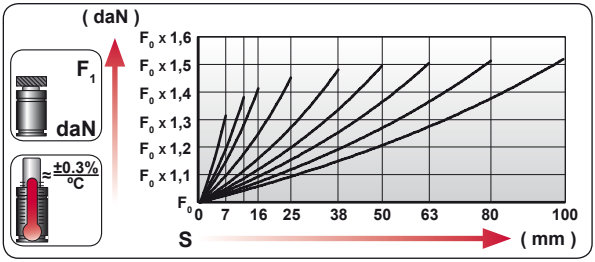


| | |
|---|---|
| ENG | ORDER |
| DEU | BESTELLUNG |
| FRA | COMMANDE |
| ITA | ORDINE |
| ESP | PEDIDO |
| POR | PEDIDO |




CK 300 50

CK 300 050 V1

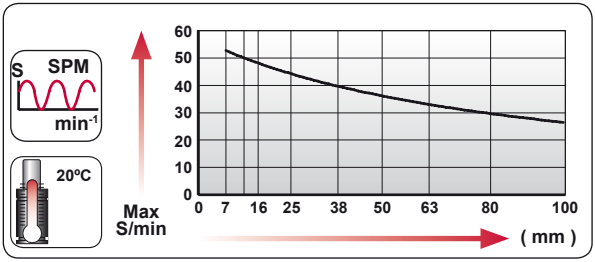


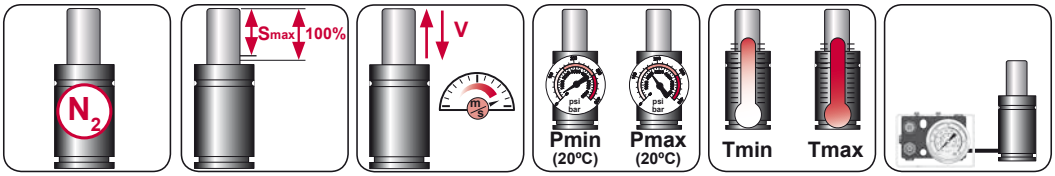


| $N_2$ | Smax < 90% | Vmax 1,6 m/s | bar psi 20 290 | bar psi 150 2175 | ºC ºF 0 32 | ºC ºF 80 176 | |
|---|---|---|---|---|---|---|---|

AZOL GAS

# CK 300 V1 MOUNTS

*Low Profile*

## A14-032

ISO E24.54.815.G EM24.54.700/F

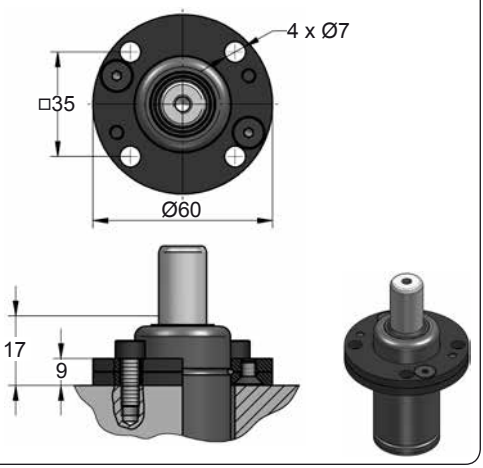


## A34-032

VDI

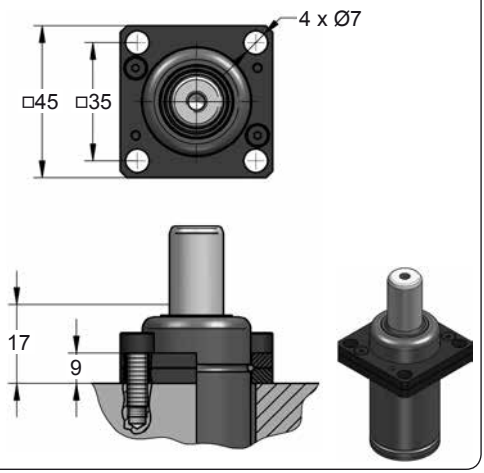


## A44-032

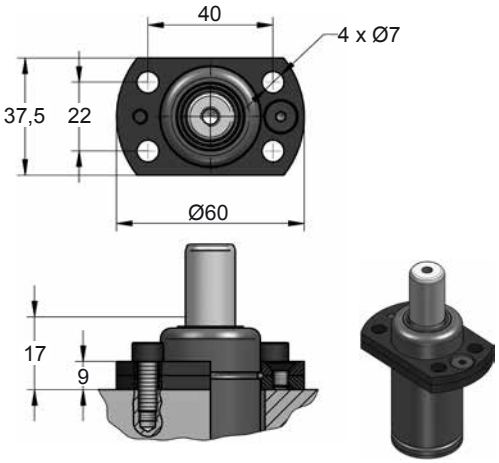


## D02-032

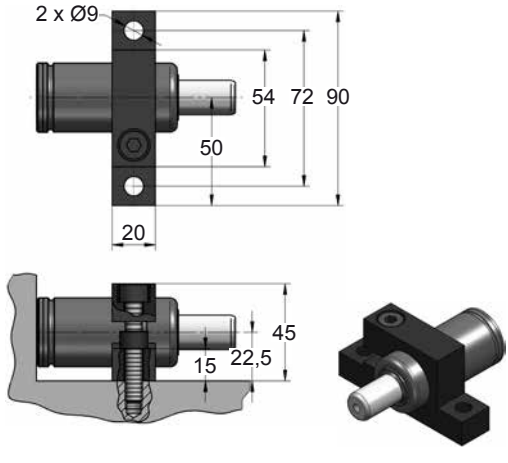




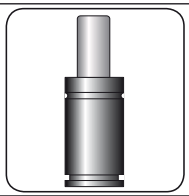




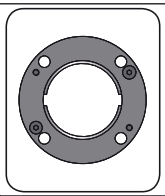

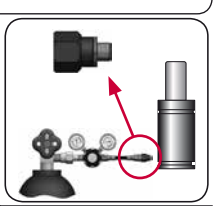

| CODE | | CK 300 050 V1 | | A14-032 | 06 GA 11 |
|---|---|---|---|---|---|
| ENG | ORDER | GAS SPRING | REPAIR KIT | FLANGE | CHARGING ADAPTER |
| DEU | BESTELLUNG | GASDRUCKFEDER | ERSATZTEILSATZ | FLANSCHE | LADEADAPTER |
| FRA | COMMANDE | RESSORT À GAZ | KIT DE RÉPARATION | BRIDE | RACCORD DE CHARGE |
| ITA | ORDINE | CILINDRO AD AZOTO | KIT DI MANUTENZIONE | FLANGE | ADATTATORE DI CARICO |
| ESP | PEDIDO | RESORTE DE GAS | KIT DE REPARACION | BRIDA | ADAPTADOR DE CARGA |
| POR | PEDIDO | CILINDRO DE GÁS | KIT DE MANUTENÇÃO | FLANGE | ADAPTADOR DE CARGA |

# CK 570

*Low Profile*

AZOL GAS

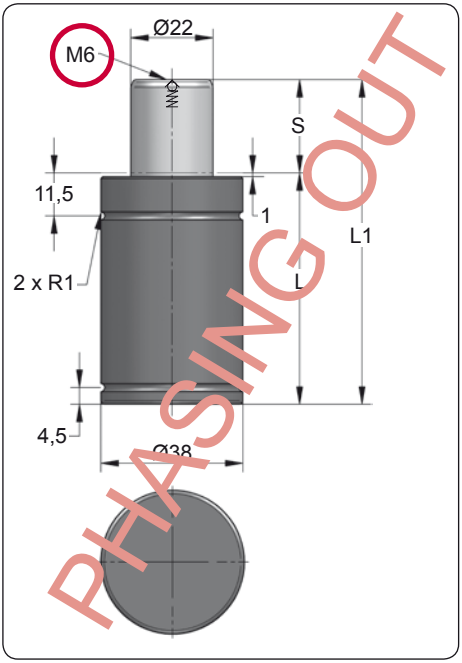


| ORDER | S (mm) | L1 ±0,25 (mm) | L (mm) | Kg. |
|---|---|---|---|---|
| CK 570 005 | 5 | 47 | 42 | 0.26 |
| CK 570 007 | 7 | 51 | 44 | 0.28 |
| CK 570 010 | 10 | 57 | 47 | 0.29 |
| CK 570 012 | 12 | 61 | 49 | 0.30 |
| CK 570 016 | 16 | 69 | 53 | 0.32 |
| CK 570 025 | 25 | 87 | 62 | 0.36 |
| CK 570 038 | 38 | 113 | 75 | 0.42 |
| CK 570 050 | 50 | 137 | 87 | 0.48 |
| CK 570 063 | 63 | 163 | 100 | 0.54 |
| CK 570 080 | 80 | 197 | 117 | 0.62 |
| CK 570 100 | 100 | 237 | 137 | 0.71 |
| CK 570 125 | 125 | 287 | 162 | 0.83 |

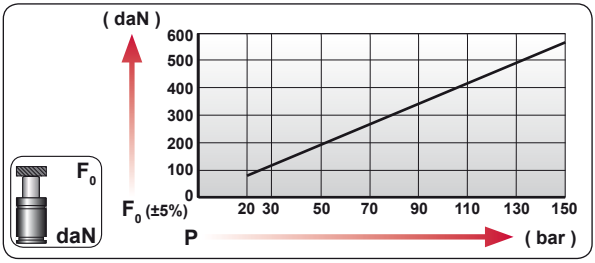


| CODE | | bar | psi | $F_0$ daN | $F_1$ daN |
|---|---|---|---|---|---|
| CK 570 050 | | 150 | 2175 | 570 | 915 |
| --------- | | --- | --- | --- | --- |

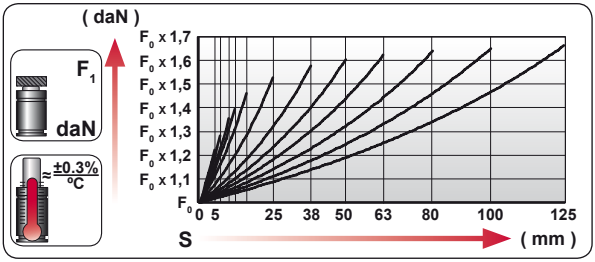


| | |
|---|---|
| ENG | ORDER |
| DEU | BESTELLUNG |
| FRA | COMMANDE |
| ITA | ORDINE |
| ESP | PEDIDO |
| POR | PEDIDO |




CK 570 50

CK 570 050

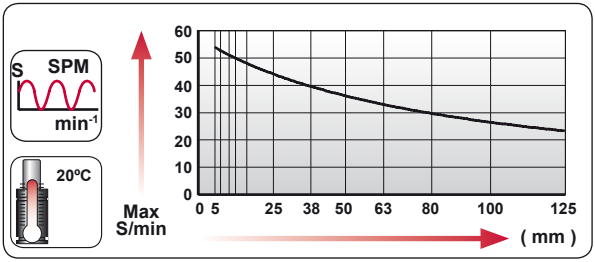


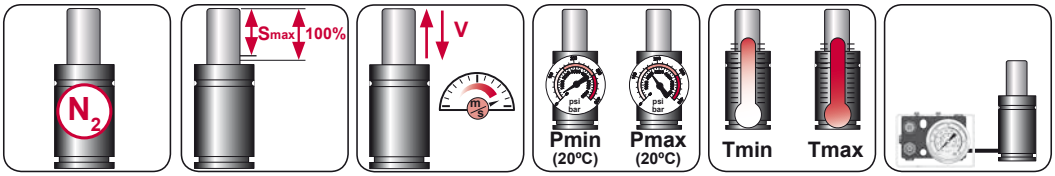


| $N_2$ | Smax < 90% | Vmax 1,6 m/s | bar psi 20 290 | bar psi 150 2175 | °C °F 0 32 | °C °F 80 176 |
|---|---|---|---|---|---|---|

AZOL GAS

# CK 570 MOUNTS

*Low Profile*

## A14-038

E24.54.815.G
EM24.54.700/F

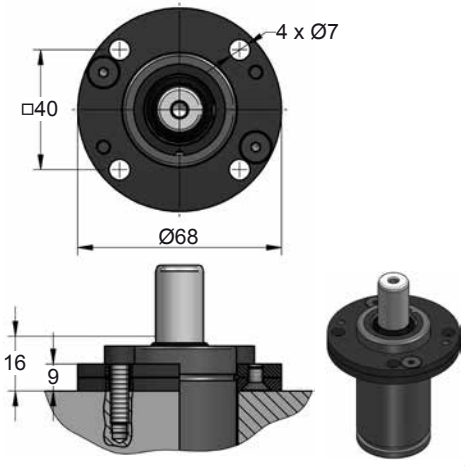


## A34-038

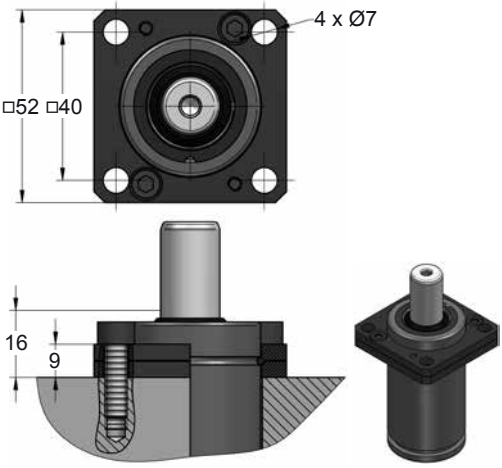


## D02-038

E24.54.815.G

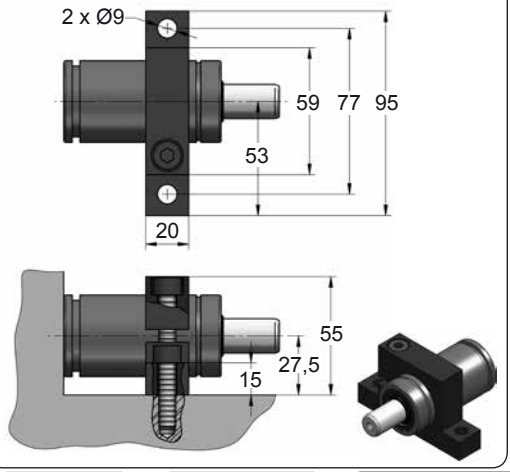


## D67-038

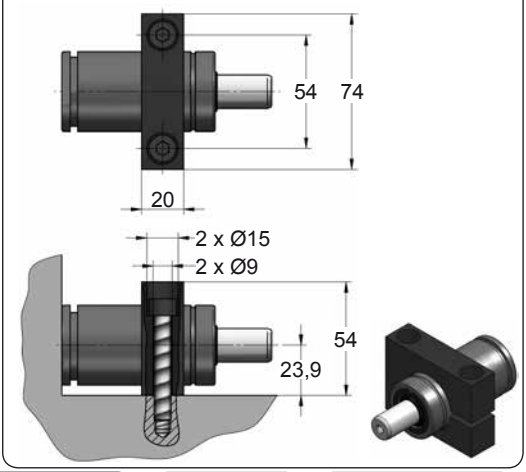




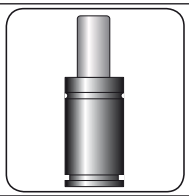




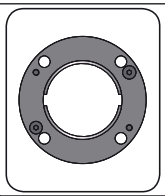

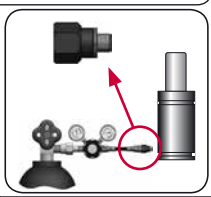

| CODE | | CK 570 050 | KIT XXXXXXX-S<br>KIT XXXXXXX-C | A14-038 | 06 GA 10 |
|---|---|---|---|---|---|
| ENG | ORDER | GAS SPRING | REPAIR KIT | FLANGE | CHARGING ADAPTER |
| DEU | BESTELLUNG | GASDRUCKFEDER | ERSATZTEILSATZ | FLANSCHE | LADEADAPTER |
| FRA | COMMANDE | RESSORT À GAZ | KIT DE RÉPARATION | BRIDE | RACCORD DE CHARGE |
| ITA | ORDINE | CILINDRO AD AZOTO | KIT DI MANUTENZIONE | FLANGE | ADATTATORE DI CARICO |
| ESP | PEDIDO | RESORTE DE GAS | KIT DE REPARACION | BRIDA | ADAPTADOR DE CARGA |
| POR | PEDIDO | CILINDRO DE GÁS | KIT DE MANUTENÇÃO | FLANGE | ADAPTADOR DE CARGA |

# CK 570 V1

*Low Profile*

AZOL GAS

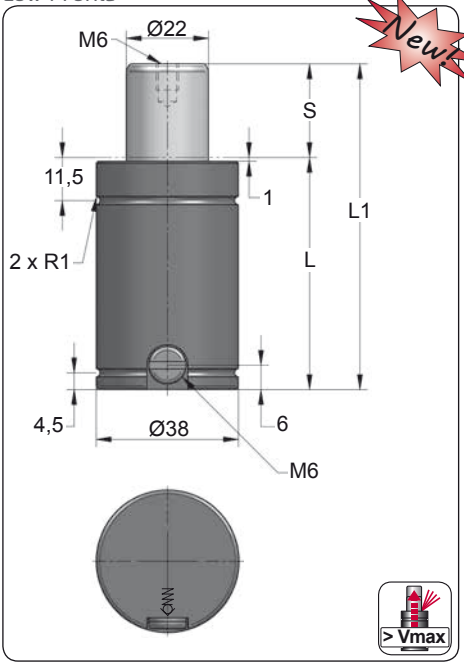


Newt

| ORDER | S (mm) | L1 ±0,25 (mm) | L (mm) | Kg. |
|---|---|---|---|---|
| CK 570 005 V1 | 5 | 47 | 42 | 0.30 |
| CK 570 007 V1 | 7 | 51 | 44 | 0.31 |
| CK 570 010 V1 | 10 | 57 | 47 | 0.32 |
| CK 570 012 V1 | 12 | 61 | 49 | 0.33 |
| CK 570 016 V1 | 16 | 69 | 53 | 0.35 |
| CK 570 025 V1 | 25 | 87 | 62 | 0.39 |
| CK 570 038 V1 | 38 | 113 | 75 | 0.45 |
| CK 570 050 V1 | 50 | 137 | 87 | 0.51 |
| CK 570 063 V1 | 63 | 163 | 100 | 0.57 |
| CK 570 080 V1 | 80 | 197 | 117 | 0.64 |
| CK 570 100 V1 | 100 | 237 | 137 | 0.73 |
| CK 570 125 V1 | 125 | 287 | 162 | 0.85 |

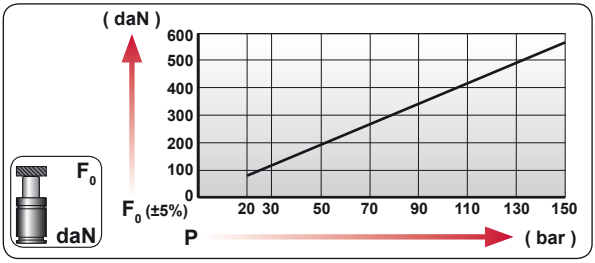


| CODE | bar | psi | $F_0$ daN | $F_1$ daN |
|---|---|---|---|---|
| CK 570 050 V1 | 150 | 2175 | 570 | 915 |
| CK-H 570 050 V1 | 0 | 0 | --- | --- |

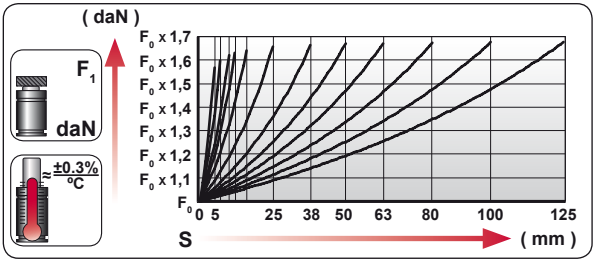


| | |
|---|---|
| ENG | ORDER |
| DEU | BESTELLUNG |
| FRA | COMMANDE |
| ITA | ORDINE |
| ESP | PEDIDO |
| POR | PEDIDO |

$F_0$ daN — S mm

CK 570 50

CK 570 050 V1

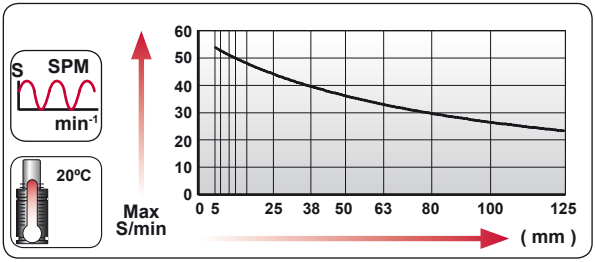


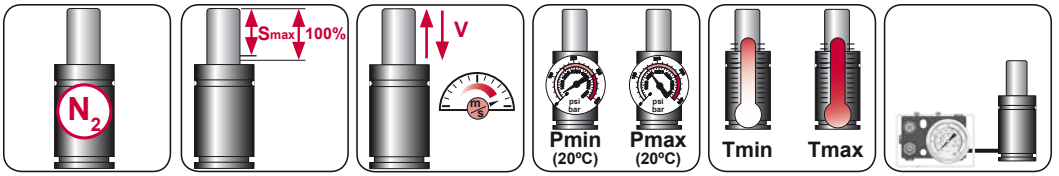


| $N_2$ | Smax < 90% | Vmax 1,6 m/s | bar psi 20 290 | bar psi 150 2175 | °C °F 0 32 | °C °F 80 176 | 600 CP- |
|---|---|---|---|---|---|---|---|

AZOL GAS

# CK 570 V1 MOUNTS

*Low Profile*

## A14-038

ISO E24.54.815.G EM24.54.700/F

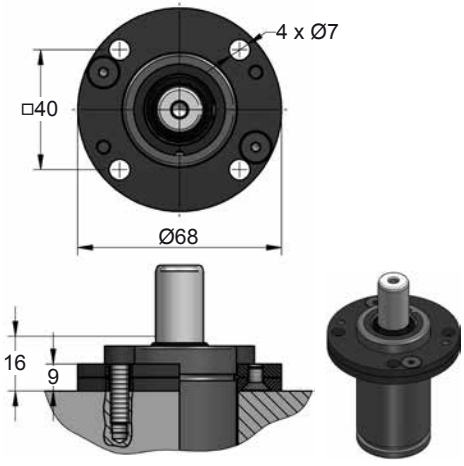


## A34-038

ISO VDI

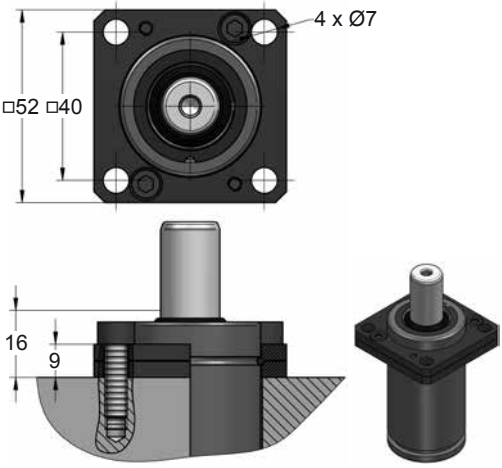


## D02-038

E24.54.815.G

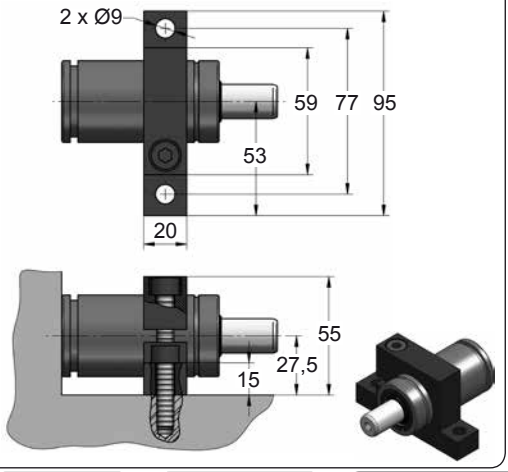


## D67-038

VDI

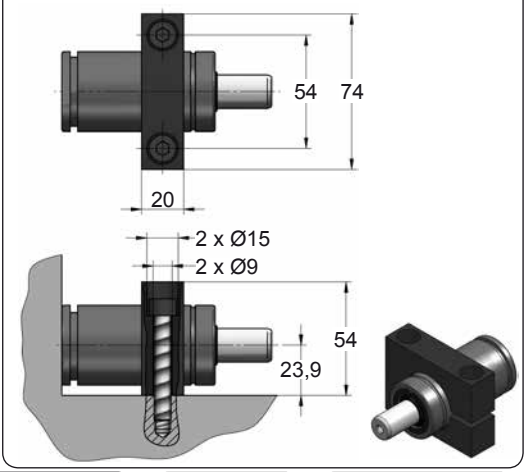




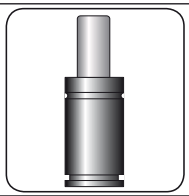




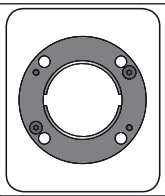

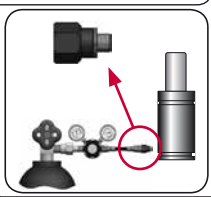

| CODE | | CK 570 050 V1 | KIT XXXXXXX-S<br>KIT XXXXXXX-C | A14-038 | 06 GA 11 |
|---|---|---|---|---|---|
| ENG | ORDER | GAS SPRING | REPAIR KIT | FLANGE | CHARGING ADAPTER |
| DEU | BESTELLUNG | GASDRUCKFEDER | ERSATZTEILSATZ | FLANSCHE | LADEADAPTER |
| FRA | COMMANDE | RESSORT À GAZ | KIT DE RÉPARATION | BRIDE | RACCORD DE CHARGE |
| ITA | ORDINE | CILINDRO AD AZOTO | KIT DI MANUTENZIONE | FLANGE | ADATTATORE DI CARICO |
| ESP | PEDIDO | RESORTE DE GAS | KIT DE REPARACION | BRIDA | ADAPTADOR DE CARGA |
| POR | PEDIDO | CILINDRO DE GÁS | KIT DE MANUTENÇÃO | FLANGE | ADAPTADOR DE CARGA |

# CK 750

*Low Profile*

AZOL GAS

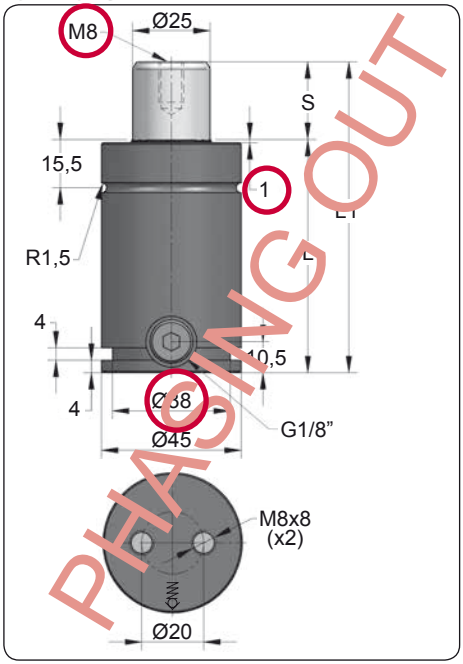


| ORDER | S (mm) | L1 ±0,25 (mm) | L (mm) | Kg. |
|---|---|---|---|---|
| CK 750 012 | 12 | 74 | 62 | 0.58 |
| CK 750 019 | 19 | 88 | 69 | 0.62 |
| CK 750 025 | 25 | 100 | 75 | 0.68 |
| CK 750 038 | 38 | 126 | 88 | 0.77 |
| CK 750 050 | 50 | 150 | 100 | 0.80 |
| CK 750 063 | 63 | 176 | 113 | 0.92 |
| CK 750 080 | 80 | 210 | 130 | 1.17 |
| CK 750 100 | 100 | 250 | 150 | 1.30 |

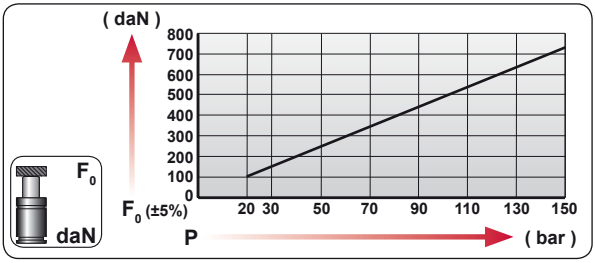


| CODE | bar | psi | F0 daN | F1 daN |
|---|---|---|---|---|
| CK 750 050 | 150 | 2175 | 740 | 1180 |
| CK-H 750 050 | 0 | 0 | --- | --- |

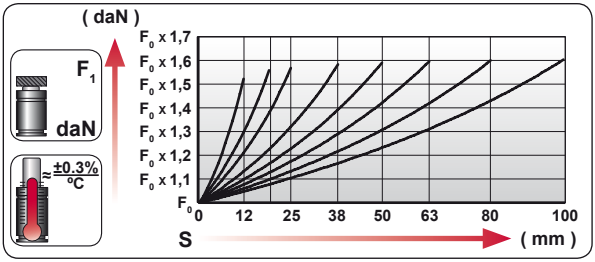


| ENG | ORDER |
|---|---|
| DEU | BESTELLUNG |
| FRA | COMMANDE |
| ITA | ORDINE |
| ESP | PEDIDO |
| POR | PEDIDO |




CK 750 ??

CK 750 050

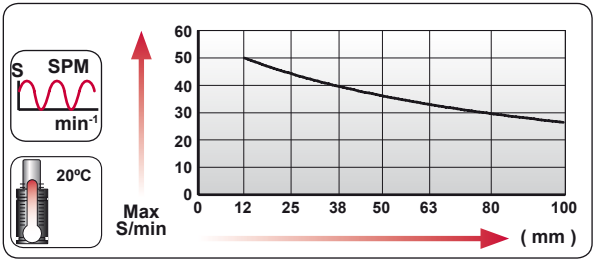


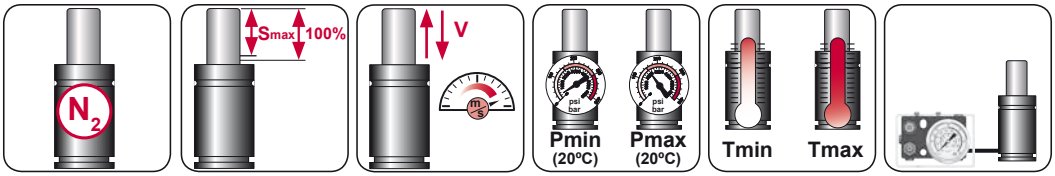


| $N_2$ | Smax < 90% | Vmax 1,6 m/s | bar psi 20 290 | bar psi 150 2175 | °C °F 0 32 | °C °F 80 176 | 600 CP- |
|---|---|---|---|---|---|---|---|

AZOL GAS

# CK 750 MOUNTS

*Low Profile*

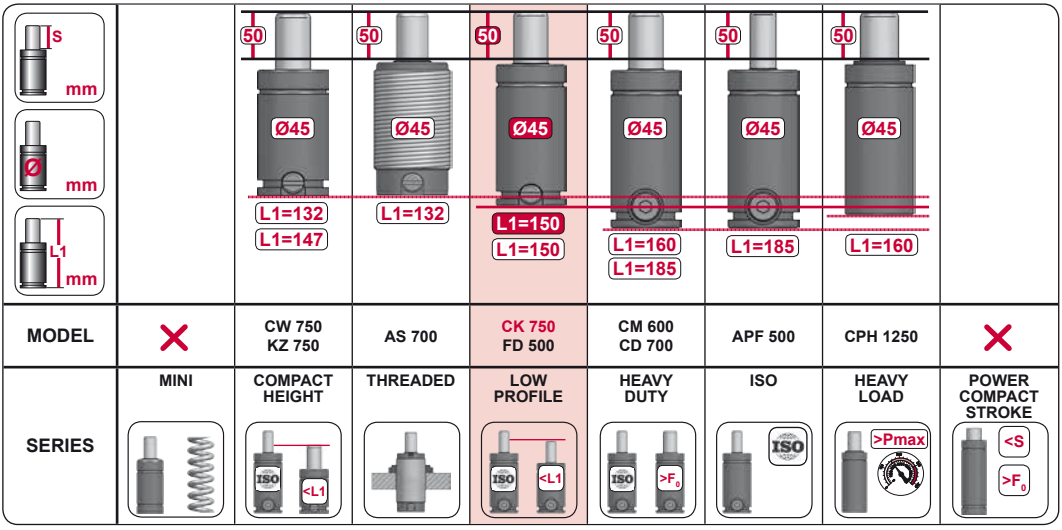


| MODEL | | CW 750 KZ 750 | AS 700 | CK 750 FD 500 | CM 600 CD 700 | APF 500 | CPH 1250 | |
|---|---|---|---|---|---|---|---|---|
| SERIES | MINI | COMPACT HEIGHT | THREADED | LOW PROFILE | HEAVY DUTY | ISO | HEAVY LOAD | POWER COMPACT STROKE |




| CODE | | CK 750 050 | KIT XXXXXXX-S KIT XXXXXXX-C | A69-045 | 18 GA 5 |
|---|---|---|---|---|---|
| ENG | ORDER | GAS SPRING | REPAIR KIT | FLANGE | CHARGING ADAPTER |
| DEU | BESTELLUNG | GASDRUCKFEDER | ERSATZTEILSATZ | FLANSCHE | LADEADAPTER |
| FRA | COMMANDE | RESSORT À GAZ | KIT DE RÉPARATION | BRIDE | RACCORD DE CHARGE |
| ITA | ORDINE | CILINDRO AD AZOTO | KIT DI MANUTENZIONE | FLANGE | ADATTATORE DI CARICO |
| ESP | PEDIDO | RESORTE DE GAS | KIT DE REPARACION | BRIDA | ADAPTADOR DE CARGA |
| POR | PEDIDO | CILINDRO DE GÁS | KIT DE MANUTENÇÃO | FLANGE | ADAPTADOR DE CARGA |

# CK 750 V1

*Low Profile*

AZOL GAS

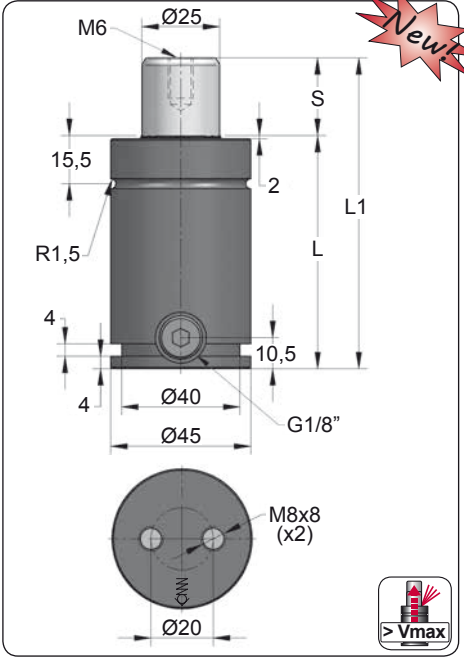


Newt

| ORDER | S (mm) | L1 ±0,25 (mm) | L (mm) | Kg. |
|---|---|---|---|---|
| CK 750 012 V1 | 12 | 74 | 62 | 0.58 |
| CK 750 019 V1 | 19 | 88 | 69 | 0.62 |
| CK 750 025 V1 | 25 | 100 | 75 | 0.68 |
| CK 750 038 V1 | 38 | 126 | 88 | 0.77 |
| CK 750 050 V1 | 50 | 150 | 100 | 0.80 |
| CK 750 063 V1 | 63 | 176 | 113 | 0.92 |
| CK 750 080 V1 | 80 | 210 | 130 | 1.17 |
| CK 750 100 V1 | 100 | 250 | 150 | 1.30 |

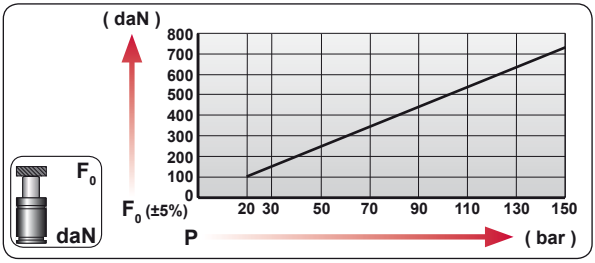


| CODE | bar | psi | $F_0$ daN | $F_1$ daN |
|---|---|---|---|---|
| CK 750 050 V1 | 150 | 2175 | 740 | 1180 |
| CK-H 750 050 V1 | 0 | 0 | --- | --- |

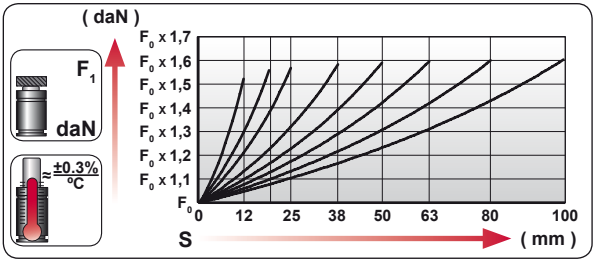


| | |
|---|---|
| ENG | ORDER |
| DEU | BESTELLUNG |
| FRA | COMMANDE |
| ITA | ORDINE |
| ESP | PEDIDO |
| POR | PEDIDO |




CK 750 50

CK 750 050 V1

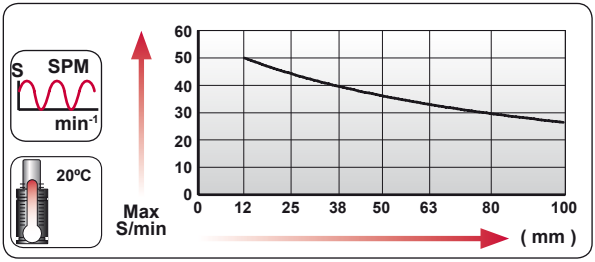


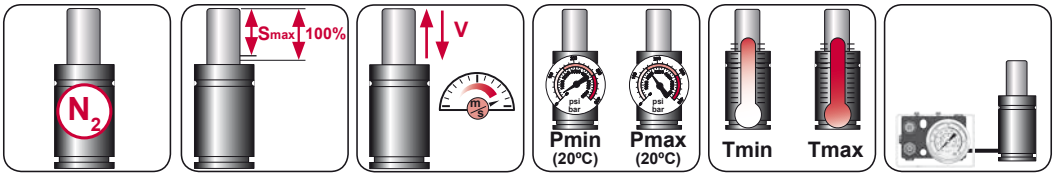


| $N_2$ | Smax < 90% | Vmax 1,6 m/s | bar psi 20 290 | bar psi 150 2175 | °C °F 0 32 | °C °F 80 176 | 600 CP- |
|---|---|---|---|---|---|---|---|

AZOL GAS

# CK 750 V1 MOUNTS

*Low Profile*

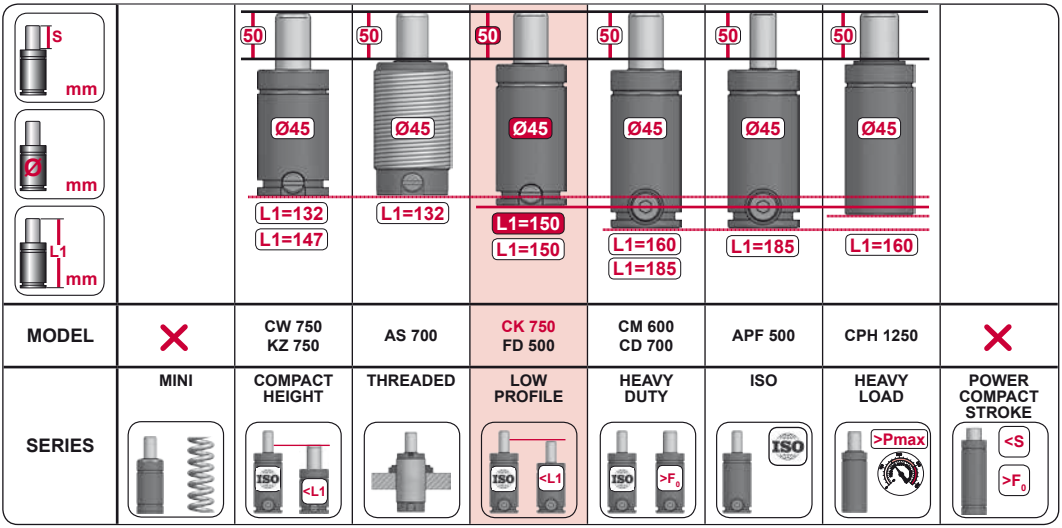


| MODEL | | CW 750 KZ 750 | AS 700 | CK 750 FD 500 | CM 600 CD 700 | APF 500 | CPH 1250 | |
|---|---|---|---|---|---|---|---|---|
| SERIES | MINI | COMPACT HEIGHT | THREADED | LOW PROFILE | HEAVY DUTY | ISO | HEAVY LOAD | POWER COMPACT STROKE |

## A69-045

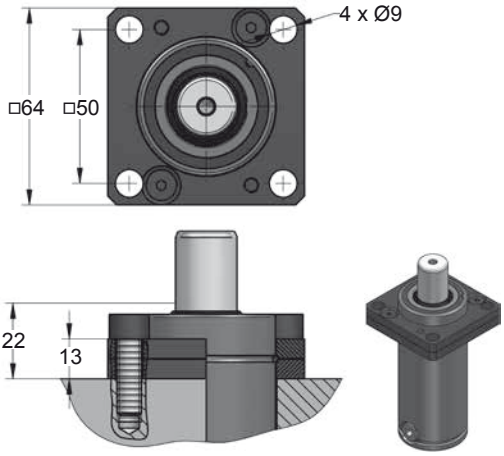


## A74-045

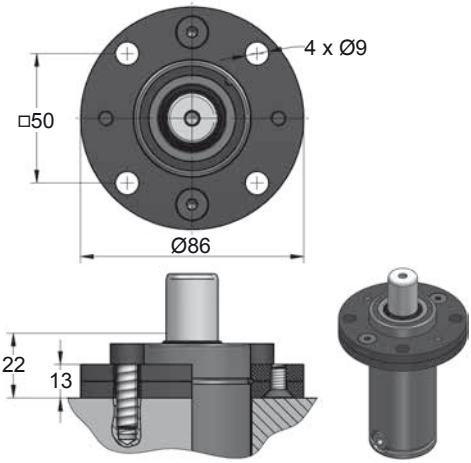





| CODE | | CK 750 050 V1 | KIT XXXXXXX-S KIT XXXXXXX-C | A69-045 | 18 GA 5 |
|---|---|---|---|---|---|
| ENG | ORDER | GAS SPRING | REPAIR KIT | FLANGE | CHARGING ADAPTER |
| DEU | BESTELLUNG | GASDRUCKFEDER | ERSATZTEILSATZ | FLANSCHE | LADEADAPTER |
| FRA | COMMANDE | RESSORT À GAZ | KIT DE RÉPARATION | BRIDE | RACCORD DE CHARGE |
| ITA | ORDINE | CILINDRO AD AZOTO | KIT DI MANUTENZIONE | FLANGE | ADATTATORE DI CARICO |
| ESP | PEDIDO | RESORTE DE GAS | KIT DE REPARACION | BRIDA | ADAPTADOR DE CARGA |
| POR | PEDIDO | CILINDRO DE GÁS | KIT DE MANUTENÇÃO | FLANGE | ADAPTADOR DE CARGA |

# CK 750 V1 *MOUNTS*

*Low Profile*

AZOL GAS

## B21-045

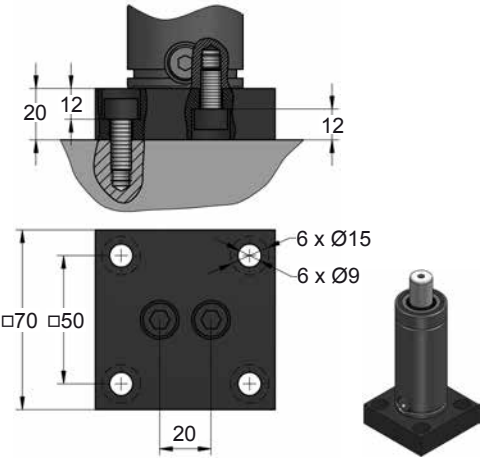


## B76-045

ISO E24.54.815.G

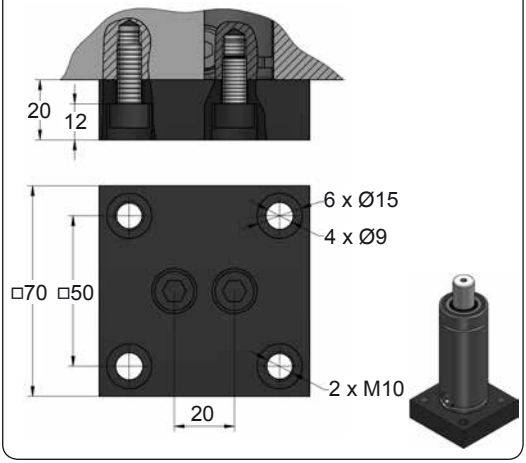


## C05-045

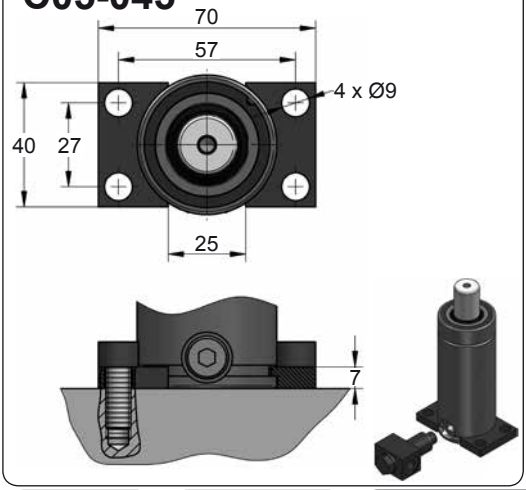


## C20-045

ISO VDI E24.54.815.G EM24.54.700/F

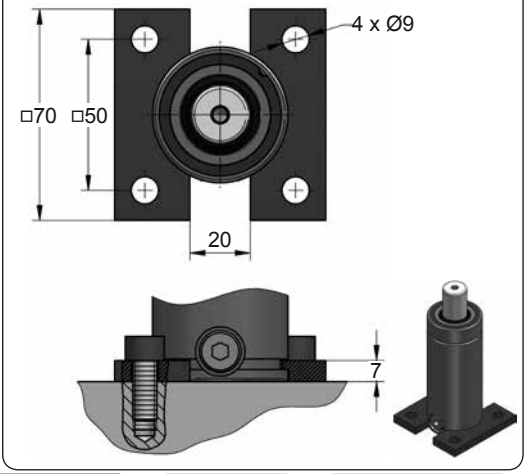









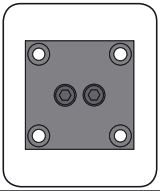

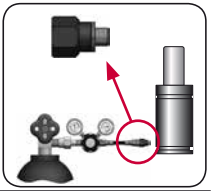

| CODE | | CK 750 050 V1 | KIT XXXXXXX-S<br>KIT XXXXXXX-C | B21-045 | 18 GA 5 |
|---|---|---|---|---|---|
| ENG | ORDER | GAS SPRING | REPAIR KIT | FLANGE | CHARGING ADAPTER |
| DEU | BESTELLUNG | GASDRUCKFEDER | ERSATZTEILSATZ | FLANSCHE | LADEADAPTER |
| FRA | COMMANDE | RESSORT À GAZ | KIT DE RÉPARATION | BRIDE | RACCORD DE CHARGE |
| ITA | ORDINE | CILINDRO AD AZOTO | KIT DI MANUTENZIONE | FLANGE | ADATTATORE DI CARICO |
| ESP | PEDIDO | RESORTE DE GAS | KIT DE REPARACION | BRIDA | ADAPTADOR DE CARGA |
| POR | PEDIDO | CILINDRO DE GÁS | KIT DE MANUTENÇÃO | FLANGE | ADAPTADOR DE CARGA |

AZOL GAS

# CK 750 V1 MOUNTS

*Low Profile*

## D02-045

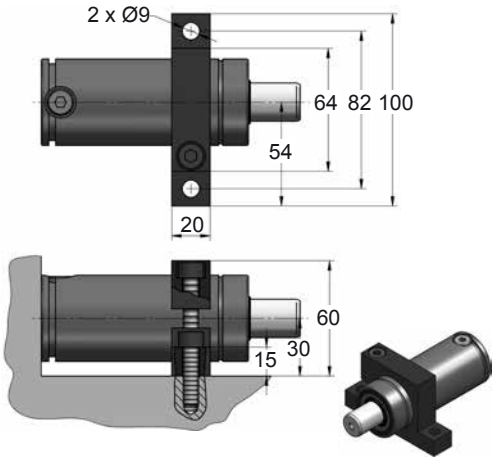


## D67-045

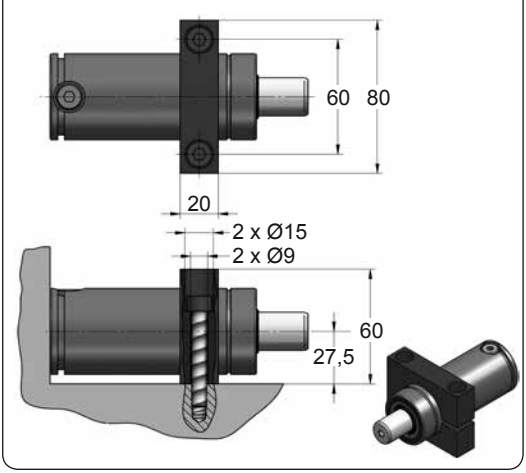









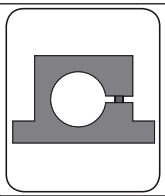

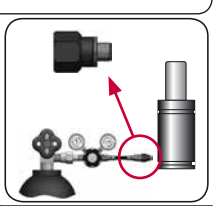

| CODE | | CK 750 050 V1 | KIT XXXXXXX-S<br>KIT XXXXXXX-C | D02-045 | 18 GA 5 |
|---|---|---|---|---|---|
| ENG | ORDER | GAS SPRING | REPAIR KIT | FLANGE | CHARGING ADAPTER |
| DEU | BESTELLUNG | GASDRUCKFEDER | ERSATZTEILSATZ | FLANSCHE | LADEADAPTER |
| FRA | COMMANDE | RESSORT À GAZ | KIT DE RÉPARATION | BRIDE | RACCORD DE CHARGE |
| ITA | ORDINE | CILINDRO AD AZOTO | KIT DI MANUTENZIONE | FLANGE | ADATTATORE DI CARICO |
| ESP | PEDIDO | RESORTE DE GAS | KIT DE REPARACION | BRIDA | ADAPTADOR DE CARGA |
| POR | PEDIDO | CILINDRO DE GÁS | KIT DE MANUTENÇÃO | FLANGE | ADAPTADOR DE CARGA |

# CK 1000

*Low Profile*

AZOL GAS

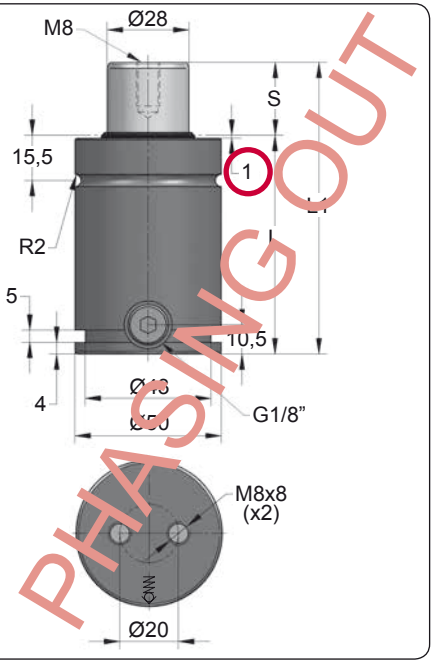


PHASING OUT

| ORDER | S (mm) | L1 ±0,25 (mm) | L (mm) | Kg. |
|---|---|---|---|---|
| CK 1000 012 | 12 | 74 | 62 | 0.65 |
| CK 1000 019 | 19 | 88 | 69 | 0.72 |
| CK 1000 025 | 25 | 100 | 75 | 0.77 |
| CK 1000 038 | 38 | 126 | 88 | 0.93 |
| CK 1000 050 | 50 | 150 | 100 | 1.02 |
| CK 1000 063 | 63 | 176 | 113 | 1.15 |
| CK 1000 080 | 80 | 210 | 130 | 1.35 |
| CK 1000 100 | 100 | 250 | 150 | 1.47 |

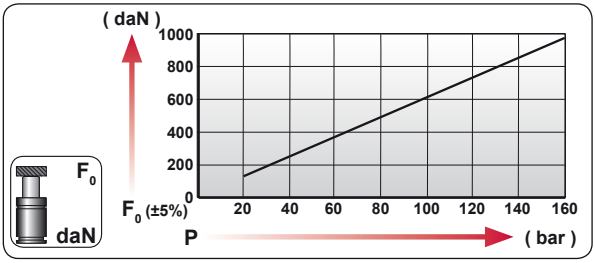


| CODE | bar | psi | F0 daN | F1 daN |
|---|---|---|---|---|
| CK 1000 050 | 160 | 2320 | 985 | 1710 |
| CK-H 1000 050 | 0 | 0 | --- | --- |

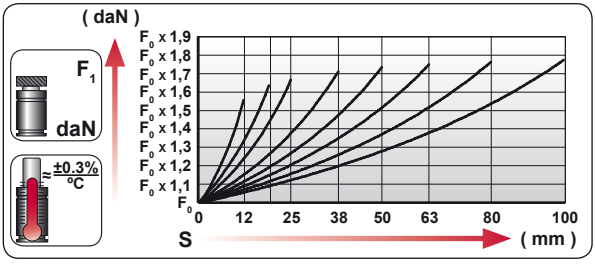


| | |
|---|---|
| ENG | ORDER |
| DEU | BESTELLUNG |
| FRA | COMMANDE |
| ITA | ORDINE |
| ESP | PEDIDO |
| POR | PEDIDO |

F0 daN — S mm

CK 1000 50

CK 1000 050

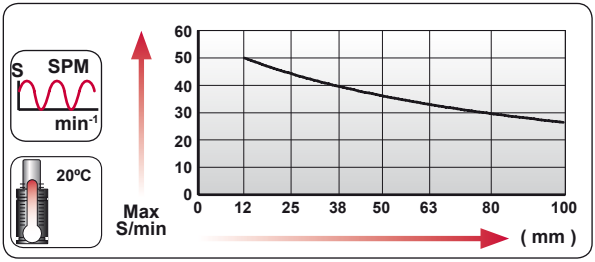


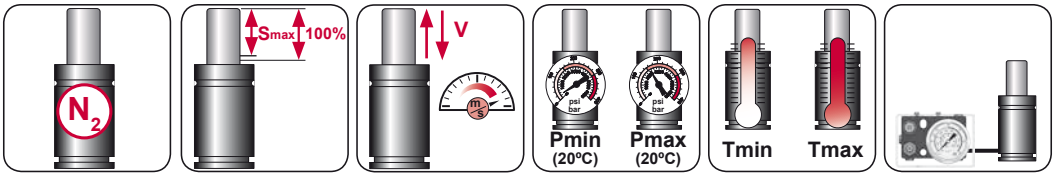


| $N_2$ | Smax < 90% | Vmax 1,6 m/s | bar psi 20 290 | bar psi 160 2320 | ºC ºF 0 32 | ºC ºF 80 176 | 600 CP- |
|---|---|---|---|---|---|---|---|

AZOL GAS

# CK 1000 MOUNTS

*Low Profile*

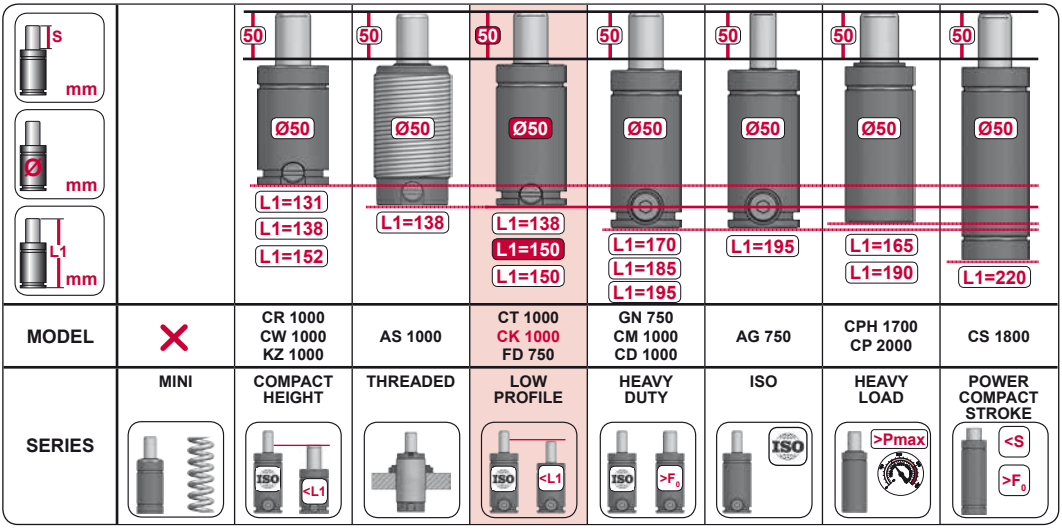


| MODEL | | CR 1000 CW 1000 KZ 1000 | AS 1000 | CT 1000 CK 1000 FD 750 | GN 750 CM 1000 CD 1000 | AG 750 | CPH 1700 CP 2000 | CS 1800 |
|---|---|---|---|---|---|---|---|---|
| SERIES | MINI | COMPACT HEIGHT | THREADED | LOW PROFILE | HEAVY DUTY | ISO | HEAVY LOAD | POWER COMPACT STROKE |




| CODE | | CK 1000 050 | KIT XXXXXXX-S KIT XXXXXXX-C | A14-050 | 18 GA 5 |
|---|---|---|---|---|---|
| ENG | ORDER | GAS SPRING | REPAIR KIT | FLANGE | CHARGING ADAPTER |
| DEU | BESTELLUNG | GASDRUCKFEDER | ERSATZTEILSATZ | FLANSCHE | LADEADAPTER |
| FRA | COMMANDE | RESSORT À GAZ | KIT DE RÉPARATION | BRIDE | RACCORD DE CHARGE |
| ITA | ORDINE | CILINDRO AD AZOTO | KIT DI MANUTENZIONE | FLANGE | ADATTATORE DI CARICO |
| ESP | PEDIDO | RESORTE DE GAS | KIT DE REPARACION | BRIDA | ADAPTADOR DE CARGA |
| POR | PEDIDO | CILINDRO DE GÁS | KIT DE MANUTENÇÃO | FLANGE | ADAPTADOR DE CARGA |

# CK 1000 V1

*Low Profile*

AZOL GAS

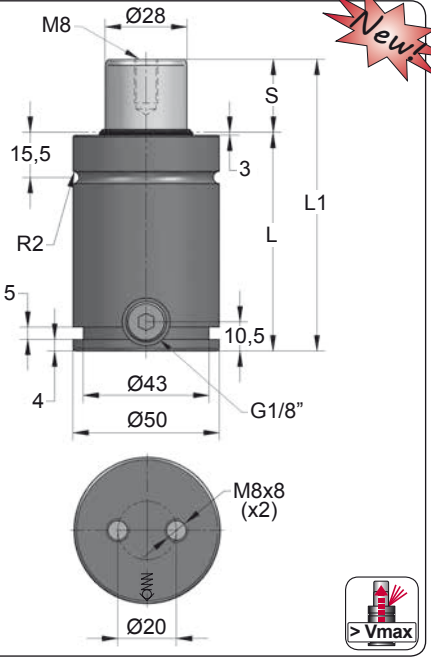


| ORDER | S (mm) | L1 ±0,25 (mm) | L (mm) | Kg. |
|---|---|---|---|---|
| CK 1000 012 V1 | 12 | 74 | 62 | 0.65 |
| CK 1000 019 V1 | 19 | 88 | 69 | 0.72 |
| CK 1000 025 V1 | 25 | 100 | 75 | 0.77 |
| CK 1000 038 V1 | 38 | 126 | 88 | 0.93 |
| CK 1000 050 V1 | 50 | 150 | 100 | 1.02 |
| CK 1000 063 V1 | 63 | 176 | 113 | 1.15 |
| CK 1000 080 V1 | 80 | 210 | 130 | 1.35 |
| CK 1000 100 V1 | 100 | 250 | 150 | 1.47 |

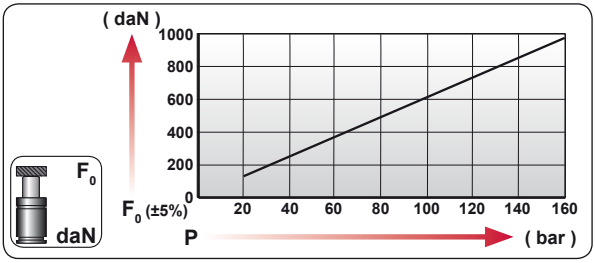


| CODE | bar | psi | $F_0$ daN | $F_1$ daN |
|---|---|---|---|---|
| CK 1000 050 V1 | 160 | 2320 | 985 | 1710 |
| CK-H 1000 050 V1 | 0 | 0 | --- | --- |

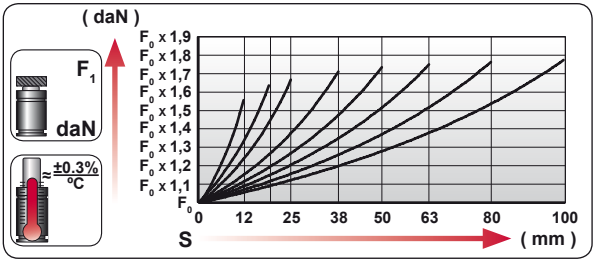


| | |
|---|---|
| ENG | ORDER |
| DEU | BESTELLUNG |
| FRA | COMMANDE |
| ITA | ORDINE |
| ESP | PEDIDO |
| POR | PEDIDO |

$F_0$ daN — S mm

CK 1000 50

CK 1000 050 V1

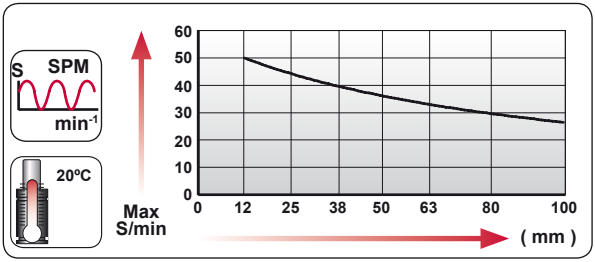


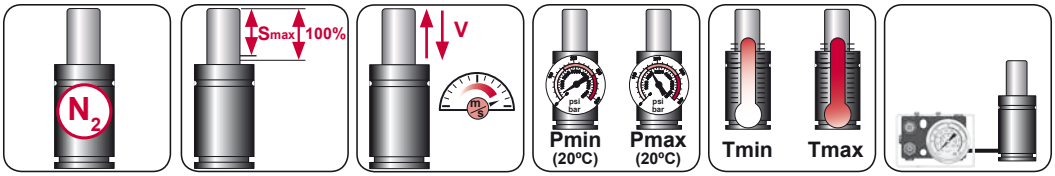


| $N_2$ | Smax < 90% | Vmax 1,6 m/s | bar psi 20 290 | bar psi 160 2320 | °C °F 0 32 | °C °F 80 176 | 600 CP- |
|---|---|---|---|---|---|---|---|

AZOL GAS

# CK 1000 V1 *MOUNTS*

*Low Profile*

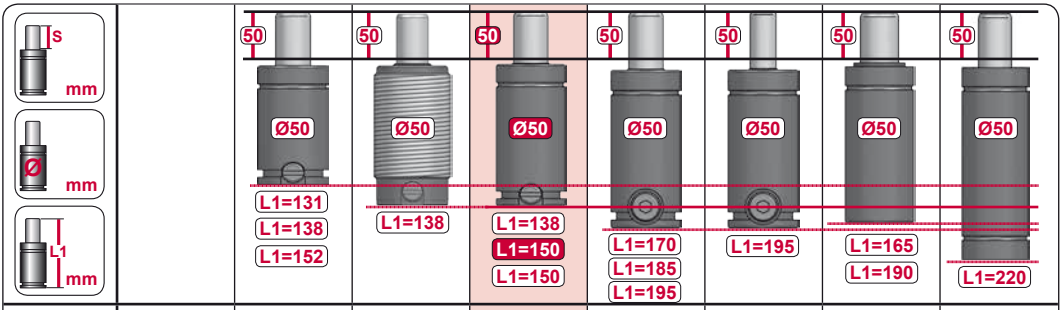


| MODEL | | CR 1000 CW 1000 KZ 1000 | AS 1000 | CT 1000 CK 1000 FD 750 | GN 750 CM 1000 CD 1000 | AG 750 | CPH 1700 CP 2000 | CS 1800 |
|---|---|---|---|---|---|---|---|---|
| SERIES | MINI | COMPACT HEIGHT | THREADED | LOW PROFILE | HEAVY DUTY | ISO | HEAVY LOAD | POWER COMPACT STROKE |

## A14-050

ISO E24.54.815.G EM24.54.700/F

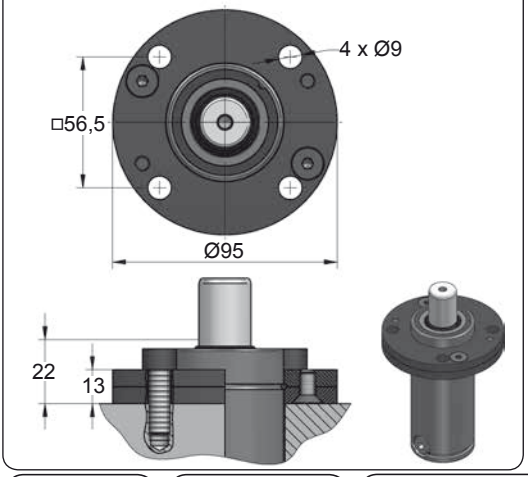


## A34-050

ISO VDI

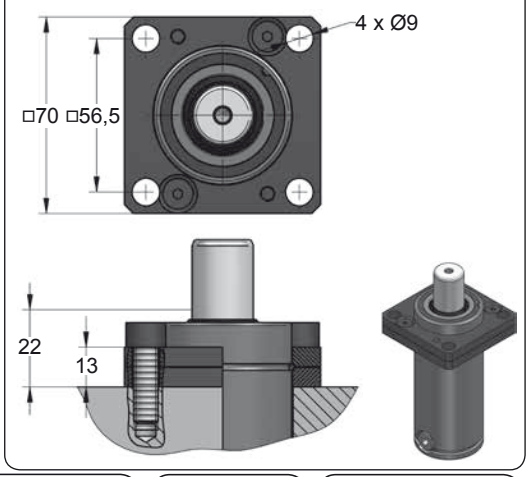





| CODE | | CK 1000 050 V1 | KIT XXXXXXX-S KIT XXXXXXX-C | A14-050 | 18 GA 5 |
|---|---|---|---|---|---|
| ENG | ORDER | GAS SPRING | REPAIR KIT | FLANGE | CHARGING ADAPTER |
| DEU | BESTELLUNG | GASDRUCKFEDER | ERSATZTEILSATZ | FLANSCHE | LADEADAPTER |
| FRA | COMMANDE | RESSORT À GAZ | KIT DE RÉPARATION | BRIDE | RACCORD DE CHARGE |
| ITA | ORDINE | CILINDRO AD AZOTO | KIT DI MANUTENZIONE | FLANGE | ADATTATORE DI CARICO |
| ESP | PEDIDO | RESORTE DE GAS | KIT DE REPARACION | BRIDA | ADAPTADOR DE CARGA |
| POR | PEDIDO | CILINDRO DE GÁS | KIT DE MANUTENÇÃO | FLANGE | ADAPTADOR DE CARGA |

# CK 1000 V1 MOUNTS

*Low Profile*

AZOL GAS

## B21-050

EM24.54.700/F

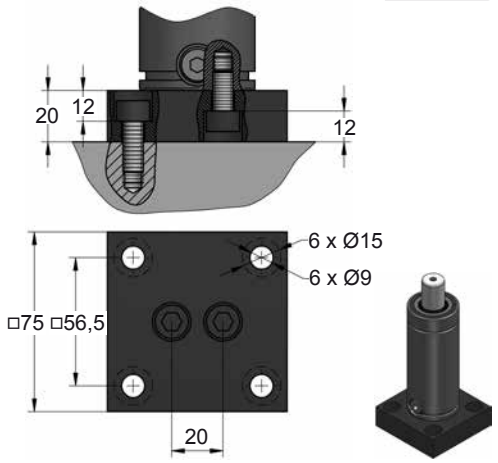


## B76-050

E24.54.815.G
EM24.54.700/F

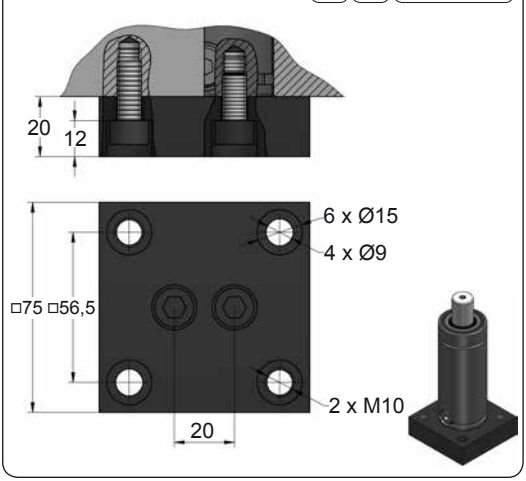


## C35-050

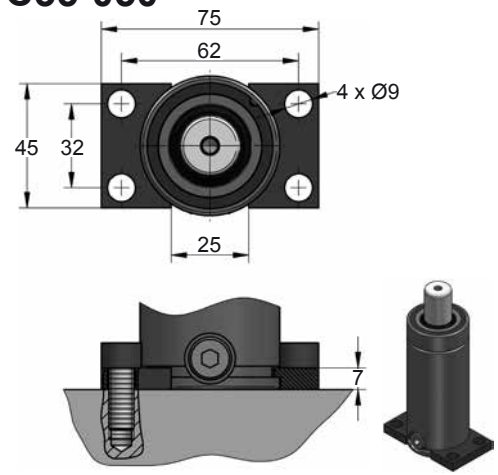


## C50-050

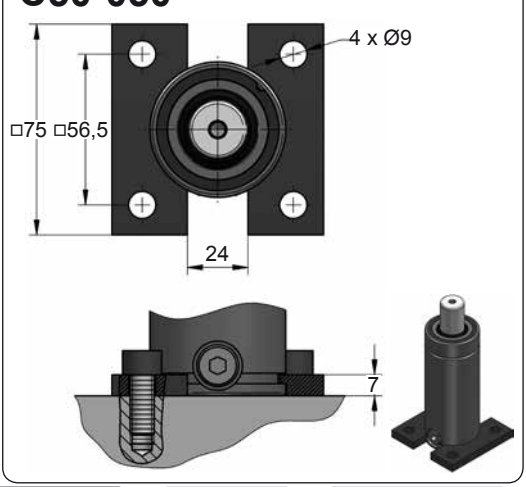









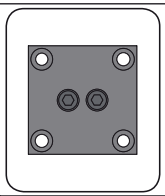

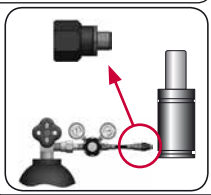

| CODE | | CK 1000 050 V1 | KIT XXXXXXX-S<br>KIT XXXXXXX-C | B21-050 | 18 GA 5 |
|---|---|---|---|---|---|
| ENG | ORDER | GAS SPRING | REPAIR KIT | FLANGE | CHARGING ADAPTER |
| DEU | BESTELLUNG | GASDRUCKFEDER | ERSATZTEILSATZ | FLANSCHE | LADEADAPTER |
| FRA | COMMANDE | RESSORT À GAZ | KIT DE RÉPARATION | BRIDE | RACCORD DE CHARGE |
| ITA | ORDINE | CILINDRO AD AZOTO | KIT DI MANUTENZIONE | FLANGE | ADATTATORE DI CARICO |
| ESP | PEDIDO | RESORTE DE GAS | KIT DE REPARACION | BRIDA | ADAPTADOR DE CARGA |
| POR | PEDIDO | CILINDRO DE GÁS | KIT DE MANUTENÇÃO | FLANGE | ADAPTADOR DE CARGA |

AZOL GAS

# CK 1000 V1 MOUNTS

*Low Profile*

## D02-050

ISO E24.54.815.G EM24.54.700/F

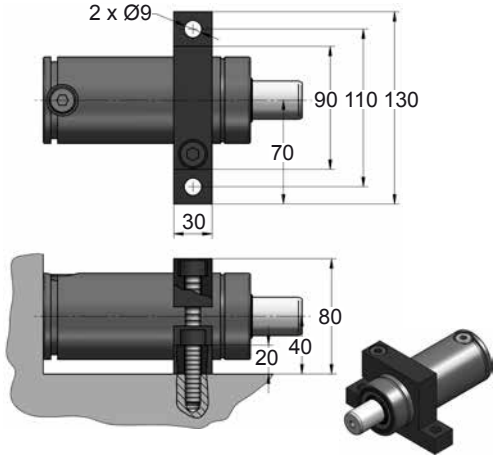


## D67-050

VDI

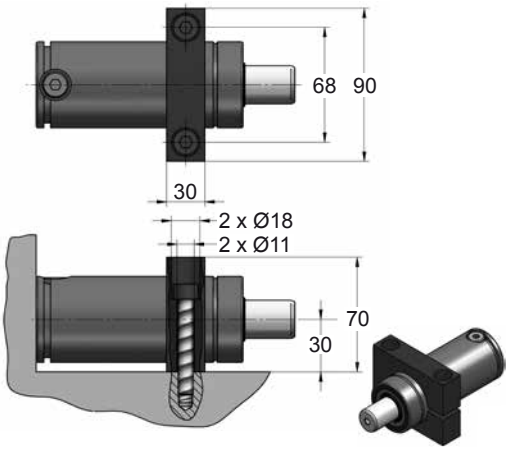









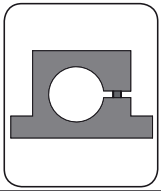

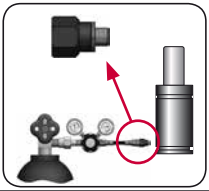

| CODE | | CK 1000 050 V1 | KIT XXXXXXX-S<br>KIT XXXXXXX-C | D02-050 | 18 GA 5 |
|---|---|---|---|---|---|
| ENG | ORDER | GAS SPRING | REPAIR KIT | FLANGE | CHARGING ADAPTER |
| DEU | BESTELLUNG | GASDRUCKFEDER | ERSATZTEILSATZ | FLANSCHE | LADEADAPTER |
| FRA | COMMANDE | RESSORT À GAZ | KIT DE RÉPARATION | BRIDE | RACCORD DE CHARGE |
| ITA | ORDINE | CILINDRO AD AZOTO | KIT DI MANUTENZIONE | FLANGE | ADATTATORE DI CARICO |
| ESP | PEDIDO | RESORTE DE GAS | KIT DE REPARACION | BRIDA | ADAPTADOR DE CARGA |
| POR | PEDIDO | CILINDRO DE GÁS | KIT DE MANUTENÇÃO | FLANGE | ADAPTADOR DE CARGA |

# CK 1500 V1

*Low Profile*

AZOL GAS

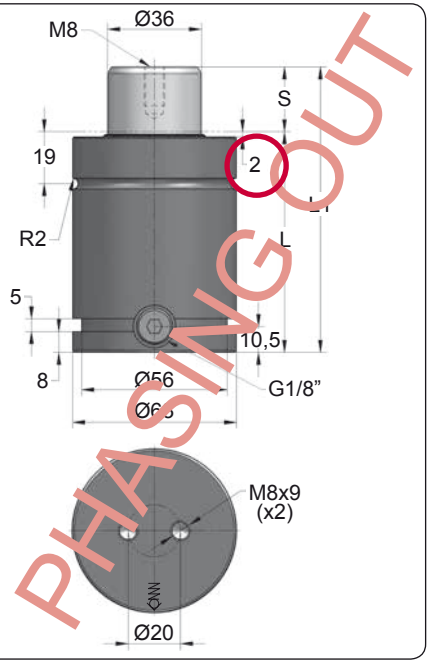


| ORDER | S (mm) | L1 ±0,25 (mm) | L (mm) | Kg. |
|---|---|---|---|---|
| CK 1500 012 V1 | 12 | 84 | 72 | 1.30 |
| CK 1500 025 V1 | 25 | 110 | 85 | 1.36 |
| CK 1500 038 V1 | 38 | 136 | 98 | 1.75 |
| CK 1500 050 V1 | 50 | 160 | 110 | 1.93 |
| CK 1500 063 V1 | 63 | 186 | 123 | 2.10 |
| CK 1500 080 V1 | 80 | 220 | 140 | 2.36 |
| CK 1500 100 V1 | 100 | 260 | 160 | 2.60 |

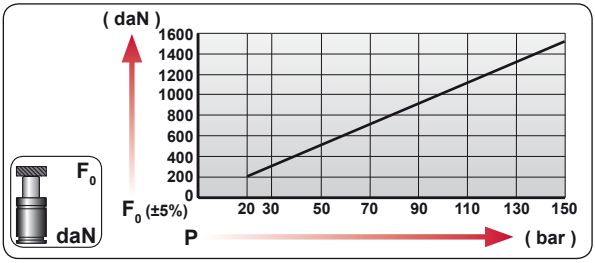


| CODE | bar | psi | $F_0$ daN | $F_1$ daN |
|---|---|---|---|---|
| CK 1500 050 V1 | 150 | 2175 | 1530 | 2605 |
| CK-H 1500 050 V1 | 0 | 0 | --- | --- |

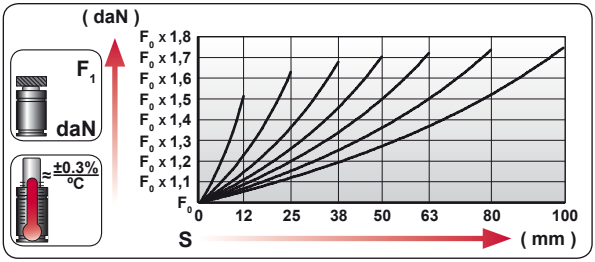


| | |
|---|---|
| ENG | ORDER |
| DEU | BESTELLUNG |
| FRA | COMMANDE |
| ITA | ORDINE |
| ESP | PEDIDO |
| POR | PEDIDO |

$F_0$ daN — S mm

CK 1500 50

CK 1500 050 V1

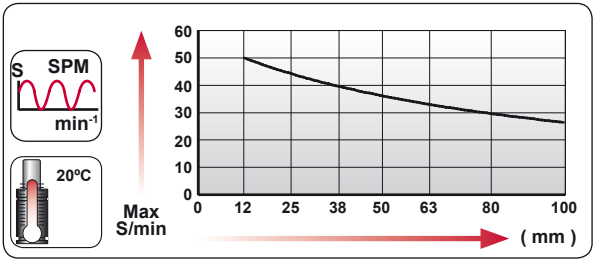


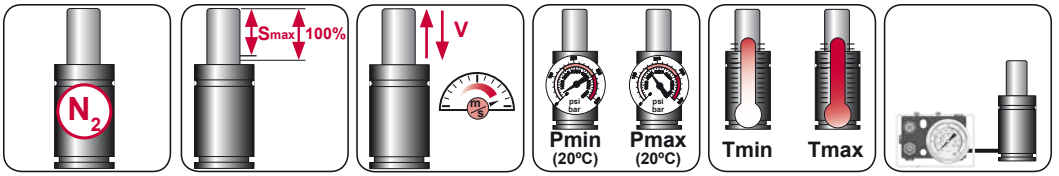


| $N_2$ | Smax < 90% | Vmax 1,6 m/s | bar psi 20 290 | bar psi 150 2175 | °C °F 0 32 | °C °F 80 176 | 600 CP- |
|---|---|---|---|---|---|---|---|

AZOL GAS

# CK 1500 V1 *MOUNTS*

*Low Profile*

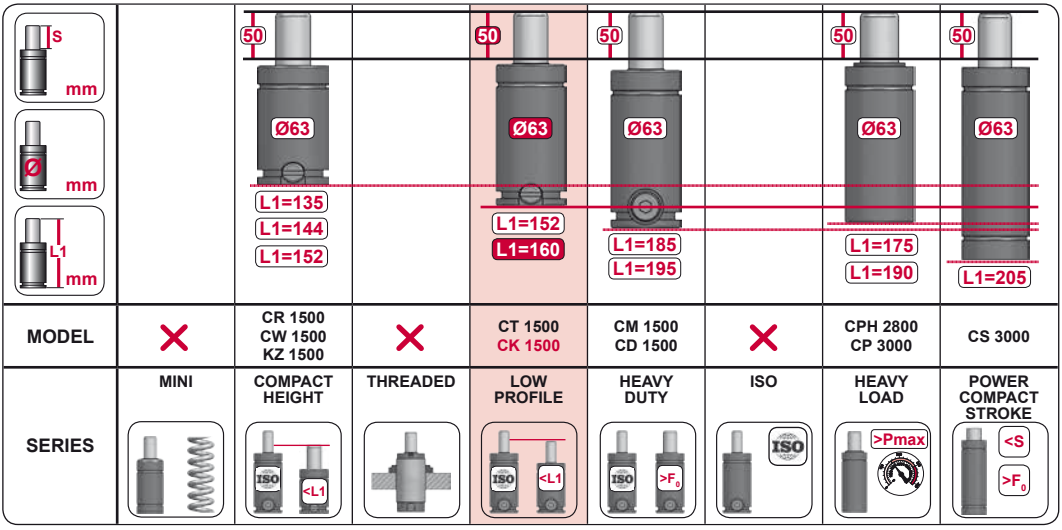


| | | | | | | | | |
|---|---|---|---|---|---|---|---|---|
| **MODEL** | ✕ | CR 1500<br>CW 1500<br>KZ 1500 | ✕ | CT 1500<br>CK 1500 | CM 1500<br>CD 1500 | ✕ | CPH 2800<br>CP 3000 | CS 3000 |
| **SERIES** | MINI | COMPACT HEIGHT | THREADED | LOW PROFILE | HEAVY DUTY | ISO | HEAVY LOAD | POWER COMPACT STROKE |




| CODE | | CK 1500 050 V1 | KIT XXXXXXX-S<br>KIT XXXXXXX-C | A14-063 | 18 GA 5 |
|---|---|---|---|---|---|
| ENG | ORDER | GAS SPRING | REPAIR KIT | FLANGE | CHARGING ADAPTER |
| DEU | BESTELLUNG | GASDRUCKFEDER | ERSATZTEILSATZ | FLANSCHE | LADEADAPTER |
| FRA | COMMANDE | RESSORT À GAZ | KIT DE RÉPARATION | BRIDE | RACCORD DE CHARGE |
| ITA | ORDINE | CILINDRO AD AZOTO | KIT DI MANUTENZIONE | FLANGE | ADATTATORE DI CARICO |
| ESP | PEDIDO | RESORTE DE GAS | KIT DE REPARACION | BRIDA | ADAPTADOR DE CARGA |
| POR | PEDIDO | CILINDRO DE GÁS | KIT DE MANUTENÇÃO | FLANGE | ADAPTADOR DE CARGA |

# CK 1500 V2

*Low Profile*

AZOL GAS

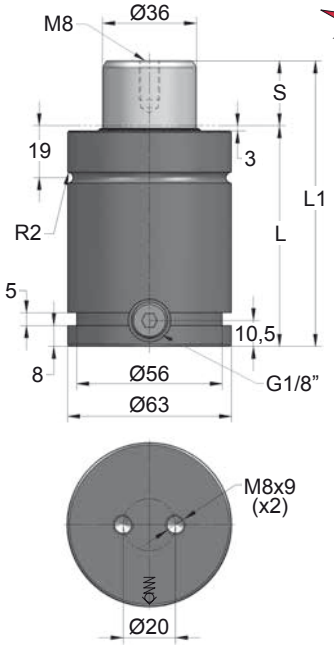


Newt

| ORDER | S (mm) | L1 ±0,25 (mm) | L (mm) | Kg. |
|---|---|---|---|---|
| CK 1500 012 V2 | 12 | 84 | 72 | 1.30 |
| CK 1500 025 V2 | 25 | 110 | 85 | 1.36 |
| CK 1500 038 V2 | 38 | 136 | 98 | 1.75 |
| CK 1500 050 V2 | 50 | 160 | 110 | 1.93 |
| CK 1500 063 V2 | 63 | 186 | 123 | 2.10 |
| CK 1500 080 V2 | 80 | 220 | 140 | 2.36 |
| CK 1500 100 V2 | 100 | 260 | 160 | 2.60 |

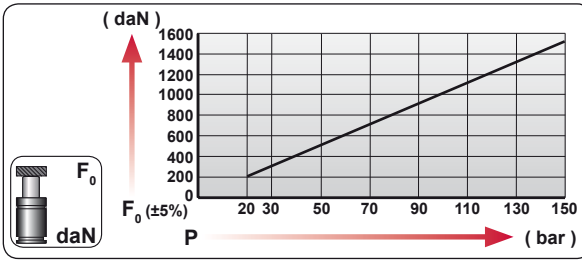


| CODE | bar | psi | F0 daN | F1 daN |
|---|---|---|---|---|
| CK 1500 050 V2 | 150 | 2175 | 1530 | 2605 |
| CK-H 1500 050 V2 | 0 | 0 | --- | --- |

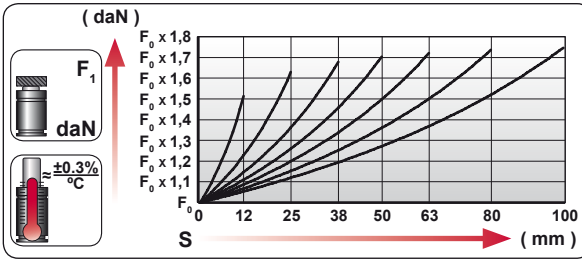


| | |
|---|---|
| ENG | ORDER |
| DEU | BESTELLUNG |
| FRA | COMMANDE |
| ITA | ORDINE |
| ESP | PEDIDO |
| POR | PEDIDO |

F0 daN — S mm

CK 1500 50

CK 1500 050 V2

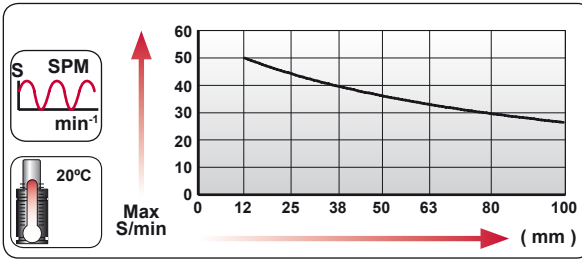


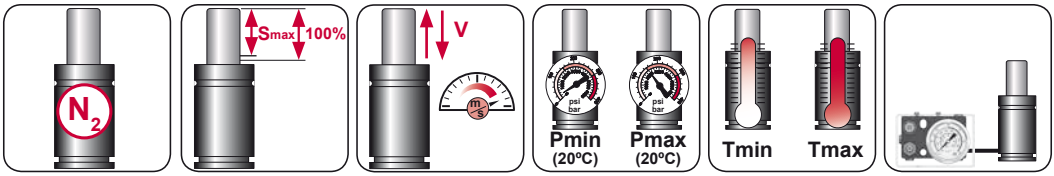


| $N_2$ | Smax < 90% | Vmax 1,6 m/s | bar psi 20 290 | bar psi 150 2175 | °C °F 0 32 | °C °F 80 176 | 600 CP- |
|---|---|---|---|---|---|---|---|

AZOL GAS

# CK 1500 V2 MOUNTS

*Low Profile*

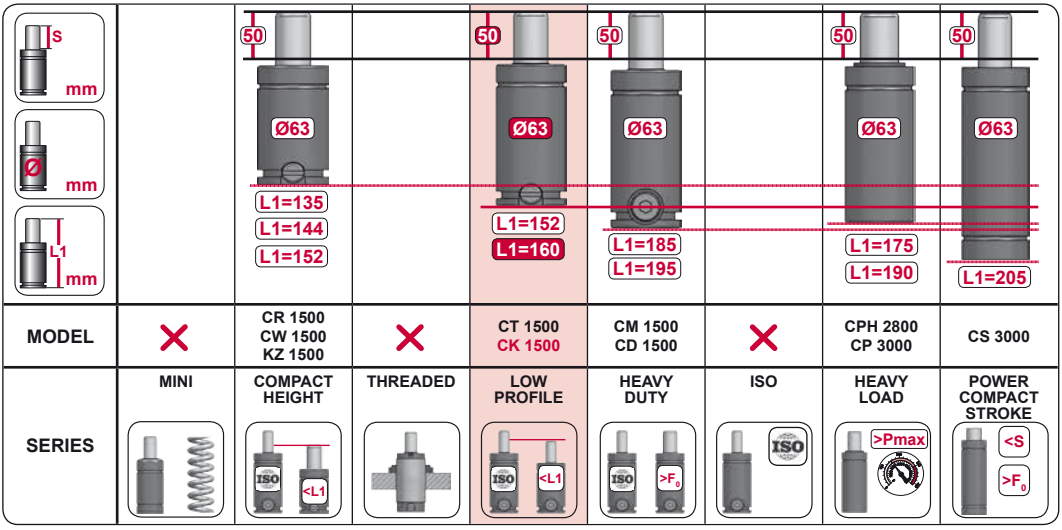


| MODEL | | CR 1500 CW 1500 KZ 1500 | | CT 1500 CK 1500 | CM 1500 CD 1500 | | CPH 2800 CP 3000 | CS 3000 |
|---|---|---|---|---|---|---|---|---|
| SERIES | MINI | COMPACT HEIGHT | THREADED | LOW PROFILE | HEAVY DUTY | ISO | HEAVY LOAD | POWER COMPACT STROKE |

## A14-063

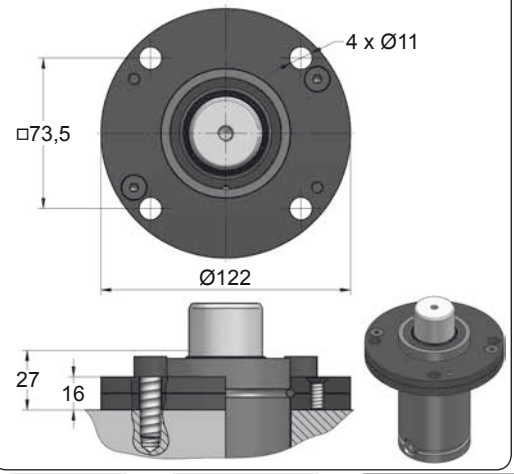


## A39-063

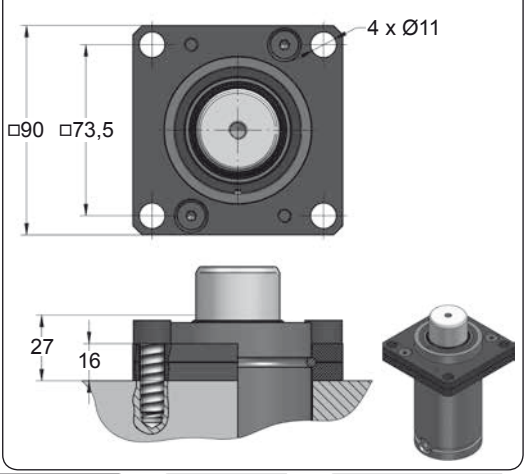









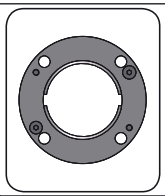

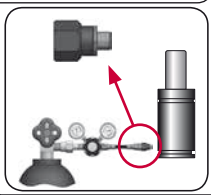

| CODE | | CK 1500 050 V2 | KIT XXXXXXX-S KIT XXXXXXX-C | A14-063 | 18 GA 5 |
|---|---|---|---|---|---|
| ENG | ORDER | GAS SPRING | REPAIR KIT | FLANGE | CHARGING ADAPTER |
| DEU | BESTELLUNG | GASDRUCKFEDER | ERSATZTEILSATZ | FLANSCHE | LADEADAPTER |
| FRA | COMMANDE | RESSORT À GAZ | KIT DE RÉPARATION | BRIDE | RACCORD DE CHARGE |
| ITA | ORDINE | CILINDRO AD AZOTO | KIT DI MANUTENZIONE | FLANGE | ADATTATORE DI CARICO |
| ESP | PEDIDO | RESORTE DE GAS | KIT DE REPARACION | BRIDA | ADAPTADOR DE CARGA |
| POR | PEDIDO | CILINDRO DE GÁS | KIT DE MANUTENÇÃO | FLANGE | ADAPTADOR DE CARGA |

# CK 1500 V2 MOUNTS

*Low Profile*

AZOL GAS

## A69-063

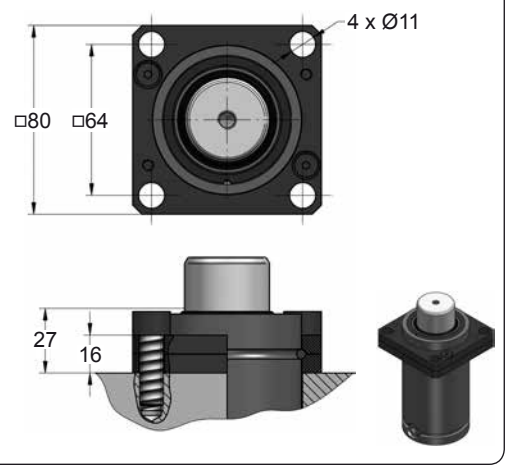


## B21-063

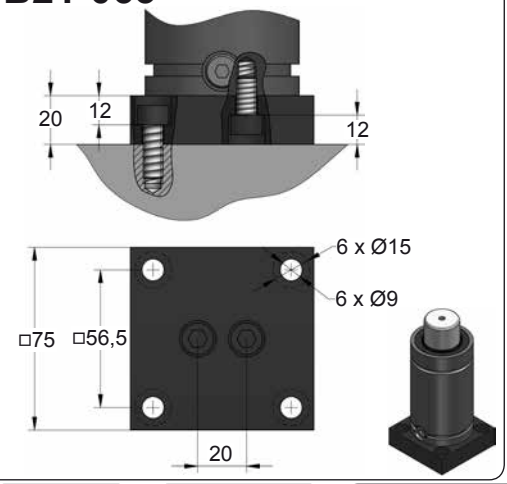


## B76-063

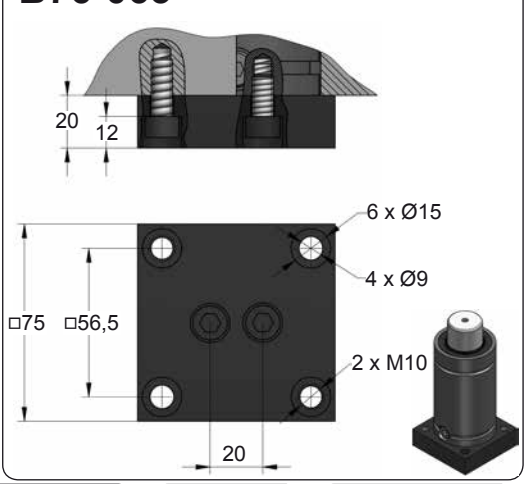









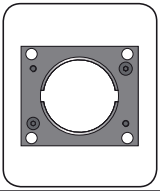

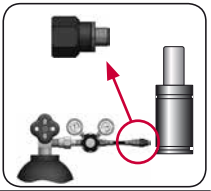

| CODE | | CK 1500 050 V2 | KIT XXXXXXX-S<br>KIT XXXXXXX-C | A69-063 | 18 GA 5 |
|---|---|---|---|---|---|
| ENG | ORDER | GAS SPRING | REPAIR KIT | FLANGE | CHARGING ADAPTER |
| DEU | BESTELLUNG | GASDRUCKFEDER | ERSATZTEILSATZ | FLANSCHE | LADEADAPTER |
| FRA | COMMANDE | RESSORT À GAZ | KIT DE RÉPARATION | BRIDE | RACCORD DE CHARGE |
| ITA | ORDINE | CILINDRO AD AZOTO | KIT DI MANUTENZIONE | FLANGE | ADATTATORE DI CARICO |
| ESP | PEDIDO | RESORTE DE GAS | KIT DE REPARACION | BRIDA | ADAPTADOR DE CARGA |
| POR | PEDIDO | CILINDRO DE GÁS | KIT DE MANUTENÇÃO | FLANGE | ADAPTADOR DE CARGA |

AZOL GAS

# CK 1500 V2 MOUNTS

*Low Profile*

## C05-063

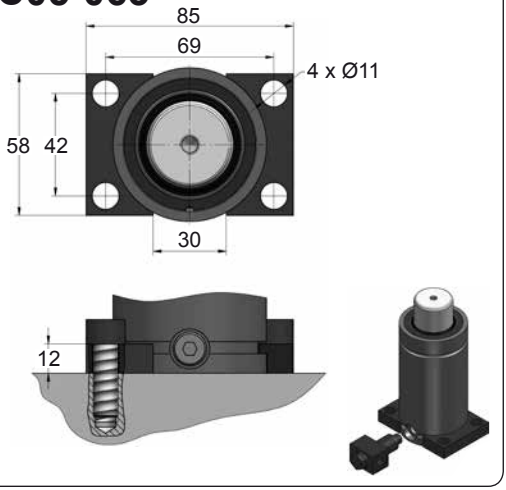


## C35-063

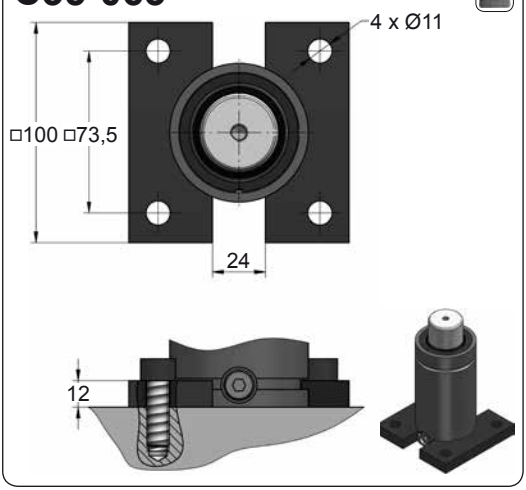


## D02-063

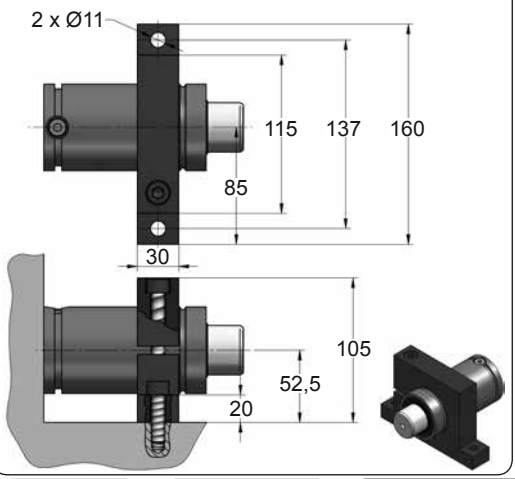


## D67-063

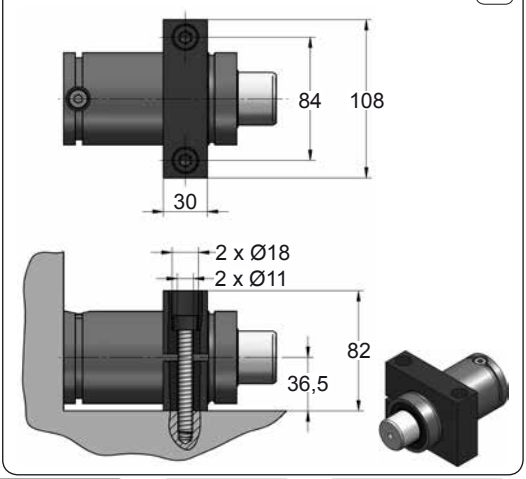





| CODE | | CK 1500 050 V2 | KIT XXXXXXX-S<br>KIT XXXXXXX-C | C05-063 | 18 GA 5 |
|---|---|---|---|---|---|
| ENG | ORDER | GAS SPRING | REPAIR KIT | FLANGE | CHARGING ADAPTER |
| DEU | BESTELLUNG | GASDRUCKFEDER | ERSATZTEILSATZ | FLANSCHE | LADEADAPTER |
| FRA | COMMANDE | RESSORT À GAZ | KIT DE RÉPARATION | BRIDE | RACCORD DE CHARGE |
| ITA | ORDINE | CILINDRO AD AZOTO | KIT DI MANUTENZIONE | FLANGE | ADATTATORE DI CARICO |
| ESP | PEDIDO | RESORTE DE GAS | KIT DE REPARACION | BRIDA | ADAPTADOR DE CARGA |
| POR | PEDIDO | CILINDRO DE GÁS | KIT DE MANUTENÇÃO | FLANGE | ADAPTADOR DE CARGA |

# CK 2500

*Low Profile*

AZOL GAS

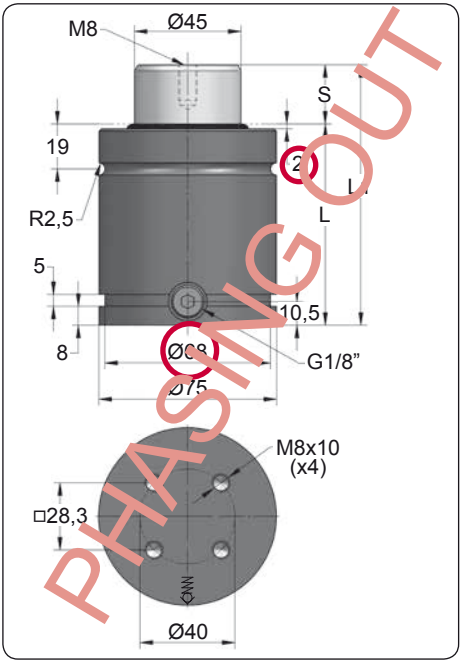


| ORDER | S (mm) | L1 ±0,25 (mm) | L (mm) | Kg. |
|---|---|---|---|---|
| CK 2500 012 | 12 | 84 | 72 | 2.00 |
| CK 2500 025 | 25 | 110 | 85 | 2.17 |
| CK 2500 038 | 38 | 136 | 98 | 2.44 |
| CK 2500 050 | 50 | 160 | 110 | 2.66 |
| CK 2500 063 | 63 | 186 | 123 | 2.94 |
| CK 2500 080 | 80 | 220 | 140 | 3.27 |
| CK 2500 100 | 100 | 260 | 160 | 3.50 |

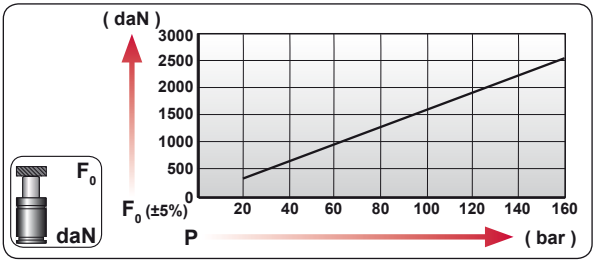


| CODE | bar | psi | F0 daN | F1 daN |
|---|---|---|---|---|
| CK 2500 050 | 160 | 2320 | 2545 | 4135 |
| CK-H 2500 050 | 0 | 0 | --- | --- |

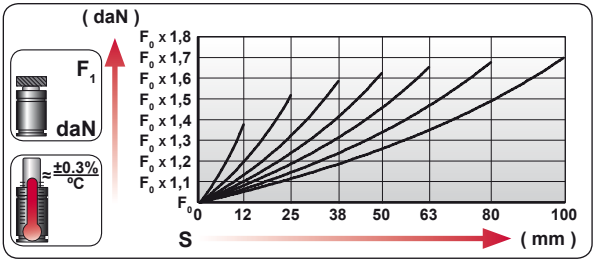


| | |
|---|---|
| ENG | ORDER |
| DEU | BESTELLUNG |
| FRA | COMMANDE |
| ITA | ORDINE |
| ESP | PEDIDO |
| POR | PEDIDO |

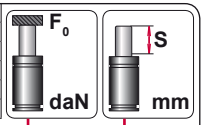


CK 2500 50

CK 2500 050

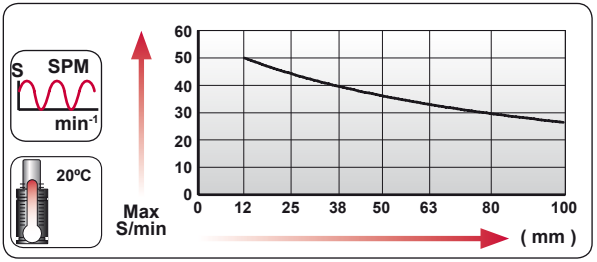


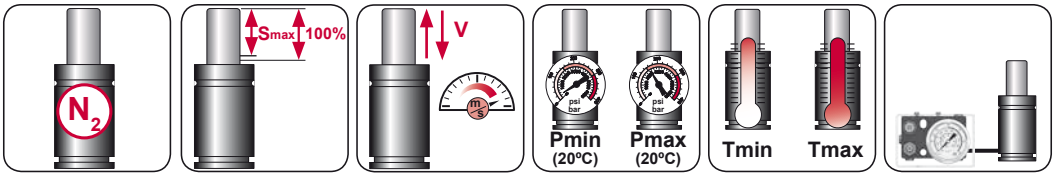


| $N_2$ | Smax < 90% | Vmax 1,6 m/s | bar psi 20 290 | bar psi 160 2320 | °C °F 0 32 | °C °F 80 176 | 600 CP- |
|---|---|---|---|---|---|---|---|

AZOL GAS

# CK 2500 MOUNTS

*Low Profile*

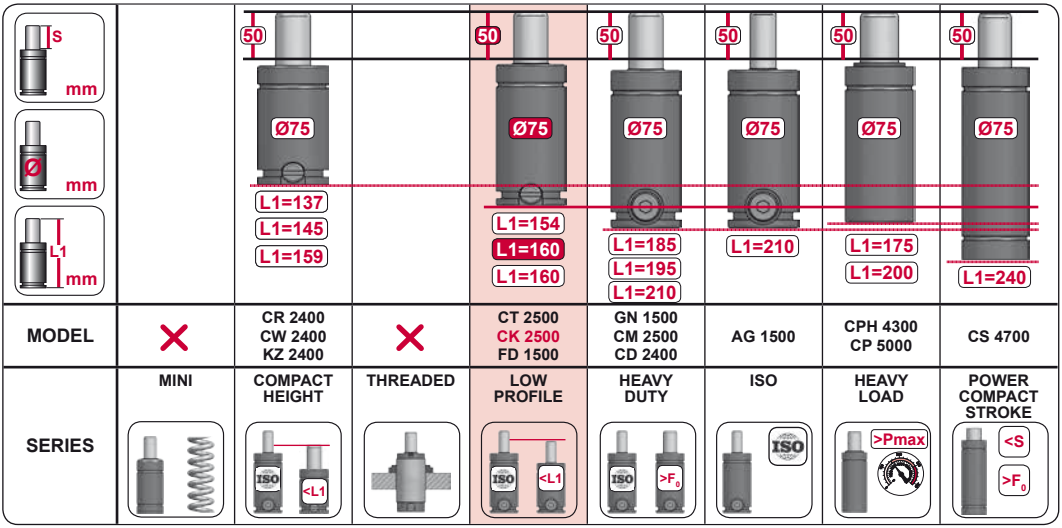


| | | | | | | | | |
|---|---|---|---|---|---|---|---|---|
| **MODEL** | ✕ | CR 2400<br>CW 2400<br>KZ 2400 | ✕ | CT 2500<br>CK 2500<br>FD 1500 | GN 1500<br>CM 2500<br>CD 2400 | AG 1500 | CPH 4300<br>CP 5000 | CS 4700 |
| **SERIES** | MINI | COMPACT HEIGHT | THREADED | LOW PROFILE | HEAVY DUTY | ISO | HEAVY LOAD | POWER COMPACT STROKE |




| CODE | | CK 2500 050 | KIT XXXXXXX-S<br>KIT XXXXXXX-C | A14-075 | 18 GA 5 |
|---|---|---|---|---|---|
| ENG | ORDER | GAS SPRING | REPAIR KIT | FLANGE | CHARGING ADAPTER |
| DEU | BESTELLUNG | GASDRUCKFEDER | ERSATZTEILSATZ | FLANSCHE | LADEADAPTER |
| FRA | COMMANDE | RESSORT À GAZ | KIT DE RÉPARATION | BRIDE | RACCORD DE CHARGE |
| ITA | ORDINE | CILINDRO AD AZOTO | KIT DI MANUTENZIONE | FLANGE | ADATTATORE DI CARICO |
| ESP | PEDIDO | RESORTE DE GAS | KIT DE REPARACION | BRIDA | ADAPTADOR DE CARGA |
| POR | PEDIDO | CILINDRO DE GÁS | KIT DE MANUTENÇÃO | FLANGE | ADAPTADOR DE CARGA |

# CK 2500 V1

*Low Profile*

AZOL GAS

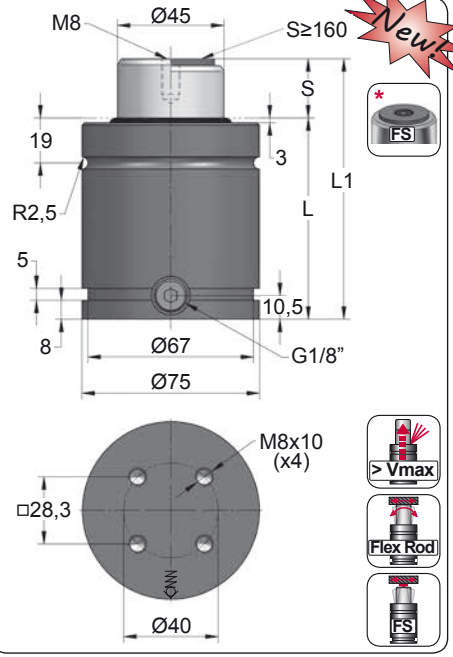


| ORDER | S (mm) | L1 ±0,25 (mm) | L (mm) | Kg. |
|---|---|---|---|---|
| CK 2500 012 V1 | 12 | 84 | 72 | 2.00 |
| CK 2500 025 V1 | 25 | 110 | 85 | 2.17 |
| CK 2500 038 V1 | 38 | 136 | 98 | 2.44 |
| CK 2500 050 V1 | 50 | 160 | 110 | 2.66 |
| CK 2500 063 V1 * | 63 | 186 | 123 | 2.94 |
| CK 2500 080 V1 * | 80 | 220 | 140 | 3.27 |
| CK 2500 100 V1 * | 100 | 260 | 160 | 3.50 |

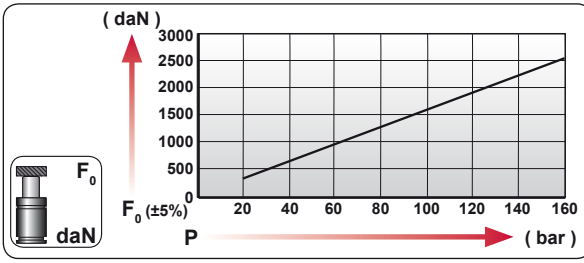


| CODE | bar | psi | $F_0$ daN | $F_1$ daN |
|---|---|---|---|---|
| CK 2500 050 V1 | 160 | 2320 | 2545 | 4135 |
| CK-H 2500 050 V1 | 0 | 0 | --- | --- |

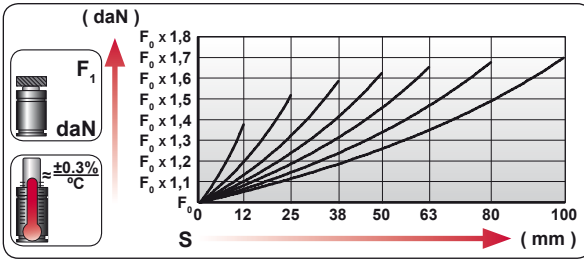


| ENG | ORDER |
|---|---|
| DEU | BESTELLUNG |
| FRA | COMMANDE |
| ITA | ORDINE |
| ESP | PEDIDO |
| POR | PEDIDO |

$F_0$ daN — S mm

CK 2500 50

CK 2500 050 V1

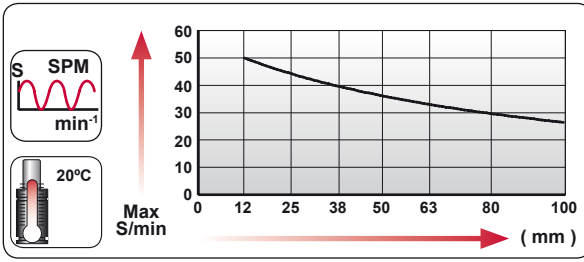


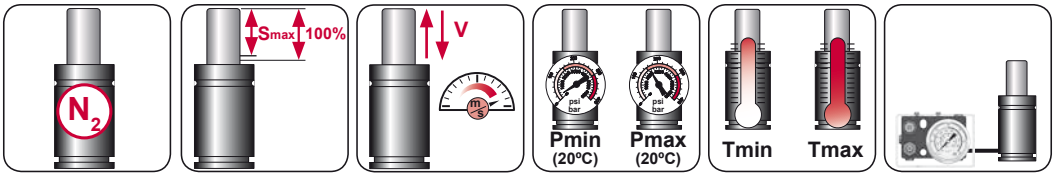


| $N_2$ | Smax < 90% | Vmax 1,6 m/s | bar psi 20 290 | bar psi 160 2320 | °C °F 0 32 | °C °F 80 176 | 600 CP- |
|---|---|---|---|---|---|---|---|

AZOL GAS

# CK 2500 V1 *MOUNTS*

*Low Profile*

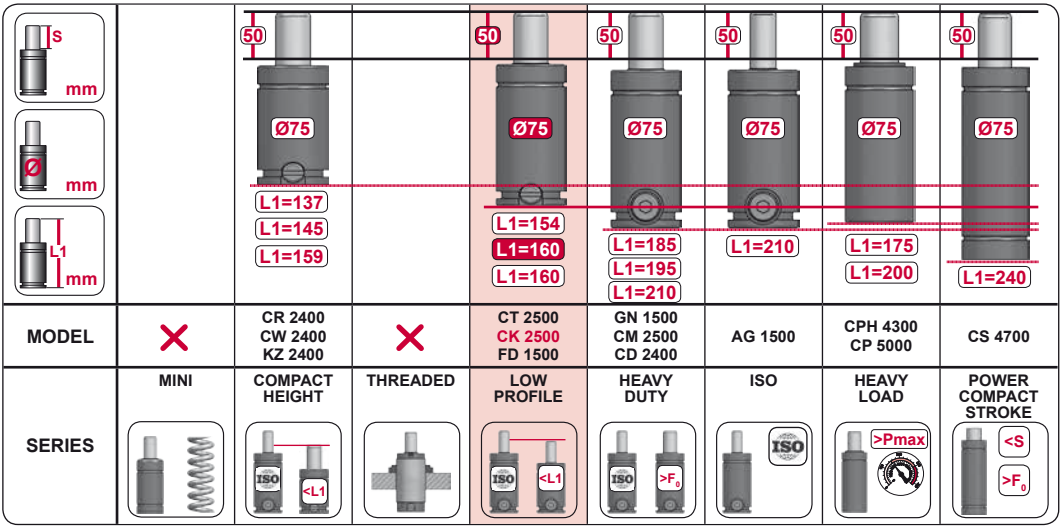


| | | | | | | | | |
|---|---|---|---|---|---|---|---|---|
| **MODEL** | ✕ | CR 2400<br>CW 2400<br>KZ 2400 | ✕ | CT 2500<br>CK 2500<br>FD 1500 | GN 1500<br>CM 2500<br>CD 2400 | AG 1500 | CPH 4300<br>CP 5000 | CS 4700 |
| **SERIES** | MINI | COMPACT HEIGHT | THREADED | LOW PROFILE | HEAVY DUTY | ISO | HEAVY LOAD | POWER COMPACT STROKE |

## A14-075

ISO E24.54.815.G EM24.54.700/F

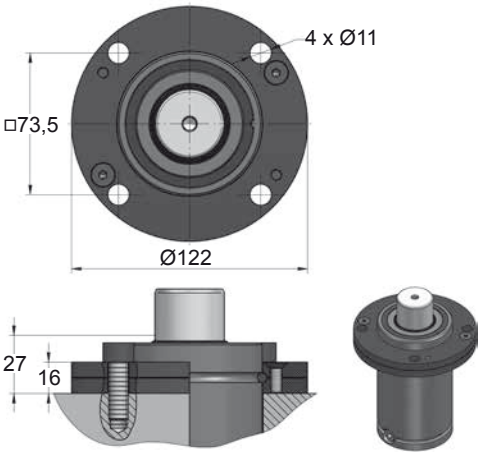


## A34-075

ISO VDI

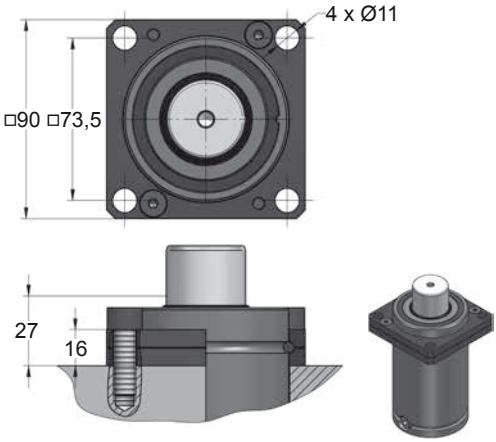





| CODE | | CK 2500 050 V1 | KIT XXXXXXX-S<br>KIT XXXXXXX-C | A14-075 | 18 GA 5 |
|---|---|---|---|---|---|
| ENG | ORDER | GAS SPRING | REPAIR KIT | FLANGE | CHARGING ADAPTER |
| DEU | BESTELLUNG | GASDRUCKFEDER | ERSATZTEILSATZ | FLANSCHE | LADEADAPTER |
| FRA | COMMANDE | RESSORT À GAZ | KIT DE RÉPARATION | BRIDE | RACCORD DE CHARGE |
| ITA | ORDINE | CILINDRO AD AZOTO | KIT DI MANUTENZIONE | FLANGE | ADATTATORE DI CARICO |
| ESP | PEDIDO | RESORTE DE GAS | KIT DE REPARACION | BRIDA | ADAPTADOR DE CARGA |
| POR | PEDIDO | CILINDRO DE GÁS | KIT DE MANUTENÇÃO | FLANGE | ADAPTADOR DE CARGA |

# CK 2500 V1 MOUNTS

*Low Profile*

AZOL GAS

## B21-075

EM24.54.700/F

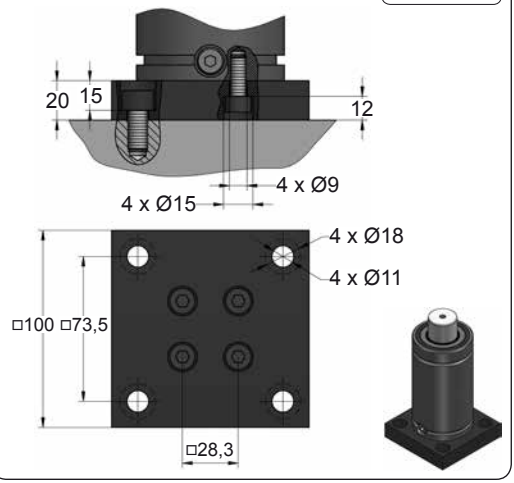


## B76-075

ISO

E24.54.815.G
EM24.54.700/F

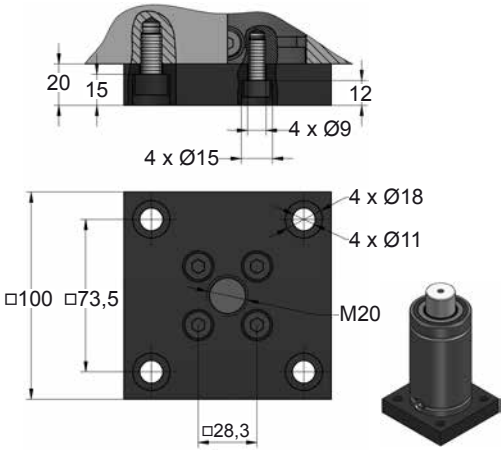


## C05-075

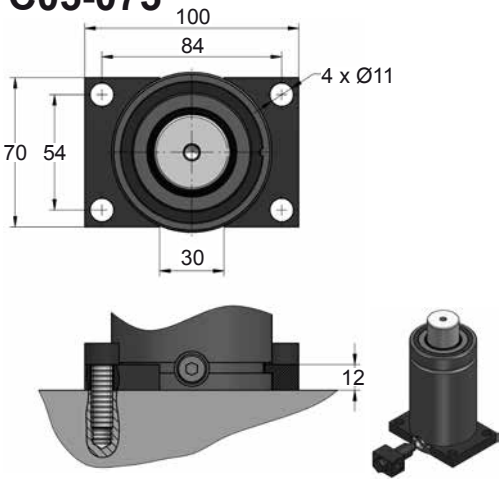


## C20-075

ISO
VDI

E24.54.815.G
EM24.54.700/F

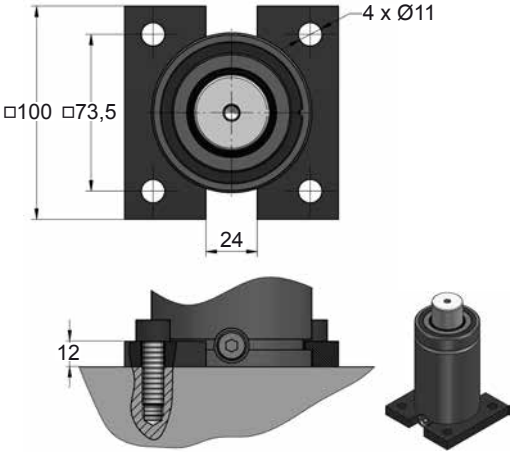









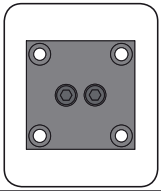

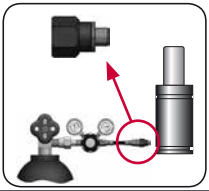

| CODE | | CK 2500 050 V1 | KIT XXXXXXX-S<br>KIT XXXXXXX-C | B21-075 | 18 GA 5 |
|---|---|---|---|---|---|
| ENG | ORDER | GAS SPRING | REPAIR KIT | FLANGE | CHARGING ADAPTER |
| DEU | BESTELLUNG | GASDRUCKFEDER | ERSATZTEILSATZ | FLANSCHE | LADEADAPTER |
| FRA | COMMANDE | RESSORT À GAZ | KIT DE RÉPARATION | BRIDE | RACCORD DE CHARGE |
| ITA | ORDINE | CILINDRO AD AZOTO | KIT DI MANUTENZIONE | FLANGE | ADATTATORE DI CARICO |
| ESP | PEDIDO | RESORTE DE GAS | KIT DE REPARACION | BRIDA | ADAPTADOR DE CARGA |
| POR | PEDIDO | CILINDRO DE GÁS | KIT DE MANUTENÇÃO | FLANGE | ADAPTADOR DE CARGA |

AZOL GAS

# CK 2500 V1 *MOUNTS*

*Low Profile*

## D02-075

ISO E24.54.815.G EM24.54.700/F

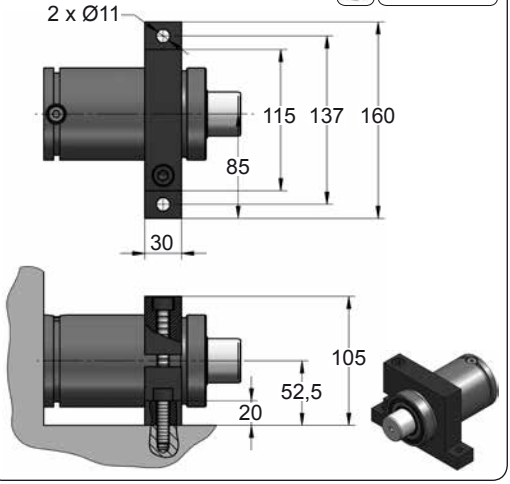


## D67-075

VDI

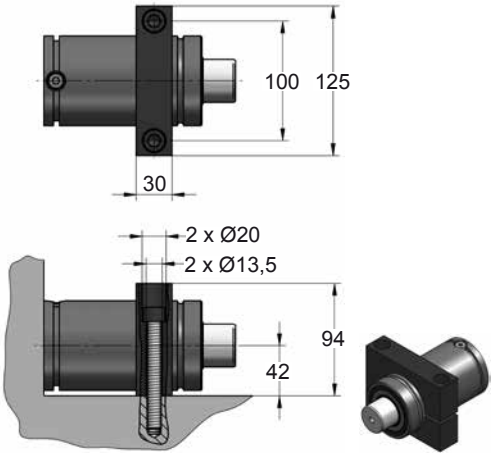









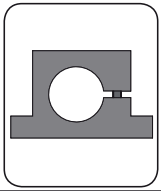

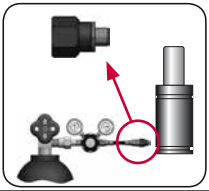

| CODE | | CK 2500 050 V1 | KIT XXXXXXX-S<br>KIT XXXXXXX-C | D02-075 | 18 GA 5 |
|---|---|---|---|---|---|
| ENG | ORDER | GAS SPRING | REPAIR KIT | FLANGE | CHARGING ADAPTER |
| DEU | BESTELLUNG | GASDRUCKFEDER | ERSATZTEILSATZ | FLANSCHE | LADEADAPTER |
| FRA | COMMANDE | RESSORT À GAZ | KIT DE RÉPARATION | BRIDE | RACCORD DE CHARGE |
| ITA | ORDINE | CILINDRO AD AZOTO | KIT DI MANUTENZIONE | FLANGE | ADATTATORE DI CARICO |
| ESP | PEDIDO | RESORTE DE GAS | KIT DE REPARACION | BRIDA | ADAPTADOR DE CARGA |
| POR | PEDIDO | CILINDRO DE GÁS | KIT DE MANUTENÇÃO | FLANGE | ADAPTADOR DE CARGA |

# CK 4000

*Low Profile*

AZOL GAS

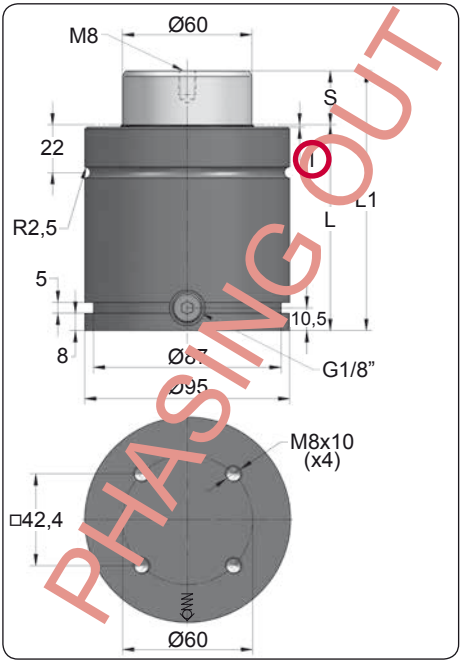


| ORDER | S (mm) | L1 ±0,25 (mm) | L (mm) | Kg. |
|---|---|---|---|---|
| CK 4000 025 | 25 | 120 | 95 | 4.19 |
| CK 4000 038 | 38 | 146 | 108 | 4.53 |
| CK 4000 050 | 50 | 170 | 120 | 4.83 |
| CK 4000 063 | 63 | 196 | 133 | 5.17 |
| CK 4000 080 | 80 | 230 | 150 | 5.60 |
| CK 4000 100 | 100 | 270 | 170 | 6.12 |

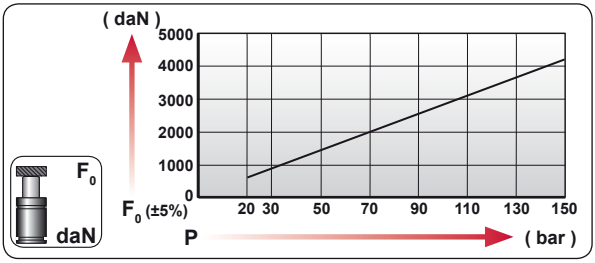


| CODE | bar | psi | F0 daN | F1 daN |
|---|---|---|---|---|
| CK 4000 050 | 140 | 2030 | 3960 | 7415 |
| CK-H 4000 050 | 0 | 0 | --- | --- |

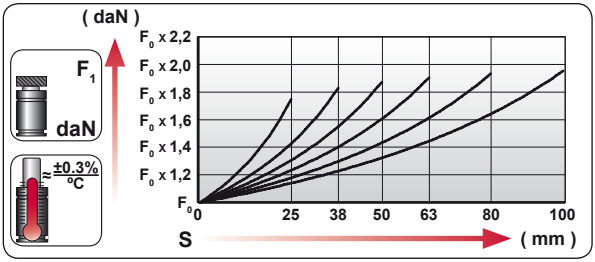


| ENG | ORDER |
|---|---|
| DEU | BESTELLUNG |
| FRA | COMMANDE |
| ITA | ORDINE |
| ESP | PEDIDO |
| POR | PEDIDO |

F0 daN — S mm

CK 4000 50

CK 4000 050

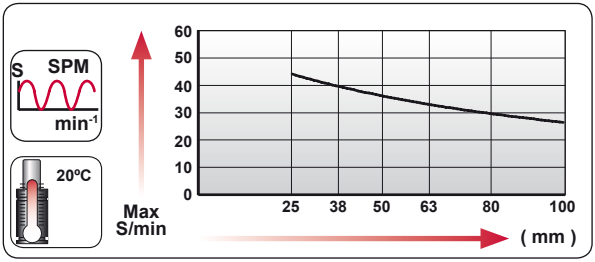


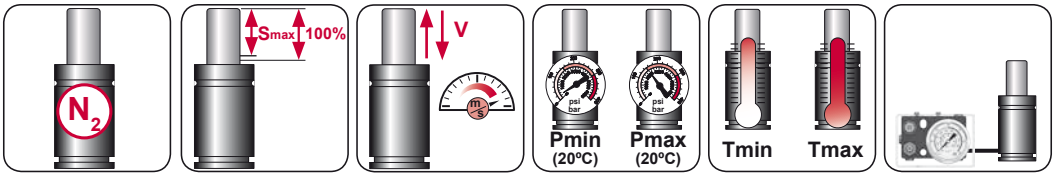


| $N_2$ | Smax < 90% | Vmax 1,6 m/s | bar psi 20 290 | bar psi 150 2175 | °C °F 0 32 | °C °F 80 176 | 600 CP- |
|---|---|---|---|---|---|---|---|

AZOL GAS

# CK 4000 MOUNTS

*Low Profile*

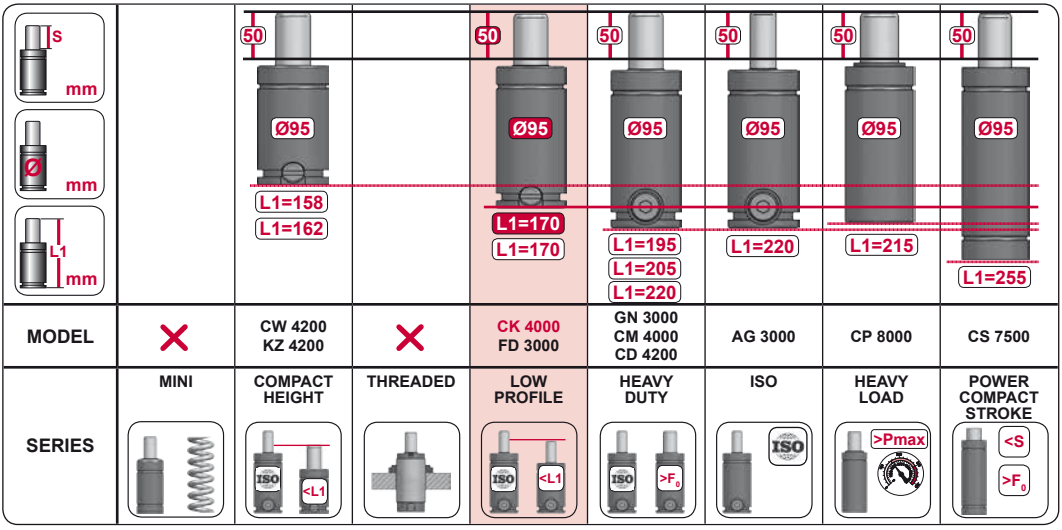


| MODEL | × | CW 4200 KZ 4200 | × | CK 4000 FD 3000 | GN 3000 CM 4000 CD 4200 | AG 3000 | CP 8000 | CS 7500 |
|---|---|---|---|---|---|---|---|---|
| SERIES | MINI | COMPACT HEIGHT | THREADED | LOW PROFILE | HEAVY DUTY | ISO | HEAVY LOAD | POWER COMPACT STROKE |




| CODE | | CK 4000 050 | KIT XXXXXXX-S<br>KIT XXXXXXX-C | A14-095 | 18 GA 5 |
|---|---|---|---|---|---|
| ENG | ORDER | GAS SPRING | REPAIR KIT | FLANGE | CHARGING ADAPTER |
| DEU | BESTELLUNG | GASDRUCKFEDER | ERSATZTEILSATZ | FLANSCHE | LADEADAPTER |
| FRA | COMMANDE | RESSORT À GAZ | KIT DE RÉPARATION | BRIDE | RACCORD DE CHARGE |
| ITA | ORDINE | CILINDRO AD AZOTO | KIT DI MANUTENZIONE | FLANGE | ADATTATORE DI CARICO |
| ESP | PEDIDO | RESORTE DE GAS | KIT DE REPARACION | BRIDA | ADAPTADOR DE CARGA |
| POR | PEDIDO | CILINDRO DE GÁS | KIT DE MANUTENÇÃO | FLANGE | ADAPTADOR DE CARGA |

# CK 4000 V1

*Low Profile*

AZOL GAS

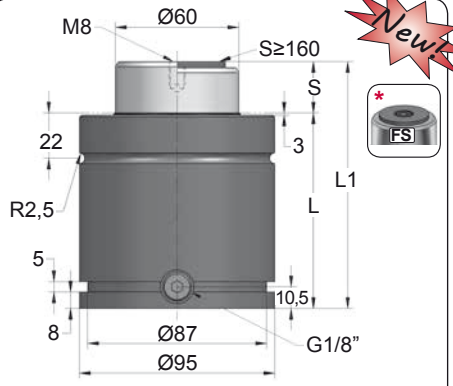


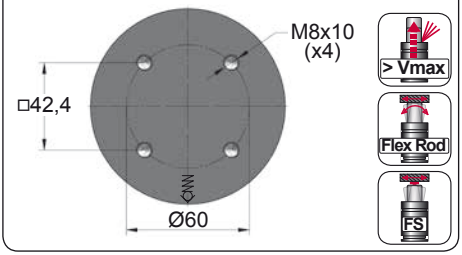


Newt

* FS

> Vmax

Flex Rod

FS

| ORDER | S (mm) | L1 ±0,25 (mm) | L (mm) | Kg. |
|---|---|---|---|---|
| CK 4000 025 V1 | 25 | 120 | 95 | 4.19 |
| CK 4000 038 V1 | 38 | 146 | 108 | 4.53 |
| CK 4000 050 V1 | 50 | 170 | 120 | 4.83 |
| CK 4000 063 V1 * | 63 | 196 | 133 | 5.17 |
| CK 4000 080 V1 * | 80 | 230 | 150 | 5.60 |
| CK 4000 100 V1 * | 100 | 270 | 170 | 6.12 |

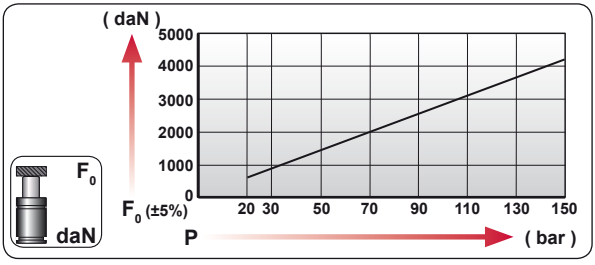


| CODE | bar | psi | $F_0$ daN | $F_1$ daN |
|---|---|---|---|---|
| CK 4000 050 V1 | 140 | 2030 | 3960 | 7415 |
| CK-H 4000 050 V1 | 0 | 0 | --- | --- |

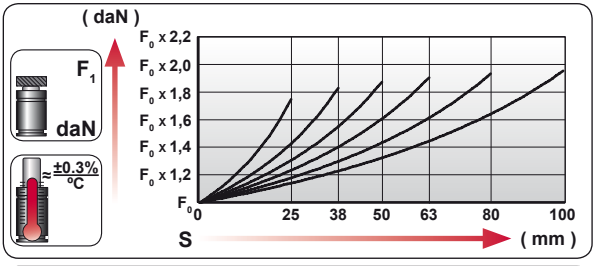


| | |
|---|---|
| ENG | ORDER |
| DEU | BESTELLUNG |
| FRA | COMMANDE |
| ITA | ORDINE |
| ESP | PEDIDO |
| POR | PEDIDO |

$F_0$ daN — S mm

CK 4000 50

CK 4000 050 V1

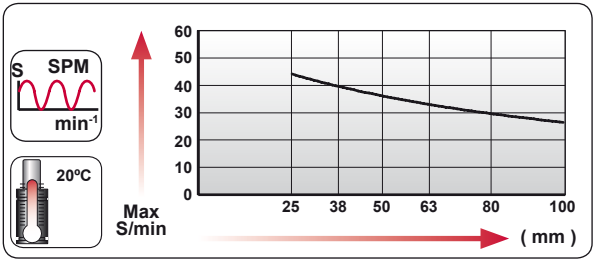


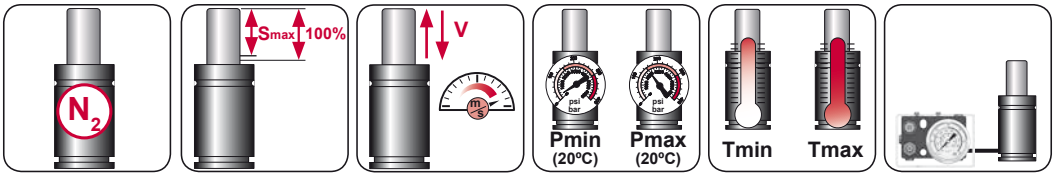


| $N_2$ | Smax < 90% | Vmax 1,6 m/s | bar psi 20 290 | bar psi 150 2175 | °C °F 0 32 | °C °F 80 176 | 600 CP- |
|---|---|---|---|---|---|---|---|

AZOL GAS

# CK 4000 V1 MOUNTS

*Low Profile*

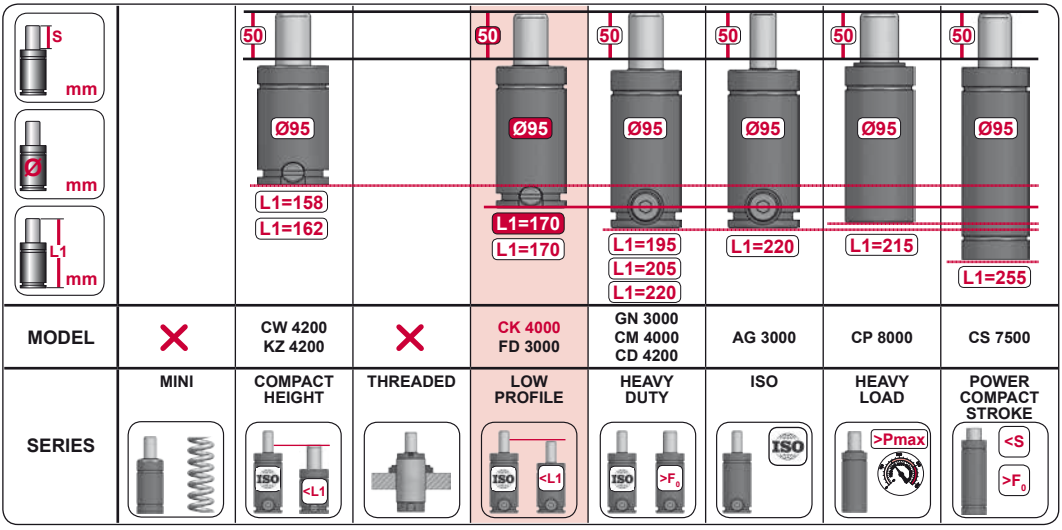


| MODEL | | CW 4200 KZ 4200 | | CK 4000 FD 3000 | GN 3000 CM 4000 CD 4200 | AG 3000 | CP 8000 | CS 7500 |
|---|---|---|---|---|---|---|---|---|
| SERIES | MINI | COMPACT HEIGHT | THREADED | LOW PROFILE | HEAVY DUTY | ISO | HEAVY LOAD | POWER COMPACT STROKE |

## A14-095

E24.54.815.G
EM24.54.700/F

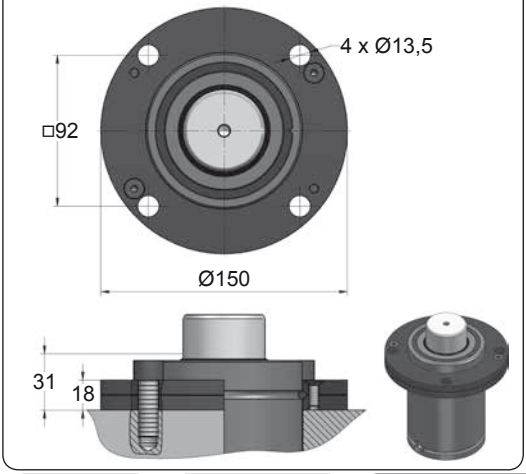


## A34-095

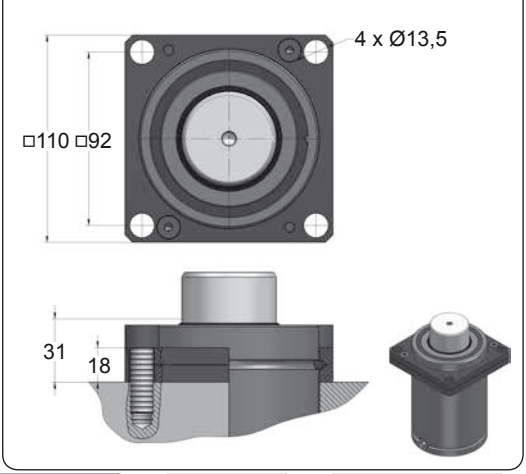





| CODE | | CK 4000 050 V1 | KIT XXXXXXX-S KIT XXXXXXX-C | A14-095 | 18 GA 5 |
|---|---|---|---|---|---|
| ENG | ORDER | GAS SPRING | REPAIR KIT | FLANGE | CHARGING ADAPTER |
| DEU | BESTELLUNG | GASDRUCKFEDER | ERSATZTEILSATZ | FLANSCHE | LADEADAPTER |
| FRA | COMMANDE | RESSORT À GAZ | KIT DE RÉPARATION | BRIDE | RACCORD DE CHARGE |
| ITA | ORDINE | CILINDRO AD AZOTO | KIT DI MANUTENZIONE | FLANGE | ADATTATORE DI CARICO |
| ESP | PEDIDO | RESORTE DE GAS | KIT DE REPARACION | BRIDA | ADAPTADOR DE CARGA |
| POR | PEDIDO | CILINDRO DE GÁS | KIT DE MANUTENÇÃO | FLANGE | ADAPTADOR DE CARGA |

# CK 4000 V1 MOUNTS

*Low Profile*

AZOL GAS

## B21-095

EM24.54.700/F

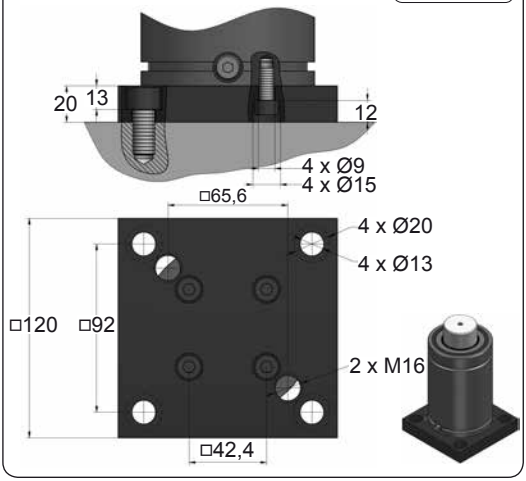


## B76-095

ISO DIN EM24.54.700/F

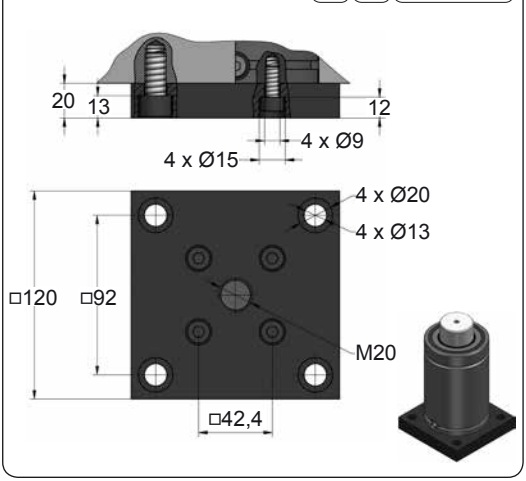


## C05-095

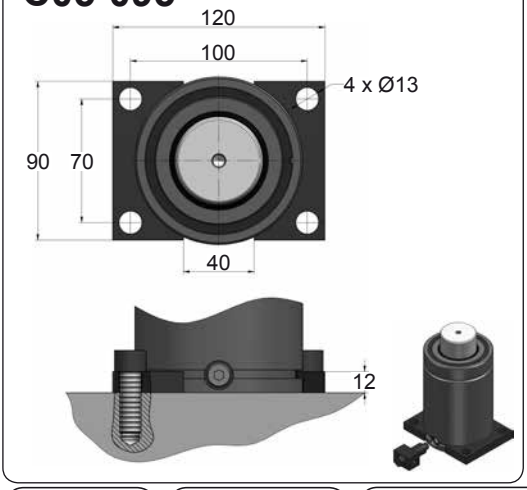


## C20-095

ISO DIN VDI E24.54.815.G EM24.54.700/F

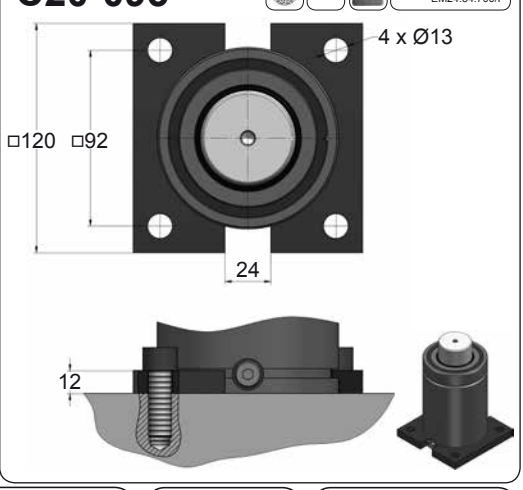









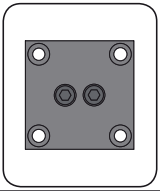

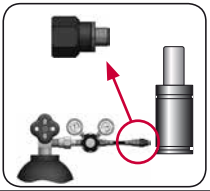

| CODE | | CK 4000 050 V1 | KIT XXXXXXX-S<br>KIT XXXXXXX-C | B21-095 | 18 GA 5 |
|---|---|---|---|---|---|
| ENG | ORDER | GAS SPRING | REPAIR KIT | FLANGE | CHARGING ADAPTER |
| DEU | BESTELLUNG | GASDRUCKFEDER | ERSATZTEILSATZ | FLANSCHE | LADEADAPTER |
| FRA | COMMANDE | RESSORT À GAZ | KIT DE RÉPARATION | BRIDE | RACCORD DE CHARGE |
| ITA | ORDINE | CILINDRO AD AZOTO | KIT DI MANUTENZIONE | FLANGE | ADATTATORE DI CARICO |
| ESP | PEDIDO | RESORTE DE GAS | KIT DE REPARACION | BRIDA | ADAPTADOR DE CARGA |
| POR | PEDIDO | CILINDRO DE GÁS | KIT DE MANUTENÇÃO | FLANGE | ADAPTADOR DE CARGA |

AZOL GAS

# CK 4000 V1 MOUNTS

*Low Profile*

## D02-095

ISO E24.54.815.G EM24.54.700/F

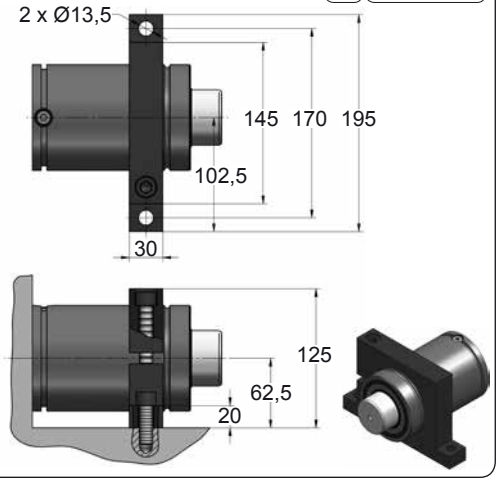


## D67-095

VDI

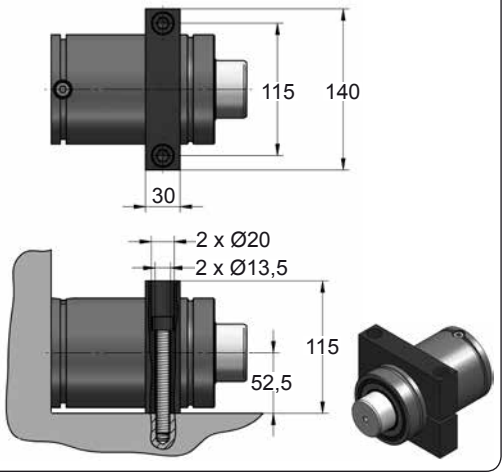









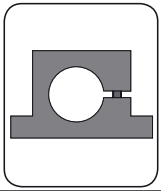

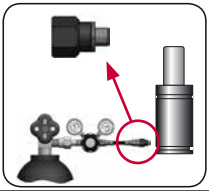

| CODE | | CK 4000 050 V1 | KIT XXXXXXX-S<br>KIT XXXXXXX-C | D02-095 | 18 GA 5 |
|---|---|---|---|---|---|
| ENG | ORDER | GAS SPRING | REPAIR KIT | FLANGE | CHARGING ADAPTER |
| DEU | BESTELLUNG | GASDRUCKFEDER | ERSATZTEILSATZ | FLANSCHE | LADEADAPTER |
| FRA | COMMANDE | RESSORT À GAZ | KIT DE RÉPARATION | BRIDE | RACCORD DE CHARGE |
| ITA | ORDINE | CILINDRO AD AZOTO | KIT DI MANUTENZIONE | FLANGE | ADATTATORE DI CARICO |
| ESP | PEDIDO | RESORTE DE GAS | KIT DE REPARACION | BRIDA | ADAPTADOR DE CARGA |
| POR | PEDIDO | CILINDRO DE GÁS | KIT DE MANUTENÇÃO | FLANGE | ADAPTADOR DE CARGA |

AZOL GAS

# CT LOW PROFILE SMALL

| MODEL | $F_0$ | Ø | S | L1 | Pmax | Charge Port | | |
|---|---|---|---|---|---|---|---|---|
| CT 200 V1 | 200 | Ø25 | 7 - 80 | 47 - 193 | 180 | M6 | ✗ | ✗ |
| CT 300 V1 | 300 | Ø32 | 5 - 100 | 47 - 237 | 150 | M6 | ✗ | ✗ |
| CT 550 V1 | 550 | Ø38 | 12 - 125 | 56 - 282 | 150 | M6 | ✓ | ✓ |
| CT 750 | 750 | Ø50 | 12 - 125 | 62 - 288 | 160 | M6 | ✓ | ✓ |
| CTN 750 | 750 | Ø50 | 10 - 125 | 68 - 298 | 160 | G1/8" | ✓ | ✓ |
| CT 1000 | 1000 | Ø50 | 5 - 125 | 48 - 288 | 160 | M6 | ✓ | ✓ |
| CTN 1000 | 1000 | Ø50 | 10 - 125 | 68 - 298 | 160 | G1/8" | ✓ | ✓ |
| CT 1500 | 1500 | Ø63 | 12 - 125 | 76 - 302 | 150 | M6 | ✓ | ✓ |
| CTN 1500 | 1500 | Ø63 | 12 - 125 | 86 - 312 | 150 | G1/8" | ✓ | ✓ |
| CT 2500 | 2500 | Ø75 | 12 - 200 | 78 - 454 | 150 | M6 | ✓ | ✓ |
| CTN 2500 | 2500 | Ø75 | 12 - 200 | 88 - 464 | 150 | G1/8" | ✓ | ✓ |
| CT 3000 | 3000 | Ø75 | 12 - 200 | 78 - 454 | 150 | M6 | ✓ | ✓ |
| CTN 3000 | 3000 | Ø75 | 12 - 200 | 88 - 464 | 150 | G1/8" | ✓ | ✓ |
| CT 5000 | 5000 | Ø105 | 12 - 200 | 84 - 460 | 150 | M6 | ✓ | ✓ |
| CTN 5000 | 5000 | Ø105 | 12 - 200 | 94 - 470 | 150 | G1/8" | ✓ | ✓ |

| S mm | Ø mm | L1 mm | | | | | | | |
|---|---|---|---|---|---|---|---|---|---|
| | | | 50 Ø50 L1=131 L1=138 L1=152 | 50 Ø50 L1=138 | 50 Ø50 L1=138 L1=150 L1=150 | 50 Ø50 L1=170 L1=185 L1=195 | 50 Ø50 L1=195 | 50 Ø50 L1=165 L1=190 | 50 Ø50 L1=220 |
| $F_0$ daN | | | 1000 1000 1000 | 1000 | 1000 1000 750 | 750 1000 1000 | 750 | 1700 2000 | 1800 |
| MODEL | ✗ | | CR 1000 CW 1000 KZ 1000 | AS 1000 | CT 1000 CK 1000 FD 750 | GN 750 CM 1000 CD 1000 | AG 750 | CPH 1700 CP 2000 | CS 1800 |
| SERIES | MINI | | COMPACT HEIGHT | THREADED | LOW PROFILE | HEAVY DUTY | ISO | HEAVY LOAD | POWER COMPACT STROKE |

# CT 200 V1

*Low Profile*

AZOL GAS

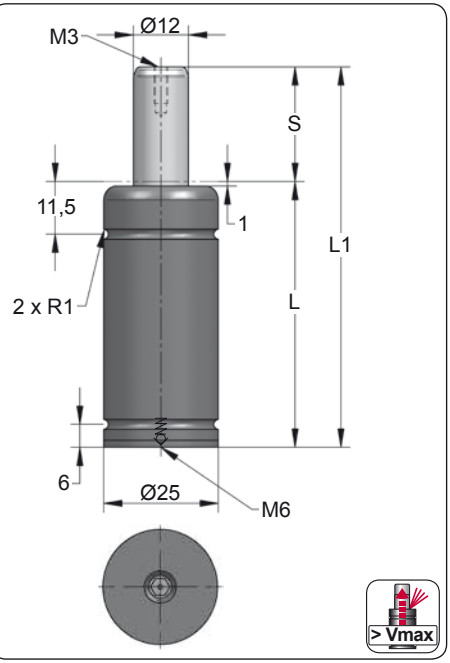


| CODE | S (mm) | L1 ±0,25 (mm) | L (mm) | Kg. |
|---|---|---|---|---|
| CT 200 007 V1 | 7 | 47 | 40 | 0.11 |
| CT 200 012 V1 | 12.7 | 58.4 | 45.7 | 0.13 |
| CT 200 016 V1 | 16 | 65 | 49 | 0.13 |
| CT 200 025 V1 | 25 | 83 | 58 | 0.15 |
| CT 200 038 V1 | 38 | 109 | 71 | 0.18 |
| CT 200 050 V1 | 50 | 133 | 83 | 0.20 |
| CT 200 063 V1 | 63.5 | 160 | 96.5 | 0.23 |
| CT 200 080 V1 | 80 | 193 | 113 | 0.25 |

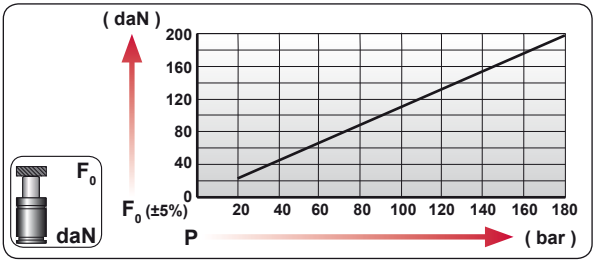


| CODE | bar | psi | $F_0$ daN | $F_1$ daN |
|---|---|---|---|---|
| CT 200 050 V1 | 180 | 2610 | 200 | 295 |
| --------- | --- | --- | --- | --- |

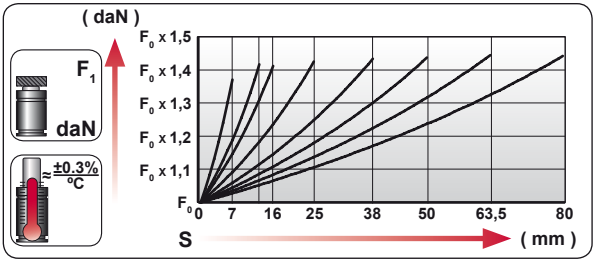


| | |
|---|---|
| ENG | ORDER |
| DEU | BESTELLUNG |
| FRA | COMMANDE |
| ITA | ORDINE |
| ESP | PEDIDO |
| POR | PEDIDO |




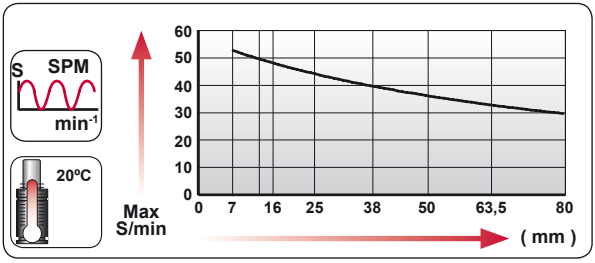


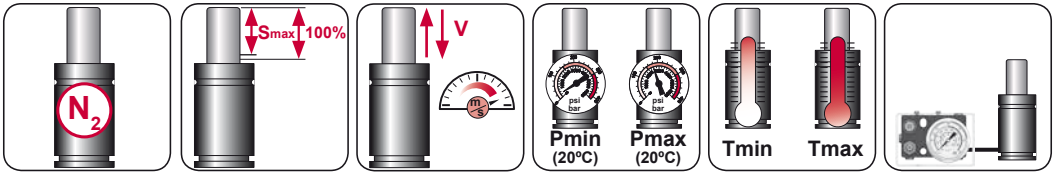


| $N_2$ | Smax < 90% | Vmax 1,6 m/s | bar psi 20 290 | bar psi 180 2610 | ºC ºF 0 32 | ºC ºF 80 176 | |
|---|---|---|---|---|---|---|---|

AZOL GAS

# CT 200 V1 MOUNTS

*Low Profile*

## A44-025

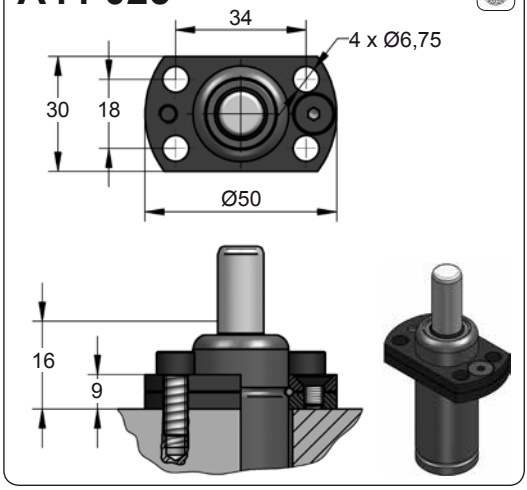


## A49-025

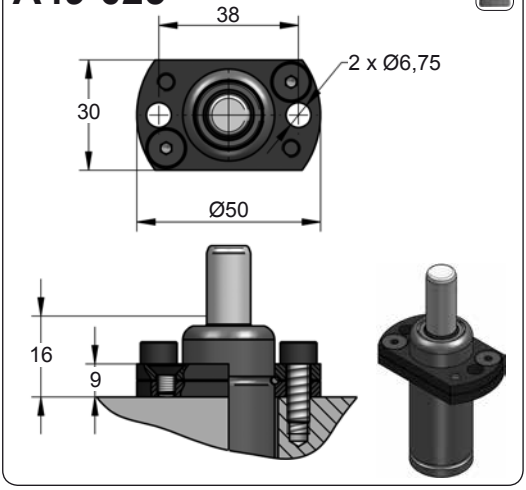


## D02-025

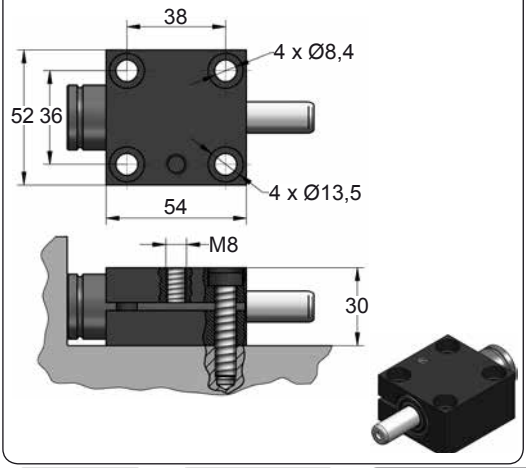









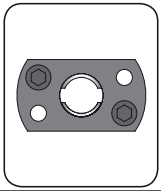

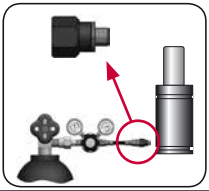

| CODE | | CT 200 050 V1 | | A44-025 | 06 GA 11 |
|---|---|---|---|---|---|
| ENG | ORDER | GAS SPRING | REPAIR KIT | FLANGE | CHARGING ADAPTER |
| DEU | BESTELLUNG | GASDRUCKFEDER | ERSATZTEILSATZ | FLANSCHE | LADEADAPTER |
| FRA | COMMANDE | RESSORT À GAZ | KIT DE RÉPARATION | BRIDE | RACCORD DE CHARGE |
| ITA | ORDINE | CILINDRO AD AZOTO | KIT DI MANUTENZIONE | FLANGE | ADATTATORE DI CARICO |
| ESP | PEDIDO | RESORTE DE GAS | KIT DE REPARACION | BRIDA | ADAPTADOR DE CARGA |
| POR | PEDIDO | CILINDRO DE GÁS | KIT DE MANUTENÇÃO | FLANGE | ADAPTADOR DE CARGA |

# CT 300 V1

*Low Profile*

AZOL GAS

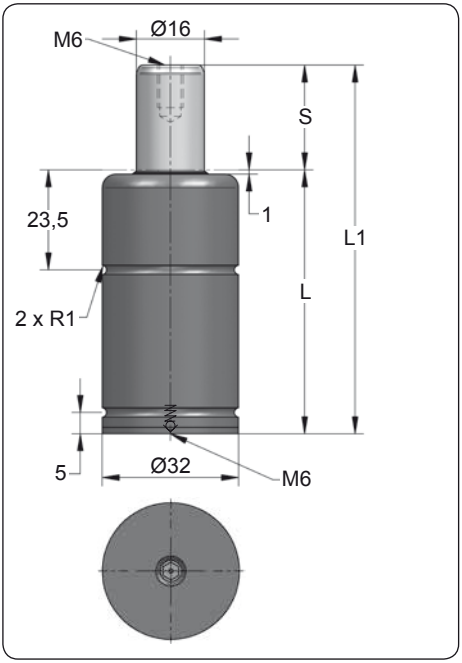


| ORDER | S (mm) | L1 ±0,25 (mm) | L (mm) | Kg. |
|---|---|---|---|---|
| CT 300 005 V1 | 5 | 47 | 42 | 0.21 |
| CT 300 007 V1 | 7 | 51 | 44 | 0.22 |
| CT 300 010 V1 | 10 | 57 | 47 | 0.23 |
| CT 300 012 V1 | 12 | 61 | 49 | 0.24 |
| CT 300 016 V1 | 16 | 69 | 53 | 0.25 |
| CT 300 025 V1 | 25 | 87 | 62 | 0.28 |
| CT 300 038 V1 | 38 | 113 | 75 | 0.35 |
| CT 300 050 V1 | 50 | 137 | 87 | 0.37 |
| CT 300 063 V1 | 63 | 163 | 100 | 0.43 |
| CT 300 080 V1 | 80 | 197 | 117 | 0.49 |
| CT 300 100 V1 | 100 | 237 | 137 | 0.57 |

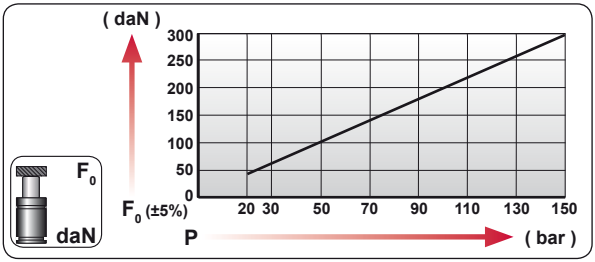


| CODE | bar | psi | $F_0$ daN | $F_1$ daN |
|---|---|---|---|---|
| CT 300 050 V1 | 150 | 2175 | 300 | 495 |
| --------- | --- | --- | --- | --- |

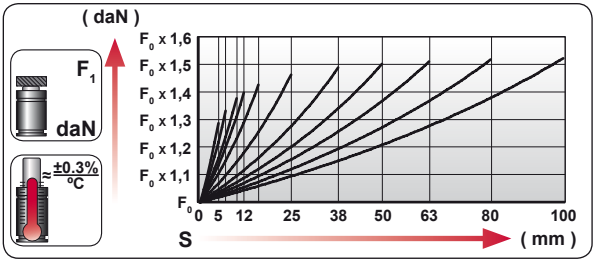


| | |
|---|---|
| ENG | ORDER |
| DEU | BESTELLUNG |
| FRA | COMMANDE |
| ITA | ORDINE |
| ESP | PEDIDO |
| POR | PEDIDO |

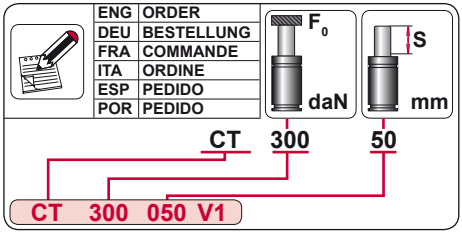


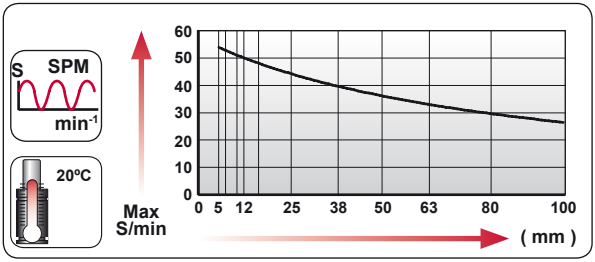


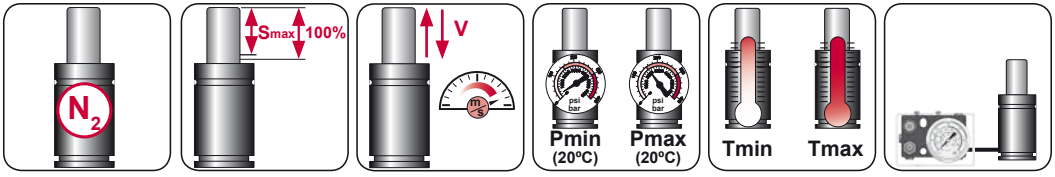


| $N_2$ | Smax < 90% | Vmax 1,6 m/s | bar psi 20 290 | bar psi 150 2175 | ºC ºF 0 32 | ºC ºF 80 176 | |
|---|---|---|---|---|---|---|---|

AZOL GAS

# CT 300 V1 MOUNTS

*Low Profile*

## A14-032

ISO E24.54.815.G EM24.54.700/F

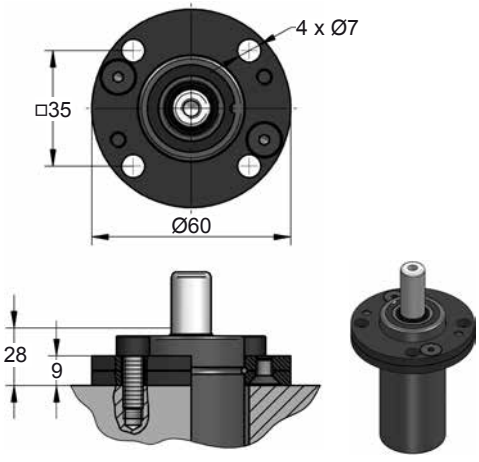


## A34-032

VDI

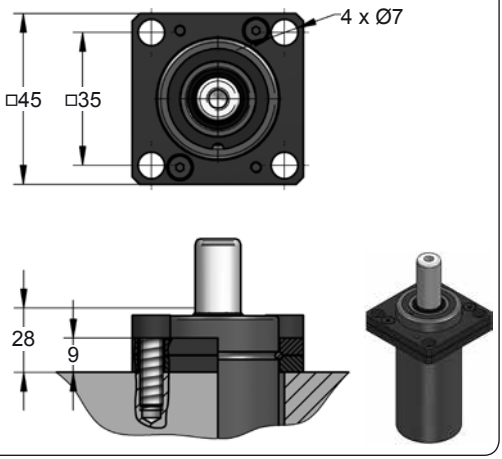


## D02-032

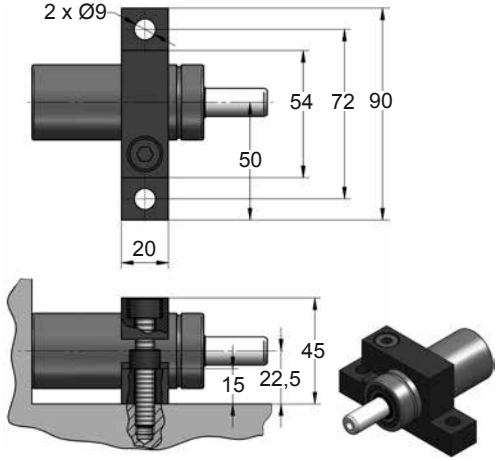


## D67-032

VDI

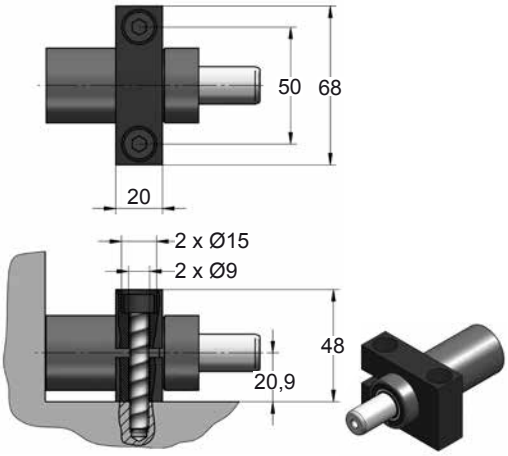









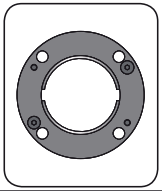

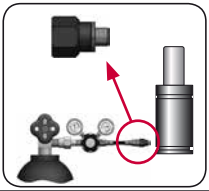

| CODE | | CT 300 050 V1 | | A14-032 | 06 GA 11 |
|---|---|---|---|---|---|
| ENG | ORDER | GAS SPRING | REPAIR KIT | FLANGE | CHARGING ADAPTER |
| DEU | BESTELLUNG | GASDRUCKFEDER | ERSATZTEILSATZ | FLANSCHE | LADEADAPTER |
| FRA | COMMANDE | RESSORT À GAZ | KIT DE RÉPARATION | BRIDE | RACCORD DE CHARGE |
| ITA | ORDINE | CILINDRO AD AZOTO | KIT DI MANUTENZIONE | FLANGE | ADATTATORE DI CARICO |
| ESP | PEDIDO | RESORTE DE GAS | KIT DE REPARACION | BRIDA | ADAPTADOR DE CARGA |
| POR | PEDIDO | CILINDRO DE GÁS | KIT DE MANUTENÇÃO | FLANGE | ADAPTADOR DE CARGA |

# CT 550

*Low Profile*

AZOL GAS

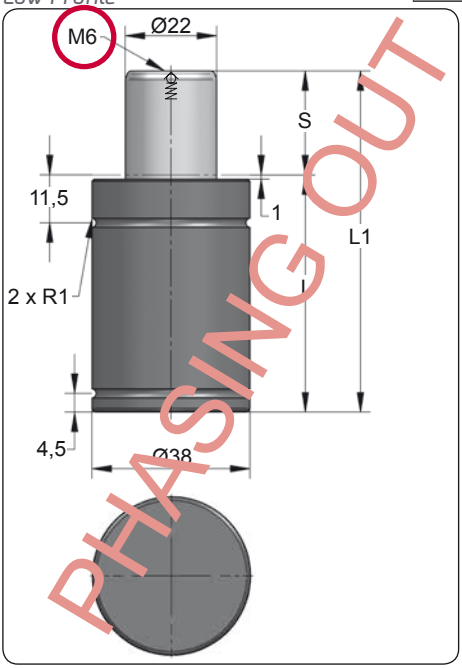


| ORDER | S (mm) | L1 ±0,25 (mm) | L (mm) | Kg. |
|---|---|---|---|---|
| CT 550 012 | 12 | 56 | 44 | 0.30 |
| CT 550 025 | 25 | 82 | 57 | 0.37 |
| CT 550 038 | 38 | 108 | 70 | 0.42 |
| CT 550 050 | 50 | 132 | 82 | 0.50 |
| CT 550 063 | 63 | 158 | 95 | 0.53 |
| CT 550 080 | 80 | 192 | 112 | 0.61 |
| CT 550 100 | 100 | 232 | 132 | 0.70 |
| CT 550 125 | 125 | 282 | 157 | 0.83 |

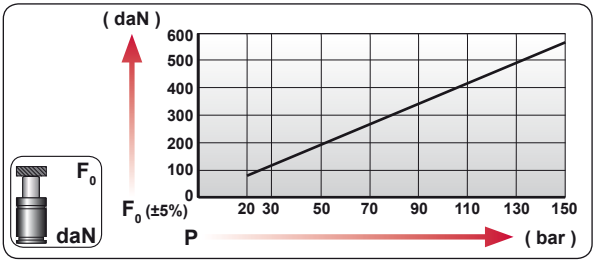


| CODE | bar | psi | F0 daN | F1 daN |
|---|---|---|---|---|
| CT 550 050 | 145 | 2105 | 550 | 955 |
| --------- | --- | --- | --- | --- |

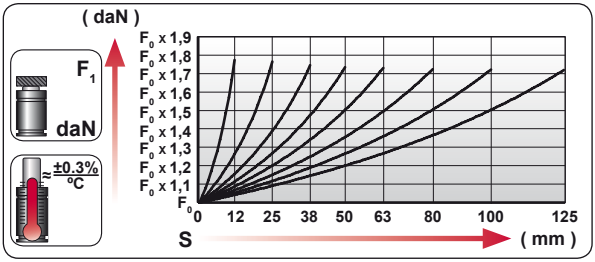


| | |
|---|---|
| ENG | ORDER |
| DEU | BESTELLUNG |
| FRA | COMMANDE |
| ITA | ORDINE |
| ESP | PEDIDO |
| POR | PEDIDO |

F0 daN — S mm

CT 550 50

CT 550 050

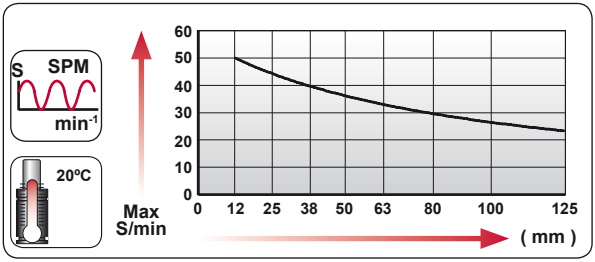


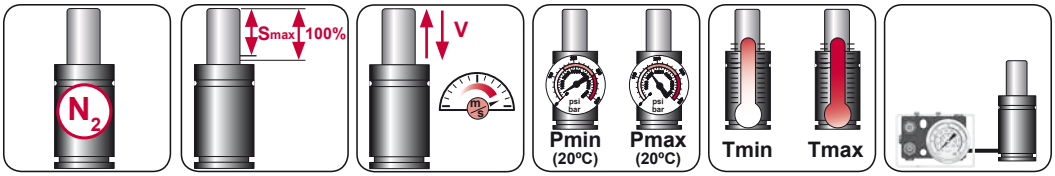


| $N_2$ | Smax < 90% | Vmax 1,6 m/s | bar psi 20 290 | bar psi 150 2175 | °C °F 0 32 | °C °F 80 176 | |
|---|---|---|---|---|---|---|---|

AZOL GAS

# CT 550 MOUNTS

*Low Profile*

## A14-038

ISO · E24.54.815.G · EM24.54.700/F

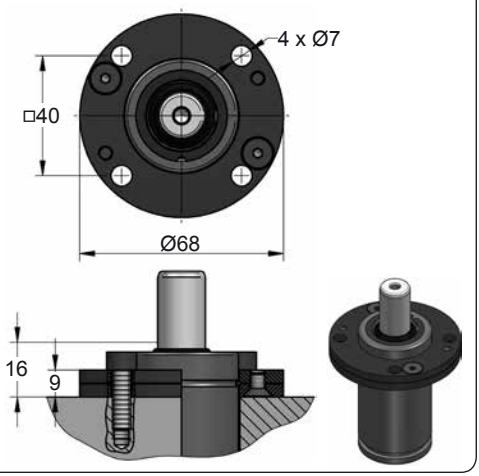


## A34-038

ISO · VDI

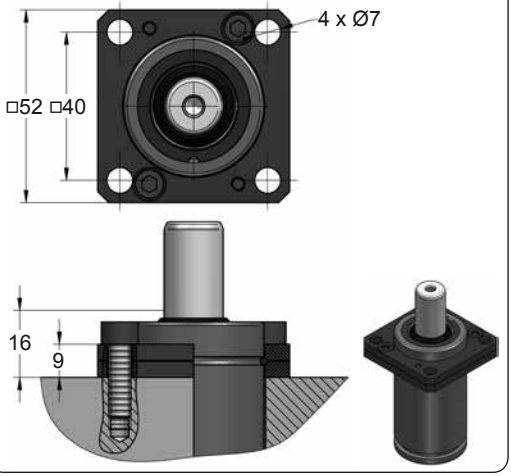


## D02-038

E24.54.815.G

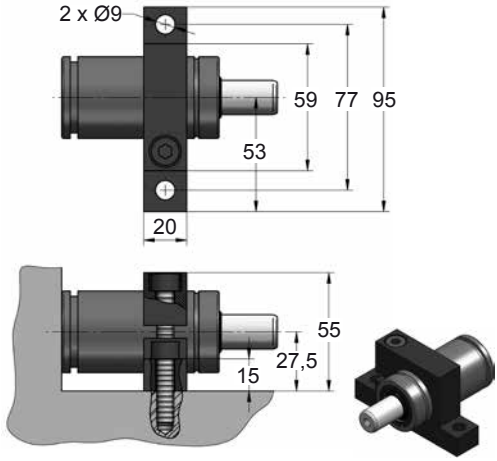


## D67-038

VDI

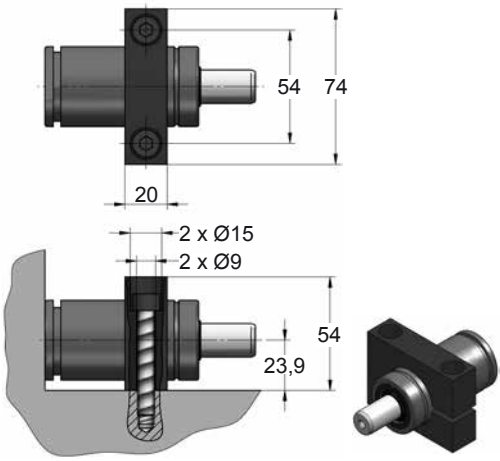









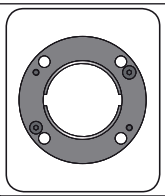

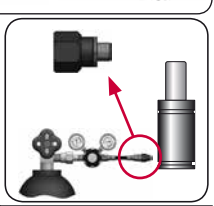

| CODE | | CT 550 050 | KIT XXXXXXX-S<br>KIT XXXXXXX-C | A14-038 | 06 GA 10 |
|---|---|---|---|---|---|
| ENG | ORDER | GAS SPRING | REPAIR KIT | FLANGE | CHARGING ADAPTER |
| DEU | BESTELLUNG | GASDRUCKFEDER | ERSATZTEILSATZ | FLANSCHE | LADEADAPTER |
| FRA | COMMANDE | RESSORT À GAZ | KIT DE RÉPARATION | BRIDE | RACCORD DE CHARGE |
| ITA | ORDINE | CILINDRO AD AZOTO | KIT DI MANUTENZIONE | FLANGE | ADATTATORE DI CARICO |
| ESP | PEDIDO | RESORTE DE GAS | KIT DE REPARACION | BRIDA | ADAPTADOR DE CARGA |
| POR | PEDIDO | CILINDRO DE GÁS | KIT DE MANUTENÇÃO | FLANGE | ADAPTADOR DE CARGA |

# CT 550 V1

*Low Profile*

AZOL GAS

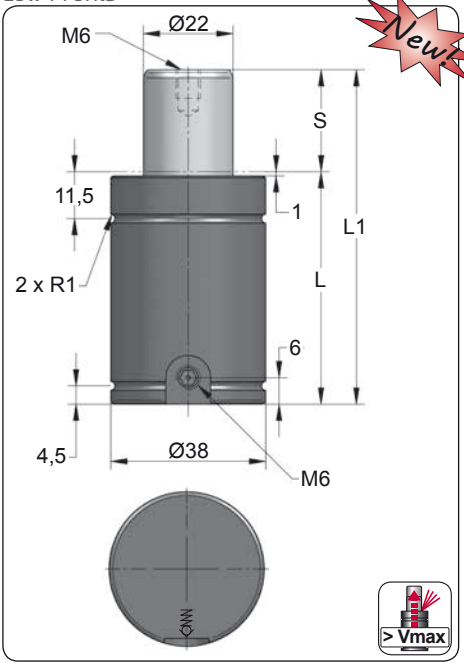


Newt

| ORDER | S (mm) | L1 ±0,25 (mm) | L (mm) | Kg. |
|---|---|---|---|---|
| CT 550 012 V1 | 12 | 56 | 44 | 0.30 |
| CT 550 025 V1 | 25 | 82 | 57 | 0.35 |
| CT 550 038 V1 | 38 | 108 | 70 | 0.41 |
| CT 550 050 V1 | 50 | 132 | 82 | 0.46 |
| CT 550 063 V1 | 63 | 158 | 95 | 0.52 |
| CT 550 080 V1 | 80 | 192 | 112 | 0.60 |
| CT 550 100 V1 | 100 | 232 | 132 | 0.69 |
| CT 550 125 V1 | 125 | 282 | 157 | 0.80 |

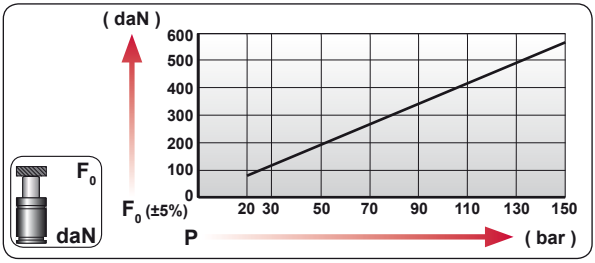


| CODE | bar | psi | $F_0$ daN | $F_1$ daN |
|---|---|---|---|---|
| CT 550 050 V1 | 145 | 2105 | 550 | 955 |
| CT-H 550 050 V1 | 0 | 0 | --- | --- |

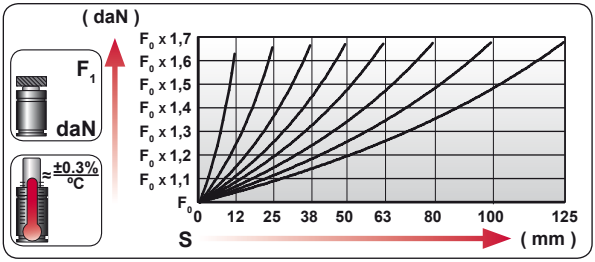


| | |
|---|---|
| ENG | ORDER |
| DEU | BESTELLUNG |
| FRA | COMMANDE |
| ITA | ORDINE |
| ESP | PEDIDO |
| POR | PEDIDO |

$F_0$ daN — S mm

CT 550 50

CT 550 050 V1

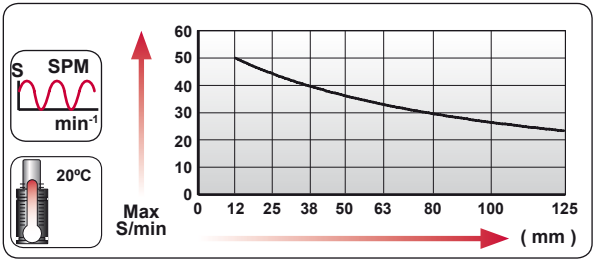


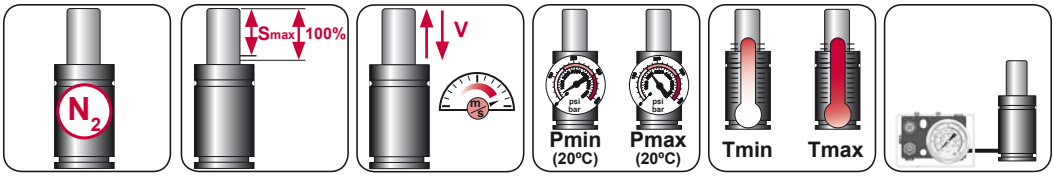


| $N_2$ | Smax < 90% | Vmax 1,6 m/s | bar psi 20 290 | bar psi 150 2175 | °C °F 0 32 | °C °F 80 176 | 600 CP- |
|---|---|---|---|---|---|---|---|

AZOL GAS

# CT 550 V1 MOUNTS

*Low Profile*

## A14-038

ISO · E24.54.815.G · EM24.54.700/F

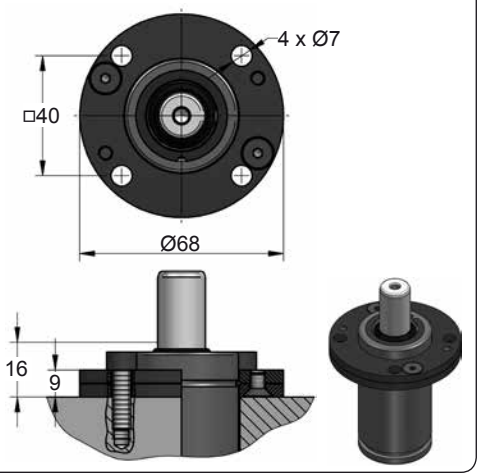


## A34-038

ISO · VDI

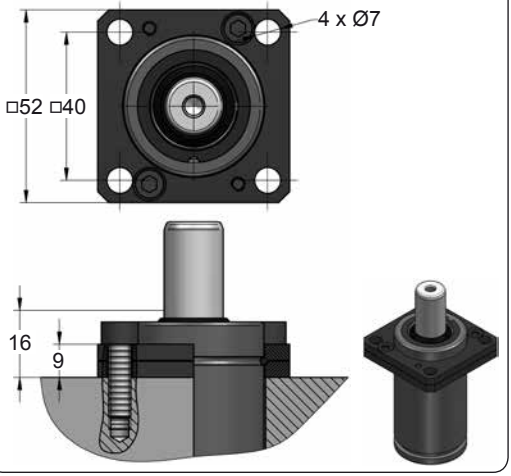


## D02-038

E24.54.815.G

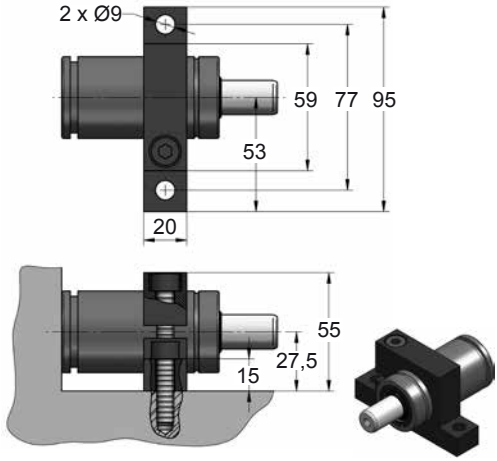


## D67-038

VDI

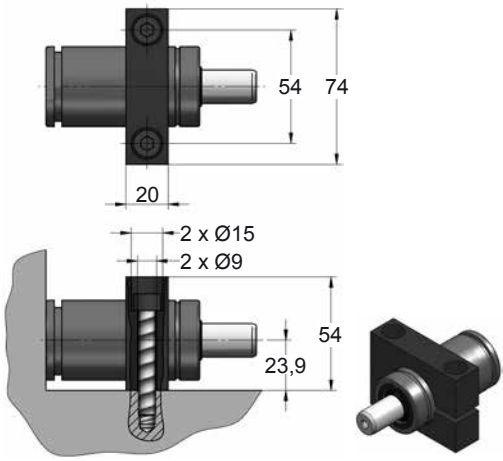









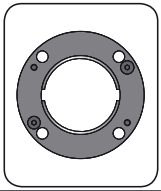

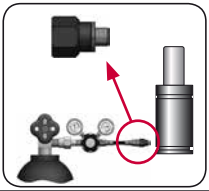

| CODE | | CT 550 050 V1 | KIT XXXXXXX-S<br>KIT XXXXXXX-C | A14-038 | 06 GA 11 |
|---|---|---|---|---|---|
| ENG | ORDER | GAS SPRING | REPAIR KIT | FLANGE | CHARGING ADAPTER |
| DEU | BESTELLUNG | GASDRUCKFEDER | ERSATZTEILSATZ | FLANSCHE | LADEADAPTER |
| FRA | COMMANDE | RESSORT À GAZ | KIT DE RÉPARATION | BRIDE | RACCORD DE CHARGE |
| ITA | ORDINE | CILINDRO AD AZOTO | KIT DI MANUTENZIONE | FLANGE | ADATTATORE DI CARICO |
| ESP | PEDIDO | RESORTE DE GAS | KIT DE REPARACION | BRIDA | ADAPTADOR DE CARGA |
| POR | PEDIDO | CILINDRO DE GÁS | KIT DE MANUTENÇÃO | FLANGE | ADAPTADOR DE CARGA |

# CT 750

*Low Profile*

AZOL GAS

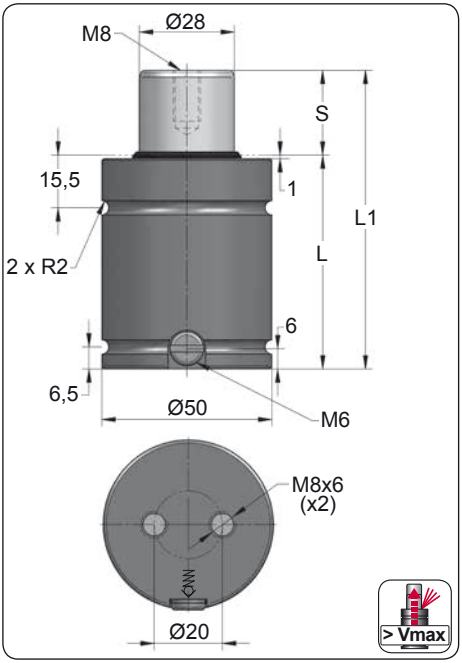


| ORDER | S (mm) | L1 ±0,25 (mm) | L (mm) | Kg. |
|---|---|---|---|---|
| CT 750 012 | 12 | 62 | 50 | 0.60 |
| CT 750 019 | 19 | 76 | 57 | 0.67 |
| CT 750 025 | 25 | 88 | 63 | 0.73 |
| CT 750 032 | 32 | 102 | 70 | 0.79 |
| CT 750 038 | 38 | 114 | 76 | 0.85 |
| CT 750 050 | 50 | 138 | 88 | 0.96 |
| CT 750 063 | 63 | 164 | 101 | 1.09 |
| CT 750 075 | 75 | 188 | 113 | 1.20 |
| CT 750 080 | 80 | 198 | 118 | 1.25 |
| CT 750 100 | 100 | 238 | 138 | 1.44 |
| CT 750 125 | 125 | 288 | 163 | 1.67 |

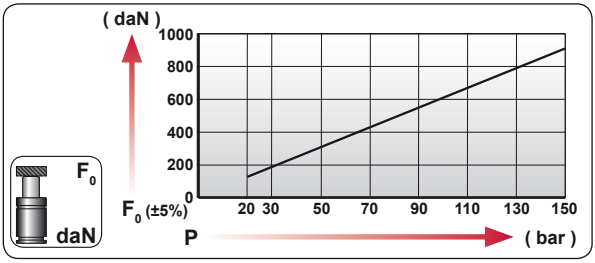


| CODE | bar | psi | $F_0$ daN | $F_1$ daN |
|---|---|---|---|---|
| CT 750 050 | 120 | 1740 | 740 | 1325 |
| CT-H 750 050 | 0 | 0 | --- | --- |

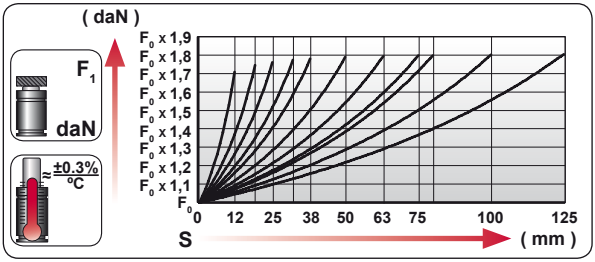


| | |
|---|---|
| ENG | ORDER |
| DEU | BESTELLUNG |
| FRA | COMMANDE |
| ITA | ORDINE |
| ESP | PEDIDO |
| POR | PEDIDO |




CT 750 50

CT 750 050

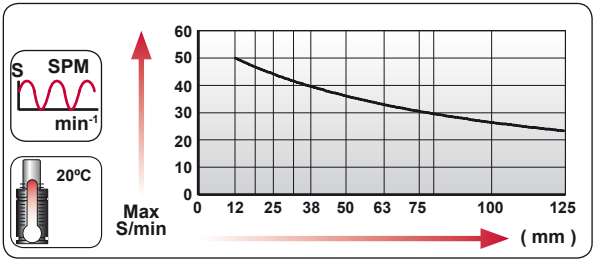


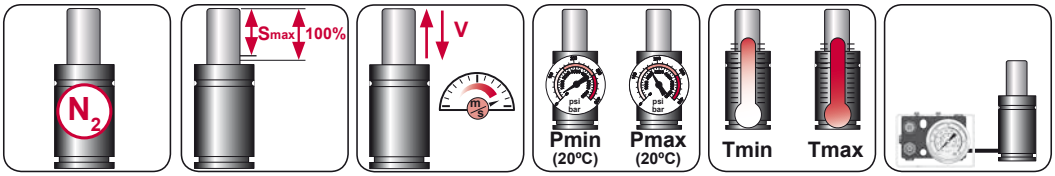


| $N_2$ | Smax < 90% | Vmax 1,6 m/s | bar psi 20 290 | bar psi 160 2320 | ºC ºF 0 32 | ºC ºF 80 176 | 600 CP- |
|---|---|---|---|---|---|---|---|

AZOL GAS

# CT 750

*Low Profile*

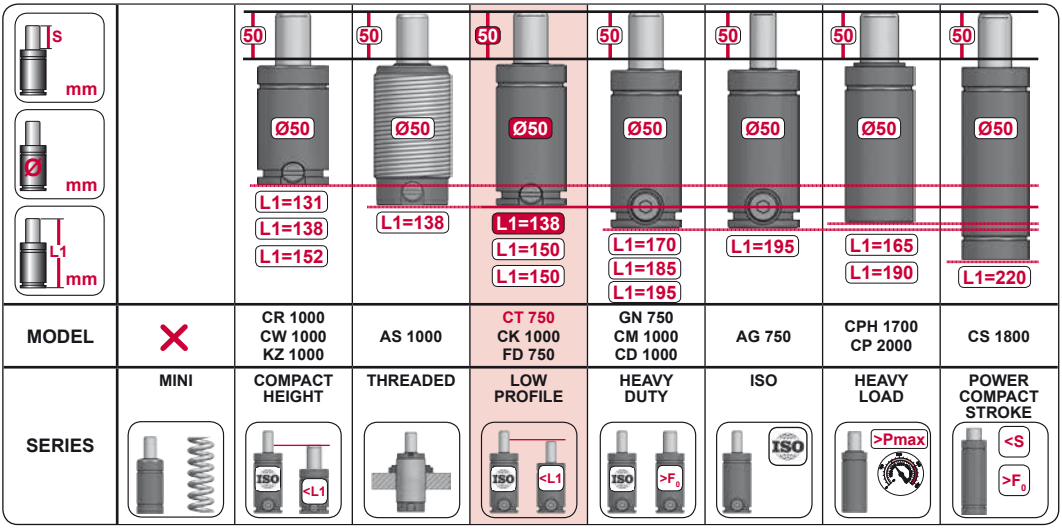


| MODEL | | CR 1000 CW 1000 KZ 1000 | AS 1000 | CT 750 CK 1000 FD 750 | GN 750 CM 1000 CD 1000 | AG 750 | CPH 1700 CP 2000 | CS 1800 |
|---|---|---|---|---|---|---|---|---|
| SERIES | MINI | COMPACT HEIGHT | THREADED | LOW PROFILE | HEAVY DUTY | ISO | HEAVY LOAD | POWER COMPACT STROKE |

## CT

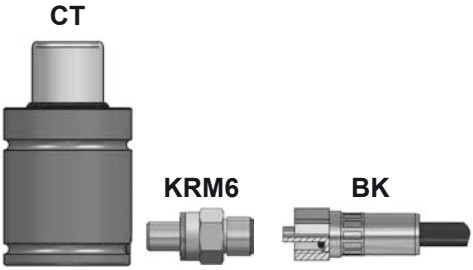


## CTN

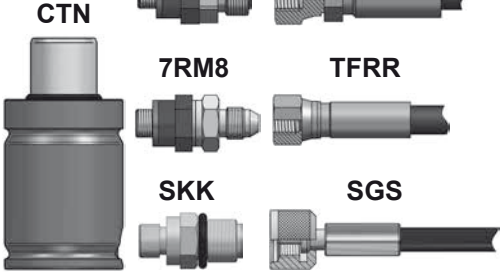





| CODE | | CT 750 050 | KIT XXXXXXX-S KIT XXXXXXX-C | A14-050 | 06 GA 11 |
|---|---|---|---|---|---|
| ENG | ORDER | GAS SPRING | REPAIR KIT | FLANGE | CHARGING ADAPTER |
| DEU | BESTELLUNG | GASDRUCKFEDER | ERSATZTEILSATZ | FLANSCHE | LADEADAPTER |
| FRA | COMMANDE | RESSORT À GAZ | KIT DE RÉPARATION | BRIDE | RACCORD DE CHARGE |
| ITA | ORDINE | CILINDRO AD AZOTO | KIT DI MANUTENZIONE | FLANGE | ADATTATORE DI CARICO |
| ESP | PEDIDO | RESORTE DE GAS | KIT DE REPARACION | BRIDA | ADAPTADOR DE CARGA |
| POR | PEDIDO | CILINDRO DE GÁS | KIT DE MANUTENÇÃO | FLANGE | ADAPTADOR DE CARGA |

# CTC 750

*Low Profile*

AZOL GAS

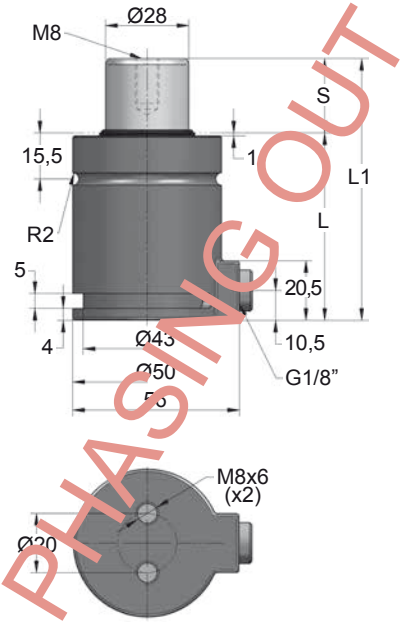


PHASING OUT

| ORDER | S (mm) | L1 ±0,25 (mm) | L (mm) | Kg. |
|---|---|---|---|---|
| CTC 750 012 | 12 | 62 | 50 | 0.62 |
| CTC 750 019 | 19 | 76 | 57 | 0.69 |
| CTC 750 025 | 25 | 88 | 63 | 0.74 |
| CTC 750 032 | 32 | 102 | 70 | 0.81 |
| CTC 750 038 | 38 | 114 | 76 | 0.87 |
| CTC 750 050 | 50 | 138 | 88 | 0.98 |
| CTC 750 063 | 63 | 164 | 101 | 1.10 |
| CTC 750 075 | 75 | 188 | 113 | 1.22 |
| CTC 750 080 | 80 | 198 | 118 | 1.26 |
| CTC 750 100 | 100 | 238 | 138 | 1.45 |
| CTC 750 125 | 125 | 288 | 163 | 1.69 |

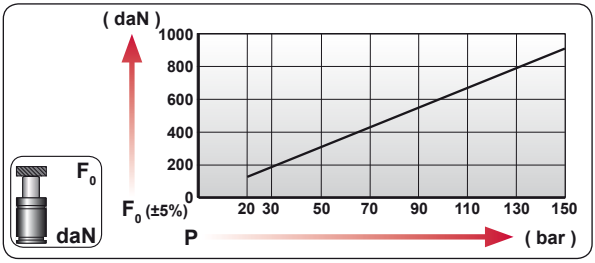


| CODE | bar | psi | F0 daN | F1 daN |
|---|---|---|---|---|
| --------- | --- | --- | --- | --- |
| CTC 750 050 | 0 | 0 | --- | --- |

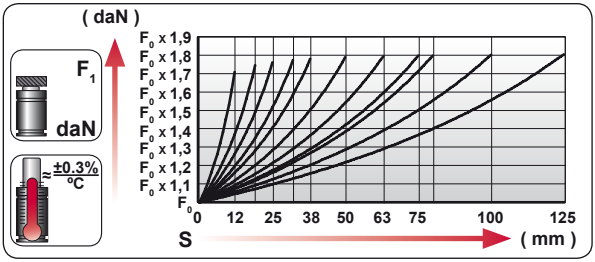


| | |
|---|---|
| ENG | ORDER |
| DEU | BESTELLUNG |
| FRA | COMMANDE |
| ITA | ORDINE |
| ESP | PEDIDO |
| POR | PEDIDO |




CTC 750 50

CTC 750 050

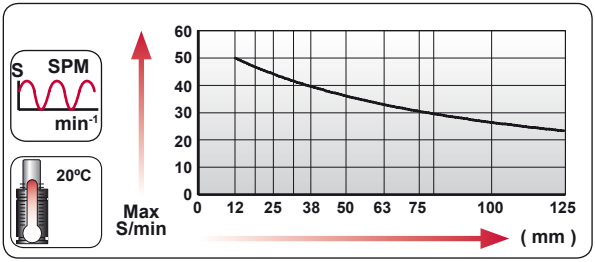


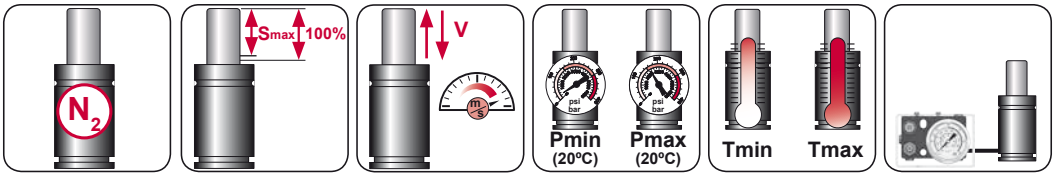


| $N_2$ | Smax < 90% | Vmax 1,6 m/s | bar psi 20 290 | bar psi 160 2320 | °C °F 0 32 | °C °F 80 176 | 600 CP- |
|---|---|---|---|---|---|---|---|

AZOL GAS

# CTC 750 MOUNTS

*Low Profile*

## C55-050

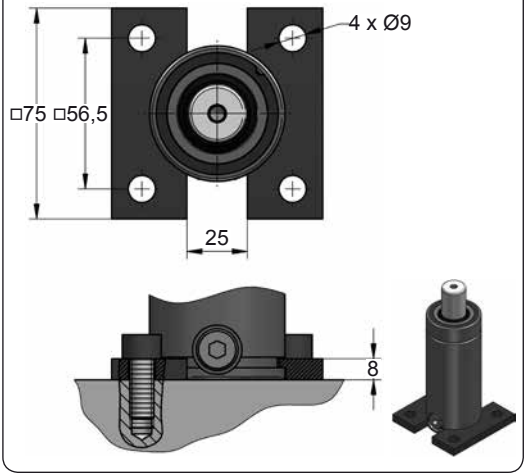




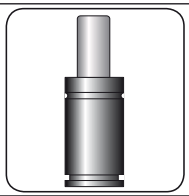




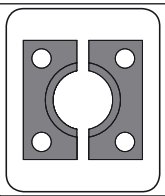

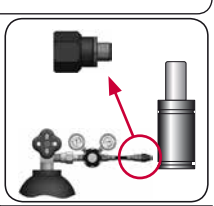

| CODE | | CTC 750 050 | KIT XXXXXXX-S<br>KIT XXXXXXX-C | C55-050 | SKK 12R 1/8 |
|---|---|---|---|---|---|
| ENG | ORDER | GAS SPRING | REPAIR KIT | FLANGE | CHARGING ADAPTER |
| DEU | BESTELLUNG | GASDRUCKFEDER | ERSATZTEILSATZ | FLANSCHE | LADEADAPTER |
| FRA | COMMANDE | RESSORT À GAZ | KIT DE RÉPARATION | BRIDE | RACCORD DE CHARGE |
| ITA | ORDINE | CILINDRO AD AZOTO | KIT DI MANUTENZIONE | FLANGE | ADATTATORE DI CARICO |
| ESP | PEDIDO | RESORTE DE GAS | KIT DE REPARACION | BRIDA | ADAPTADOR DE CARGA |
| POR | PEDIDO | CILINDRO DE GÁS | KIT DE MANUTENÇÃO | FLANGE | ADAPTADOR DE CARGA |

# CTN 750

*Low Profile*

AZOL GAS

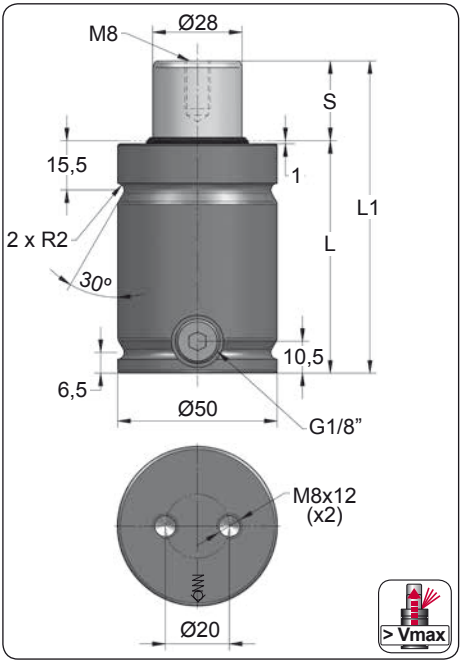


| ORDER | S (mm) | L1 ±0,25 (mm) | L (mm) | Kg. |
|---|---|---|---|---|
| CTN 750 010 | 10 | 68 | 58 | 0.72 |
| CTN 750 012 | 12 | 72 | 60 | 0.74 |
| CTN 750 019 | 19 | 86 | 67 | 0.81 |
| CTN 750 025 | 25 | 98 | 73 | 0.87 |
| CTN 750 032 | 32 | 112 | 80 | 0.93 |
| CTN 750 038 | 38 | 124 | 86 | 0.99 |
| CTN 750 050 | 50 | 148 | 98 | 1.10 |
| CTN 750 063 | 63 | 174 | 111 | 1.23 |
| CTN 750 075 | 75 | 198 | 123 | 1.32 |
| CTN 750 080 | 80 | 208 | 128 | 1.39 |
| CTN 750 100 | 100 | 248 | 148 | 1.58 |
| CTN 750 125 | 125 | 298 | 173 | 1.81 |

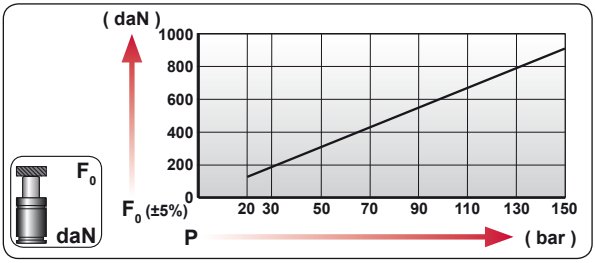


| CODE | bar | psi | $F_0$ daN | $F_1$ daN |
|---|---|---|---|---|
| CTN 750 050 | 120 | 1740 | 740 | 1315 |
| CTN-H 750 050 | 0 | 0 | --- | --- |

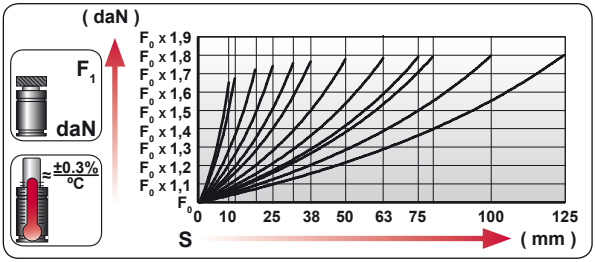


| | |
|---|---|
| ENG | ORDER |
| DEU | BESTELLUNG |
| FRA | COMMANDE |
| ITA | ORDINE |
| ESP | PEDIDO |
| POR | PEDIDO |




CTN 750 50

CTN 750 050

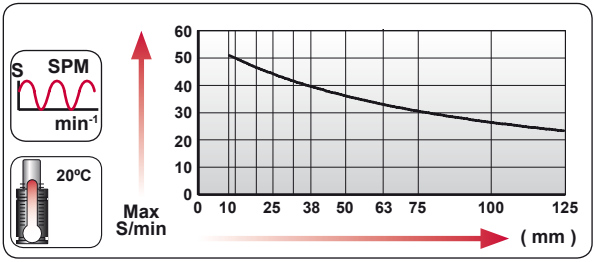


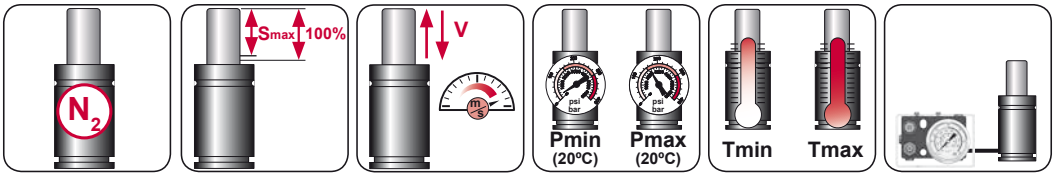


| $N_2$ | Smax < 90% | Vmax 1,6 m/s | bar psi 20 290 | bar psi 160 2320 | ºC ºF 0 32 | ºC ºF 80 176 | 600 CP- |
|---|---|---|---|---|---|---|---|

AZOL GAS

# CTN 750

*Low Profile*




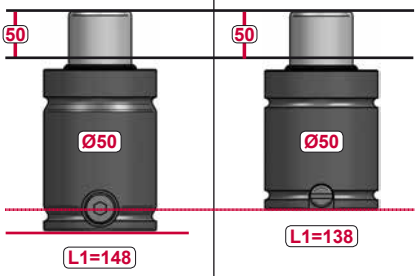


| MODEL | CTN 750 | CT 750 |
|---|---|---|

## CT

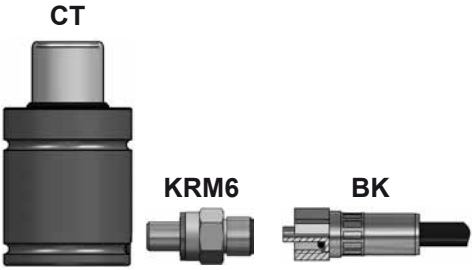


## CTN

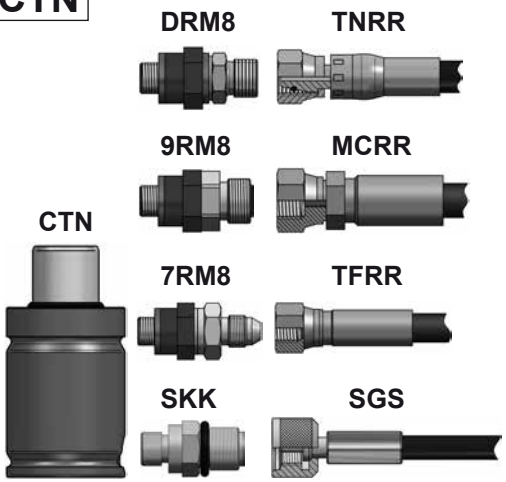









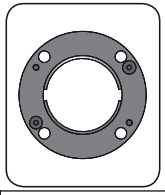

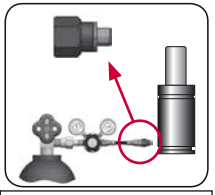

| CODE | | CTN 750 050 | KIT XXXXXXX-S<br>KIT XXXXXXX-C | A14-050 | 18 GA 5 |
|---|---|---|---|---|---|
| ENG | ORDER | GAS SPRING | REPAIR KIT | FLANGE | CHARGING ADAPTER |
| DEU | BESTELLUNG | GASDRUCKFEDER | ERSATZTEILSATZ | FLANSCHE | LADEADAPTER |
| FRA | COMMANDE | RESSORT À GAZ | KIT DE RÉPARATION | BRIDE | RACCORD DE CHARGE |
| ITA | ORDINE | CILINDRO AD AZOTO | KIT DI MANUTENZIONE | FLANGE | ADATTATORE DI CARICO |
| ESP | PEDIDO | RESORTE DE GAS | KIT DE REPARACION | BRIDA | ADAPTADOR DE CARGA |
| POR | PEDIDO | CILINDRO DE GÁS | KIT DE MANUTENÇÃO | FLANGE | ADAPTADOR DE CARGA |

# CT 750 MOUNTS

*Low Profile*

AZOL GAS

## A14-050

ISO | E24.54.815.G | EM24.54.700/F

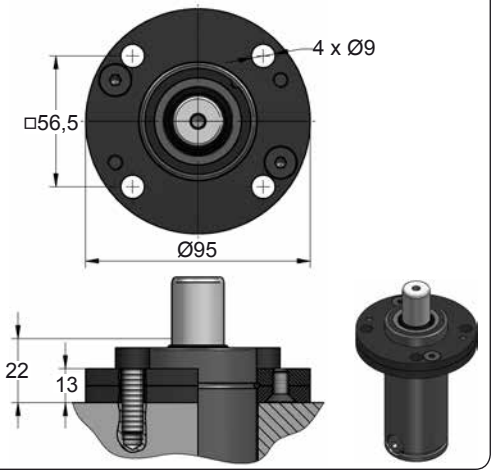


## A34-050

ISO | VDI

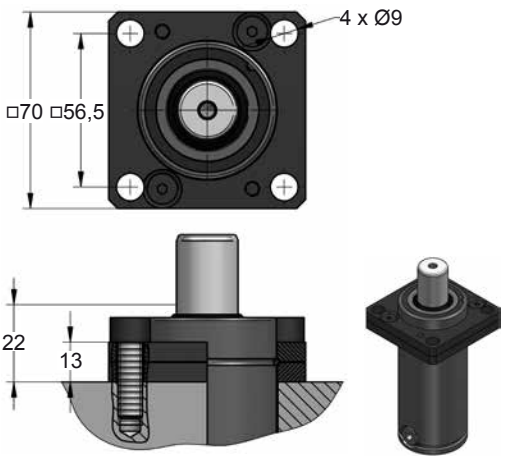


## B36-050

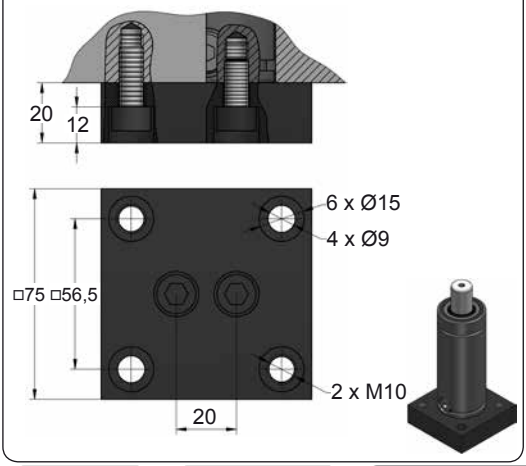


## B41-050

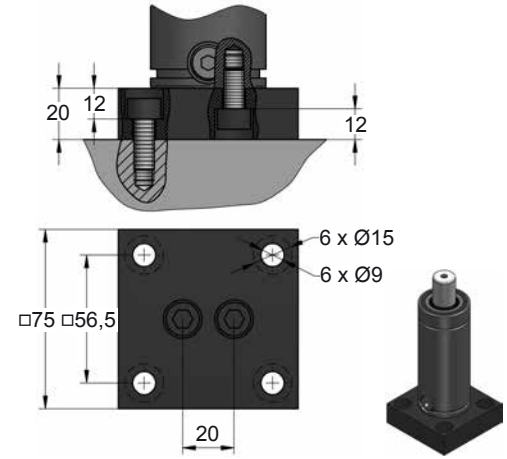









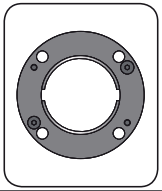

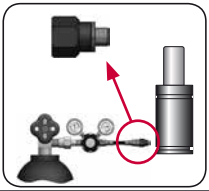

| CODE | | CT 750 050 | KIT XXXXXXX-S<br>KIT XXXXXXX-C | A14-050 | 06 GA 11 |
|---|---|---|---|---|---|
| ENG | ORDER | GAS SPRING | REPAIR KIT | FLANGE | CHARGING ADAPTER |
| DEU | BESTELLUNG | GASDRUCKFEDER | ERSATZTEILSATZ | FLANSCHE | LADEADAPTER |
| FRA | COMMANDE | RESSORT À GAZ | KIT DE RÉPARATION | BRIDE | RACCORD DE CHARGE |
| ITA | ORDINE | CILINDRO AD AZOTO | KIT DI MANUTENZIONE | FLANGE | ADATTATORE DI CARICO |
| ESP | PEDIDO | RESORTE DE GAS | KIT DE REPARACION | BRIDA | ADAPTADOR DE CARGA |
| POR | PEDIDO | CILINDRO DE GÁS | KIT DE MANUTENÇÃO | FLANGE | ADAPTADOR DE CARGA |

AZOL GAS

# CT 750 MOUNTS

*Low Profile*

## D02-050

ISO E24.54.815.G EM24.54.700/F

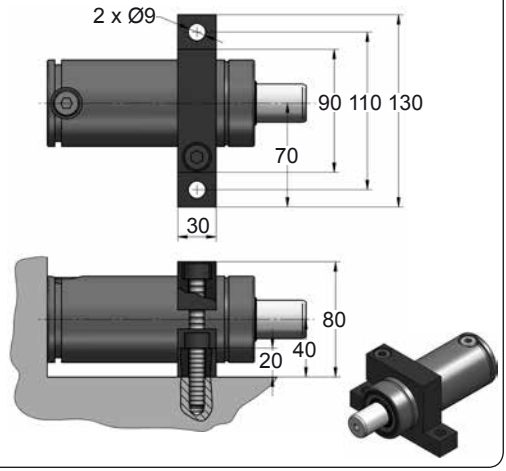


## D67-050

VDI

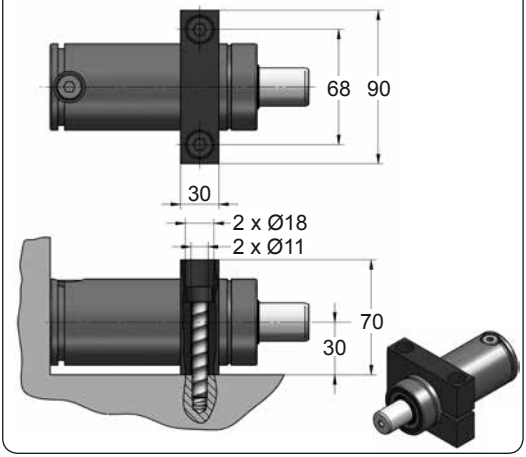









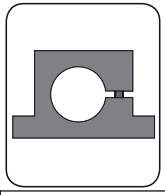

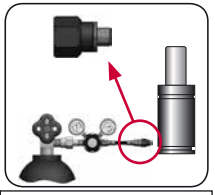

| CODE | | CT 750 050 | KIT XXXXXXX-S<br>KIT XXXXXXX-C | D02-050 | 06 GA 11 |
|---|---|---|---|---|---|
| ENG | ORDER | GAS SPRING | REPAIR KIT | FLANGE | CHARGING ADAPTER |
| DEU | BESTELLUNG | GASDRUCKFEDER | ERSATZTEILSATZ | FLANSCHE | LADEADAPTER |
| FRA | COMMANDE | RESSORT À GAZ | KIT DE RÉPARATION | BRIDE | RACCORD DE CHARGE |
| ITA | ORDINE | CILINDRO AD AZOTO | KIT DI MANUTENZIONE | FLANGE | ADATTATORE DI CARICO |
| ESP | PEDIDO | RESORTE DE GAS | KIT DE REPARACION | BRIDA | ADAPTADOR DE CARGA |
| POR | PEDIDO | CILINDRO DE GÁS | KIT DE MANUTENÇÃO | FLANGE | ADAPTADOR DE CARGA |

# CT 1000

*Low Profile*

AZOL GAS

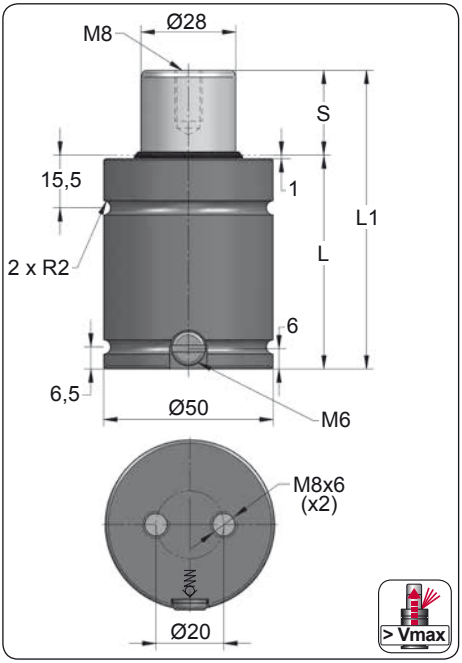


| ORDER | S (mm) | L1 ±0,25 (mm) | L (mm) | Kg. |
|---|---|---|---|---|
| CT 1000 005 | 5 | 48 | 43 | 0.53 |
| CT 1000 010 | 10 | 58 | 48 | 0.58 |
| CT 1000 012 | 12 | 62 | 50 | 0.60 |
| CT 1000 019 | 19 | 76 | 57 | 0.67 |
| CT 1000 025 | 25 | 88 | 63 | 0.73 |
| CT 1000 032 | 32 | 102 | 70 | 0.79 |
| CT 1000 038 | 38 | 114 | 76 | 0.85 |
| CT 1000 050 | 50 | 138 | 88 | 0.96 |
| CT 1000 063 | 63 | 164 | 101 | 1.09 |
| CT 1000 075 | 75 | 188 | 113 | 1.20 |
| CT 1000 080 | 80 | 198 | 118 | 1.25 |
| CT 1000 100 | 100 | 238 | 138 | 1.44 |
| CT 1000 125 | 125 | 288 | 163 | 1.67 |

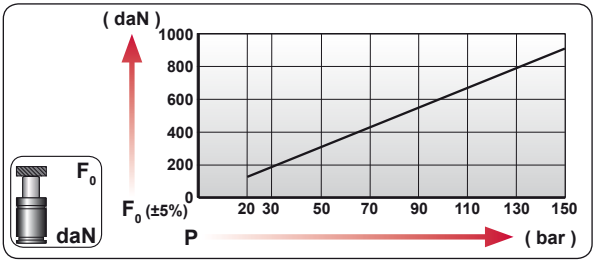


| CODE | bar | psi | $F_0$ daN | $F_1$ daN |
|---|---|---|---|---|
| CT 1000 050 | 160 | 2320 | 985 | 1760 |
| CT-H 1000 050 | 0 | 0 | --- | --- |

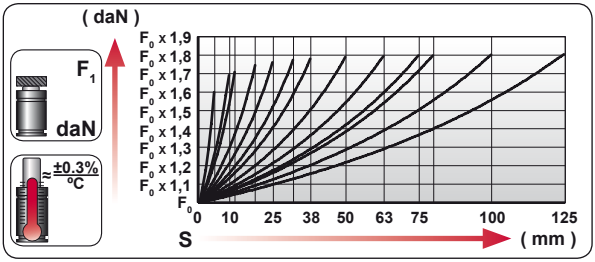


| | |
|---|---|
| ENG | ORDER |
| DEU | BESTELLUNG |
| FRA | COMMANDE |
| ITA | ORDINE |
| ESP | PEDIDO |
| POR | PEDIDO |




CT 1000 50

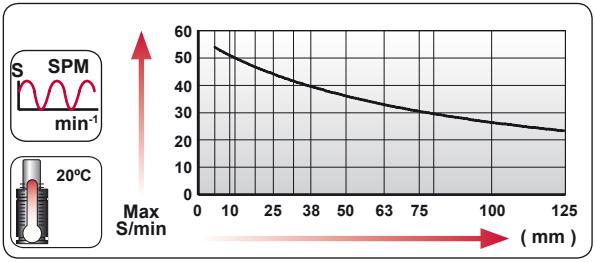


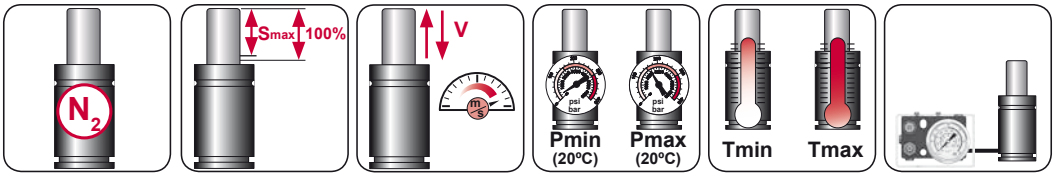


| $N_2$ | Smax < 90% | Vmax 1,6 m/s | bar psi 20 290 | bar psi 160 2320 | °C °F 0 32 | °C °F 80 176 | 600 CP- |
|---|---|---|---|---|---|---|---|

AZOL GAS

# CT 1000

*Low Profile*

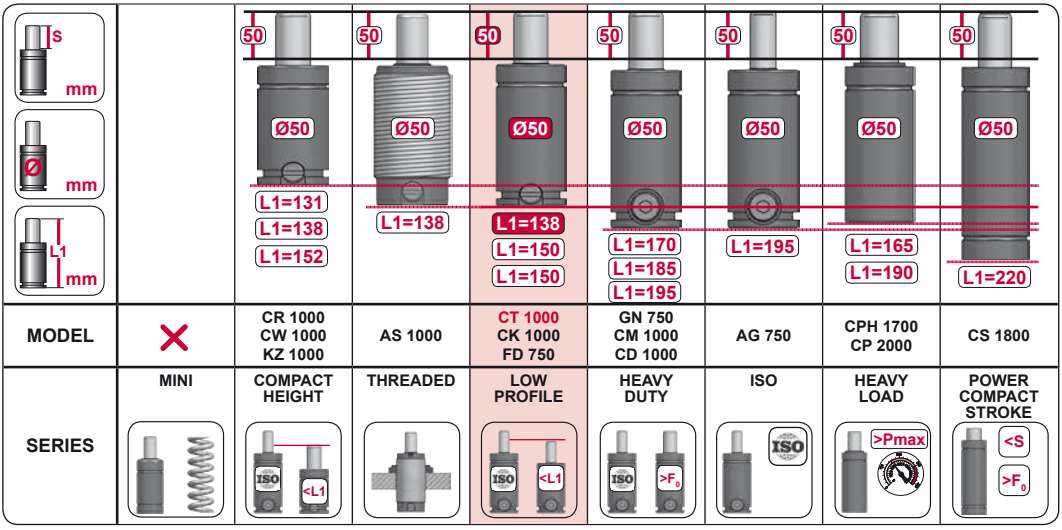


| MODEL | | CR 1000 CW 1000 KZ 1000 | AS 1000 | CT 1000 CK 1000 FD 750 | GN 750 CM 1000 CD 1000 | AG 750 | CPH 1700 CP 2000 | CS 1800 |
|---|---|---|---|---|---|---|---|---|
| SERIES | MINI | COMPACT HEIGHT | THREADED | LOW PROFILE | HEAVY DUTY | ISO | HEAVY LOAD | POWER COMPACT STROKE |

## CT










## CTN



































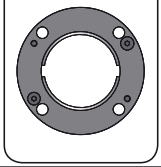

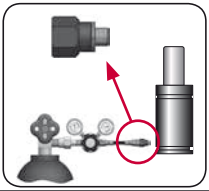

| CODE | | CT 1000 050 | KIT XXXXXXX-S KIT XXXXXXX-C | A14-050 | 06 GA 11 |
|---|---|---|---|---|---|
| ENG | ORDER | GAS SPRING | REPAIR KIT | FLANGE | CHARGING ADAPTER |
| DEU | BESTELLUNG | GASDRUCKFEDER | ERSATZTEILSATZ | FLANSCHE | LADEADAPTER |
| FRA | COMMANDE | RESSORT À GAZ | KIT DE RÉPARATION | BRIDE | RACCORD DE CHARGE |
| ITA | ORDINE | CILINDRO AD AZOTO | KIT DI MANUTENZIONE | FLANGE | ADATTATORE DI CARICO |
| ESP | PEDIDO | RESORTE DE GAS | KIT DE REPARACION | BRIDA | ADAPTADOR DE CARGA |
| POR | PEDIDO | CILINDRO DE GÁS | KIT DE MANUTENÇÃO | FLANGE | ADAPTADOR DE CARGA |

# CTC 1000

*Low Profile*

AZOL GAS

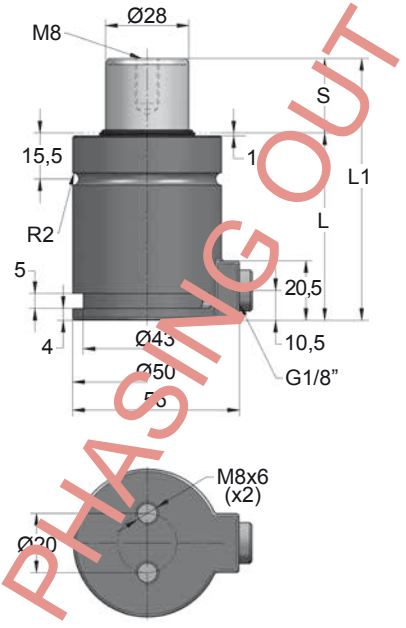


PHASING OUT

| ORDER | S (mm) | L1 ±0,25 (mm) | L (mm) | Kg. |
|---|---|---|---|---|
| CTC 1000 012 | 12 | 62 | 50 | 0.62 |
| CTC 1000 019 | 19 | 76 | 57 | 0.69 |
| CTC 1000 025 | 25 | 88 | 63 | 0.74 |
| CTC 1000 032 | 32 | 102 | 70 | 0.81 |
| CTC 1000 038 | 38 | 114 | 76 | 0.87 |
| CTC 1000 050 | 50 | 138 | 88 | 0.98 |
| CTC 1000 063 | 63 | 164 | 101 | 1.10 |
| CTC 1000 075 | 75 | 188 | 113 | 1.22 |
| CTC 1000 080 | 80 | 198 | 118 | 1.26 |
| CTC 1000 100 | 100 | 238 | 138 | 1.45 |
| CTC 1000 125 | 125 | 288 | 163 | 1.69 |

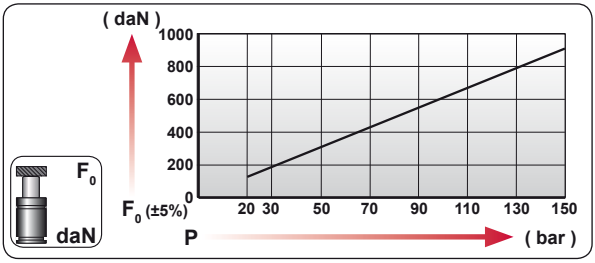


| CODE | bar | psi | F0 daN | F1 daN |
|---|---|---|---|---|
| --------- | --- | --- | --- | --- |
| CTC 1000 050 | 0 | 0 | --- | --- |

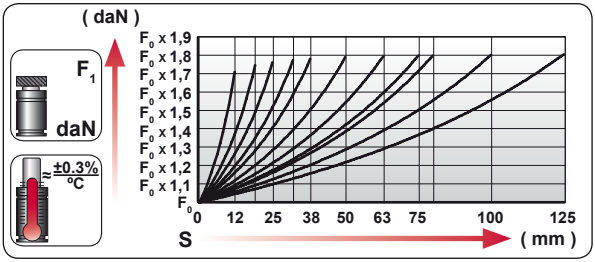


| | |
|---|---|
| ENG | ORDER |
| DEU | BESTELLUNG |
| FRA | COMMANDE |
| ITA | ORDINE |
| ESP | PEDIDO |
| POR | PEDIDO |




CTC 1000 50

CTC 1000 050

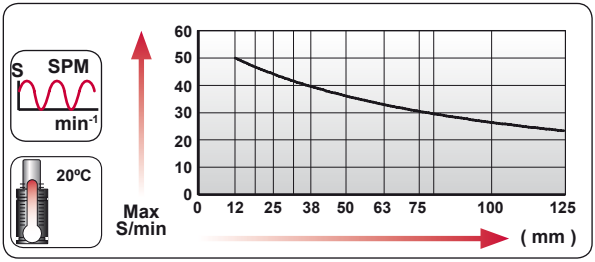


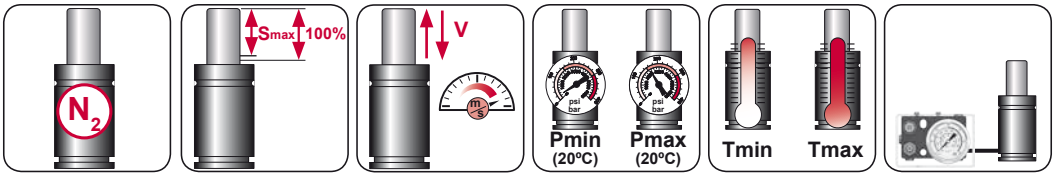


| $N_2$ | Smax < 90% | Vmax 1,6 m/s | bar psi 20 290 | bar psi 160 2320 | °C °F 0 32 | °C °F 80 176 | 600 CP- |
|---|---|---|---|---|---|---|---|

AZOL GAS

# CTC 1000 MOUNTS

*Low Profile*

## C55-050

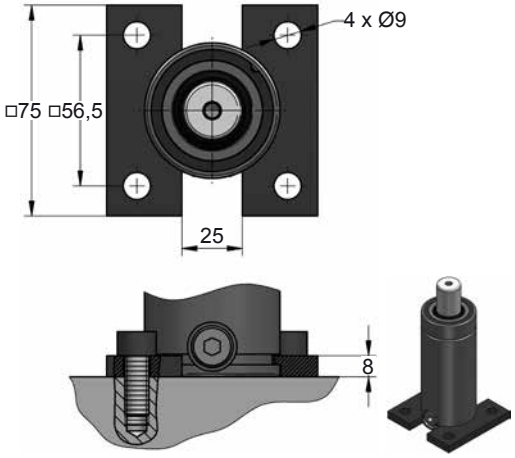









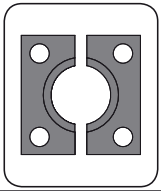

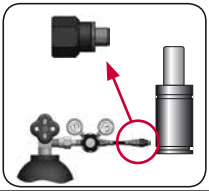

| CODE | | CTC 1000 050 | KIT XXXXXXX-S<br>KIT XXXXXXX-C | C55-050 | SKK 12R 1/8 |
|---|---|---|---|---|---|
| ENG | ORDER | GAS SPRING | REPAIR KIT | FLANGE | CHARGING ADAPTER |
| DEU | BESTELLUNG | GASDRUCKFEDER | ERSATZTEILSATZ | FLANSCHE | LADEADAPTER |
| FRA | COMMANDE | RESSORT À GAZ | KIT DE RÉPARATION | BRIDE | RACCORD DE CHARGE |
| ITA | ORDINE | CILINDRO AD AZOTO | KIT DI MANUTENZIONE | FLANGE | ADATTATORE DI CARICO |
| ESP | PEDIDO | RESORTE DE GAS | KIT DE REPARACION | BRIDA | ADAPTADOR DE CARGA |
| POR | PEDIDO | CILINDRO DE GÁS | KIT DE MANUTENÇÃO | FLANGE | ADAPTADOR DE CARGA |

# CTN 1000

*Low Profile*

AZOL GAS

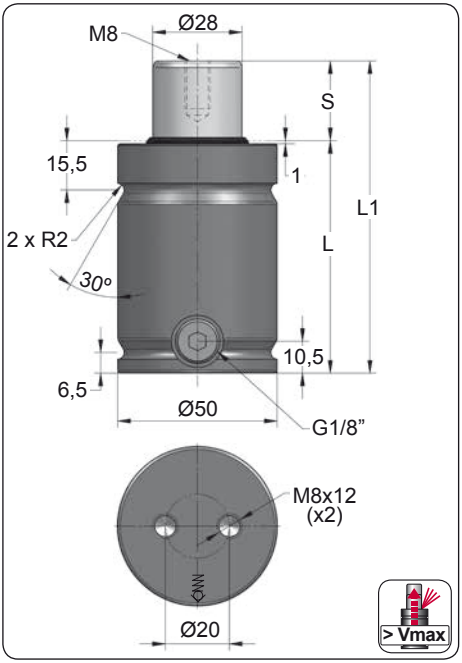


| ORDER | S (mm) | L1 ±0,25 (mm) | L (mm) | Kg. |
|---|---|---|---|---|
| CTN 1000 010 | 10 | 68 | 58 | 0.72 |
| CTN 1000 012 | 12 | 72 | 60 | 0.74 |
| CTN 1000 019 | 19 | 86 | 67 | 0.81 |
| CTN 1000 025 | 25 | 98 | 73 | 0.87 |
| CTN 1000 032 | 32 | 112 | 80 | 0.93 |
| CTN 1000 038 | 38 | 124 | 86 | 0.99 |
| CTN 1000 050 | 50 | 148 | 98 | 1.10 |
| CTN 1000 063 | 63 | 174 | 111 | 1.23 |
| CTN 1000 075 | 75 | 198 | 123 | 1.32 |
| CTN 1000 080 | 80 | 208 | 128 | 1.39 |
| CTN 1000 100 | 100 | 248 | 148 | 1.58 |
| CTN 1000 125 | 125 | 298 | 173 | 1.81 |

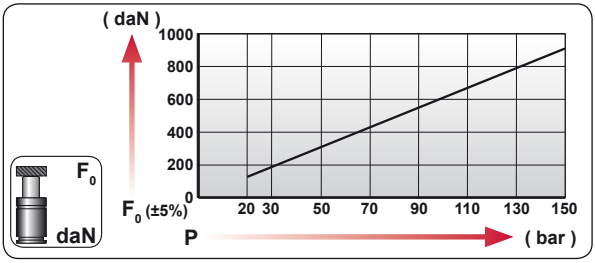


| CODE | bar | psi | $F_0$ daN | $F_1$ daN |
|---|---|---|---|---|
| CTN 1000 050 | 160 | 2320 | 985 | 1750 |
| CTN-H 1000 050 | 0 | 0 | --- | --- |

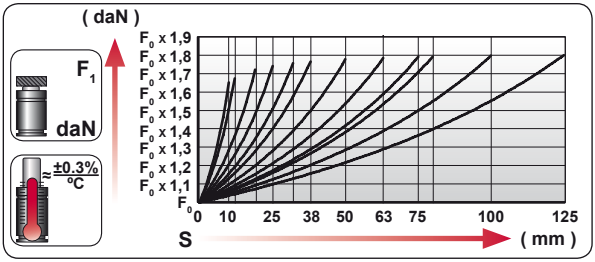


| | |
|---|---|
| ENG | ORDER |
| DEU | BESTELLUNG |
| FRA | COMMANDE |
| ITA | ORDINE |
| ESP | PEDIDO |
| POR | PEDIDO |




CTN 1000 50

CTN 1000 050

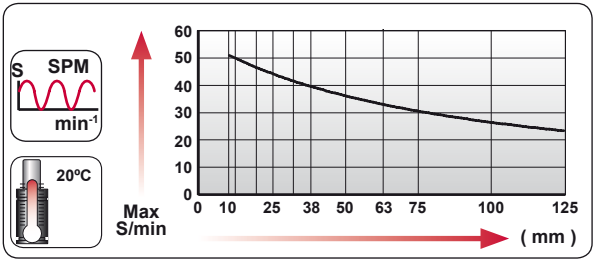


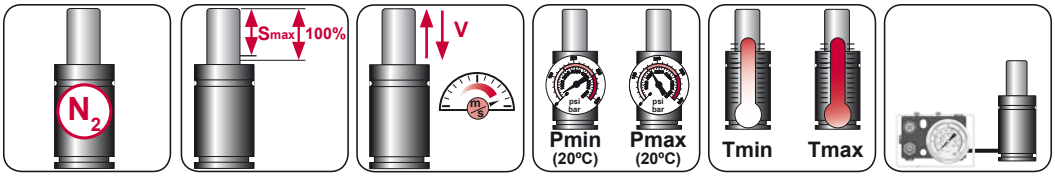


| $N_2$ | Smax < 90% | Vmax 1,6 m/s | bar psi 20 290 | bar psi 160 2320 | ºC ºF 0 32 | ºC ºF 80 176 | 600 CP- |
|---|---|---|---|---|---|---|---|

AZOL GAS

# CTN 1000

*Low Profile*




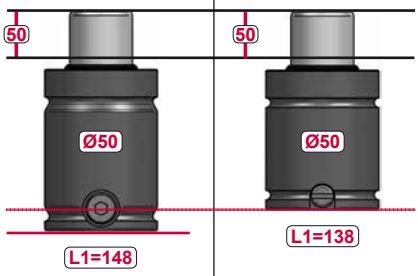


| MODEL | CTN 1000 | CT 1000 |
|---|---|---|

## CT

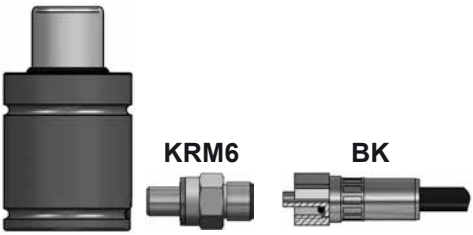


## CTN

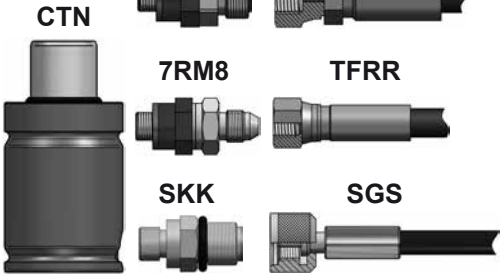









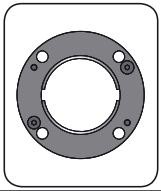

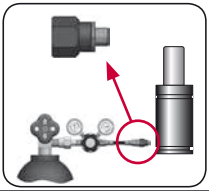

| CODE | | CTN 1000 050 | KIT XXXXXXX-S<br>KIT XXXXXXX-C | A14-050 | 18 GA 5 |
|---|---|---|---|---|---|
| ENG | ORDER | GAS SPRING | REPAIR KIT | FLANGE | CHARGING ADAPTER |
| DEU | BESTELLUNG | GASDRUCKFEDER | ERSATZTEILSATZ | FLANSCHE | LADEADAPTER |
| FRA | COMMANDE | RESSORT À GAZ | KIT DE RÉPARATION | BRIDE | RACCORD DE CHARGE |
| ITA | ORDINE | CILINDRO AD AZOTO | KIT DI MANUTENZIONE | FLANGE | ADATTATORE DI CARICO |
| ESP | PEDIDO | RESORTE DE GAS | KIT DE REPARACION | BRIDA | ADAPTADOR DE CARGA |
| POR | PEDIDO | CILINDRO DE GÁS | KIT DE MANUTENÇÃO | FLANGE | ADAPTADOR DE CARGA |

# CT 1000 MOUNTS

*Low Profile*

AZOL GAS

## A14-050

E24.54.815.G
EM24.54.700/F

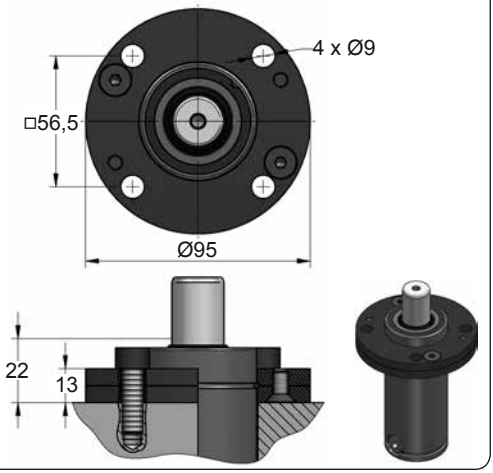


## A34-050

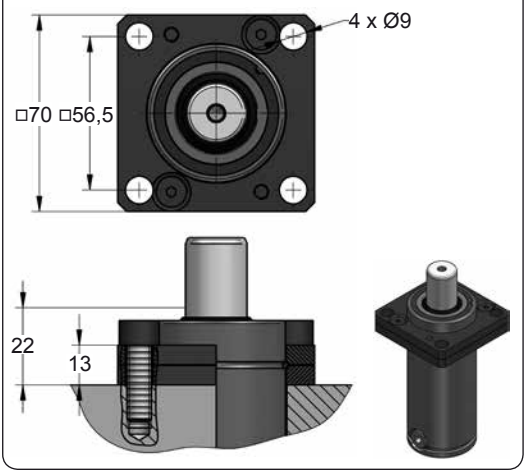


## B36-050

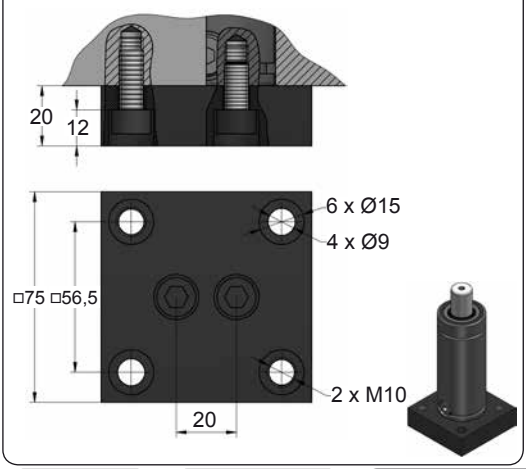


## B41-050

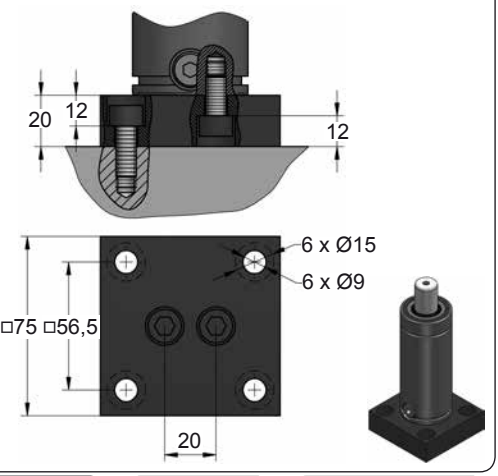









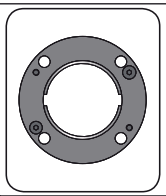

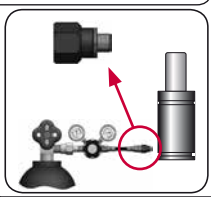

| CODE | | CT 1000 050 | KIT XXXXXXX-S<br>KIT XXXXXXX-C | A14-050 | 06 GA 11 |
|---|---|---|---|---|---|
| ENG | ORDER | GAS SPRING | REPAIR KIT | FLANGE | CHARGING ADAPTER |
| DEU | BESTELLUNG | GASDRUCKFEDER | ERSATZTEILSATZ | FLANSCHE | LADEADAPTER |
| FRA | COMMANDE | RESSORT À GAZ | KIT DE RÉPARATION | BRIDE | RACCORD DE CHARGE |
| ITA | ORDINE | CILINDRO AD AZOTO | KIT DI MANUTENZIONE | FLANGE | ADATTATORE DI CARICO |
| ESP | PEDIDO | RESORTE DE GAS | KIT DE REPARACION | BRIDA | ADAPTADOR DE CARGA |
| POR | PEDIDO | CILINDRO DE GÁS | KIT DE MANUTENÇÃO | FLANGE | ADAPTADOR DE CARGA |

AZOL GAS

# CT 1000 MOUNTS

*Low Profile*

## D02-050

ISO E24.54.815.G EM24.54.700/F

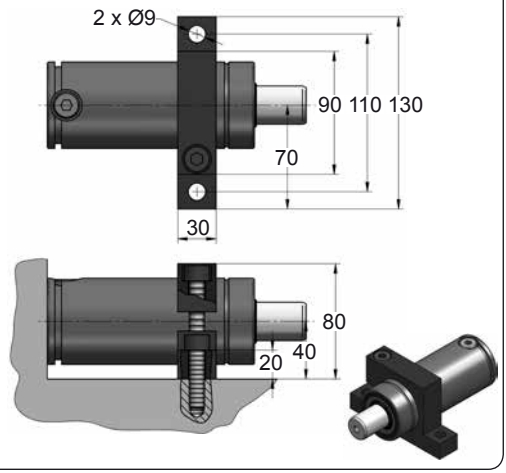


## D67-050

VDI

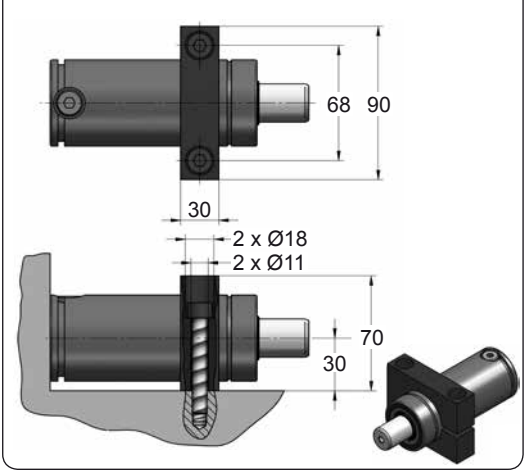









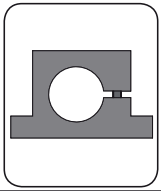

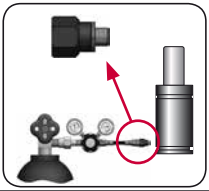

| CODE | | CT 1000 050 | KIT XXXXXXX-S<br>KIT XXXXXXX-C | D02-050 | 06 GA 11 |
|---|---|---|---|---|---|
| ENG | ORDER | GAS SPRING | REPAIR KIT | FLANGE | CHARGING ADAPTER |
| DEU | BESTELLUNG | GASDRUCKFEDER | ERSATZTEILSATZ | FLANSCHE | LADEADAPTER |
| FRA | COMMANDE | RESSORT À GAZ | KIT DE RÉPARATION | BRIDE | RACCORD DE CHARGE |
| ITA | ORDINE | CILINDRO AD AZOTO | KIT DI MANUTENZIONE | FLANGE | ADATTATORE DI CARICO |
| ESP | PEDIDO | RESORTE DE GAS | KIT DE REPARACION | BRIDA | ADAPTADOR DE CARGA |
| POR | PEDIDO | CILINDRO DE GÁS | KIT DE MANUTENÇÃO | FLANGE | ADAPTADOR DE CARGA |

# CT 1500

*Low Profile*

AZOL GAS

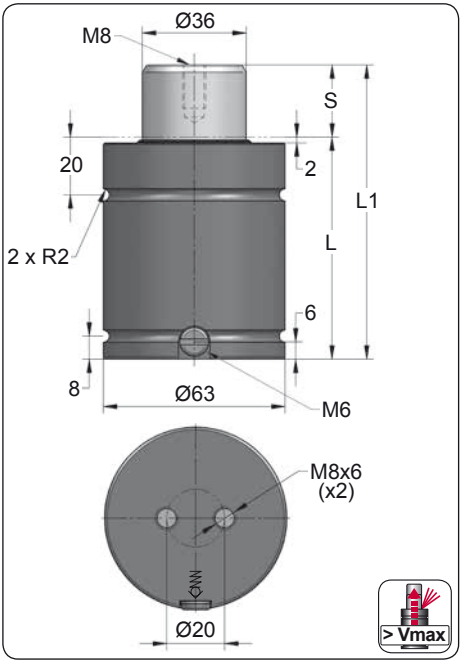


| ORDER | S (mm) | L1 ±0,25 (mm) | L (mm) | Kg. |
|---|---|---|---|---|
| CT 1500 012 | 12 | 76 | 64 | 1.19 |
| CT 1500 025 | 25 | 102 | 77 | 1.40 |
| CT 1500 038 | 38 | 128 | 90 | 1.57 |
| CT 1500 050 | 50 | 152 | 102 | 1.74 |
| CT 1500 063 | 63 | 178 | 115 | 1.96 |
| CT 1500 080 | 80 | 212 | 132 | 2.16 |
| CT 1500 100 | 100 | 252 | 152 | 2.44 |
| CT 1500 125 | 125 | 302 | 177 | 2.89 |

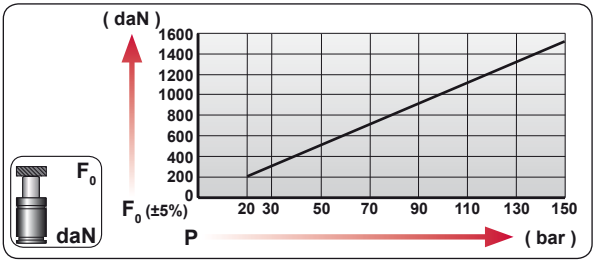


| CODE | bar | psi | $F_0$ daN | $F_1$ daN |
|---|---|---|---|---|
| CT 1500 050 | 150 | 2175 | 1530 | 2630 |
| CT-H 1500 050 | 0 | 0 | --- | --- |

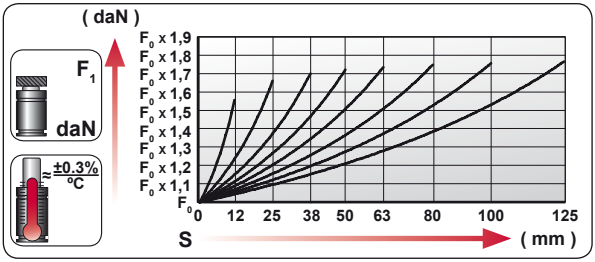


| | |
|---|---|
| ENG | ORDER |
| DEU | BESTELLUNG |
| FRA | COMMANDE |
| ITA | ORDINE |
| ESP | PEDIDO |
| POR | PEDIDO |




CT 1500 50

CT 1500 050

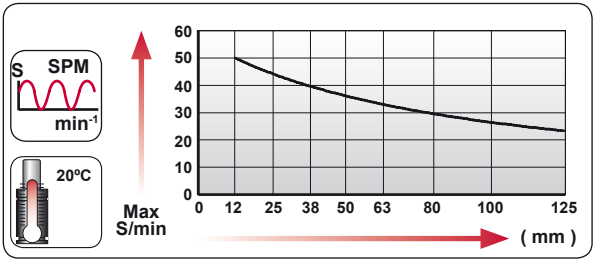


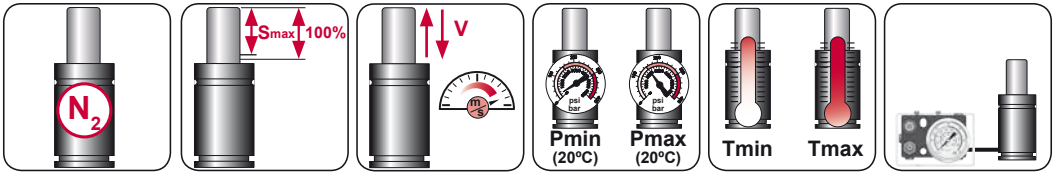


| $N_2$ | Smax < 90% | Vmax 1,6 m/s | bar psi 20 290 | bar psi 150 2175 | °C °F 0 32 | °C °F 80 176 | 600 CP- |
|---|---|---|---|---|---|---|---|

AZOL GAS

# CT 1500

*Low Profile*

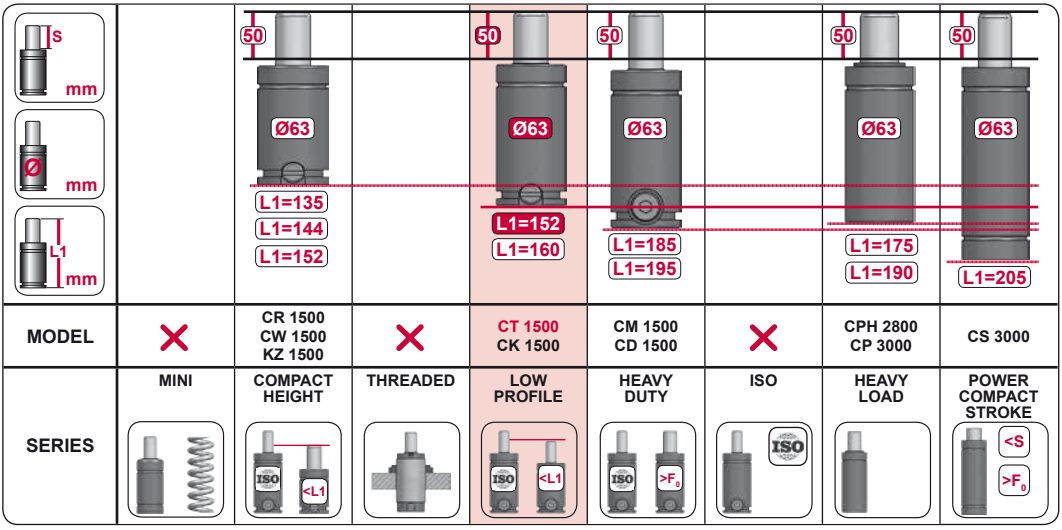


| MODEL | × | CR 1500 CW 1500 KZ 1500 | × | CT 1500 CK 1500 | CM 1500 CD 1500 | × | CPH 2800 CP 3000 | CS 3000 |
|---|---|---|---|---|---|---|---|---|
| SERIES | MINI | COMPACT HEIGHT | THREADED | LOW PROFILE | HEAVY DUTY | ISO | HEAVY LOAD | POWER COMPACT STROKE |

## CT

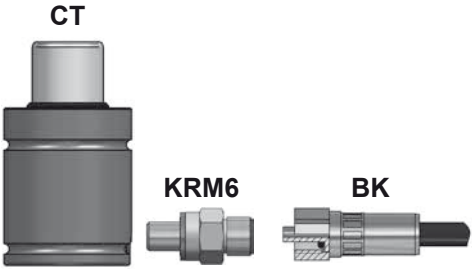


## CTN

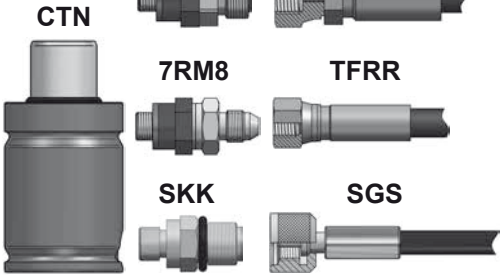





| CODE | | CT 1500 050 | KIT XXXXXXX-S KIT XXXXXXX-C | A14-063 | 06 GA 11 |
|---|---|---|---|---|---|
| ENG | ORDER | GAS SPRING | REPAIR KIT | FLANGE | CHARGING ADAPTER |
| DEU | BESTELLUNG | GASDRUCKFEDER | ERSATZTEILSATZ | FLANSCHE | LADEADAPTER |
| FRA | COMMANDE | RESSORT À GAZ | KIT DE RÉPARATION | BRIDE | RACCORD DE CHARGE |
| ITA | ORDINE | CILINDRO AD AZOTO | KIT DI MANUTENZIONE | FLANGE | ADATTATORE DI CARICO |
| ESP | PEDIDO | RESORTE DE GAS | KIT DE REPARACION | BRIDA | ADAPTADOR DE CARGA |
| POR | PEDIDO | CILINDRO DE GÁS | KIT DE MANUTENÇÃO | FLANGE | ADAPTADOR DE CARGA |

# CTC 1500

*Low Profile*

AZOL GAS

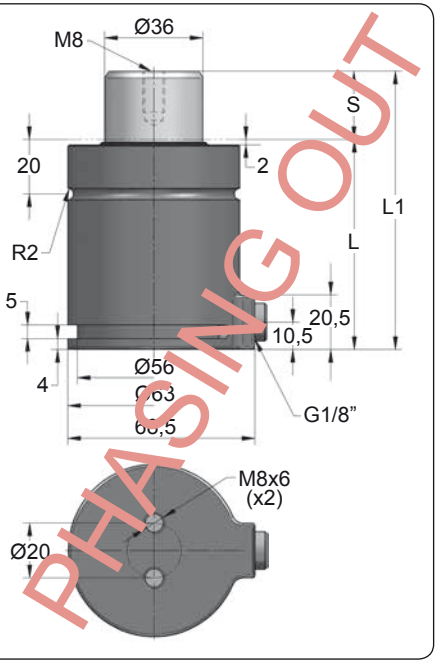


| ORDER | S (mm) | L1 ±0,25 (mm) | L (mm) | Kg. |
|---|---|---|---|---|
| CTC 1500 012 | 12 | 76 | 64 | 1.25 |
| CTC 1500 025 | 25 | 102 | 77 | 1.48 |
| CTC 1500 038 | 38 | 128 | 90 | 1.65 |
| CTC 1500 050 | 50 | 152 | 102 | 1.83 |
| CTC 1500 063 | 63 | 178 | 115 | 2.06 |
| CTC 1500 080 | 80 | 212 | 132 | 2.27 |
| CTC 1500 100 | 100 | 252 | 152 | 2.57 |
| CTC 1500 125 | 125 | 302 | 177 | 3.04 |

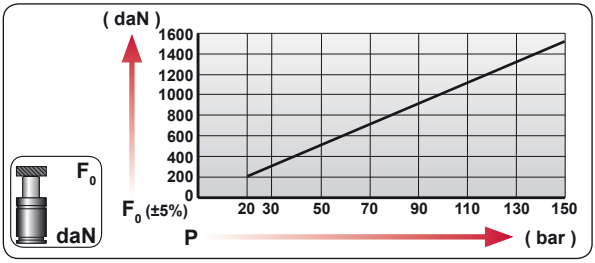


| CODE | bar | psi | $F_0$ daN | $F_1$ daN |
|---|---|---|---|---|
| --------- | --- | --- | --- | --- |
| CTC 1500 050 | 0 | 0 | --- | --- |

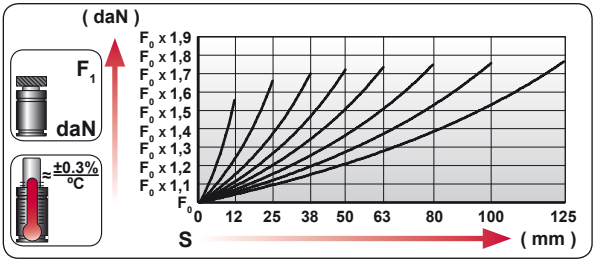


| | |
|---|---|
| ENG | ORDER |
| DEU | BESTELLUNG |
| FRA | COMMANDE |
| ITA | ORDINE |
| ESP | PEDIDO |
| POR | PEDIDO |

$F_0$ daN — S mm

CTC 1500 50

CTC 1500 050

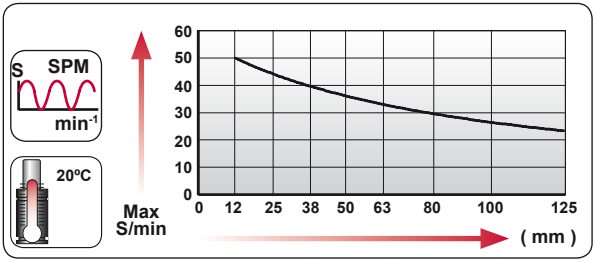


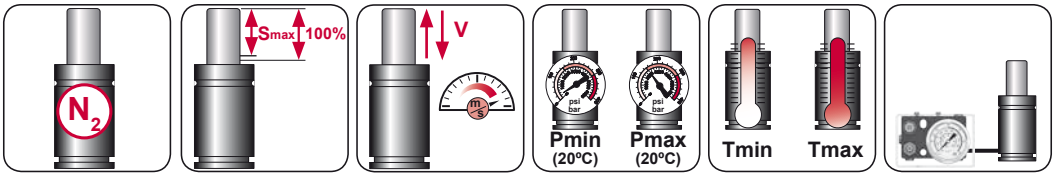


| $N_2$ | Smax < 90% | Vmax 1,6 m/s | bar psi 20 290 | bar psi 150 2175 | ºC ºF 0 32 | ºC ºF 80 176 | 600 CP- |
|---|---|---|---|---|---|---|---|

AZOL GAS

# CTC 1500 MOUNTS

*Low Profile*

## C55-063

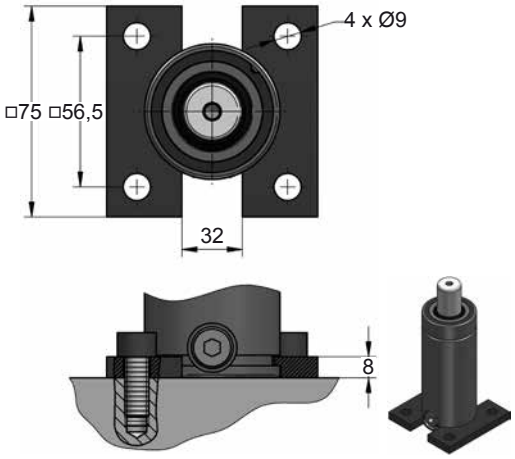




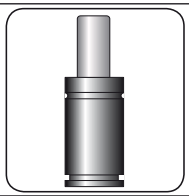




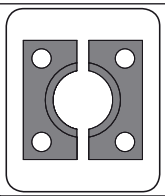

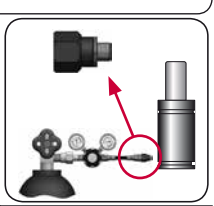

| CODE | | CTC 1500 050 | KIT XXXXXXX-S<br>KIT XXXXXXX-C | C55-063 | SKK 12R 1/8 |
|---|---|---|---|---|---|
| ENG | ORDER | GAS SPRING | REPAIR KIT | FLANGE | CHARGING ADAPTER |
| DEU | BESTELLUNG | GASDRUCKFEDER | ERSATZTEILSATZ | FLANSCHE | LADEADAPTER |
| FRA | COMMANDE | RESSORT À GAZ | KIT DE RÉPARATION | BRIDE | RACCORD DE CHARGE |
| ITA | ORDINE | CILINDRO AD AZOTO | KIT DI MANUTENZIONE | FLANGE | ADATTATORE DI CARICO |
| ESP | PEDIDO | RESORTE DE GAS | KIT DE REPARACION | BRIDA | ADAPTADOR DE CARGA |
| POR | PEDIDO | CILINDRO DE GÁS | KIT DE MANUTENÇÃO | FLANGE | ADAPTADOR DE CARGA |

# CTN 1500

*Low Profile*

AZOL GAS

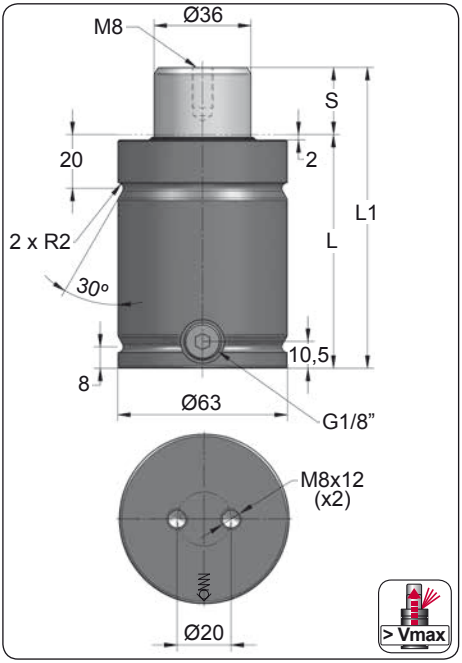


| ORDER | S (mm) | L1 ±0,25 (mm) | L (mm) | Kg. |
|---|---|---|---|---|
| CTN 1500 012 | 12 | 86 | 74 | 1.44 |
| CTN 1500 016 | 16 | 94 | 78 | 1.49 |
| CTN 1500 025 | 25 | 112 | 87 | 1.63 |
| CTN 1500 038 | 38 | 138 | 100 | 1.82 |
| CTN 1500 050 | 50 | 162 | 112 | 1.99 |
| CTN 1500 063 | 63 | 188 | 125 | 2.18 |
| CTN 1500 080 | 80 | 222 | 142 | 2.42 |
| CTN 1500 100 | 100 | 262 | 162 | 2.71 |
| CTN 1500 125 | 125 | 312 | 187 | 3.07 |

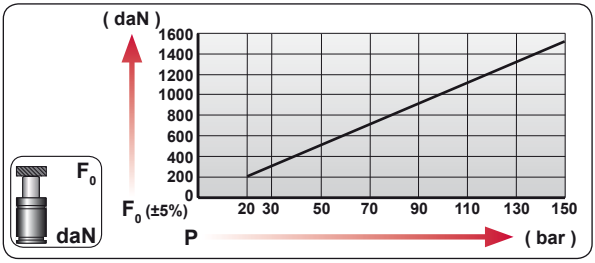


| CODE | bar | psi | $F_0$ daN | $F_1$ daN |
|---|---|---|---|---|
| CTN 1500 050 | 150 | 2175 | 1530 | 2600 |
| CTN-H 1500 050 | 0 | 0 | --- | --- |

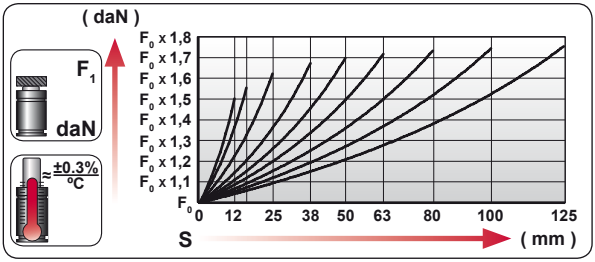


| | |
|---|---|
| ENG | ORDER |
| DEU | BESTELLUNG |
| FRA | COMMANDE |
| ITA | ORDINE |
| ESP | PEDIDO |
| POR | PEDIDO |




CTN 1500 50

CTN 1500 050

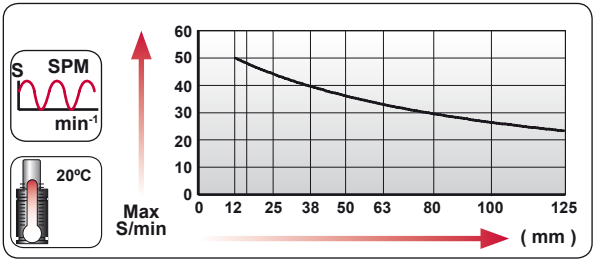


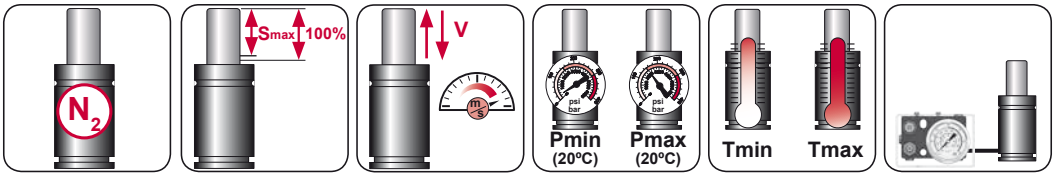


| $N_2$ | Smax < 90% | Vmax 1,6 m/s | bar psi 20 290 | bar psi 150 2175 | ºC ºF 0 32 | ºC ºF 80 176 | 600 CP- |
|---|---|---|---|---|---|---|---|

AZOL GAS

# CTN 1500

*Low Profile*




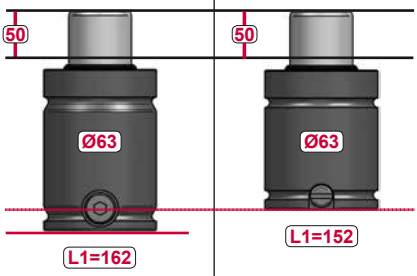


| MODEL | CTN 1500 | CT 1500 |
|---|---|---|

## CT










## CTN



































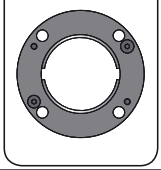

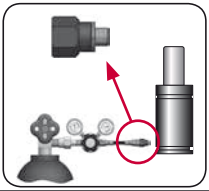

| CODE | | CTN 1500 050 | KIT XXXXXXX-S<br>KIT XXXXXXX-C | A14-063 | 18 GA 5 |
|---|---|---|---|---|---|
| ENG | ORDER | GAS SPRING | REPAIR KIT | FLANGE | CHARGING ADAPTER |
| DEU | BESTELLUNG | GASDRUCKFEDER | ERSATZTEILSATZ | FLANSCHE | LADEADAPTER |
| FRA | COMMANDE | RESSORT À GAZ | KIT DE RÉPARATION | BRIDE | RACCORD DE CHARGE |
| ITA | ORDINE | CILINDRO AD AZOTO | KIT DI MANUTENZIONE | FLANGE | ADATTATORE DI CARICO |
| ESP | PEDIDO | RESORTE DE GAS | KIT DE REPARACION | BRIDA | ADAPTADOR DE CARGA |
| POR | PEDIDO | CILINDRO DE GÁS | KIT DE MANUTENÇÃO | FLANGE | ADAPTADOR DE CARGA |

# CT 1500 MOUNTS

*Low Profile*

AZOL GAS

## A14-063

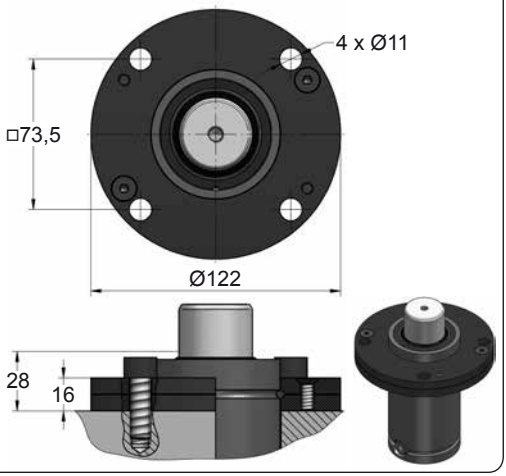


## A39-063

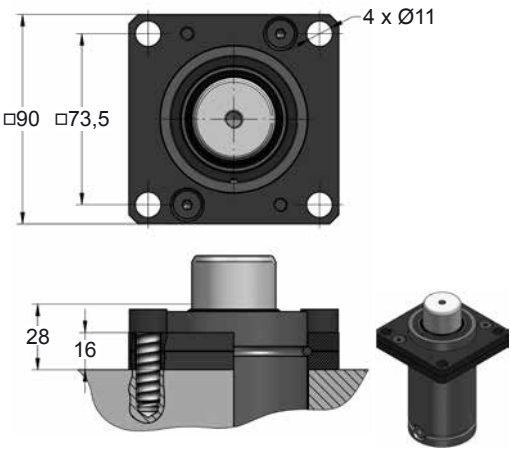


## A69-063

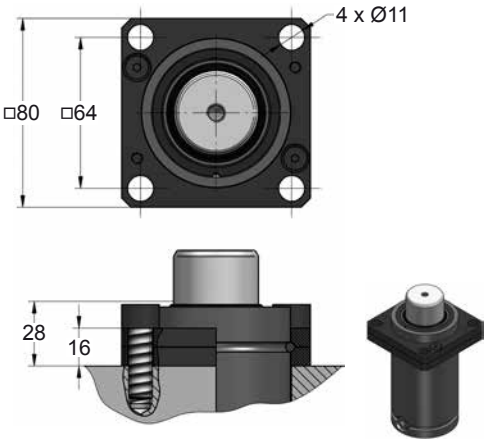









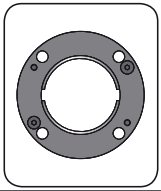

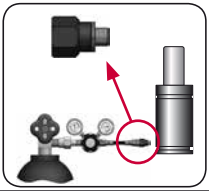

| CODE | | CT 1500 050 | KIT XXXXXXX-S<br>KIT XXXXXXX-C | A14-063 | 06 GA 11 |
|---|---|---|---|---|---|
| ENG | ORDER | GAS SPRING | REPAIR KIT | FLANGE | CHARGING ADAPTER |
| DEU | BESTELLUNG | GASDRUCKFEDER | ERSATZTEILSATZ | FLANSCHE | LADEADAPTER |
| FRA | COMMANDE | RESSORT À GAZ | KIT DE RÉPARATION | BRIDE | RACCORD DE CHARGE |
| ITA | ORDINE | CILINDRO AD AZOTO | KIT DI MANUTENZIONE | FLANGE | ADATTATORE DI CARICO |
| ESP | PEDIDO | RESORTE DE GAS | KIT DE REPARACION | BRIDA | ADAPTADOR DE CARGA |
| POR | PEDIDO | CILINDRO DE GÁS | KIT DE MANUTENÇÃO | FLANGE | ADAPTADOR DE CARGA |

AZOL GAS

# CT 1500 MOUNTS

*Low Profile*

## B36-063

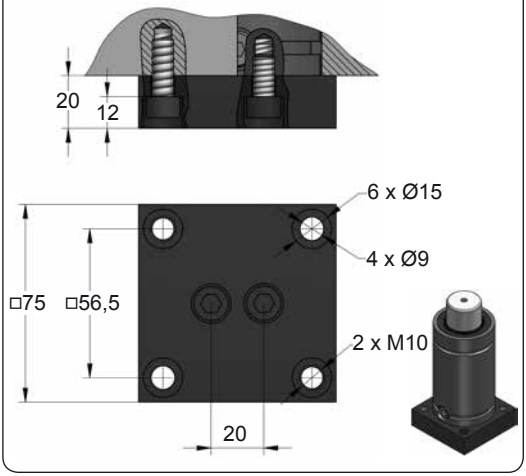


## B41-063

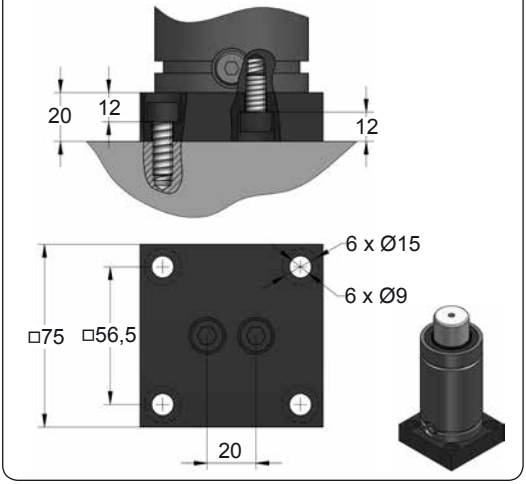


## D67-063

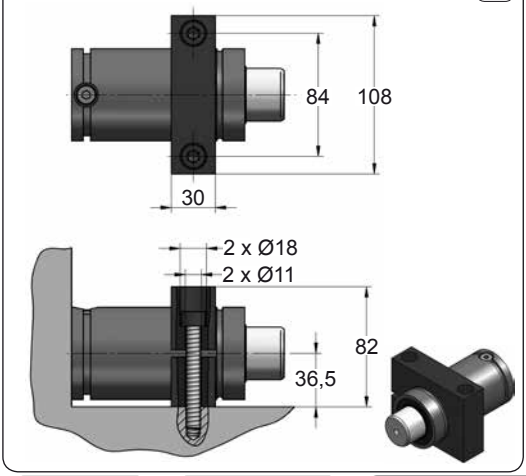





| CODE | | CT 1500 050 | KIT XXXXXXX-S<br>KIT XXXXXXX-C | B36-063 | 06 GA 11 |
|---|---|---|---|---|---|
| ENG | ORDER | GAS SPRING | REPAIR KIT | FLANGE | CHARGING ADAPTER |
| DEU | BESTELLUNG | GASDRUCKFEDER | ERSATZTEILSATZ | FLANSCHE | LADEADAPTER |
| FRA | COMMANDE | RESSORT À GAZ | KIT DE RÉPARATION | BRIDE | RACCORD DE CHARGE |
| ITA | ORDINE | CILINDRO AD AZOTO | KIT DI MANUTENZIONE | FLANGE | ADATTATORE DI CARICO |
| ESP | PEDIDO | RESORTE DE GAS | KIT DE REPARACION | BRIDA | ADAPTADOR DE CARGA |
| POR | PEDIDO | CILINDRO DE GÁS | KIT DE MANUTENÇÃO | FLANGE | ADAPTADOR DE CARGA |

# CT 2500

*Low Profile*

AZOL GAS

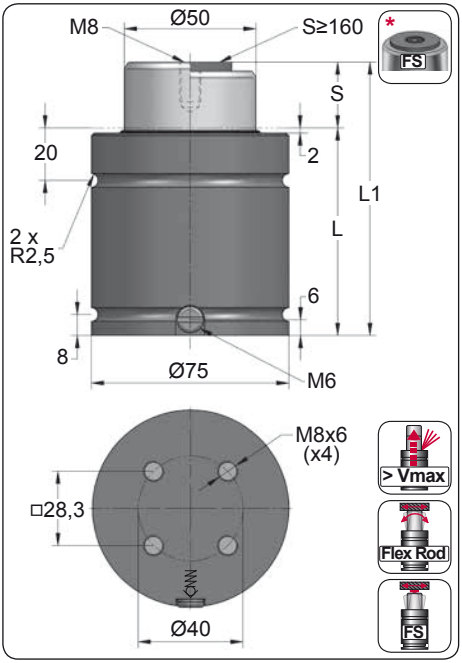


| ORDER | S (mm) | L1 ±0,25 (mm) | L (mm) | Kg. |
|---|---|---|---|---|
| CT 2500 012 | 12 | 78 | 66 | 2.00 |
| CT 2500 025 | 25 | 104 | 79 | 2.15 |
| CT 2500 038 | 38 | 130 | 92 | 2.22 |
| CT 2500 050 | 50 | 154 | 104 | 2.55 |
| CT 2500 063 | 63 | 180 | 117 | 2.75 |
| CT 2500 080 | 80 | 214 | 134 | 3.07 |
| CT 2500 100 | 100 | 254 | 154 | 3.60 |
| CT 2500 125 | 125 | 304 | 179 | 4.30 |
| CT 2500 160 * | 160 | 374 | 214 | 4.97 |
| CT 2500 200 * | 200 | 454 | 254 | 5.00 |

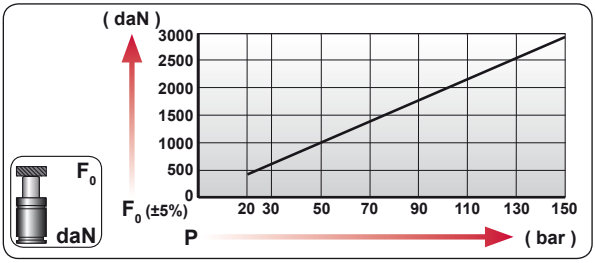


| CODE | bar | psi | $F_0$ daN | $F_1$ daN |
|---|---|---|---|---|
| CT 2500 050 | 130 | 1885 | 2550 | 4885 |
| CT-H 2500 050 | 0 | 0 | --- | --- |

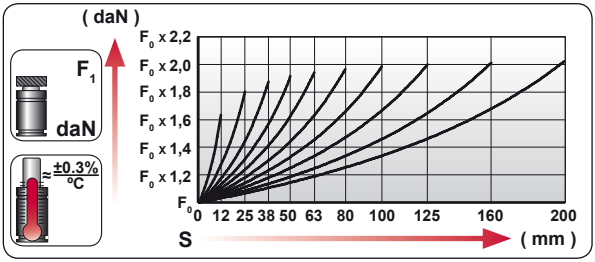


| | |
|---|---|
| ENG | ORDER |
| DEU | BESTELLUNG |
| FRA | COMMANDE |
| ITA | ORDINE |
| ESP | PEDIDO |
| POR | PEDIDO |

$F_0$ daN — S mm

CT 2500 50

CT 2500 050

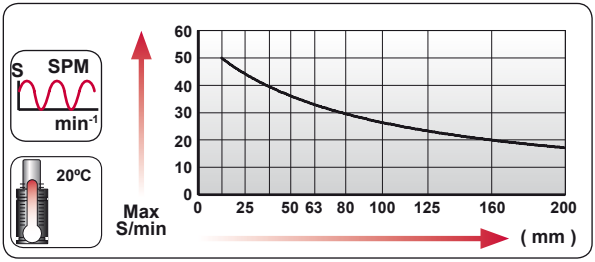


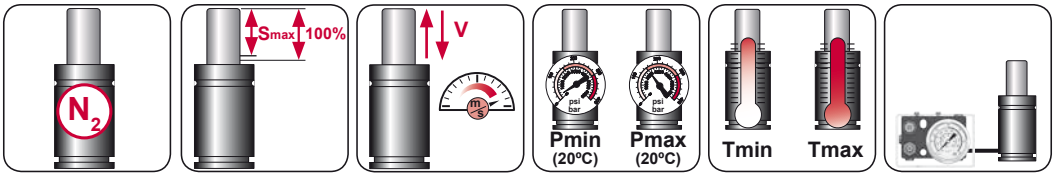


| $N_2$ | Smax < 90% | Vmax 1,6 m/s | bar psi 20 290 | bar psi 150 2175 | °C °F 0 32 | °C °F 80 176 | 600 CP- |
|---|---|---|---|---|---|---|---|

AZOL GAS

# CT 2500

*Low Profile*

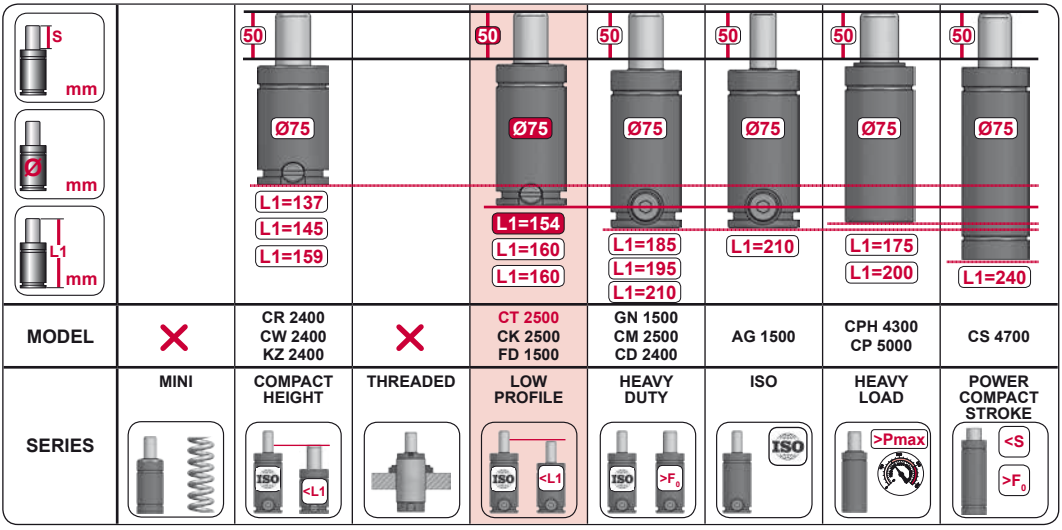


## CT

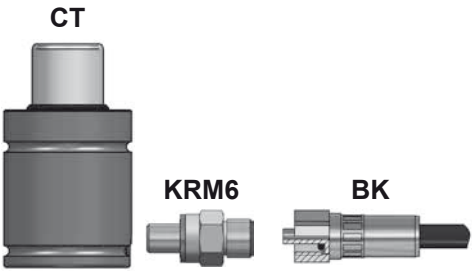


## CTN

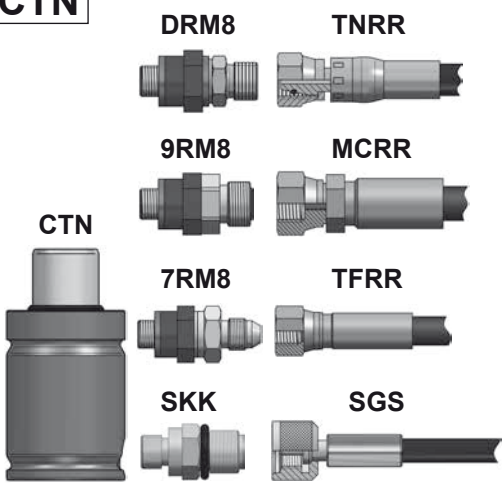





| CODE | | CT 2500 050 | KIT XXXXXXX-S<br>KIT XXXXXXX-C | A14-075 | 06 GA 11 |
|---|---|---|---|---|---|
| ENG | ORDER | GAS SPRING | REPAIR KIT | FLANGE | CHARGING ADAPTER |
| DEU | BESTELLUNG | GASDRUCKFEDER | ERSATZTEILSATZ | FLANSCHE | LADEADAPTER |
| FRA | COMMANDE | RESSORT À GAZ | KIT DE RÉPARATION | BRIDE | RACCORD DE CHARGE |
| ITA | ORDINE | CILINDRO AD AZOTO | KIT DI MANUTENZIONE | FLANGE | ADATTATORE DI CARICO |
| ESP | PEDIDO | RESORTE DE GAS | KIT DE REPARACION | BRIDA | ADAPTADOR DE CARGA |
| POR | PEDIDO | CILINDRO DE GÁS | KIT DE MANUTENÇÃO | FLANGE | ADAPTADOR DE CARGA |

# CTC 2500

*Low Profile*

AZOL GAS

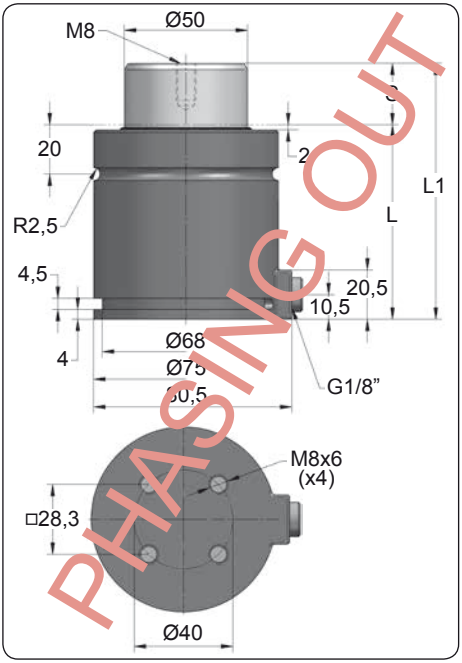


| ORDER | S (mm) | L1 ±0,25 (mm) | L (mm) | Kg. |
|---|---|---|---|---|
| CTC 2500 012 | 12 | 78 | 66 | 2.11 |
| CTC 2500 025 | 25 | 104 | 79 | 2.26 |
| CTC 2500 038 | 38 | 130 | 92 | 2.34 |
| CTC 2500 050 | 50 | 154 | 104 | 2.68 |
| CTC 2500 063 | 63 | 180 | 117 | 2.90 |
| CTC 2500 080 | 80 | 214 | 134 | 3.23 |
| CTC 2500 100 | 100 | 254 | 154 | 3.79 |
| CTC 2500 125 | 125 | 304 | 179 | 4.52 |
| CTC 2500 160 | 160 | 374 | 214 | 5.23 |
| CTC 2500 200 | 200 | 454 | 254 | 5.26 |

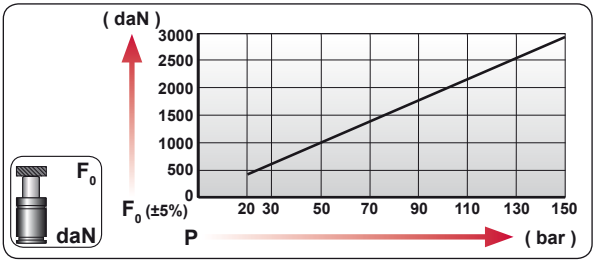


| CODE | bar | psi | F0 daN | F1 daN |
|---|---|---|---|---|
| --------- | --- | --- | --- | --- |
| CTC 2500 050 | 0 | 0 | --- | --- |

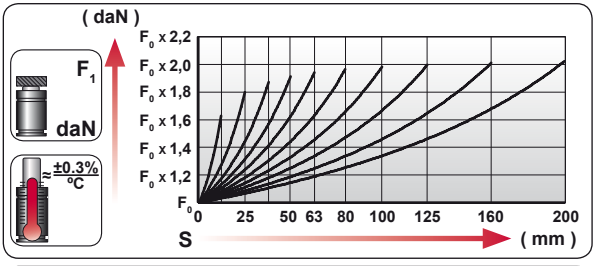


| | ENG | ORDER |
|---|---|---|
| | DEU | BESTELLUNG |
| | FRA | COMMANDE |
| | ITA | ORDINE |
| | ESP | PEDIDO |
| | POR | PEDIDO |

F0 daN — S mm

CTC 2500 50

CTC 2500 050

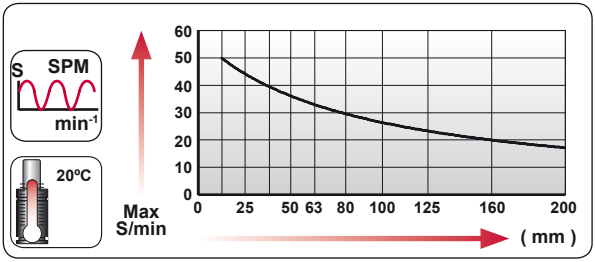


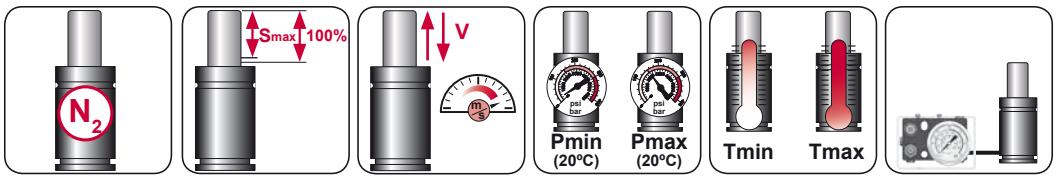


| $N_2$ | Smax < 90% | Vmax 1,6 m/s | bar psi 20 290 | bar psi 150 2175 | ºC ºF 0 32 | ºC ºF 80 176 | 600 CP- |
|---|---|---|---|---|---|---|---|

AZOL GAS

# CTC 2500 MOUNTS

*Low Profile*

## C55-075

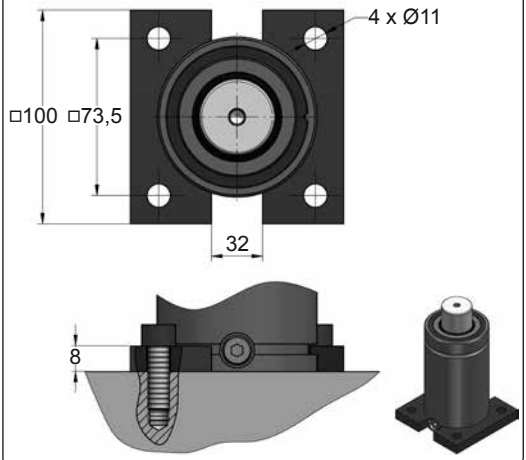




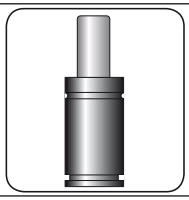




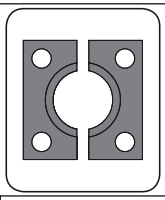

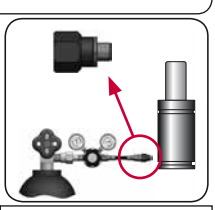

| CODE | | CTC 2500 050 | KIT XXXXXXX-S<br>KIT XXXXXXX-C | C55-075 | SKK 12R 1/8 |
|---|---|---|---|---|---|
| ENG | ORDER | GAS SPRING | REPAIR KIT | FLANGE | CHARGING ADAPTER |
| DEU | BESTELLUNG | GASDRUCKFEDER | ERSATZTEILSATZ | FLANSCHE | LADEADAPTER |
| FRA | COMMANDE | RESSORT À GAZ | KIT DE RÉPARATION | BRIDE | RACCORD DE CHARGE |
| ITA | ORDINE | CILINDRO AD AZOTO | KIT DI MANUTENZIONE | FLANGE | ADATTATORE DI CARICO |
| ESP | PEDIDO | RESORTE DE GAS | KIT DE REPARACION | BRIDA | ADAPTADOR DE CARGA |
| POR | PEDIDO | CILINDRO DE GÁS | KIT DE MANUTENÇÃO | FLANGE | ADAPTADOR DE CARGA |

# CTN 2500

*Low Profile*

AZOL GAS

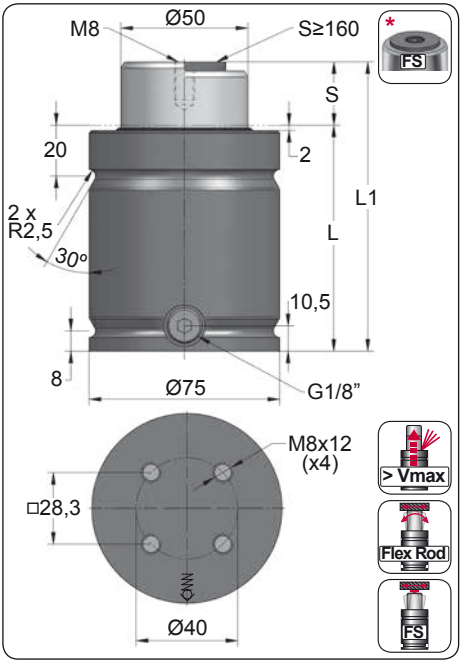


| ORDER | S (mm) | L1 ±0,25 (mm) | L (mm) | Kg. |
|---|---|---|---|---|
| CTN 2500 012 | 12 | 88 | 76 | 2.08 |
| CTN 2500 025 | 25 | 114 | 89 | 2.34 |
| CTN 2500 038 | 38 | 140 | 102 | 2.60 |
| CTN 2500 050 | 50 | 164 | 114 | 2.84 |
| CTN 2500 063 | 63 | 190 | 127 | 3.11 |
| CTN 2500 080 | 80 | 224 | 144 | 3.45 |
| CTN 2500 100 | 100 | 264 | 164 | 3.85 |
| CTN 2500 125 | 125 | 314 | 189 | 4.36 |
| CTN 2500 160 * | 160 | 384 | 224 | 5.07 |
| CTN 2500 200 * | 200 | 464 | 264 | 5.87 |

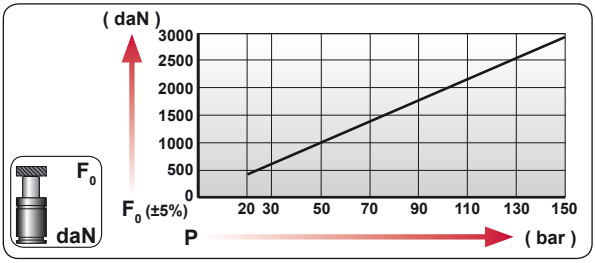


| CODE | bar | psi | F0 daN | F1 daN |
|---|---|---|---|---|
| CTN 2500 050 | 130 | 1885 | 2550 | 4890 |
| CTN-H 2500 050 | 0 | 0 | --- | --- |

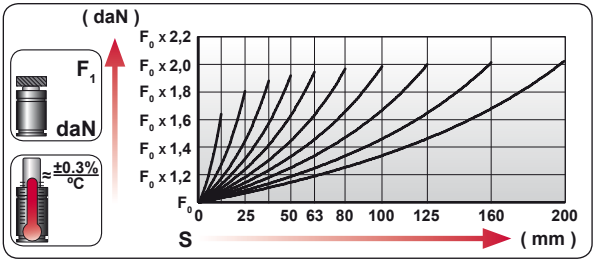


| ENG | ORDER |
|---|---|
| DEU | BESTELLUNG |
| FRA | COMMANDE |
| ITA | ORDINE |
| ESP | PEDIDO |
| POR | PEDIDO |

F0 daN — S mm

CTN 2500 50

CTN 2500 050

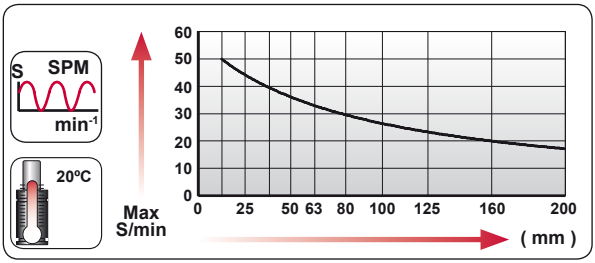


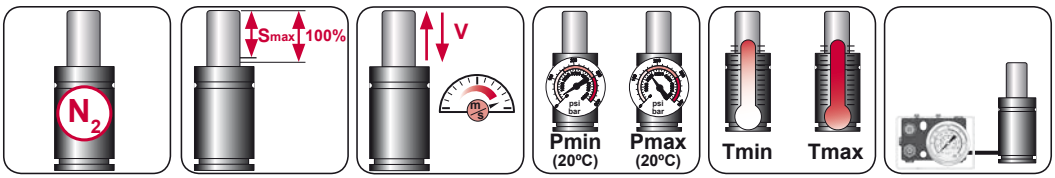


| $N_2$ | Smax < 90% | Vmax 1,6 m/s | bar psi 20 290 | bar psi 150 2175 | ºC ºF 0 32 | ºC ºF 80 176 | 600 CP- |
|---|---|---|---|---|---|---|---|

AZOL GAS

# CTN 2500

*Low Profile*




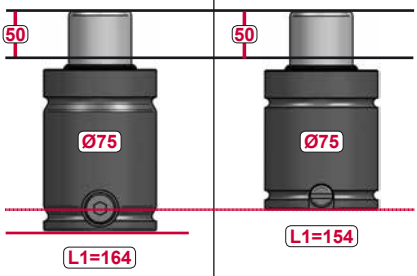


| MODEL | CTN 2500 | CT 2500 |
|---|---|---|

## CT










## CTN



































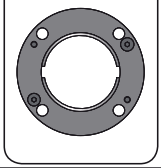

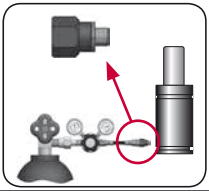

| CODE | | CTN 2500 050 | KIT XXXXXXX-S<br>KIT XXXXXXX-C | A14-075 | 18 GA 5 |
|---|---|---|---|---|---|
| ENG | ORDER | GAS SPRING | REPAIR KIT | FLANGE | CHARGING ADAPTER |
| DEU | BESTELLUNG | GASDRUCKFEDER | ERSATZTEILSATZ | FLANSCHE | LADEADAPTER |
| FRA | COMMANDE | RESSORT À GAZ | KIT DE RÉPARATION | BRIDE | RACCORD DE CHARGE |
| ITA | ORDINE | CILINDRO AD AZOTO | KIT DI MANUTENZIONE | FLANGE | ADATTATORE DI CARICO |
| ESP | PEDIDO | RESORTE DE GAS | KIT DE REPARACION | BRIDA | ADAPTADOR DE CARGA |
| POR | PEDIDO | CILINDRO DE GÁS | KIT DE MANUTENÇÃO | FLANGE | ADAPTADOR DE CARGA |

# CT 2500 MOUNTS

Low Profile

AZOL GAS

## A14-075

E24.54.815.G
EM24.54.700/F

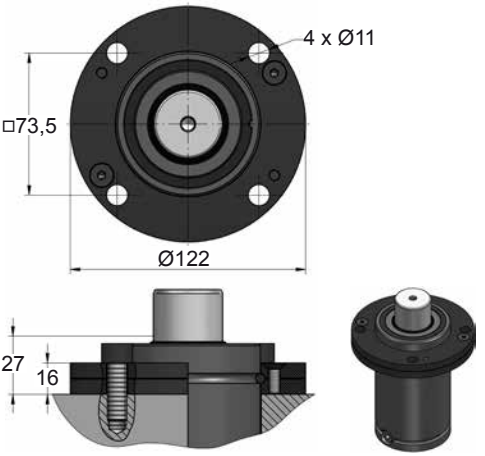


## A34-075

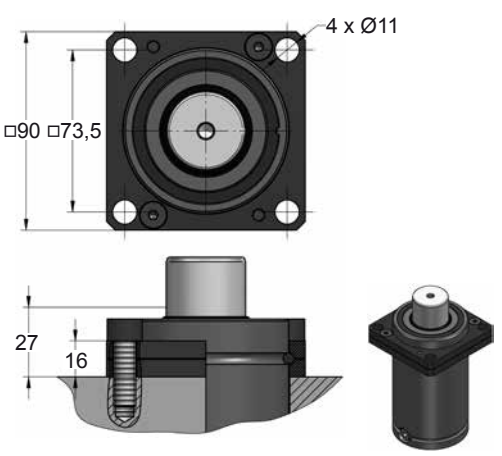


## B36-075

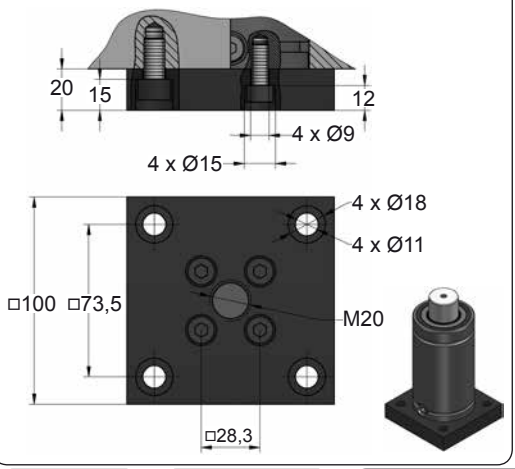


## B41-075

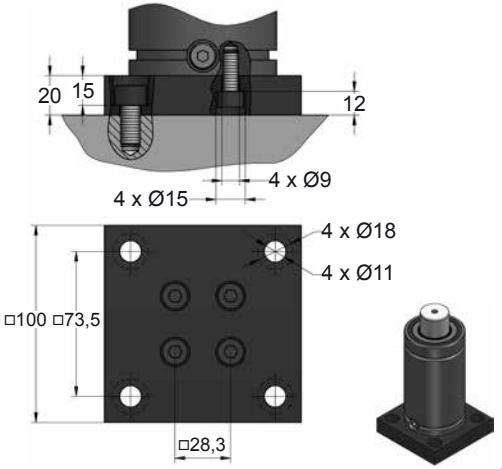









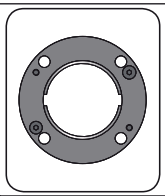

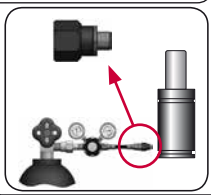

| CODE | | CT 2500 050 | KIT XXXXXXX-S<br>KIT XXXXXXX-C | A14-075 | 06 GA 11 |
|---|---|---|---|---|---|
| ENG | ORDER | GAS SPRING | REPAIR KIT | FLANGE | CHARGING ADAPTER |
| DEU | BESTELLUNG | GASDRUCKFEDER | ERSATZTEILSATZ | FLANSCHE | LADEADAPTER |
| FRA | COMMANDE | RESSORT À GAZ | KIT DE RÉPARATION | BRIDE | RACCORD DE CHARGE |
| ITA | ORDINE | CILINDRO AD AZOTO | KIT DI MANUTENZIONE | FLANGE | ADATTATORE DI CARICO |
| ESP | PEDIDO | RESORTE DE GAS | KIT DE REPARACION | BRIDA | ADAPTADOR DE CARGA |
| POR | PEDIDO | CILINDRO DE GÁS | KIT DE MANUTENÇÃO | FLANGE | ADAPTADOR DE CARGA |

AZOL GAS

# CT 2500 MOUNTS

*Low Profile*

## D02-075

ISO E24.54.815.G EM24.54.700/F

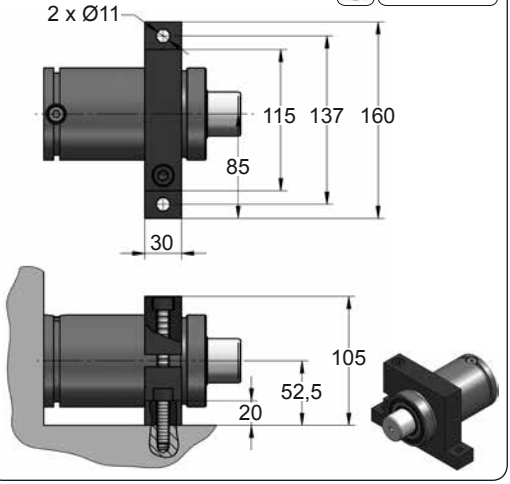


## D67-075

VDI

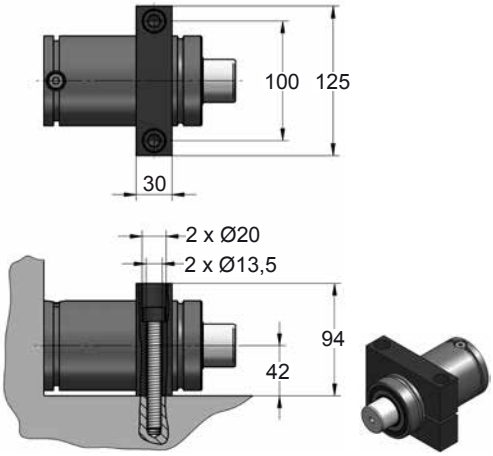









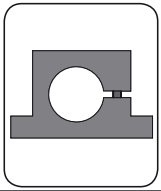

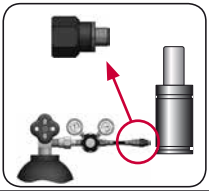

| CODE | | CT 2500 050 | KIT XXXXXXX-S<br>KIT XXXXXXX-C | D02-075 | 06 GA 11 |
|---|---|---|---|---|---|
| ENG | ORDER | GAS SPRING | REPAIR KIT | FLANGE | CHARGING ADAPTER |
| DEU | BESTELLUNG | GASDRUCKFEDER | ERSATZTEILSATZ | FLANSCHE | LADEADAPTER |
| FRA | COMMANDE | RESSORT À GAZ | KIT DE RÉPARATION | BRIDE | RACCORD DE CHARGE |
| ITA | ORDINE | CILINDRO AD AZOTO | KIT DI MANUTENZIONE | FLANGE | ADATTATORE DI CARICO |
| ESP | PEDIDO | RESORTE DE GAS | KIT DE REPARACION | BRIDA | ADAPTADOR DE CARGA |
| POR | PEDIDO | CILINDRO DE GÁS | KIT DE MANUTENÇÃO | FLANGE | ADAPTADOR DE CARGA |

# CT 3000

*Low Profile*

AZOL GAS

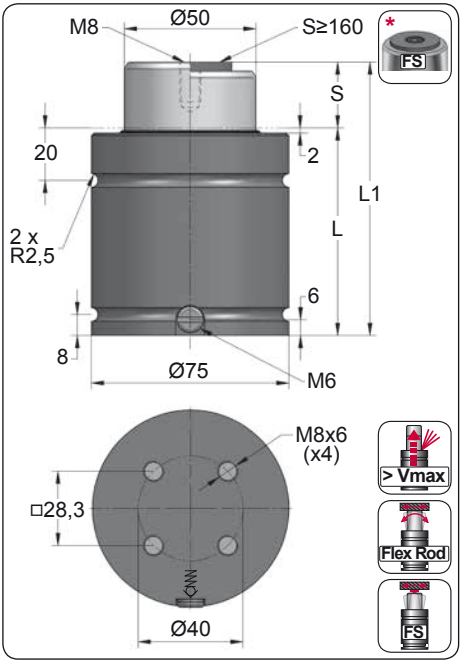


| ORDER | S (mm) | L1 ±0,25 (mm) | L (mm) | Kg. |
|---|---|---|---|---|
| CT 3000 012 | 12 | 78 | 66 | 2.00 |
| CT 3000 025 | 25 | 104 | 79 | 2.15 |
| CT 3000 038 | 38 | 130 | 92 | 2.22 |
| CT 3000 050 | 50 | 154 | 104 | 2.55 |
| CT 3000 063 | 63 | 180 | 117 | 2.75 |
| CT 3000 080 | 80 | 214 | 134 | 3.07 |
| CT 3000 100 | 100 | 254 | 154 | 3.60 |
| CT 3000 125 | 125 | 304 | 179 | 4.30 |
| CT 3000 160 * | 160 | 374 | 214 | 4.97 |
| CT 3000 200 * | 200 | 454 | 254 | 5.00 |

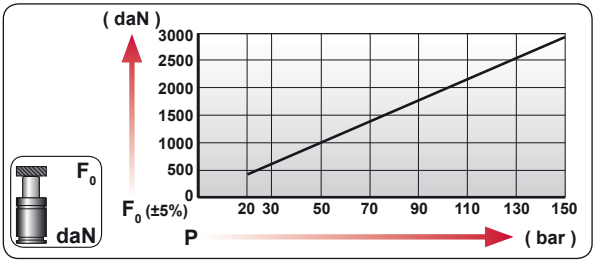


| CODE | bar | psi | $F_0$ daN | $F_1$ daN |
|---|---|---|---|---|
| CT 3000 050 | 150 | 2175 | 2945 | 5640 |
| CT-H 3000 050 | 0 | 0 | --- | --- |

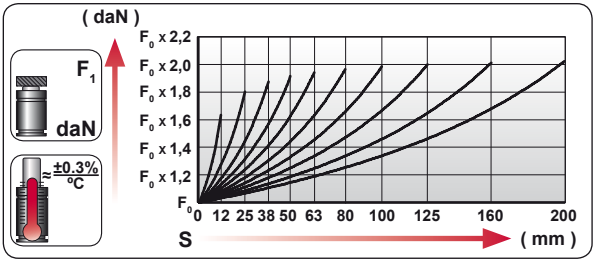


| | |
|---|---|
| ENG | ORDER |
| DEU | BESTELLUNG |
| FRA | COMMANDE |
| ITA | ORDINE |
| ESP | PEDIDO |
| POR | PEDIDO |

$F_0$ daN — S mm

CT 3000 50

CT 3000 050

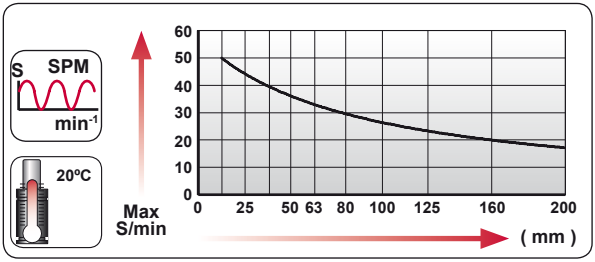


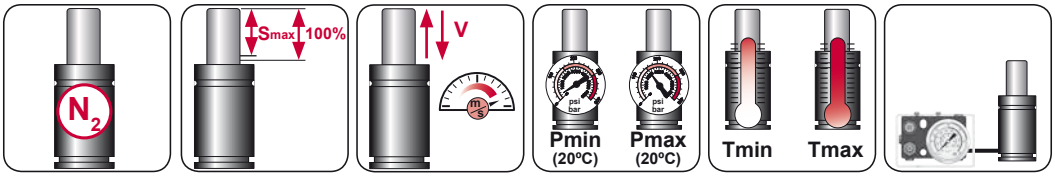


| $N_2$ | Smax < 90% | Vmax 1,6 m/s | bar psi 20 290 | bar psi 150 2175 | °C °F 0 32 | °C °F 80 176 | 600 CP- |
|---|---|---|---|---|---|---|---|

AZOL GAS

# CT 3000

*Low Profile*

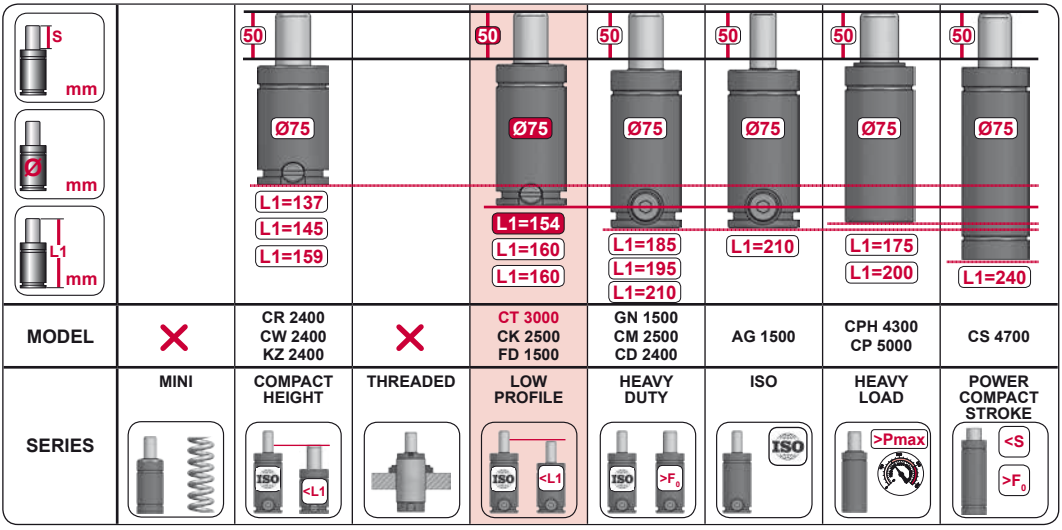


| MODEL | × | CR 2400<br>CW 2400<br>KZ 2400 | × | CT 3000<br>CK 2500<br>FD 1500 | GN 1500<br>CM 2500<br>CD 2400 | AG 1500 | CPH 4300<br>CP 5000 | CS 4700 |
|---|---|---|---|---|---|---|---|---|
| SERIES | MINI | COMPACT HEIGHT | THREADED | LOW PROFILE | HEAVY DUTY | ISO | HEAVY LOAD | POWER COMPACT STROKE |

## CT










## CTN



































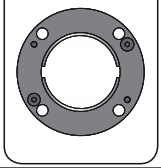

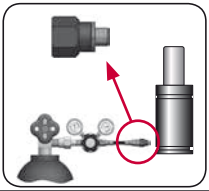

| CODE | | CT 3000 050 | KIT XXXXXXX-S<br>KIT XXXXXXX-C | A14-075 | 06 GA 11 |
|---|---|---|---|---|---|
| ENG | ORDER | GAS SPRING | REPAIR KIT | FLANGE | CHARGING ADAPTER |
| DEU | BESTELLUNG | GASDRUCKFEDER | ERSATZTEILSATZ | FLANSCHE | LADEADAPTER |
| FRA | COMMANDE | RESSORT À GAZ | KIT DE RÉPARATION | BRIDE | RACCORD DE CHARGE |
| ITA | ORDINE | CILINDRO AD AZOTO | KIT DI MANUTENZIONE | FLANGE | ADATTATORE DI CARICO |
| ESP | PEDIDO | RESORTE DE GAS | KIT DE REPARACION | BRIDA | ADAPTADOR DE CARGA |
| POR | PEDIDO | CILINDRO DE GÁS | KIT DE MANUTENÇÃO | FLANGE | ADAPTADOR DE CARGA |

# CTC 3000

*Low Profile*

AZOL GAS

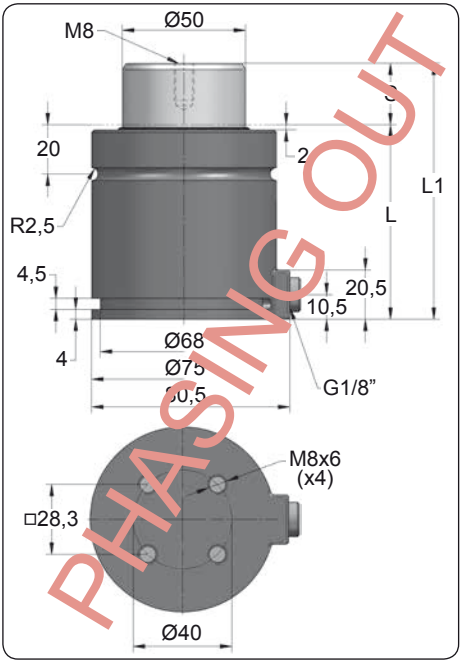


PHASING OUT

| ORDER | S (mm) | L1 ±0,25 (mm) | L (mm) | Kg. |
|---|---|---|---|---|
| CTC 3000 012 | 12 | 78 | 66 | 2.11 |
| CTC 3000 025 | 25 | 104 | 79 | 2.26 |
| CTC 3000 038 | 38 | 130 | 92 | 2.34 |
| CTC 3000 050 | 50 | 154 | 104 | 2.68 |
| CTC 3000 063 | 63 | 180 | 117 | 2.90 |
| CTC 3000 080 | 80 | 214 | 134 | 3.23 |
| CTC 3000 100 | 100 | 254 | 154 | 3.79 |
| CTC 3000 125 | 125 | 304 | 179 | 4.52 |
| CTC 3000 160 | 160 | 374 | 214 | 5.23 |
| CTC 3000 200 | 200 | 454 | 254 | 5.26 |

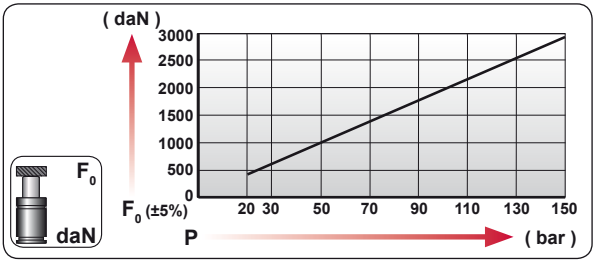


| CODE | bar | psi | F0 daN | F1 daN |
|---|---|---|---|---|
| --------- | --- | --- | --- | --- |
| CTC 3000 050 | 0 | 0 | --- | --- |

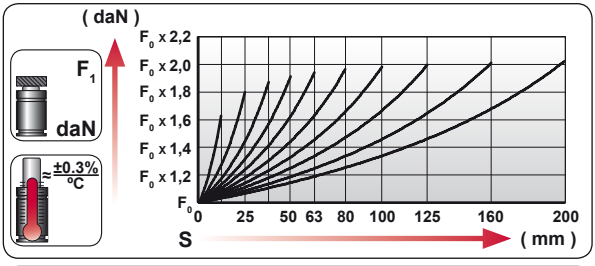


| | |
|---|---|
| ENG | ORDER |
| DEU | BESTELLUNG |
| FRA | COMMANDE |
| ITA | ORDINE |
| ESP | PEDIDO |
| POR | PEDIDO |

F0 daN — S mm

CTC 3000 50

CTC 3000 050

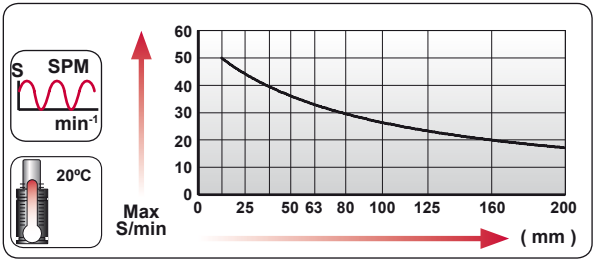


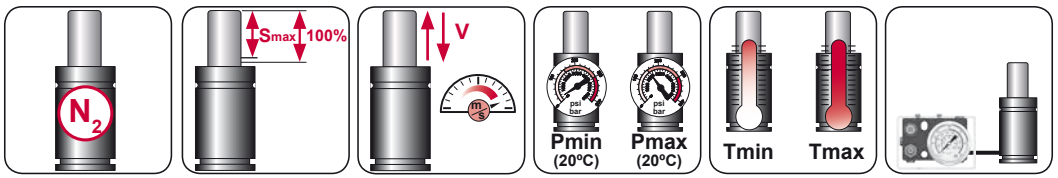


| $N_2$ | Smax < 90% | Vmax 1,6 m/s | bar psi 20 290 | bar psi 150 2175 | ºC ºF 0 32 | ºC ºF 80 176 | 600 CP- |
|---|---|---|---|---|---|---|---|

AZOL GAS

# CTC 3000 MOUNTS

*Low Profile*

## C55-075

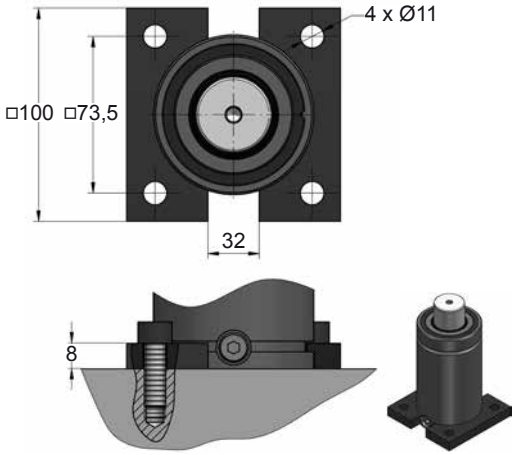




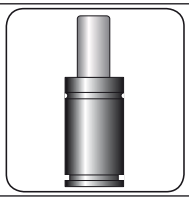




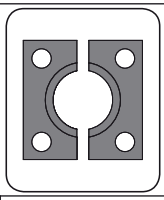

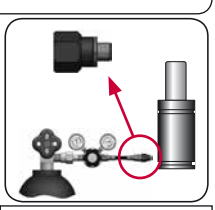

| CODE | | CTC 3000 050 | KIT XXXXXXX-S<br>KIT XXXXXXX-C | C55-075 | SKK 12R 1/8 |
|---|---|---|---|---|---|
| ENG | ORDER | GAS SPRING | REPAIR KIT | FLANGE | CHARGING ADAPTER |
| DEU | BESTELLUNG | GASDRUCKFEDER | ERSATZTEILSATZ | FLANSCHE | LADEADAPTER |
| FRA | COMMANDE | RESSORT À GAZ | KIT DE RÉPARATION | BRIDE | RACCORD DE CHARGE |
| ITA | ORDINE | CILINDRO AD AZOTO | KIT DI MANUTENZIONE | FLANGE | ADATTATORE DI CARICO |
| ESP | PEDIDO | RESORTE DE GAS | KIT DE REPARACION | BRIDA | ADAPTADOR DE CARGA |
| POR | PEDIDO | CILINDRO DE GÁS | KIT DE MANUTENÇÃO | FLANGE | ADAPTADOR DE CARGA |

# CTN 3000

*Low Profile*

AZOL GAS

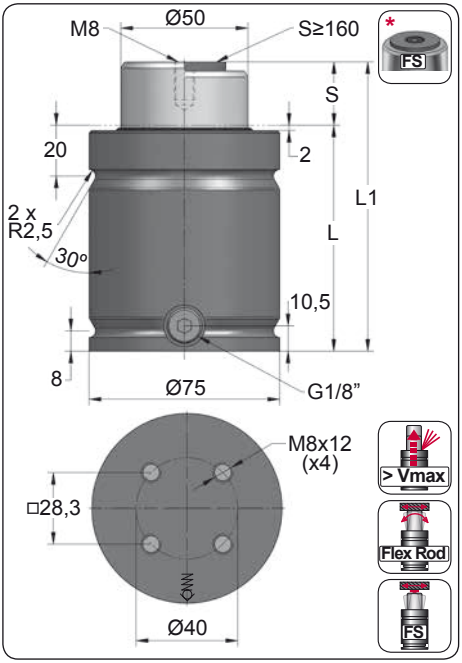


| ORDER | S (mm) | L1 ±0,25 (mm) | L (mm) | Kg. |
|---|---|---|---|---|
| CTN 3000 012 | 12 | 88 | 76 | 2.08 |
| CTN 3000 025 | 25 | 114 | 89 | 2.34 |
| CTN 3000 038 | 38 | 140 | 102 | 2.60 |
| CTN 3000 050 | 50 | 164 | 114 | 2.84 |
| CTN 3000 063 | 63 | 190 | 127 | 3.11 |
| CTN 3000 080 | 80 | 224 | 144 | 3.45 |
| CTN 3000 100 | 100 | 264 | 164 | 3.85 |
| CTN 3000 125 | 125 | 314 | 189 | 4.36 |
| CTN 3000 160 * | 160 | 384 | 224 | 5.07 |
| CTN 3000 200 * | 200 | 464 | 264 | 5.87 |

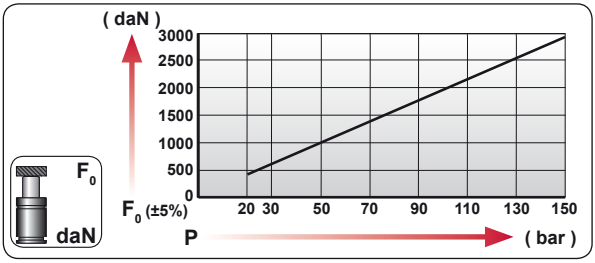


| CODE | bar | psi | F0 daN | F1 daN |
|---|---|---|---|---|
| CTN 3000 050 | 150 | 2175 | 2945 | 5645 |
| CTN-H 3000 050 | 0 | 0 | --- | --- |

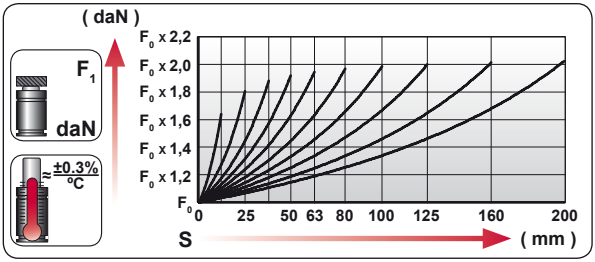


| | |
|---|---|
| ENG | ORDER |
| DEU | BESTELLUNG |
| FRA | COMMANDE |
| ITA | ORDINE |
| ESP | PEDIDO |
| POR | PEDIDO |

F0 daN — S mm

CTN 3000 50

CTN 3000 050

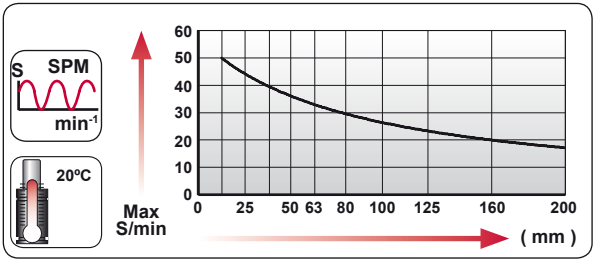


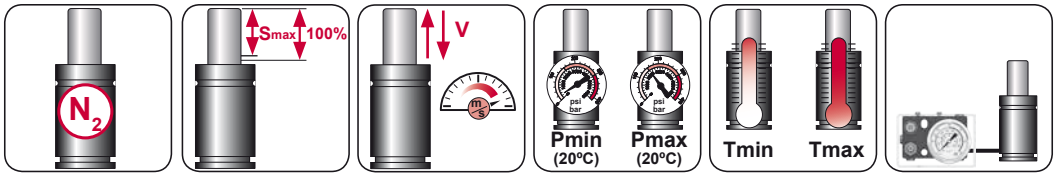


| $N_2$ | Smax < 90% | Vmax 1,6 m/s | bar psi 20 290 | bar psi 150 2175 | °C °F 0 32 | °C °F 80 176 | 600 CP- |
|---|---|---|---|---|---|---|---|

AZOL GAS

# CTN 3000

*Low Profile*




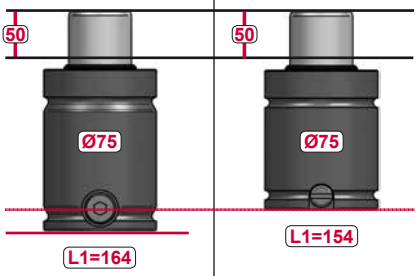


| MODEL | CTN 3000 | CT 3000 |
|---|---|---|

## CT

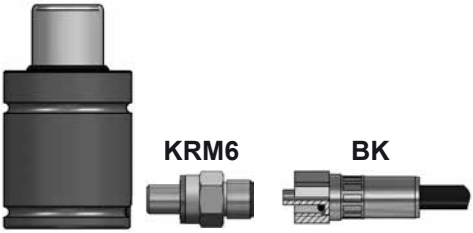


## CTN

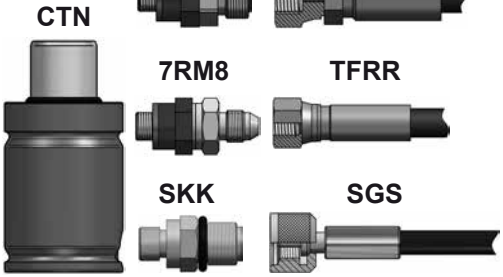









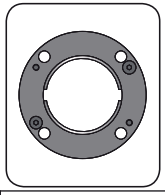

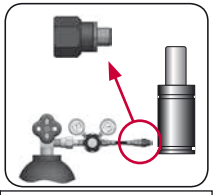

| CODE | | CTN 3000 050 | KIT XXXXXXX-S<br>KIT XXXXXXX-C | A14-075 | 18 GA 5 |
|---|---|---|---|---|---|
| ENG | ORDER | GAS SPRING | REPAIR KIT | FLANGE | CHARGING ADAPTER |
| DEU | BESTELLUNG | GASDRUCKFEDER | ERSATZTEILSATZ | FLANSCHE | LADEADAPTER |
| FRA | COMMANDE | RESSORT À GAZ | KIT DE RÉPARATION | BRIDE | RACCORD DE CHARGE |
| ITA | ORDINE | CILINDRO AD AZOTO | KIT DI MANUTENZIONE | FLANGE | ADATTATORE DI CARICO |
| ESP | PEDIDO | RESORTE DE GAS | KIT DE REPARACION | BRIDA | ADAPTADOR DE CARGA |
| POR | PEDIDO | CILINDRO DE GÁS | KIT DE MANUTENÇÃO | FLANGE | ADAPTADOR DE CARGA |

# CT 3000 MOUNTS

*Low Profile*

AZOL GAS

## A14-075

ISO E24.54.815.G EM24.54.700/F

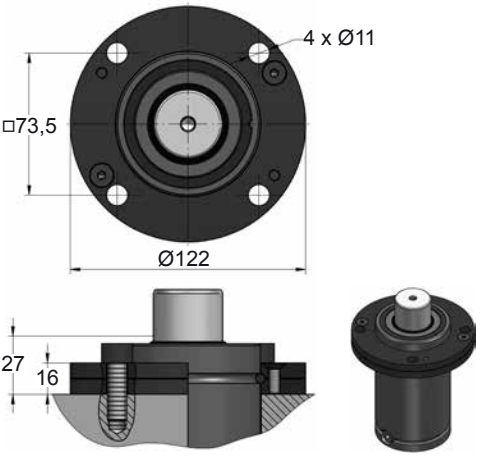


## A34-075

ISO VDI

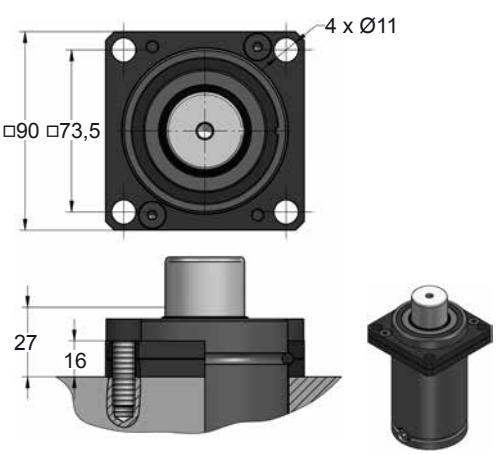


## B36-075

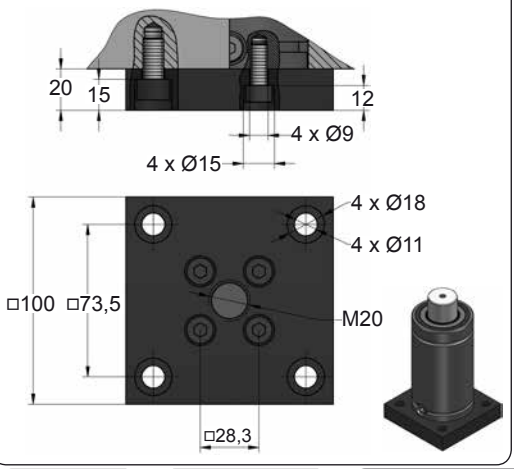


## B41-075

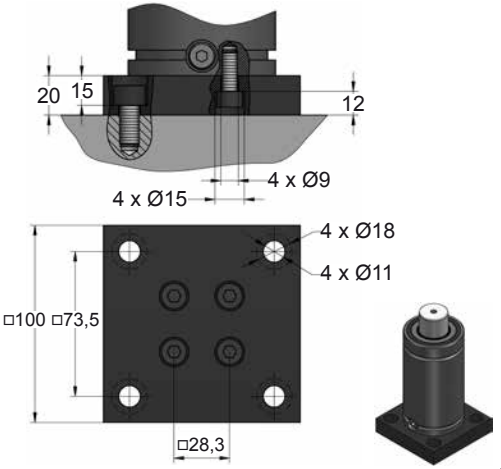









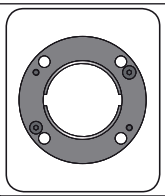

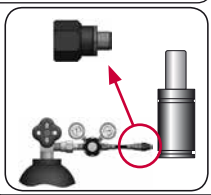

| CODE | | CT 3000 050 | KIT XXXXXXX-S<br>KIT XXXXXXX-C | A14-075 | 06 GA 11 |
|---|---|---|---|---|---|
| ENG | ORDER | GAS SPRING | REPAIR KIT | FLANGE | CHARGING ADAPTER |
| DEU | BESTELLUNG | GASDRUCKFEDER | ERSATZTEILSATZ | FLANSCHE | LADEADAPTER |
| FRA | COMMANDE | RESSORT À GAZ | KIT DE RÉPARATION | BRIDE | RACCORD DE CHARGE |
| ITA | ORDINE | CILINDRO AD AZOTO | KIT DI MANUTENZIONE | FLANGE | ADATTATORE DI CARICO |
| ESP | PEDIDO | RESORTE DE GAS | KIT DE REPARACION | BRIDA | ADAPTADOR DE CARGA |
| POR | PEDIDO | CILINDRO DE GÁS | KIT DE MANUTENÇÃO | FLANGE | ADAPTADOR DE CARGA |

AZOL GAS

# CT 3000 MOUNTS

*Low Profile*

## D02-075

ISO E24.54.815.G EM24.54.700/F

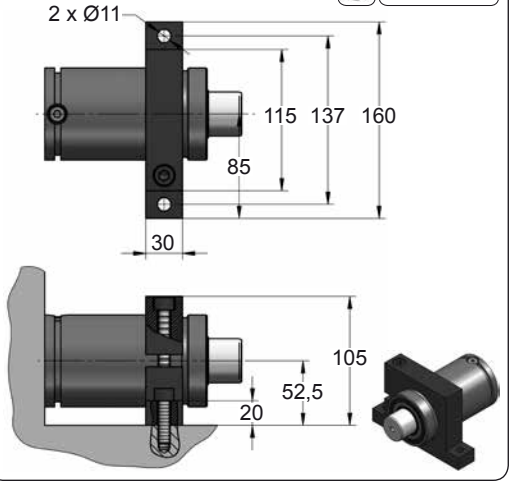


## D67-075

VDI

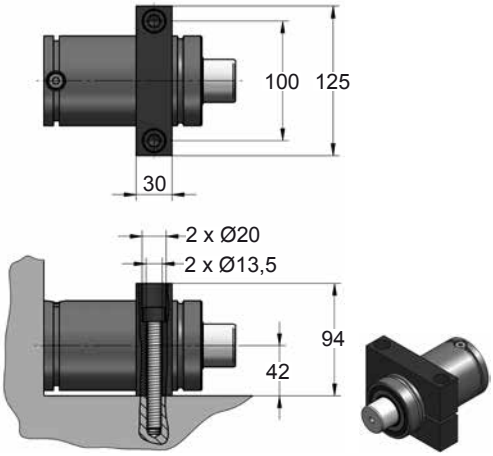









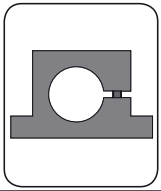

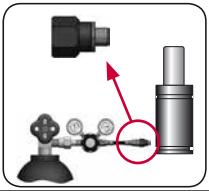

| CODE | | CT 3000 050 | KIT XXXXXXX-S<br>KIT XXXXXXX-C | D02-075 | 06 GA 11 |
|---|---|---|---|---|---|
| ENG | ORDER | GAS SPRING | REPAIR KIT | FLANGE | CHARGING ADAPTER |
| DEU | BESTELLUNG | GASDRUCKFEDER | ERSATZTEILSATZ | FLANSCHE | LADEADAPTER |
| FRA | COMMANDE | RESSORT À GAZ | KIT DE RÉPARATION | BRIDE | RACCORD DE CHARGE |
| ITA | ORDINE | CILINDRO AD AZOTO | KIT DI MANUTENZIONE | FLANGE | ADATTATORE DI CARICO |
| ESP | PEDIDO | RESORTE DE GAS | KIT DE REPARACION | BRIDA | ADAPTADOR DE CARGA |
| POR | PEDIDO | CILINDRO DE GÁS | KIT DE MANUTENÇÃO | FLANGE | ADAPTADOR DE CARGA |

# CT 5000

*Low Profile*

AZOL GAS

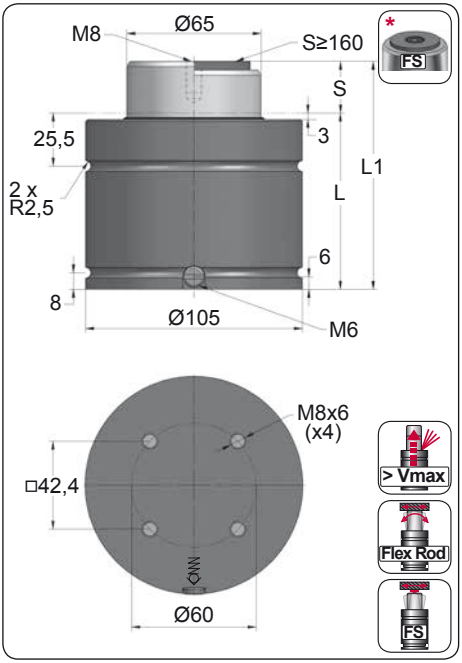


| ORDER | S (mm) | L1 ±0,25 (mm) | L (mm) | Kg. |
|---|---|---|---|---|
| CT 5000 012 | 12 | 84 | 72 | 3.68 |
| CT 5000 025 | 25 | 110 | 85 | 4.16 |
| CT 5000 038 | 38 | 136 | 98 | 4.64 |
| CT 5000 050 | 50 | 160 | 110 | 5.18 |
| CT 5000 063 | 63 | 186 | 123 | 5.56 |
| CT 5000 080 | 80 | 220 | 140 | 6.17 |
| CT 5000 100 | 100 | 260 | 160 | 7.01 |
| CT 5000 125 | 125 | 310 | 185 | 7.80 |
| CT 5000 160 * | 160 | 380 | 220 | 9.52 |
| CT 5000 200 * | 200 | 460 | 260 | 10.09 |

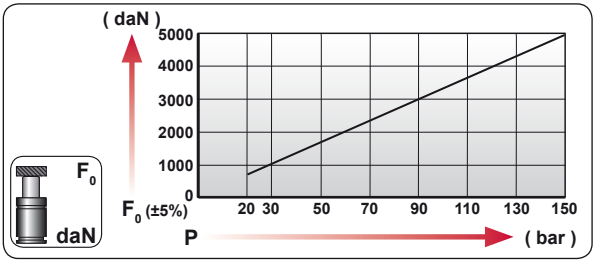


| CODE | bar | psi | $F_0$ daN | $F_1$ daN |
|---|---|---|---|---|
| CT 5000 050 | 150 | 2175 | 4980 | 8750 |
| CT-H 5000 050 | 0 | 0 | --- | --- |

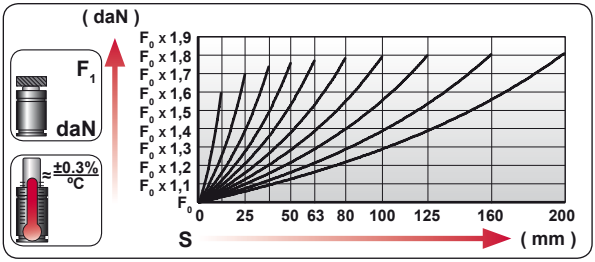


| ENG | ORDER |
|---|---|
| DEU | BESTELLUNG |
| FRA | COMMANDE |
| ITA | ORDINE |
| ESP | PEDIDO |
| POR | PEDIDO |

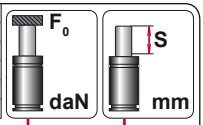


CT 5000 50

CT 5000 050

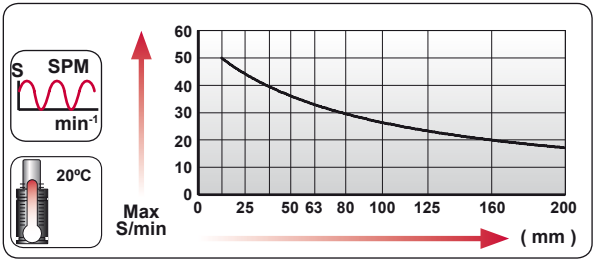


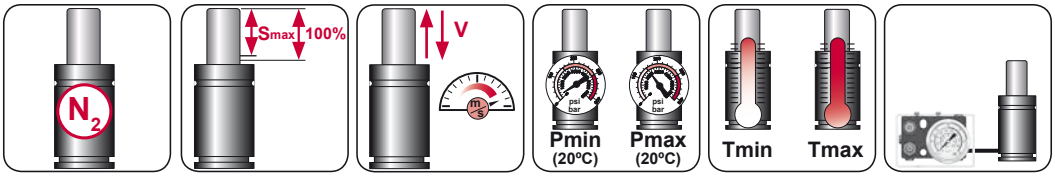


| $N_2$ | Smax < 90% | Vmax 1,6 m/s | bar psi 20 290 | bar psi 150 2175 | °C °F 0 32 | °C °F 80 176 | 600 CP- |
|---|---|---|---|---|---|---|---|

AZOL GAS

# CT 5000

*Low Profile*

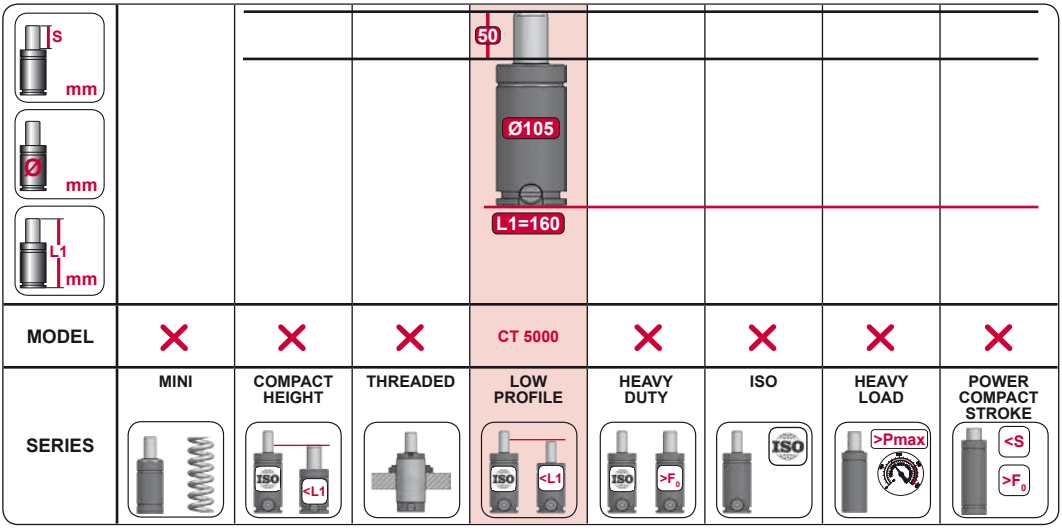


| MODEL | | | | | | | | |
|---|---|---|---|---|---|---|---|---|
| | ✕ | ✕ | ✕ | CT 5000 | ✕ | ✕ | ✕ | ✕ |
| SERIES | MINI | COMPACT HEIGHT | THREADED | LOW PROFILE | HEAVY DUTY | ISO | HEAVY LOAD | POWER COMPACT STROKE |

## CT

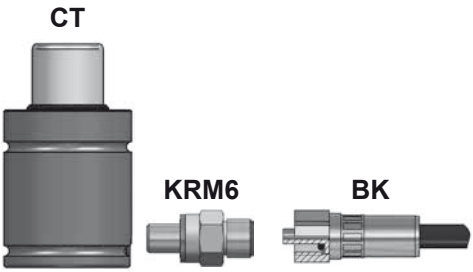


## CTN

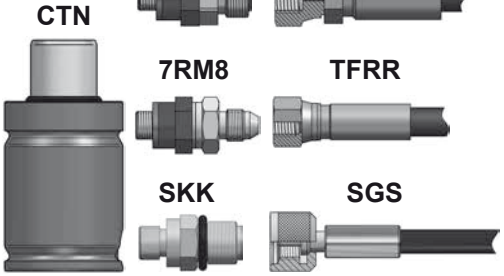









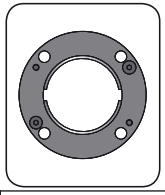

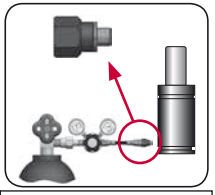

| CODE | | CT 5000 050 | KIT XXXXXXX-S<br>KIT XXXXXXX-C | A14-105 | 06 GA 11 |
|---|---|---|---|---|---|
| ENG | ORDER | GAS SPRING | REPAIR KIT | FLANGE | CHARGING ADAPTER |
| DEU | BESTELLUNG | GASDRUCKFEDER | ERSATZTEILSATZ | FLANSCHE | LADEADAPTER |
| FRA | COMMANDE | RESSORT À GAZ | KIT DE RÉPARATION | BRIDE | RACCORD DE CHARGE |
| ITA | ORDINE | CILINDRO AD AZOTO | KIT DI MANUTENZIONE | FLANGE | ADATTATORE DI CARICO |
| ESP | PEDIDO | RESORTE DE GAS | KIT DE REPARACION | BRIDA | ADAPTADOR DE CARGA |
| POR | PEDIDO | CILINDRO DE GÁS | KIT DE MANUTENÇÃO | FLANGE | ADAPTADOR DE CARGA |

# CTC 5000

*Low Profile*

AZOL GAS

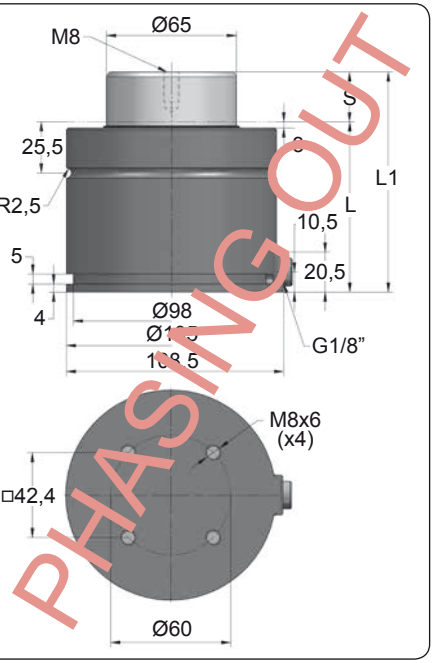


PHASING OUT

| ORDER | S (mm) | L1 ±0,25 (mm) | L (mm) | Kg. |
|---|---|---|---|---|
| CTC 5000 012 | 12 | 84 | 72 | 3.87 |
| CTC 5000 025 | 25 | 110 | 85 | 4.38 |
| CTC 5000 038 | 38 | 136 | 98 | 4.88 |
| CTC 5000 050 | 50 | 160 | 110 | 5.45 |
| CTC 5000 063 | 63 | 186 | 123 | 5.85 |
| CTC 5000 080 | 80 | 220 | 140 | 6.50 |
| CTC 5000 100 | 100 | 260 | 160 | 7.38 |
| CTC 5000 125 | 125 | 310 | 185 | 8.21 |
| CTC 5000 160 | 160 | 380 | 220 | 10.02 |
| CTC 5000 200 | 200 | 460 | 260 | 10.62 |

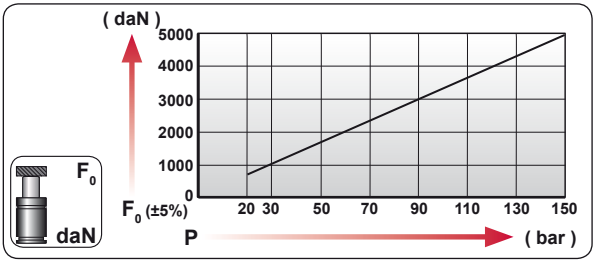


| CODE | | bar | psi | F0 daN | F1 daN |
|---|---|---|---|---|---|
| --------- | | --- | --- | --- | --- |
| CTC 5000 050 | | 0 | 0 | --- | --- |

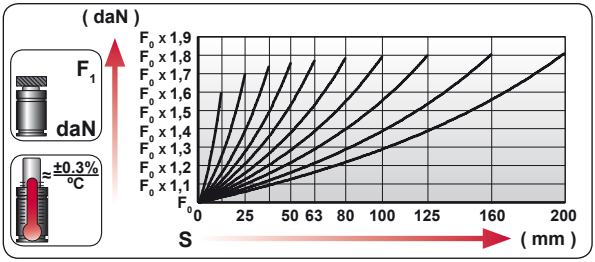


| ENG | ORDER |
|---|---|
| DEU | BESTELLUNG |
| FRA | COMMANDE |
| ITA | ORDINE |
| ESP | PEDIDO |
| POR | PEDIDO |

F0 daN — S mm

CTC 5000 50

CTC 5000 050

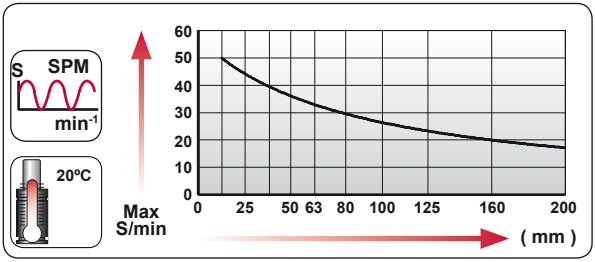


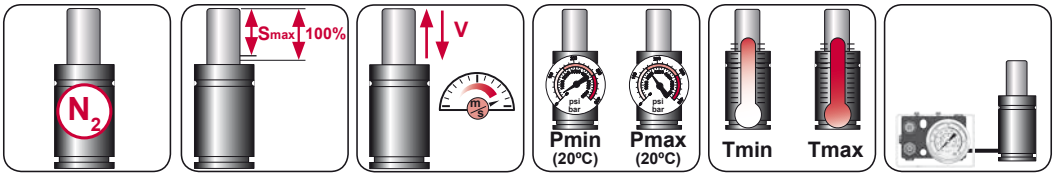


| $N_2$ | Smax < 90% | Vmax 1,6 m/s | bar psi 20 290 | bar psi 150 2175 | °C °F 0 32 | °C °F 80 176 | 600 CP- |
|---|---|---|---|---|---|---|---|

AZOL GAS

# CTC 5000 MOUNTS

*Low Profile*

## C55-105

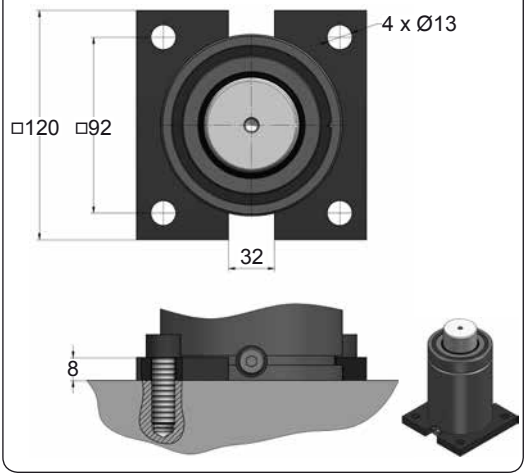









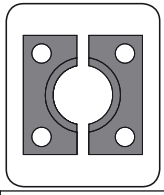

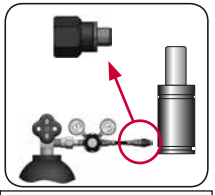

| CODE | | CTC 5000 050 | KIT XXXXXXX-S<br>KIT XXXXXXX-C | C55-105 | SKK 12R 1/8 |
|---|---|---|---|---|---|
| ENG | ORDER | GAS SPRING | REPAIR KIT | FLANGE | CHARGING ADAPTER |
| DEU | BESTELLUNG | GASDRUCKFEDER | ERSATZTEILSATZ | FLANSCHE | LADEADAPTER |
| FRA | COMMANDE | RESSORT À GAZ | KIT DE RÉPARATION | BRIDE | RACCORD DE CHARGE |
| ITA | ORDINE | CILINDRO AD AZOTO | KIT DI MANUTENZIONE | FLANGE | ADATTATORE DI CARICO |
| ESP | PEDIDO | RESORTE DE GAS | KIT DE REPARACION | BRIDA | ADAPTADOR DE CARGA |
| POR | PEDIDO | CILINDRO DE GÁS | KIT DE MANUTENÇÃO | FLANGE | ADAPTADOR DE CARGA |

# CTN 5000

*Low Profile*

AZOL GAS

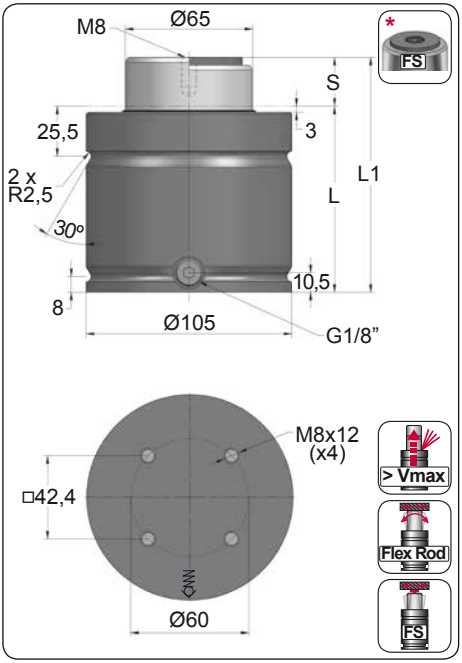


| ORDER | S (mm) | L1 ±0,25 (mm) | L (mm) | Kg. |
|---|---|---|---|---|
| CTN 5000 012 | 12 | 94 | 82 | 4.38 |
| CTN 5000 025 | 25 | 120 | 95 | 4.85 |
| CTN 5000 038 | 38 | 146 | 108 | 5.33 |
| CTN 5000 050 | 50 | 170 | 120 | 5.76 |
| CTN 5000 063 | 63 | 196 | 133 | 6.24 |
| CTN 5000 080 | 80 | 230 | 150 | 6.86 |
| CTN 5000 100 | 100 | 270 | 170 | 7.59 |
| CTN 5000 125 | 125 | 320 | 195 | 8.50 |
| CTN 5000 160 * | 160 | 390 | 230 | 9.78 |
| CTN 5000 200 * | 200 | 470 | 270 | 11.24 |

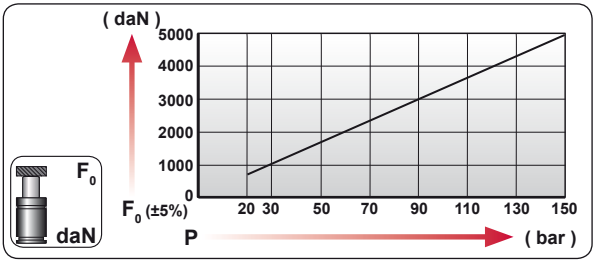


| CODE | bar | psi | F0 daN | F1 daN |
|---|---|---|---|---|
| --------- | --- | --- | --- | --- |
| CTN 5000 050 | 150 | 2175 | 4980 | 8750 |

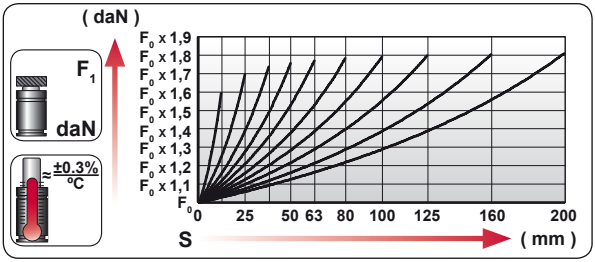


| ENG | ORDER |
|---|---|
| DEU | BESTELLUNG |
| FRA | COMMANDE |
| ITA | ORDINE |
| ESP | PEDIDO |
| POR | PEDIDO |

F0 daN — S mm

CTN 5000 50

CTN 5000 050

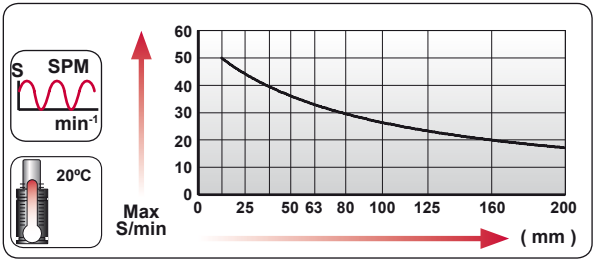


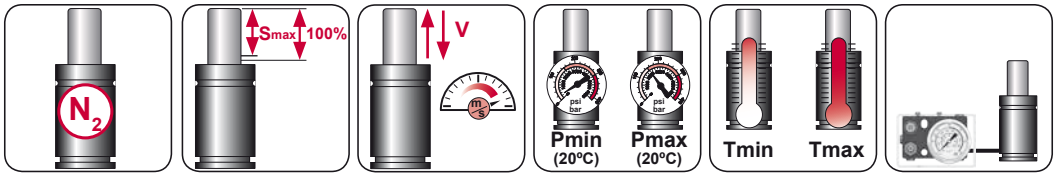


| $N_2$ | Smax < 90% | Vmax 1,6 m/s | bar psi 20 290 | bar psi 150 2175 | ºC ºF 0 32 | ºC ºF 80 176 | 600 CP- |
|---|---|---|---|---|---|---|---|

AZOL GAS

# CTN 5000

*Low Profile*




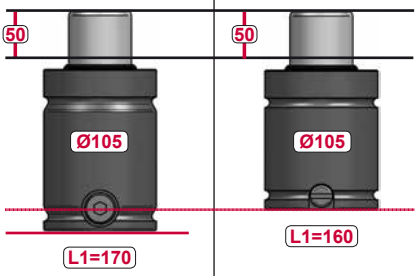


| MODEL | CTN 5000 | CT 5000 |
|---|---|---|

## CT










## CTN



































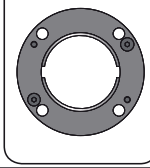

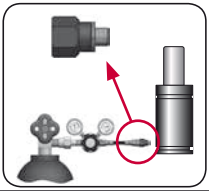

| CODE | | CTN 5000 050 | KIT XXXXXXX-S<br>KIT XXXXXXX-C | A14-105 | 18 GA 5 |
|---|---|---|---|---|---|
| ENG | ORDER | GAS SPRING | REPAIR KIT | FLANGE | CHARGING ADAPTER |
| DEU | BESTELLUNG | GASDRUCKFEDER | ERSATZTEILSATZ | FLANSCHE | LADEADAPTER |
| FRA | COMMANDE | RESSORT À GAZ | KIT DE RÉPARATION | BRIDE | RACCORD DE CHARGE |
| ITA | ORDINE | CILINDRO AD AZOTO | KIT DI MANUTENZIONE | FLANGE | ADATTATORE DI CARICO |
| ESP | PEDIDO | RESORTE DE GAS | KIT DE REPARACION | BRIDA | ADAPTADOR DE CARGA |
| POR | PEDIDO | CILINDRO DE GÁS | KIT DE MANUTENÇÃO | FLANGE | ADAPTADOR DE CARGA |

# CT 5000 MOUNTS

*Low Profile*

AZOL GAS

## A14-105

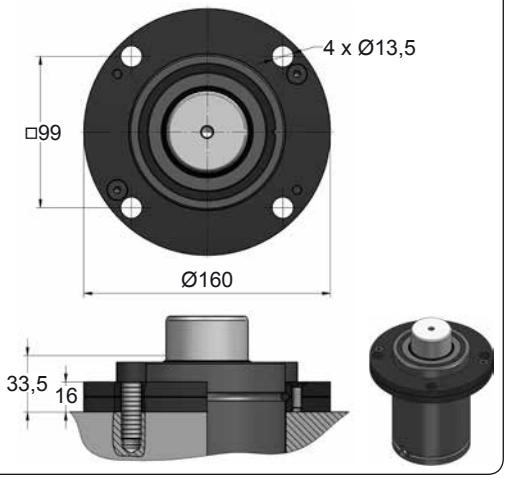


## B36-105

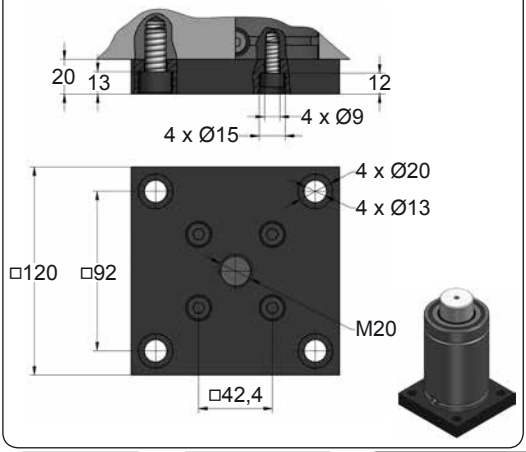


## B41-105

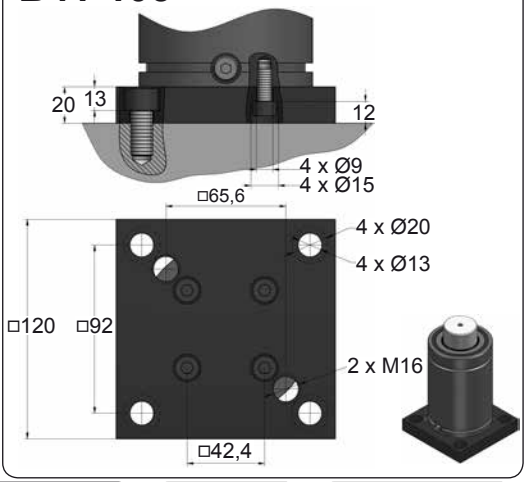









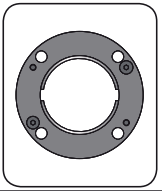

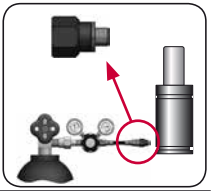

| CODE | | CT 5000 050 | KIT XXXXXXX-S<br>KIT XXXXXXX-C | A14-105 | 06 GA 11 |
|---|---|---|---|---|---|
| ENG | ORDER | GAS SPRING | REPAIR KIT | FLANGE | CHARGING ADAPTER |
| DEU | BESTELLUNG | GASDRUCKFEDER | ERSATZTEILSATZ | FLANSCHE | LADEADAPTER |
| FRA | COMMANDE | RESSORT À GAZ | KIT DE RÉPARATION | BRIDE | RACCORD DE CHARGE |
| ITA | ORDINE | CILINDRO AD AZOTO | KIT DI MANUTENZIONE | FLANGE | ADATTATORE DI CARICO |
| ESP | PEDIDO | RESORTE DE GAS | KIT DE REPARACION | BRIDA | ADAPTADOR DE CARGA |
| POR | PEDIDO | CILINDRO DE GÁS | KIT DE MANUTENÇÃO | FLANGE | ADAPTADOR DE CARGA |

AZOL GAS

# CT 5000 MOUNTS

*Low Profile*








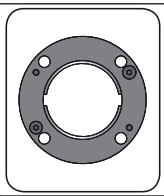

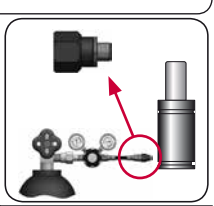

| CODE | | CT 5000 050 | KIT XXXXXXX-S<br>KIT XXXXXXX-C | A14-105 | 06 GA 11 |
|---|---|---|---|---|---|
| ENG | ORDER | GAS SPRING | REPAIR KIT | FLANGE | CHARGING ADAPTER |
| DEU | BESTELLUNG | GASDRUCKFEDER | ERSATZTEILSATZ | FLANSCHE | LADEADAPTER |
| FRA | COMMANDE | RESSORT À GAZ | KIT DE RÉPARATION | BRIDE | RACCORD DE CHARGE |
| ITA | ORDINE | CILINDRO AD AZOTO | KIT DI MANUTENZIONE | FLANGE | ADATTATORE DI CARICO |
| ESP | PEDIDO | RESORTE DE GAS | KIT DE REPARACION | BRIDA | ADAPTADOR DE CARGA |
| POR | PEDIDO | CILINDRO DE GÁS | KIT DE MANUTENÇÃO | FLANGE | ADAPTADOR DE CARGA |

AZOL GAS

# CZ COMPACT HEIGHT LARGE

| MODEL | $F_0$ | Ø | S | L1 | Pmax | Charge Port | | |
|---|---|---|---|---|---|---|---|---|
| CZ 1000 V1 | 1000 | Ø50 | 13 - 125 | 78 - 302 | 150 | G1/8" | ✓ | ✓ |
| CZ 2400 V1 | 2400 | Ø75 | 16 - 125 | 91 - 309 | 150 | G1/8" | ✓ | ✓ |
| CZ 4200 V1 | 4200 | Ø95 | 16 - 125 | 94 - 312 | 150 | G1/8" | ✓ | ✓ |
| CZ 6600 | 6600 | Ø120 | 16 - 125 | 104 - 322 | 150 | G1/8" | ✓ | ✓ |
| CZ 9500 | 9500 | Ø150 | 16 - 125 | 110 - 328 | 150 | G1/8" | ✓ | ✓ |

| S mm | Ø mm | L1 mm | | | | | | | | |
|---|---|---|---|---|---|---|---|---|---|---|
| | | | 50 | 50 | 50 | 50 | 50 | 50 | 50 | |
| | | | Ø50 | Ø50 | Ø50 | Ø50 | Ø50 | Ø50 | Ø50 | |
| | | | L1=131<br>L1=138<br>L1=152 | L1=138 | L1=138<br>L1=150<br>L1=150 | L1=170<br>L1=185<br>L1=195 | L1=195 | L1=165<br>L1=190 | L1=220 | |
| $F_0$ daN | | | 1000<br>1000<br>1000 | 1000 | 1000<br>1000<br>750 | 750<br>1000<br>1000 | 750 | 1700<br>2000 | 1800 | |
| MODEL | ✕ | | CR 1000<br>CW 1000<br>CZ 1000 | AS 1000 | CT 1000<br>CK 1000<br>FD 750 | GN 750<br>CM 1000<br>CD 1000 | AG 750 | CPH 1700<br>CP 2000 | CS 1800 | |
| SERIES | MINI | | COMPACT HEIGHT | THREADED | LOW PROFILE | HEAVY DUTY | ISO | HEAVY LOAD | POWER COMPACT STROKE | |

# CZ 1000

*Compact Height*

AZOL GAS

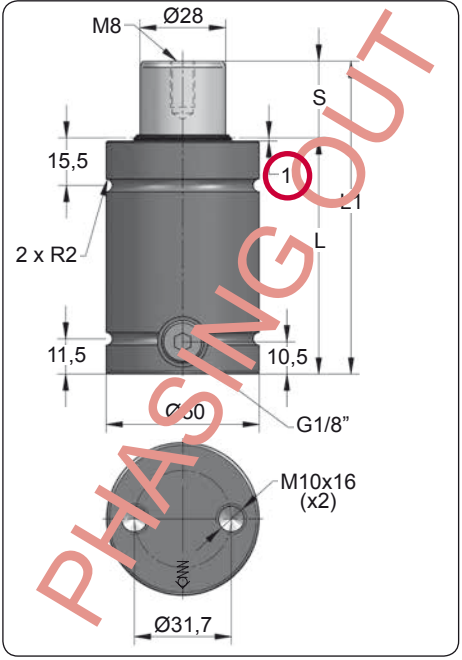


PHASING OUT

| ORDER | S (mm) | L1 ±0,25 (mm) | L (mm) | Kg. |
|---|---|---|---|---|
| CZ 1000 013 | 13 | 78 | 65 | 0.81 |
| CZ 1000 016 | 16 | 84 | 68 | 0.84 |
| CZ 1000 019 | 19 | 90 | 71 | 0.86 |
| CZ 1000 025 | 25 | 102 | 77 | 0.92 |
| CZ 1000 032 | 32 | 116 | 84 | 0.99 |
| CZ 1000 038 | 38 | 128 | 90 | 1.04 |
| CZ 1000 050 | 50 | 152 | 102 | 1.16 |
| CZ 1000 063 | 63 | 178 | 115 | 1.28 |
| CZ 1000 075 | 75 | 202 | 127 | 1.40 |
| CZ 1000 080 | 80 | 212 | 132 | 1.44 |
| CZ 1000 100 | 100 | 252 | 152 | 1.63 |
| CZ 1000 125 | 125 | 302 | 177 | 1.87 |

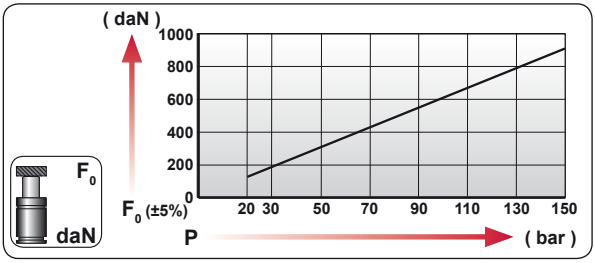


| CODE | bar | psi | F0 daN | F1 daN |
|---|---|---|---|---|
| CZ 1000 050 | 150 | 2175 | 920 | 1630 |
| CZ-H 1000 050 | 0 | 0 | --- | --- |

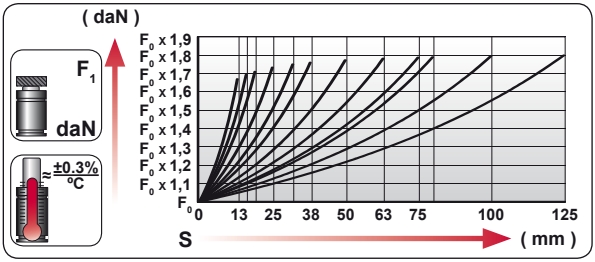


| | |
|---|---|
| ENG | ORDER |
| DEU | BESTELLUNG |
| FRA | COMMANDE |
| ITA | ORDINE |
| ESP | PEDIDO |
| POR | PEDIDO |

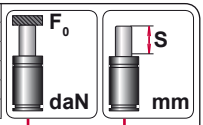


CZ 1000 50

CZ 1000 050

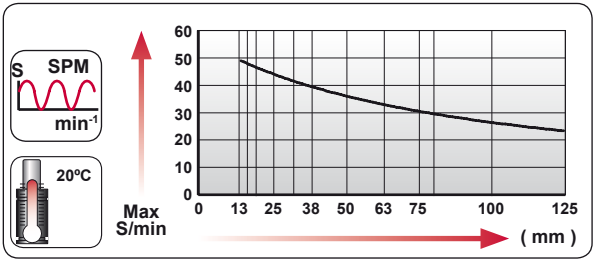


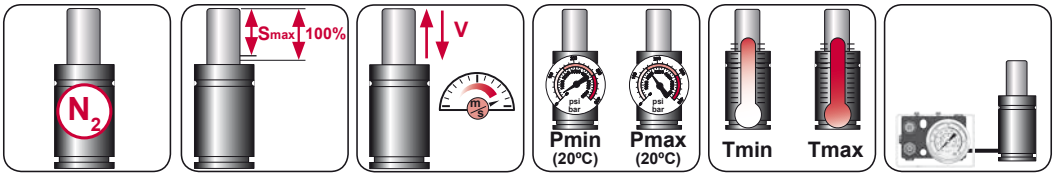


| $N_2$ | Smax < 90% | Vmax 1,6 m/s | bar psi 20 290 | bar psi 150 2175 | °C °F 0 32 | °C °F 80 176 | 600 CP- |
|---|---|---|---|---|---|---|---|

AZOL GAS

# CZ 1000

*Compact Height*

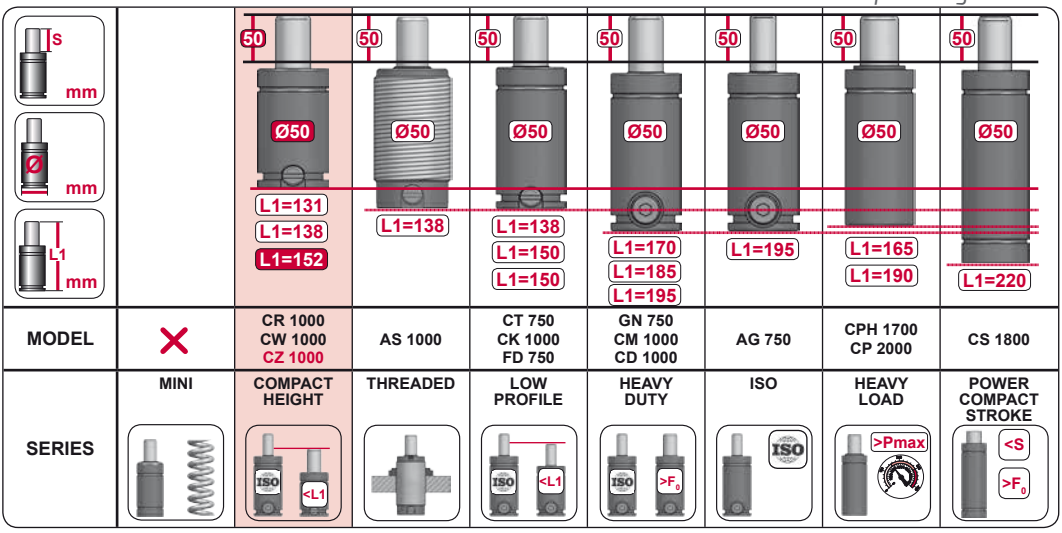


| MODEL | | CR 1000<br>CW 1000<br>CZ 1000 | AS 1000 | CT 750<br>CK 1000<br>FD 750 | GN 750<br>CM 1000<br>CD 1000 | AG 750 | CPH 1700<br>CP 2000 | CS 1800 |
|---|---|---|---|---|---|---|---|---|
| SERIES | MINI | COMPACT HEIGHT | THREADED | LOW PROFILE | HEAVY DUTY | ISO | HEAVY LOAD | POWER COMPACT STROKE |




| CODE | | CZ 1000 050 | KIT XXXXXXX-S<br>KIT XXXXXXX-C | A14-050 | 18 GA 5 |
|---|---|---|---|---|---|
| ENG | ORDER | GAS SPRING | REPAIR KIT | FLANGE | CHARGING ADAPTER |
| DEU | BESTELLUNG | GASDRUCKFEDER | ERSATZTEILSATZ | FLANSCHE | LADEADAPTER |
| FRA | COMMANDE | RESSORT À GAZ | KIT DE RÉPARATION | BRIDE | RACCORD DE CHARGE |
| ITA | ORDINE | CILINDRO AD AZOTO | KIT DI MANUTENZIONE | FLANGE | ADATTATORE DI CARICO |
| ESP | PEDIDO | RESORTE DE GAS | KIT DE REPARACION | BRIDA | ADAPTADOR DE CARGA |
| POR | PEDIDO | CILINDRO DE GÁS | KIT DE MANUTENÇÃO | FLANGE | ADAPTADOR DE CARGA |

# CZ 1000 V1

*Compact Height*

| | | |
|---|---|---|
| | | PSA E24.54.815.G |
| | | |
| | | TOYOTA SMS DKH 3221n |

AZOL GAS

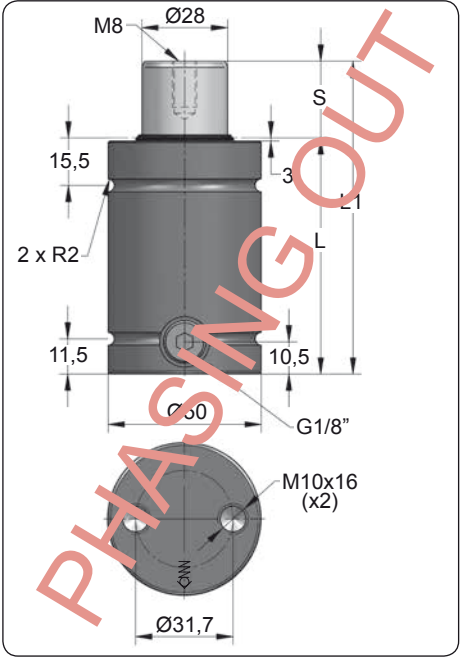


PHASING OUT

| ORDER | S (mm) | L1 ±0,25 (mm) | L (mm) | Kg. |
|---|---|---|---|---|
| CZ 1000 013 V1 | 13 | 78 | 65 | 0.81 |
| CZ 1000 016 V1 | 16 | 84 | 68 | 0.84 |
| CZ 1000 019 V1 | 19 | 90 | 71 | 0.86 |
| CZ 1000 025 V1 | 25 | 102 | 77 | 0.92 |
| CZ 1000 032 V1 | 32 | 116 | 84 | 0.99 |
| CZ 1000 038 V1 | 38 | 128 | 90 | 1.04 |
| CZ 1000 050 V1 | 50 | 152 | 102 | 1.16 |
| CZ 1000 063 V1 | 63 | 178 | 115 | 1.28 |
| CZ 1000 075 V1 | 75 | 202 | 127 | 1.40 |
| CZ 1000 080 V1 | 80 | 212 | 132 | 1.44 |
| CZ 1000 100 V1 | 100 | 252 | 152 | 1.63 |
| CZ 1000 125 V1 | 125 | 302 | 177 | 1.87 |

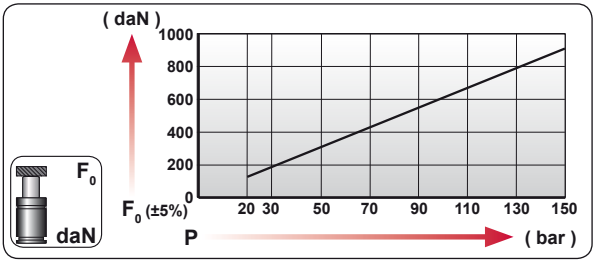


| CODE | bar | psi | F0 daN | F1 daN |
|---|---|---|---|---|
| CZ 1000 050 V1 | 150 | 2175 | 920 | 1630 |
| CZ-H 1000 050 V1 | 0 | 0 | --- | --- |

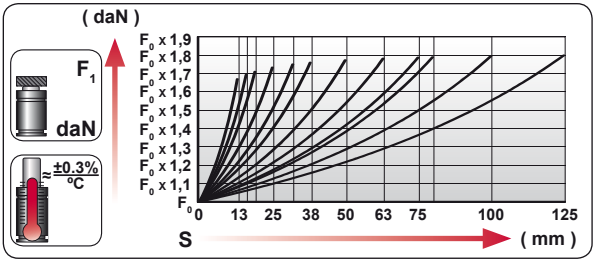


| | |
|---|---|
| ENG | ORDER |
| DEU | BESTELLUNG |
| FRA | COMMANDE |
| ITA | ORDINE |
| ESP | PEDIDO |
| POR | PEDIDO |

F0 daN — S mm

CZ 1000 50

CZ 1000 050 V1

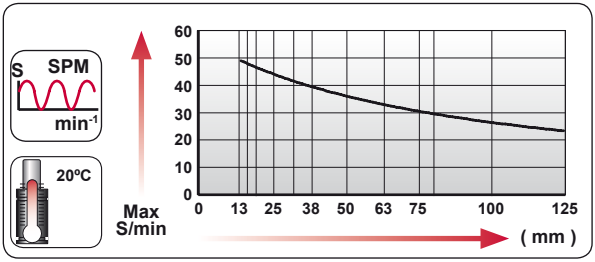


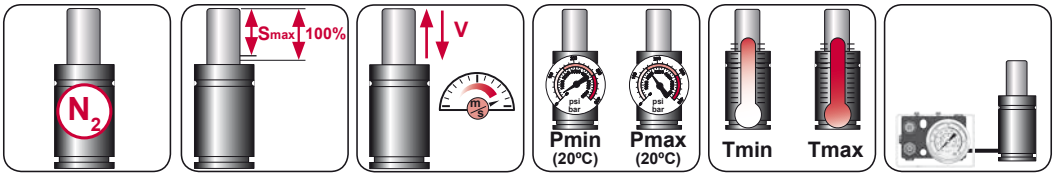


| $N_2$ | Smax < 90% | Vmax 1,6 m/s | bar psi 20 290 | bar psi 150 2175 | °C °F 0 32 | °C °F 80 176 | 600 CP- |
|---|---|---|---|---|---|---|---|

AZOL GAS

# CZ 1000 V1

*Compact Height*

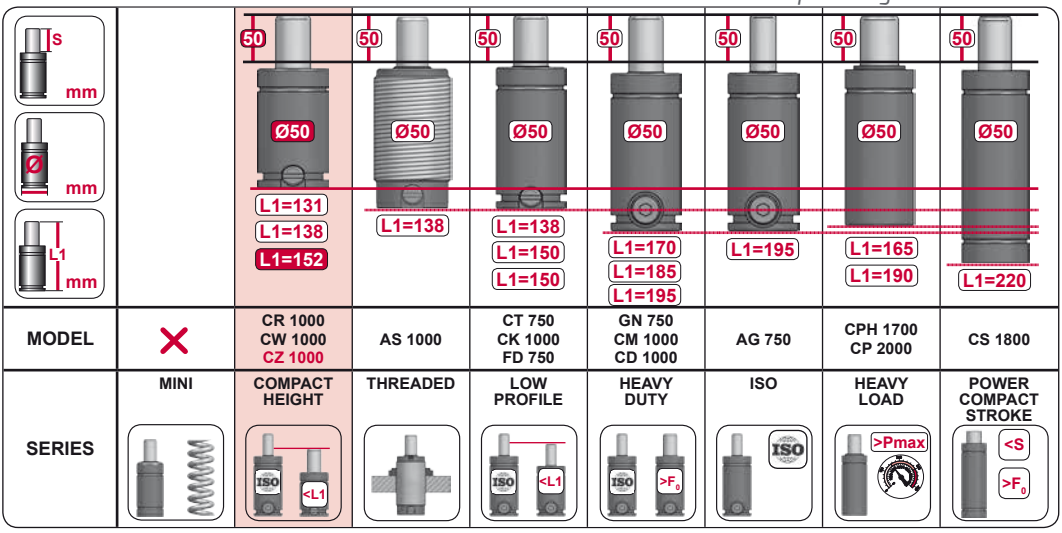


| MODEL | | CR 1000<br>CW 1000<br>CZ 1000 | AS 1000 | CT 750<br>CK 1000<br>FD 750 | GN 750<br>CM 1000<br>CD 1000 | AG 750 | CPH 1700<br>CP 2000 | CS 1800 |
|---|---|---|---|---|---|---|---|---|
| SERIES | MINI | COMPACT HEIGHT | THREADED | LOW PROFILE | HEAVY DUTY | ISO | HEAVY LOAD | POWER COMPACT STROKE |




| CODE | | CZ 1000 050 V1 | KIT XXXXXXX-S<br>KIT XXXXXXX-C | A14-050 | 18 GA 5 |
|---|---|---|---|---|---|
| ENG | ORDER | GAS SPRING | REPAIR KIT | FLANGE | CHARGING ADAPTER |
| DEU | BESTELLUNG | GASDRUCKFEDER | ERSATZTEILSATZ | FLANSCHE | LADEADAPTER |
| FRA | COMMANDE | RESSORT À GAZ | KIT DE RÉPARATION | BRIDE | RACCORD DE CHARGE |
| ITA | ORDINE | CILINDRO AD AZOTO | KIT DI MANUTENZIONE | FLANGE | ADATTATORE DI CARICO |
| ESP | PEDIDO | RESORTE DE GAS | KIT DE REPARACION | BRIDA | ADAPTADOR DE CARGA |
| POR | PEDIDO | CILINDRO DE GÁS | KIT DE MANUTENÇÃO | FLANGE | ADAPTADOR DE CARGA |

# CZ 1000 V1 MOUNTS

*Compact Height*

AZOL GAS

## A14-050

ISO · E24.54.815.G · EM24.54.700/F

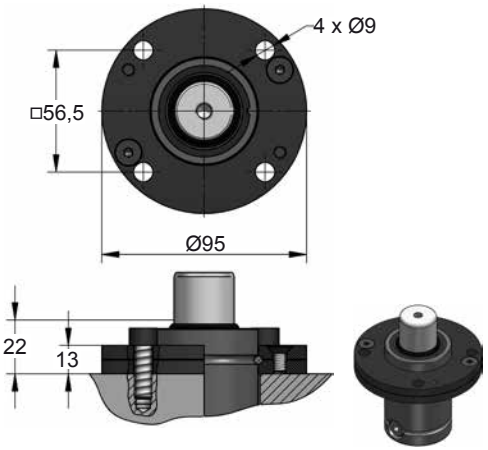


## A34-050

ISO · VDI

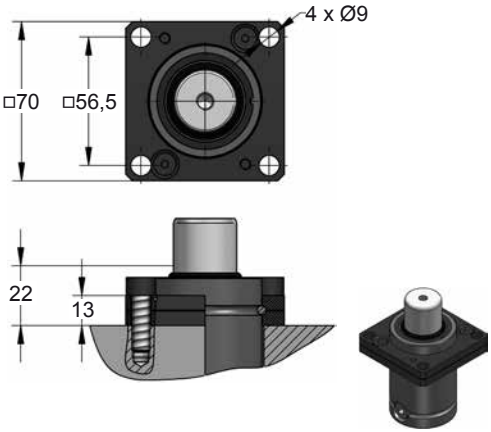


## A94-050

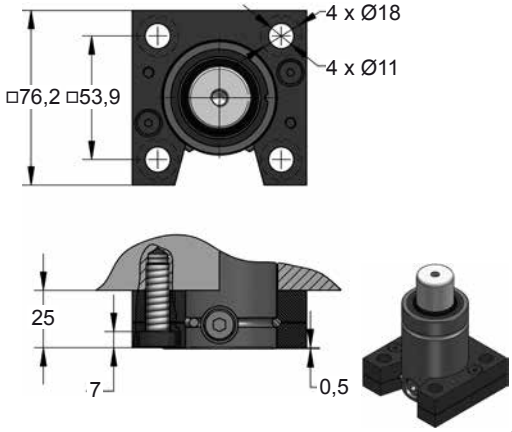


## B56-050

SMS DKH 3221n

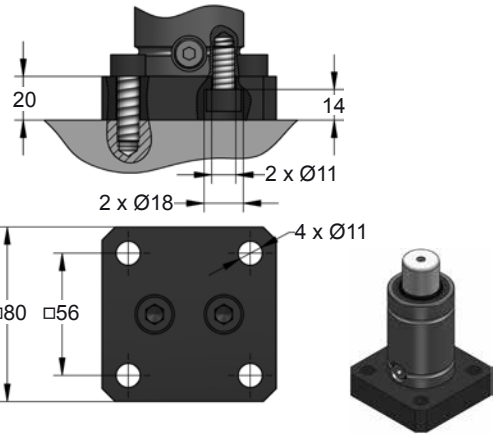









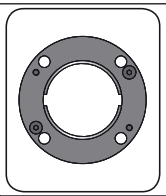

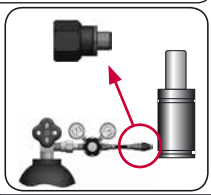

| CODE | | CZ 1000 050 V1 | KIT XXXXXXX-S<br>KIT XXXXXXX-C | A14-050 | 18 GA 5 |
|---|---|---|---|---|---|
| ENG | ORDER | GAS SPRING | REPAIR KIT | FLANGE | CHARGING ADAPTER |
| DEU | BESTELLUNG | GASDRUCKFEDER | ERSATZTEILSATZ | FLANSCHE | LADEADAPTER |
| FRA | COMMANDE | RESSORT À GAZ | KIT DE RÉPARATION | BRIDE | RACCORD DE CHARGE |
| ITA | ORDINE | CILINDRO AD AZOTO | KIT DI MANUTENZIONE | FLANGE | ADATTATORE DI CARICO |
| ESP | PEDIDO | RESORTE DE GAS | KIT DE REPARACION | BRIDA | ADAPTADOR DE CARGA |
| POR | PEDIDO | CILINDRO DE GÁS | KIT DE MANUTENÇÃO | FLANGE | ADAPTADOR DE CARGA |

AZOL GAS

# CZ 1000 V1 MOUNTS

*Compact Height*

## B61-050

SMS DKH 3221n

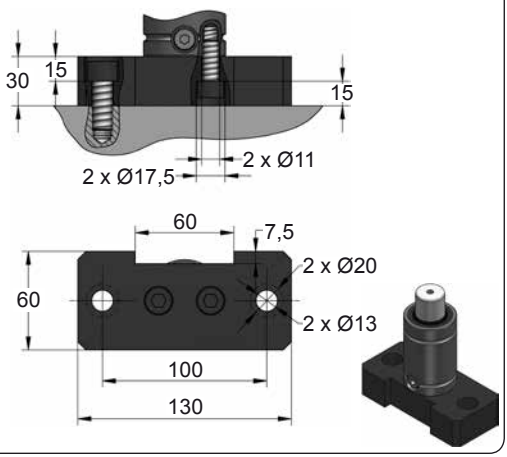


## B71-050

SMS DKH 3221n

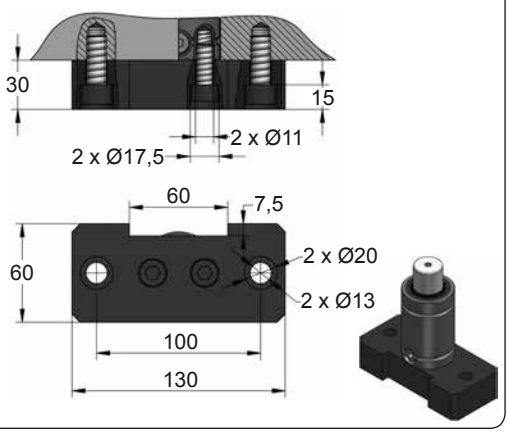


## B91-050

E24.54.815.G

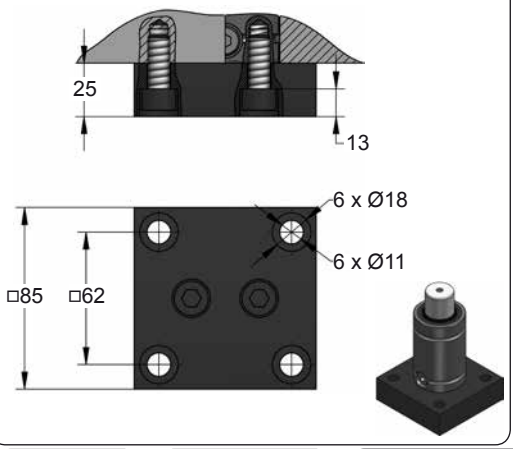


## D47-050

SMS DKH 3221n

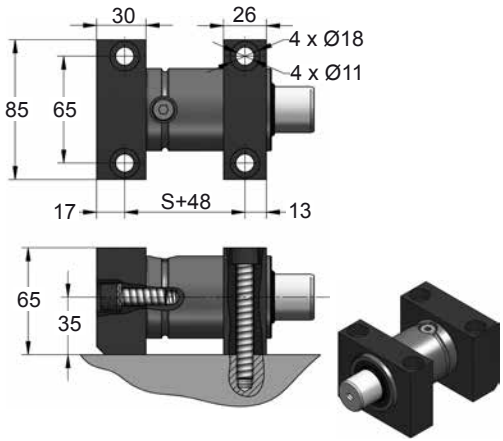









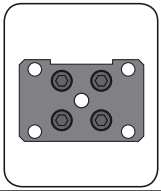

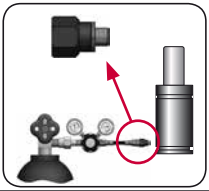

| CODE | | CZ 1000 050 V1 | KIT XXXXXXX-S<br>KIT XXXXXXX-C | B61-050 | 18 GA 5 |
|---|---|---|---|---|---|
| ENG | ORDER | GAS SPRING | REPAIR KIT | FLANGE | CHARGING ADAPTER |
| DEU | BESTELLUNG | GASDRUCKFEDER | ERSATZTEILSATZ | FLANSCHE | LADEADAPTER |
| FRA | COMMANDE | RESSORT À GAZ | KIT DE RÉPARATION | BRIDE | RACCORD DE CHARGE |
| ITA | ORDINE | CILINDRO AD AZOTO | KIT DI MANUTENZIONE | FLANGE | ADATTATORE DI CARICO |
| ESP | PEDIDO | RESORTE DE GAS | KIT DE REPARACION | BRIDA | ADAPTADOR DE CARGA |
| POR | PEDIDO | CILINDRO DE GÁS | KIT DE MANUTENÇÃO | FLANGE | ADAPTADOR DE CARGA |

# CZ 2400

*Compact Height*

AZOL GAS

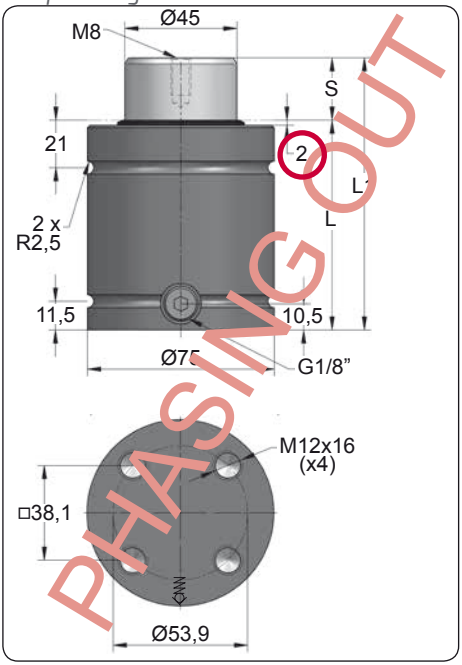


| ORDER | S (mm) | L1 ±0,25 (mm) | L (mm) | Kg. |
|---|---|---|---|---|
| CZ 2400 016 | 16 | 91 | 75 | 2.01 |
| CZ 2400 019 | 19 | 97 | 78 | 2.07 |
| CZ 2400 025 | 25 | 109 | 84 | 2.19 |
| CZ 2400 032 | 32 | 123 | 91 | 2.32 |
| CZ 2400 038 | 38 | 135 | 97 | 2.44 |
| CZ 2400 050 | 50 | 159 | 109 | 2.68 |
| CZ 2400 063 | 63 | 185 | 122 | 2.94 |
| CZ 2400 075 | 75 | 209 | 134 | 3.17 |
| CZ 2400 080 | 80 | 219 | 139 | 3.27 |
| CZ 2400 100 | 100 | 259 | 159 | 3.66 |
| CZ 2400 125 | 125 | 309 | 184 | 4.16 |

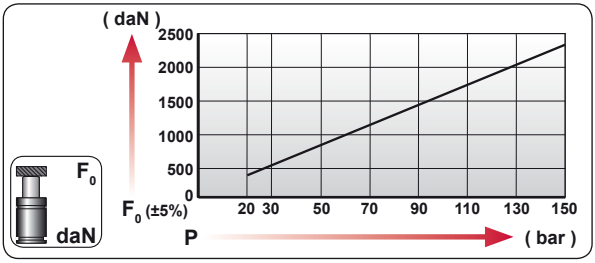


| CODE | bar | psi | F0 daN | F1 daN |
|---|---|---|---|---|
| CZ 2400 050 | 150 | 2175 | 2385 | 4170 |
| CZ-H 2400 050 | 0 | 0 | --- | --- |

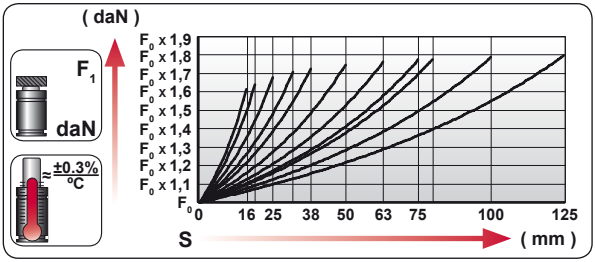


| | |
|---|---|
| ENG | ORDER |
| DEU | BESTELLUNG |
| FRA | COMMANDE |
| ITA | ORDINE |
| ESP | PEDIDO |
| POR | PEDIDO |

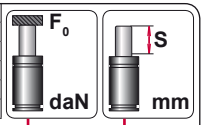


CZ 2400 50

CZ 2400 050

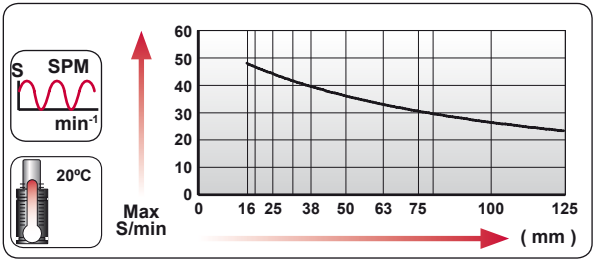


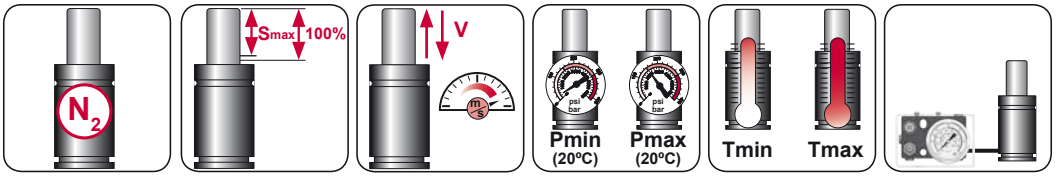


| $N_2$ | Smax < 90% | Vmax 1,6 m/s | bar psi 20 290 | bar psi 150 2175 | °C °F 0 32 | °C °F 80 176 | 600 CP- |
|---|---|---|---|---|---|---|---|

AZOL GAS

# CZ 2400

*Compact Height*

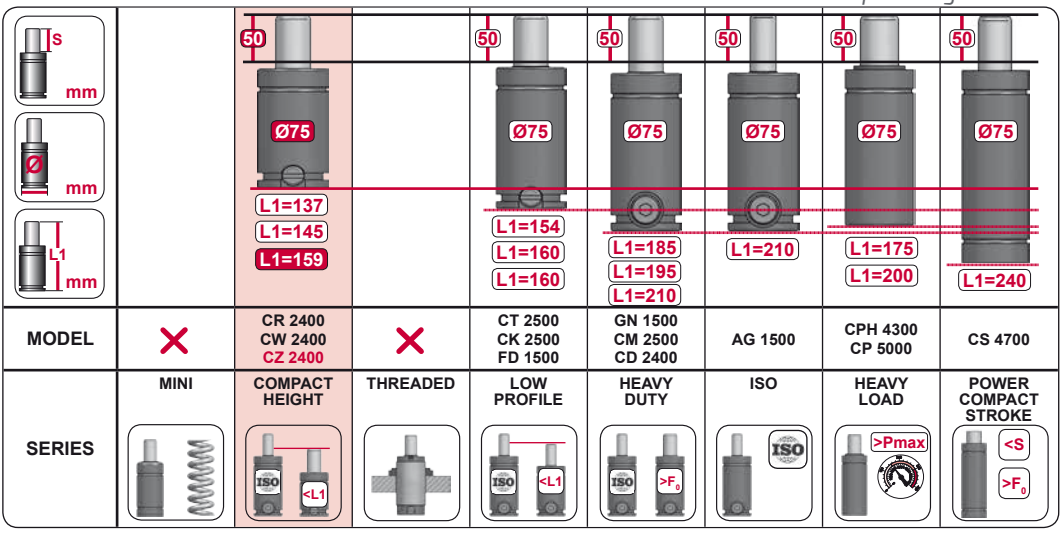


| | | | | | | | | |
|---|---|---|---|---|---|---|---|---|
| **MODEL** | ✕ | CR 2400<br>CW 2400<br>CZ 2400 | ✕ | CT 2500<br>CK 2500<br>FD 1500 | GN 1500<br>CM 2500<br>CD 2400 | AG 1500 | CPH 4300<br>CP 5000 | CS 4700 |
| **SERIES** | MINI | COMPACT HEIGHT | THREADED | LOW PROFILE | HEAVY DUTY | ISO | HEAVY LOAD | POWER COMPACT STROKE |




| CODE | | CZ 2400 050 | KIT XXXXXXX-S<br>KIT XXXXXXX-C | A14-075 | 18 GA 5 |
|---|---|---|---|---|---|
| ENG | ORDER | GAS SPRING | REPAIR KIT | FLANGE | CHARGING ADAPTER |
| DEU | BESTELLUNG | GASDRUCKFEDER | ERSATZTEILSATZ | FLANSCHE | LADEADAPTER |
| FRA | COMMANDE | RESSORT À GAZ | KIT DE RÉPARATION | BRIDE | RACCORD DE CHARGE |
| ITA | ORDINE | CILINDRO AD AZOTO | KIT DI MANUTENZIONE | FLANGE | ADATTATORE DI CARICO |
| ESP | PEDIDO | RESORTE DE GAS | KIT DE REPARACION | BRIDA | ADAPTADOR DE CARGA |
| POR | PEDIDO | CILINDRO DE GÁS | KIT DE MANUTENÇÃO | FLANGE | ADAPTADOR DE CARGA |

# CZ 2400 V1

*Compact Height*

| | | |
|---|---|---|
| | | PSA E24.54.815.G |
| | | |
| | | TOYOTA SMS DKH 3221n |

AZOL GAS

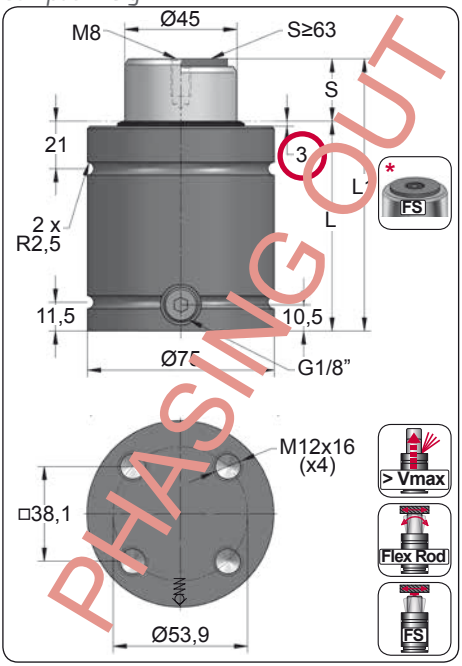


PHASING OUT

| ORDER | S (mm) | L1 ±0,25 (mm) | L (mm) | Kg. |
|---|---|---|---|---|
| CZ 2400 016 V1 | 16 | 91 | 75 | 2.01 |
| CZ 2400 019 V1 | 19 | 97 | 78 | 2.07 |
| CZ 2400 025 V1 | 25 | 109 | 84 | 2.19 |
| CZ 2400 032 V1 | 32 | 123 | 91 | 2.32 |
| CZ 2400 038 V1 | 38 | 135 | 97 | 2.44 |
| CZ 2400 050 V1 | 50 | 159 | 109 | 2.68 |
| CZ 2400 063 V1 * | 63 | 185 | 122 | 2.94 |
| CZ 2400 075 V1 * | 75 | 209 | 134 | 3.17 |
| CZ 2400 080 V1 * | 80 | 219 | 139 | 3.27 |
| CZ 2400 100 V1 * | 100 | 259 | 159 | 3.66 |
| CZ 2400 125 V1 * | 125 | 309 | 184 | 4.16 |

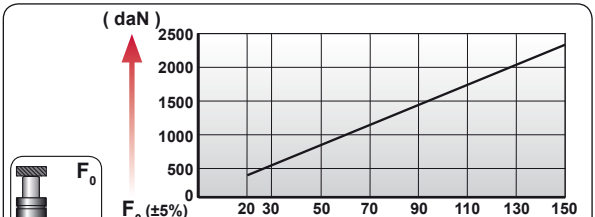


| CODE | bar | psi | F0 daN | F1 daN |
|---|---|---|---|---|
| CZ 2400 050 V1 | 150 | 2175 | 2385 | 4170 |
| CZ-H 2400 050 V1 | 0 | 0 | --- | --- |

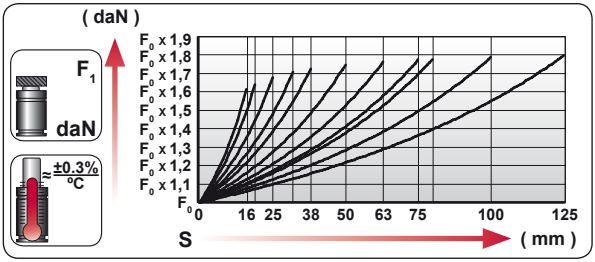


| | |
|---|---|
| ENG | ORDER |
| DEU | BESTELLUNG |
| FRA | COMMANDE |
| ITA | ORDINE |
| ESP | PEDIDO |
| POR | PEDIDO |

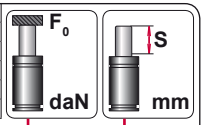


CZ 2400 50

CZ 2400 050 V1

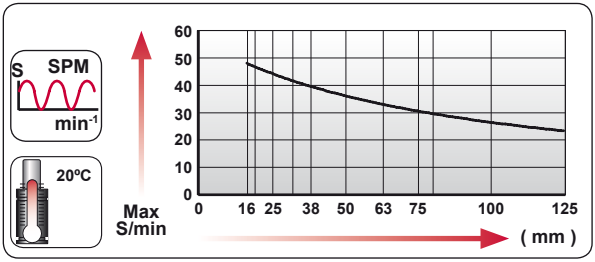


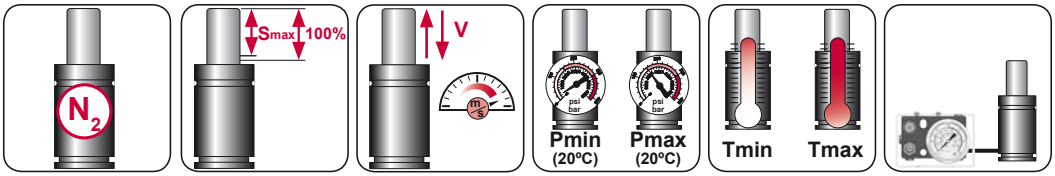


| $N_2$ | Smax < 90% | Vmax 1,6 m/s | bar psi 20 290 | bar psi 150 2175 | °C °F 0 32 | °C °F 80 176 | 600 CP- |
|---|---|---|---|---|---|---|---|

AZOL GAS

# CZ 2400 V1

*Compact Height*

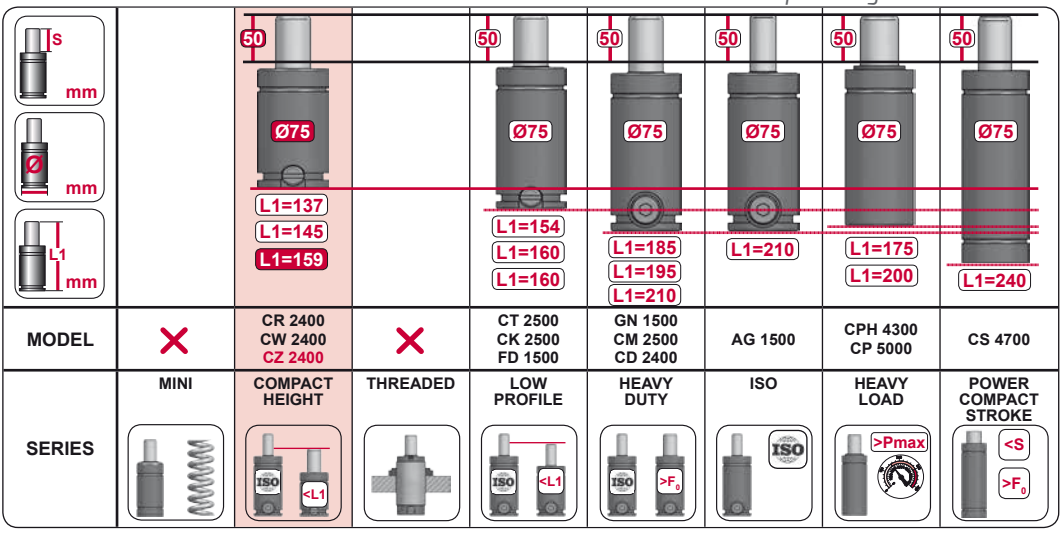


| MODEL | | CR 2400<br>CW 2400<br>CZ 2400 | | CT 2500<br>CK 2500<br>FD 1500 | GN 1500<br>CM 2500<br>CD 2400 | AG 1500 | CPH 4300<br>CP 5000 | CS 4700 |
|---|---|---|---|---|---|---|---|---|
| SERIES | MINI | COMPACT HEIGHT | THREADED | LOW PROFILE | HEAVY DUTY | ISO | HEAVY LOAD | POWER COMPACT STROKE |




| CODE | | CZ 2400 050 V1 | KIT XXXXXXX-S<br>KIT XXXXXXX-C | A14-075 | 18 GA 5 |
|---|---|---|---|---|---|
| ENG | ORDER | GAS SPRING | REPAIR KIT | FLANGE | CHARGING ADAPTER |
| DEU | BESTELLUNG | GASDRUCKFEDER | ERSATZTEILSATZ | FLANSCHE | LADEADAPTER |
| FRA | COMMANDE | RESSORT À GAZ | KIT DE RÉPARATION | BRIDE | RACCORD DE CHARGE |
| ITA | ORDINE | CILINDRO AD AZOTO | KIT DI MANUTENZIONE | FLANGE | ADATTATORE DI CARICO |
| ESP | PEDIDO | RESORTE DE GAS | KIT DE REPARACION | BRIDA | ADAPTADOR DE CARGA |
| POR | PEDIDO | CILINDRO DE GÁS | KIT DE MANUTENÇÃO | FLANGE | ADAPTADOR DE CARGA |

# CZ 2400 V1 MOUNTS

*Compact Height*

AZOL GAS

## A14-075

E24.54.815.G
EM24.54.700/F

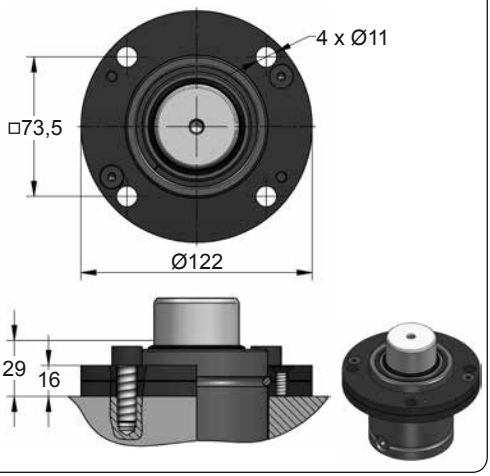


## A94-075

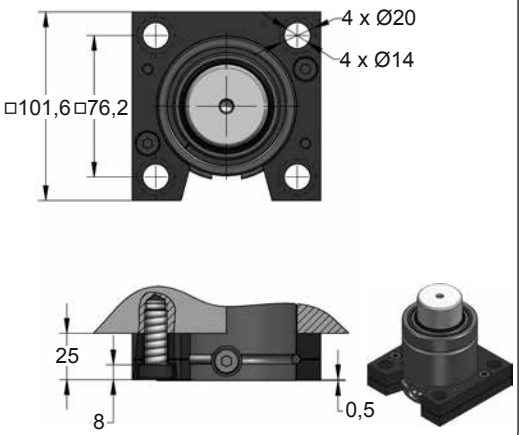


## B56-075

SMS DKH 3221n

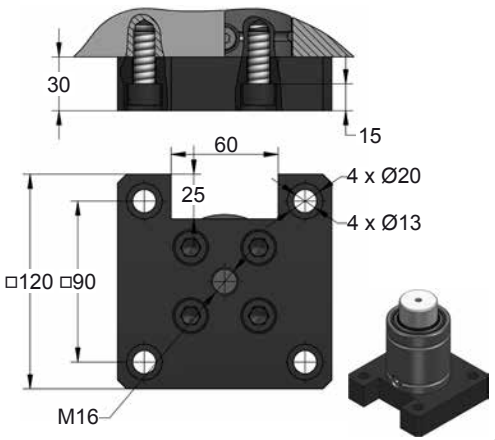


## B61-075

SMS DKH 3221n

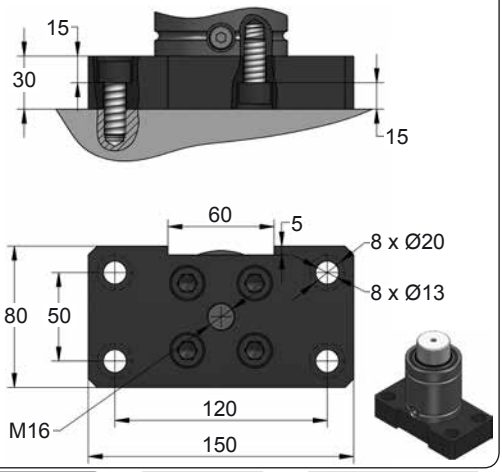









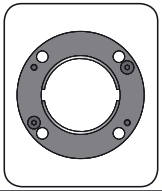

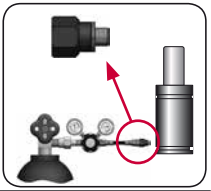

| CODE | | CZ 2400 050 V1 | KIT XXXXXXX-S<br>KIT XXXXXXX-C | A14-075 | 18 GA 5 |
|---|---|---|---|---|---|
| ENG | ORDER | GAS SPRING | REPAIR KIT | FLANGE | CHARGING ADAPTER |
| DEU | BESTELLUNG | GASDRUCKFEDER | ERSATZTEILSATZ | FLANSCHE | LADEADAPTER |
| FRA | COMMANDE | RESSORT À GAZ | KIT DE RÉPARATION | BRIDE | RACCORD DE CHARGE |
| ITA | ORDINE | CILINDRO AD AZOTO | KIT DI MANUTENZIONE | FLANGE | ADATTATORE DI CARICO |
| ESP | PEDIDO | RESORTE DE GAS | KIT DE REPARACION | BRIDA | ADAPTADOR DE CARGA |
| POR | PEDIDO | CILINDRO DE GÁS | KIT DE MANUTENÇÃO | FLANGE | ADAPTADOR DE CARGA |

AZOL GAS

# CZ 2400 V1 MOUNTS

*Compact Height*

## B66-075

SMS DKH 3221n

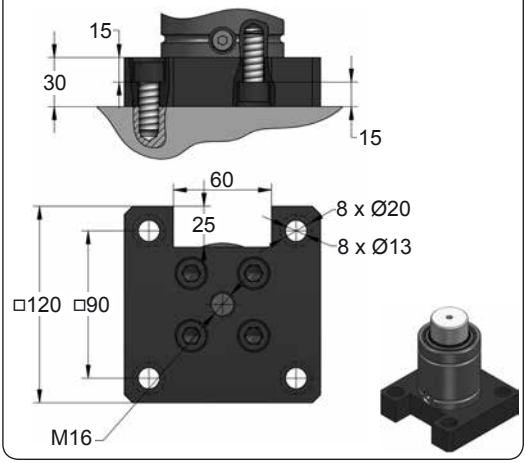


## B71-075

SMS DKH 3221n

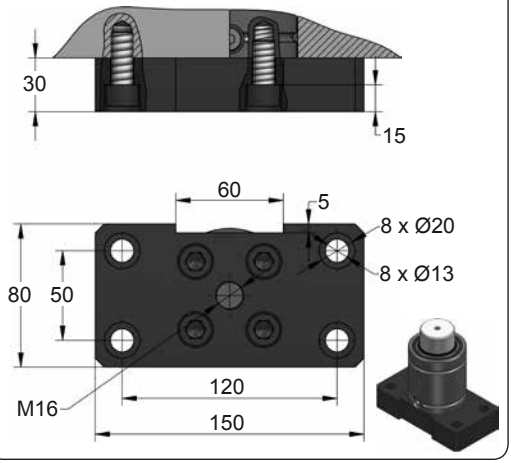


## B91-075

E24.54.815.G

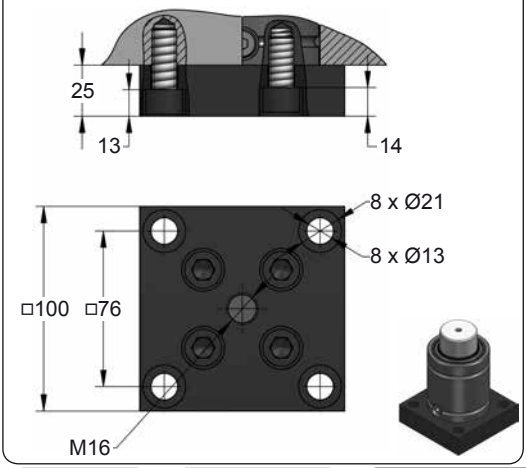


## D47-075

SMS DKH 3221n

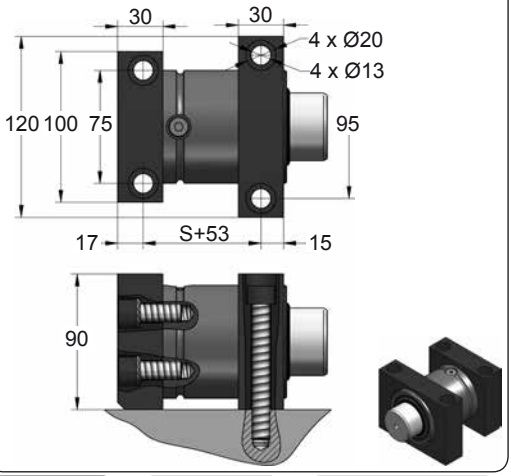









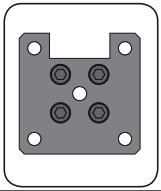

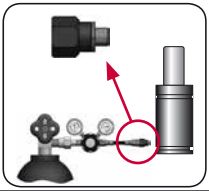

| CODE | | CZ 2400 050 V1 | KIT XXXXXXX-S<br>KIT XXXXXXX-C | B66-075 | 18 GA 5 |
|---|---|---|---|---|---|
| ENG | ORDER | GAS SPRING | REPAIR KIT | FLANGE | CHARGING ADAPTER |
| DEU | BESTELLUNG | GASDRUCKFEDER | ERSATZTEILSATZ | FLANSCHE | LADEADAPTER |
| FRA | COMMANDE | RESSORT À GAZ | KIT DE RÉPARATION | BRIDE | RACCORD DE CHARGE |
| ITA | ORDINE | CILINDRO AD AZOTO | KIT DI MANUTENZIONE | FLANGE | ADATTATORE DI CARICO |
| ESP | PEDIDO | RESORTE DE GAS | KIT DE REPARACION | BRIDA | ADAPTADOR DE CARGA |
| POR | PEDIDO | CILINDRO DE GÁS | KIT DE MANUTENÇÃO | FLANGE | ADAPTADOR DE CARGA |

# CZ 4200

*Compact Height*

AZOL GAS

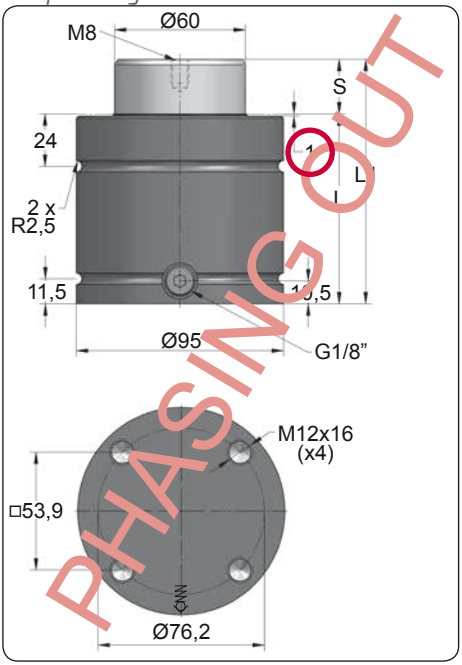


PHASING OUT

| ORDER | S (mm) | L1 ±0,25 (mm) | L (mm) | Kg. |
|---|---|---|---|---|
| CZ 4200 016 | 16 | 94 | 78 | 3.60 |
| CZ 4200 019 | 19 | 100 | 81 | 3.70 |
| CZ 4200 025 | 25 | 112 | 87 | 3.91 |
| CZ 4200 032 | 32 | 126 | 94 | 4.15 |
| CZ 4200 038 | 38 | 138 | 100 | 4.36 |
| CZ 4200 050 | 50 | 162 | 112 | 4.77 |
| CZ 4200 063 | 63 | 188 | 125 | 5.22 |
| CZ 4200 075 | 75 | 212 | 137 | 5.63 |
| CZ 4200 080 | 80 | 222 | 142 | 5.81 |
| CZ 4200 100 | 100 | 262 | 162 | 6.50 |
| CZ 4200 125 | 125 | 312 | 187 | 7.36 |

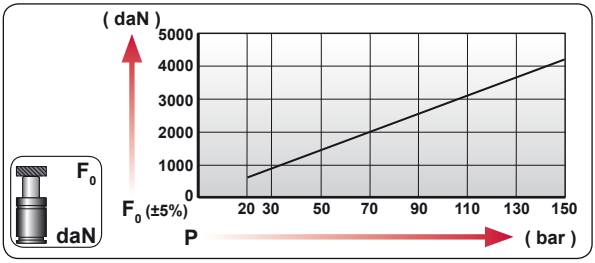


| CODE | bar | psi | F0 daN | F1 daN |
|---|---|---|---|---|
| CZ 4200 050 | 150 | 2175 | 4240 | 8261 |
| CZ-H 4200 050 | 0 | 0 | --- | --- |

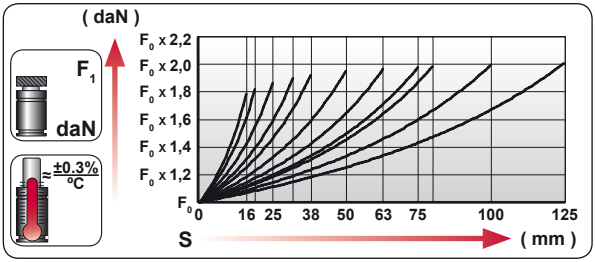


| ENG | ORDER |
|---|---|
| DEU | BESTELLUNG |
| FRA | COMMANDE |
| ITA | ORDINE |
| ESP | PEDIDO |
| POR | PEDIDO |

F0 daN — S mm

CZ 4200 50

CZ 4200 050

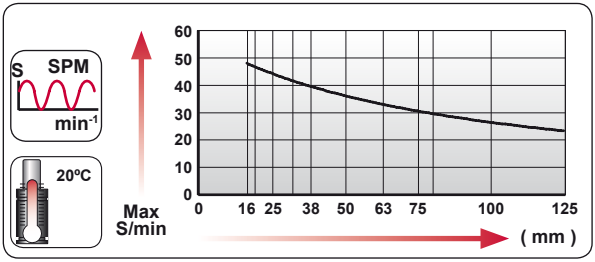


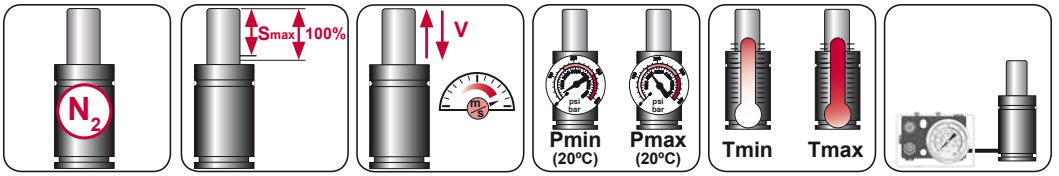


| N2 | Smax < 90% | Vmax 1,6 m/s | bar psi 20 290 | bar psi 150 2175 | °C °F 0 32 | °C °F 80 176 | 600 CP- |
|---|---|---|---|---|---|---|---|

AZOL GAS

# CZ 4200
*Compact Height*

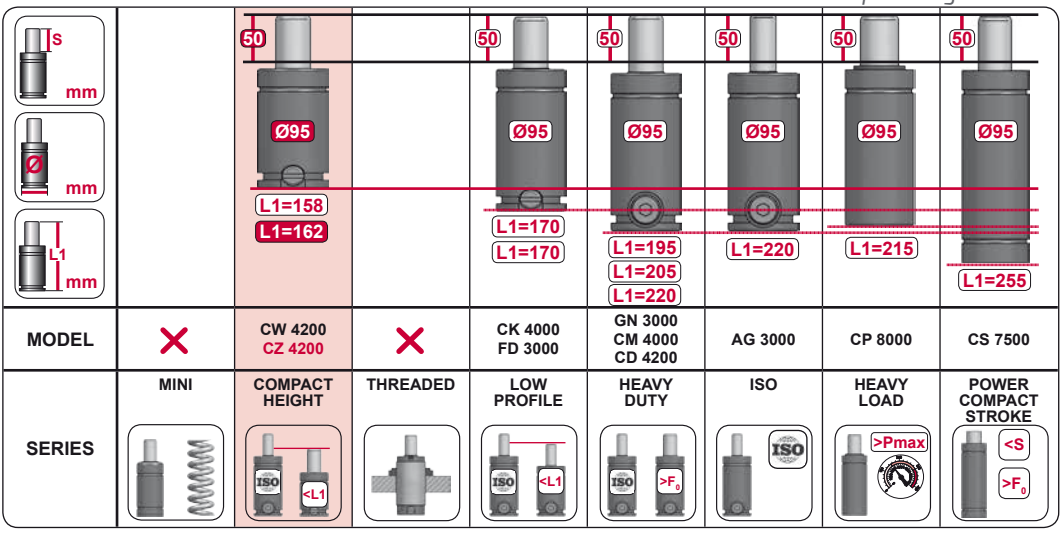


| MODEL | × | CW 4200<br>CZ 4200 | × | CK 4000<br>FD 3000 | GN 3000<br>CM 4000<br>CD 4200 | AG 3000 | CP 8000 | CS 7500 |
|---|---|---|---|---|---|---|---|---|
| SERIES | MINI | COMPACT HEIGHT | THREADED | LOW PROFILE | HEAVY DUTY | ISO | HEAVY LOAD | POWER COMPACT STROKE |




| CODE | | CZ 4200 050 | KIT XXXXXXX-S<br>KIT XXXXXXX-C | A14-095 | 18 GA 5 |
|---|---|---|---|---|---|
| ENG | ORDER | GAS SPRING | REPAIR KIT | FLANGE | CHARGING ADAPTER |
| DEU | BESTELLUNG | GASDRUCKFEDER | ERSATZTEILSATZ | FLANSCHE | LADEADAPTER |
| FRA | COMMANDE | RESSORT À GAZ | KIT DE RÉPARATION | BRIDE | RACCORD DE CHARGE |
| ITA | ORDINE | CILINDRO AD AZOTO | KIT DI MANUTENZIONE | FLANGE | ADATTATORE DI CARICO |
| ESP | PEDIDO | RESORTE DE GAS | KIT DE REPARACION | BRIDA | ADAPTADOR DE CARGA |
| POR | PEDIDO | CILINDRO DE GÁS | KIT DE MANUTENÇÃO | FLANGE | ADAPTADOR DE CARGA |

# CZ 4200 V1

*Compact Height*

| | | |
|---|---|---|
| | | PSA E24.54.815.G |
| | | |
| | | TOYOTA SMS DKH 3221n |

AZOL GAS

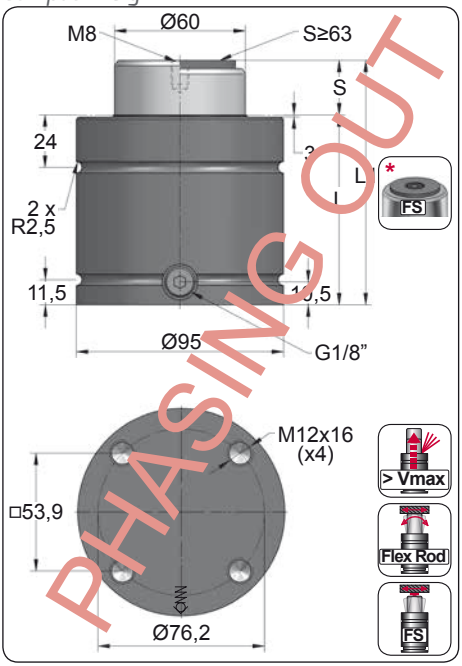


PHASING OUT

| ORDER | S (mm) | L1 ±0,25 (mm) | L (mm) | Kg. |
|---|---|---|---|---|
| CZ 4200 016 V1 | 16 | 94 | 78 | 3.60 |
| CZ 4200 019 V1 | 19 | 100 | 81 | 3.70 |
| CZ 4200 025 V1 | 25 | 112 | 87 | 3.91 |
| CZ 4200 032 V1 | 32 | 126 | 94 | 4.15 |
| CZ 4200 038 V1 | 38 | 138 | 100 | 4.36 |
| CZ 4200 050 V1 | 50 | 162 | 112 | 4.77 |
| CZ 4200 063 V1 * | 63 | 188 | 125 | 5.22 |
| CZ 4200 075 V1 * | 75 | 212 | 137 | 5.63 |
| CZ 4200 080 V1 * | 80 | 222 | 142 | 5.81 |
| CZ 4200 100 V1 * | 100 | 262 | 162 | 6.50 |
| CZ 4200 125 V1 * | 125 | 312 | 187 | 7.36 |

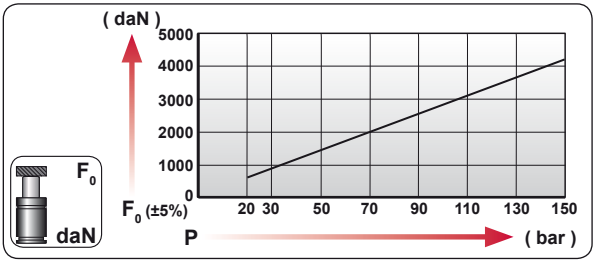


| CODE | bar | psi | $F_0$ daN | $F_1$ daN |
|---|---|---|---|---|
| CZ 4200 050 V1 | 150 | 2175 | 4240 | 8261 |
| CZ-H 4200 050 V1 | 0 | 0 | --- | --- |

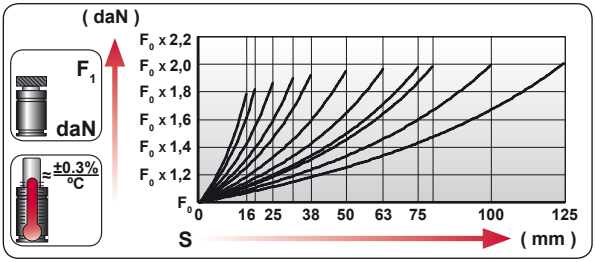


| | |
|---|---|
| ENG | ORDER |
| DEU | BESTELLUNG |
| FRA | COMMANDE |
| ITA | ORDINE |
| ESP | PEDIDO |
| POR | PEDIDO |

$F_0$ daN — S mm

CZ 4200 50

CZ 4200 050 V1

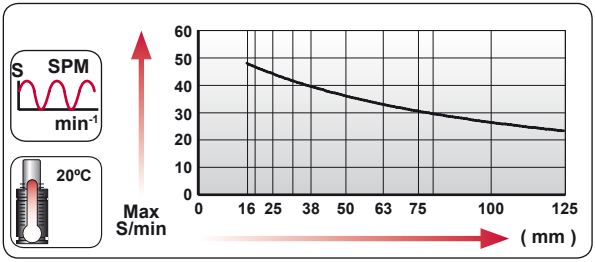


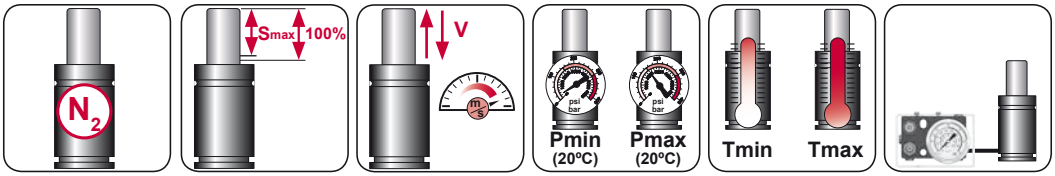


| $N_2$ | Smax < 90% | Vmax 1,6 m/s | bar psi 20 290 | bar psi 150 2175 | °C °F 0 32 | °C °F 80 176 | 600 CP- |
|---|---|---|---|---|---|---|---|

AZOL GAS

# CZ 4200 V1

*Compact Height*

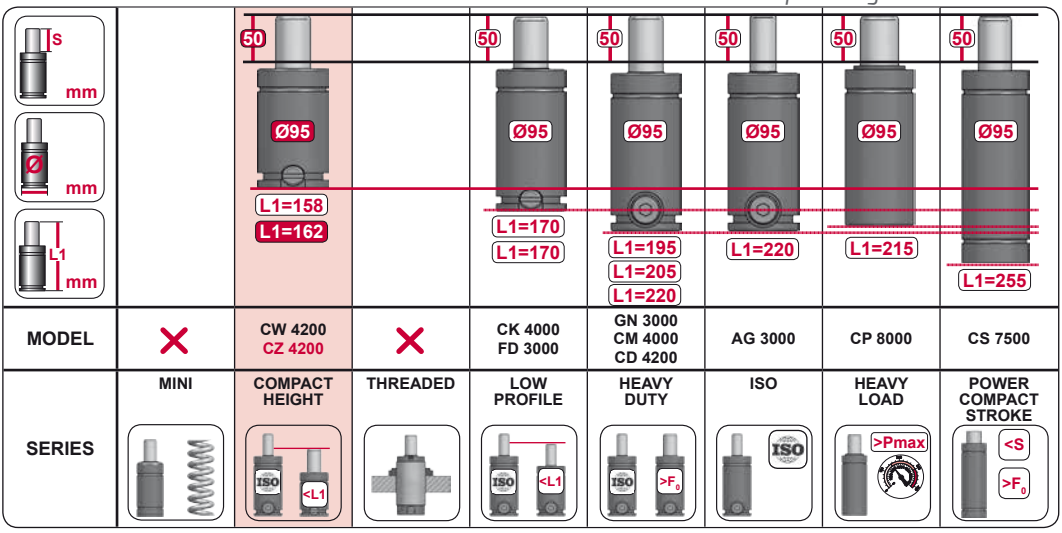


| MODEL | | CW 4200<br>CZ 4200 | | CK 4000<br>FD 3000 | GN 3000<br>CM 4000<br>CD 4200 | AG 3000 | CP 8000 | CS 7500 |
|---|---|---|---|---|---|---|---|---|
| SERIES | MINI | COMPACT HEIGHT | THREADED | LOW PROFILE | HEAVY DUTY | ISO | HEAVY LOAD | POWER COMPACT STROKE |




| CODE | | CZ 4200 050 V1 | KIT XXXXXXX-S<br>KIT XXXXXXX-C | A14-095 | 18 GA 5 |
|---|---|---|---|---|---|
| ENG | ORDER | GAS SPRING | REPAIR KIT | FLANGE | CHARGING ADAPTER |
| DEU | BESTELLUNG | GASDRUCKFEDER | ERSATZTEILSATZ | FLANSCHE | LADEADAPTER |
| FRA | COMMANDE | RESSORT À GAZ | KIT DE RÉPARATION | BRIDE | RACCORD DE CHARGE |
| ITA | ORDINE | CILINDRO AD AZOTO | KIT DI MANUTENZIONE | FLANGE | ADATTATORE DI CARICO |
| ESP | PEDIDO | RESORTE DE GAS | KIT DE REPARACION | BRIDA | ADAPTADOR DE CARGA |
| POR | PEDIDO | CILINDRO DE GÁS | KIT DE MANUTENÇÃO | FLANGE | ADAPTADOR DE CARGA |

# CZ 4200 V1 MOUNTS

*Compact Height*

AZOL GAS

## A14-095

E24.54.815.G
EM24.54.700/F

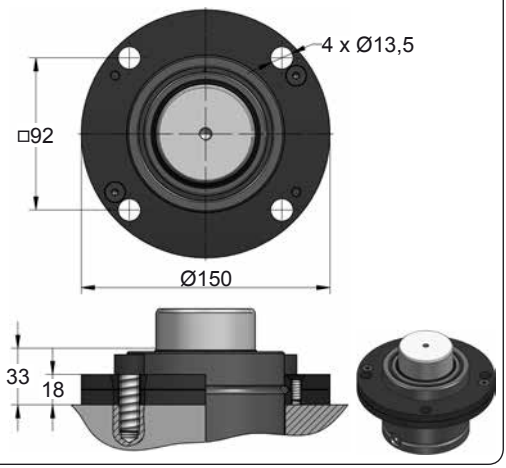


## A34-095

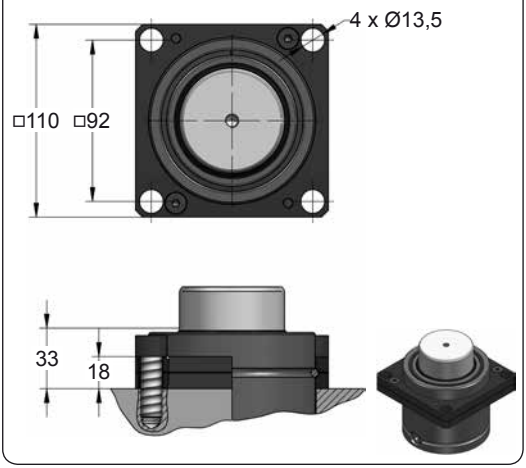


## A94-095

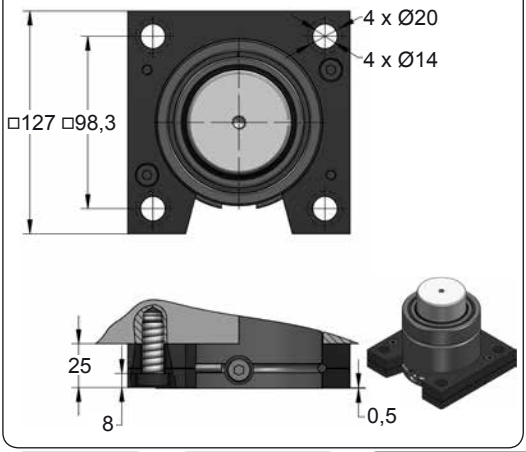


## B56-095

SMS DKH 3221n

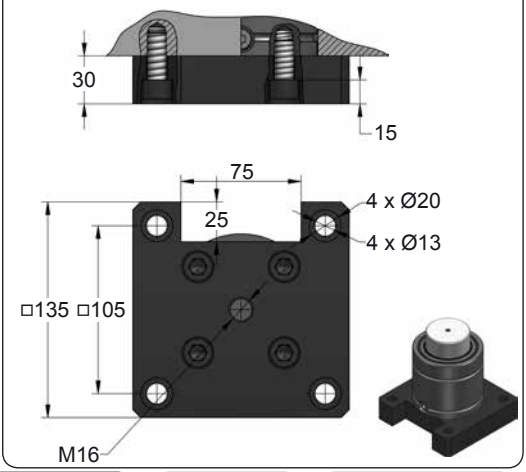









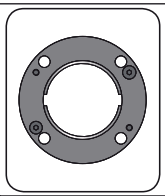

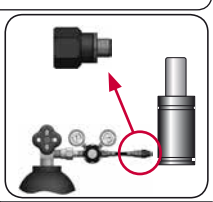

| CODE | | CZ 4200 050 V1 | KIT XXXXXXX-S<br>KIT XXXXXXX-C | A14-095 | 18 GA 5 |
|---|---|---|---|---|---|
| ENG | ORDER | GAS SPRING | REPAIR KIT | FLANGE | CHARGING ADAPTER |
| DEU | BESTELLUNG | GASDRUCKFEDER | ERSATZTEILSATZ | FLANSCHE | LADEADAPTER |
| FRA | COMMANDE | RESSORT À GAZ | KIT DE RÉPARATION | BRIDE | RACCORD DE CHARGE |
| ITA | ORDINE | CILINDRO AD AZOTO | KIT DI MANUTENZIONE | FLANGE | ADATTATORE DI CARICO |
| ESP | PEDIDO | RESORTE DE GAS | KIT DE REPARACION | BRIDA | ADAPTADOR DE CARGA |
| POR | PEDIDO | CILINDRO DE GÁS | KIT DE MANUTENÇÃO | FLANGE | ADAPTADOR DE CARGA |

AZOL GAS

# CZ 4200 V1 MOUNTS

*Compact Height*

## B61-095

SMS DKH 3221n

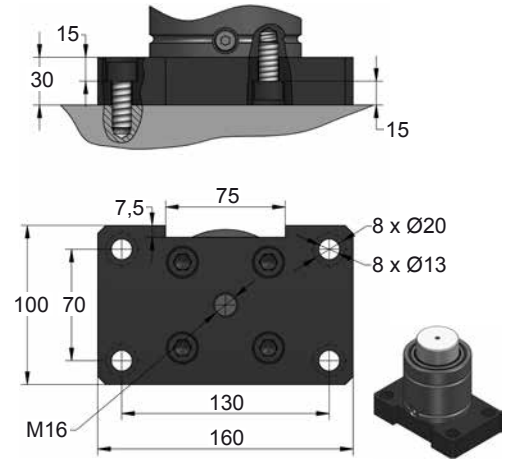


## B66-095

SMS DKH 3221n

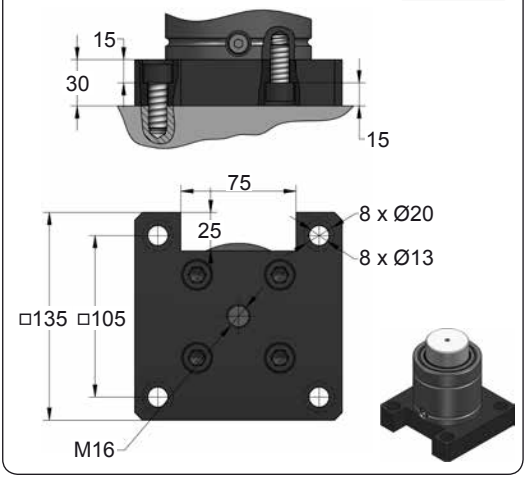


## B71-095

SMS DKH 3221n

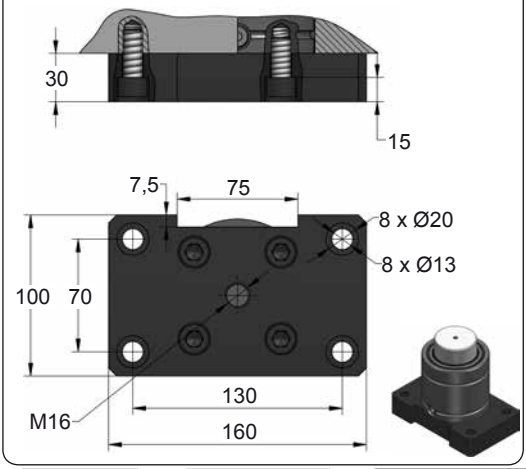


## B91-095

E24.54.815.G

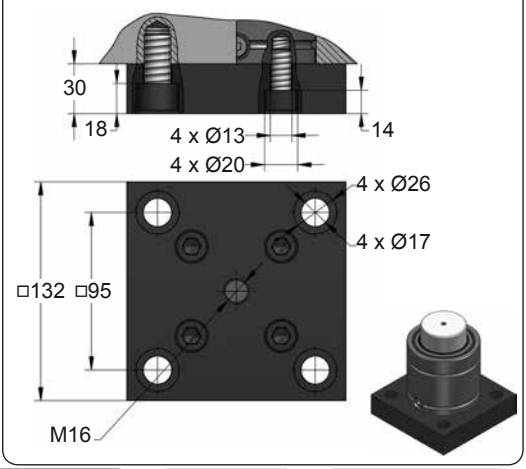









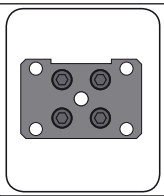

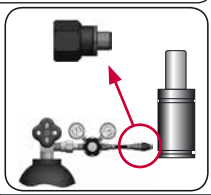

| CODE | | CZ 4200 050 V1 | KIT XXXXXXX-S<br>KIT XXXXXXX-C | B61-095 | 18 GA 5 |
|---|---|---|---|---|---|
| ENG | ORDER | GAS SPRING | REPAIR KIT | FLANGE | CHARGING ADAPTER |
| DEU | BESTELLUNG | GASDRUCKFEDER | ERSATZTEILSATZ | FLANSCHE | LADEADAPTER |
| FRA | COMMANDE | RESSORT À GAZ | KIT DE RÉPARATION | BRIDE | RACCORD DE CHARGE |
| ITA | ORDINE | CILINDRO AD AZOTO | KIT DI MANUTENZIONE | FLANGE | ADATTATORE DI CARICO |
| ESP | PEDIDO | RESORTE DE GAS | KIT DE REPARACION | BRIDA | ADAPTADOR DE CARGA |
| POR | PEDIDO | CILINDRO DE GÁS | KIT DE MANUTENÇÃO | FLANGE | ADAPTADOR DE CARGA |

# CZ 6600

*Compact Height*

AZOL GAS

TOYOTA SMS DKH 3221n

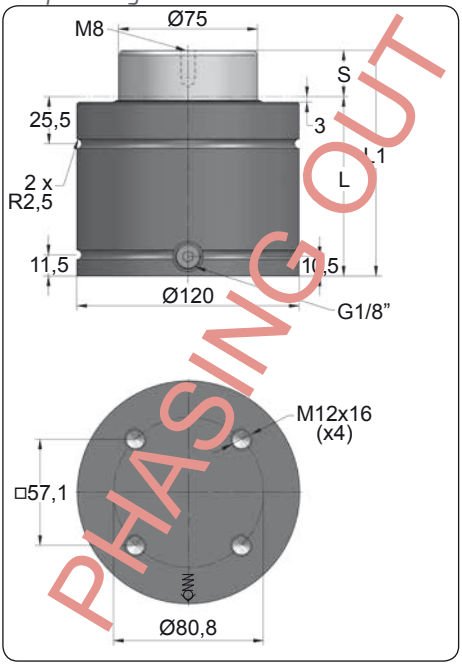


| ORDER | S (mm) | L1 ±0,25 (mm) | L (mm) | Kg. |
|---|---|---|---|---|
| CZ 6600 016 | 16 | 104 | 88 | 6.37 |
| CZ 6600 019 | 19 | 110 | 91 | 6.53 |
| CZ 6600 025 | 25 | 122 | 97 | 6.86 |
| CZ 6600 032 | 32 | 136 | 104 | 7.24 |
| CZ 6600 038 | 38 | 148 | 110 | 7.56 |
| CZ 6600 050 | 50 | 172 | 122 | 8.21 |
| CZ 6600 063 | 63 | 198 | 135 | 8.92 |
| CZ 6600 075 | 75 | 222 | 147 | 9.57 |
| CZ 6600 080 | 80 | 232 | 152 | 9.84 |
| CZ 6600 100 | 100 | 272 | 172 | 10.93 |
| CZ 6600 125 | 125 | 322 | 197 | 12.28 |

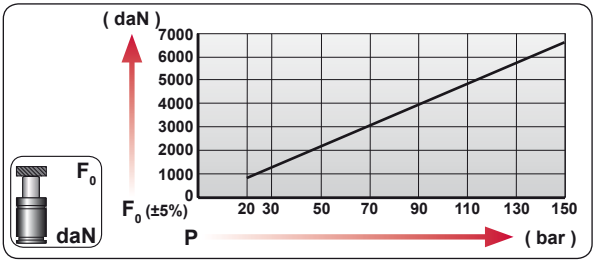


| CODE | bar | psi | $F_0$ daN | $F_1$ daN |
|---|---|---|---|---|
| CZ 6600 050 | 150 | 2175 | 6630 | 12509 |
| CZ-H 6600 050 | 0 | 0 | --- | --- |

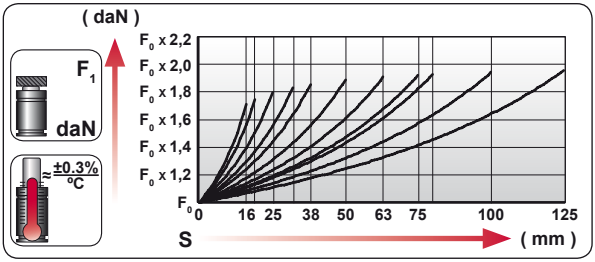


| | |
|---|---|
| ENG | ORDER |
| DEU | BESTELLUNG |
| FRA | COMMANDE |
| ITA | ORDINE |
| ESP | PEDIDO |
| POR | PEDIDO |

$F_0$ daN — S mm

CZ 6600 50

CZ 6600 050

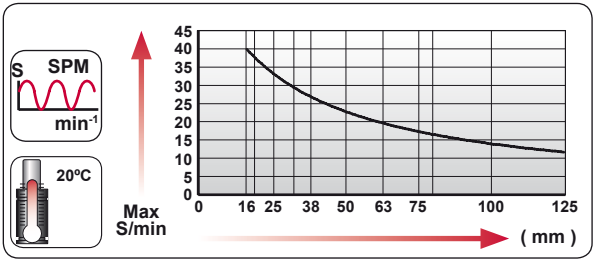


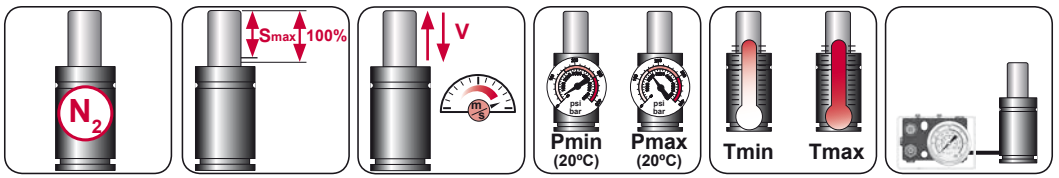


| $N_2$ | Smax < 90% | Vmax 1,6 m/s | bar psi 20 290 | bar psi 150 2175 | °C °F 0 32 | °C °F 80 176 | 600 CP- |
|---|---|---|---|---|---|---|---|

AZOL GAS

# CZ 6600

*Compact Height*

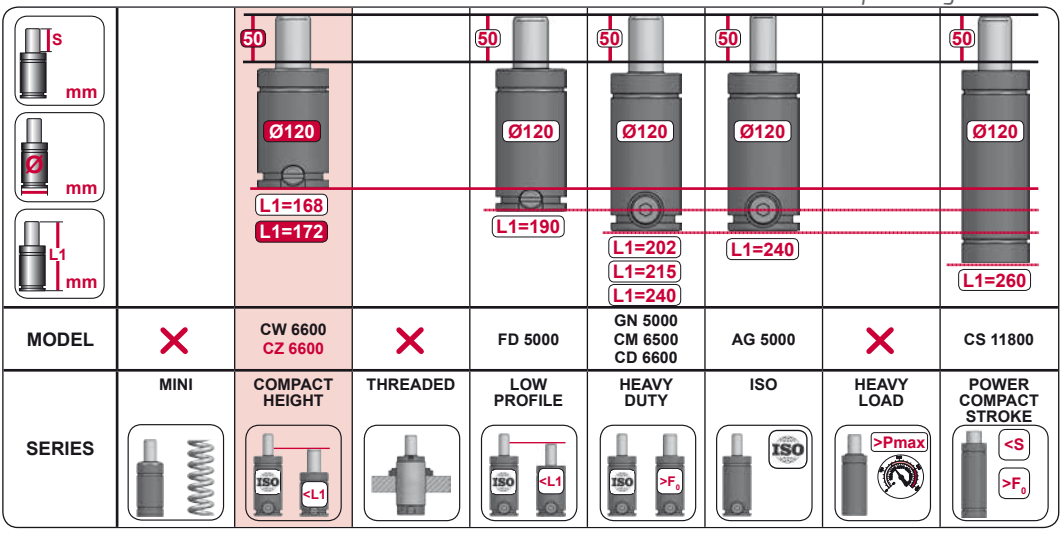


| MODEL | | CW 6600<br>CZ 6600 | | FD 5000 | GN 5000<br>CM 6500<br>CD 6600 | AG 5000 | | CS 11800 |
|---|---|---|---|---|---|---|---|---|
| SERIES | MINI | COMPACT HEIGHT | THREADED | LOW PROFILE | HEAVY DUTY | ISO | HEAVY LOAD | POWER COMPACT STROKE |




| CODE | | CZ 6600 050 | KIT XXXXXXX-S<br>KIT XXXXXXX-C | A14-120 | 18 GA 5 |
|---|---|---|---|---|---|
| ENG | ORDER | GAS SPRING | REPAIR KIT | FLANGE | CHARGING ADAPTER |
| DEU | BESTELLUNG | GASDRUCKFEDER | ERSATZTEILSATZ | FLANSCHE | LADEADAPTER |
| FRA | COMMANDE | RESSORT À GAZ | KIT DE RÉPARATION | BRIDE | RACCORD DE CHARGE |
| ITA | ORDINE | CILINDRO AD AZOTO | KIT DI MANUTENZIONE | FLANGE | ADATTATORE DI CARICO |
| ESP | PEDIDO | RESORTE DE GAS | KIT DE REPARACION | BRIDA | ADAPTADOR DE CARGA |
| POR | PEDIDO | CILINDRO DE GÁS | KIT DE MANUTENÇÃO | FLANGE | ADAPTADOR DE CARGA |

# CZ 6600 MOUNTS

*Compact Height*

AZOL GAS

## A14-120

E24.54.815.G
EM24.54.700/F

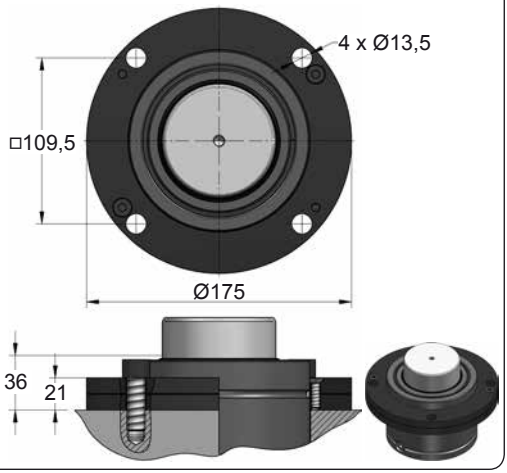


## A34-120

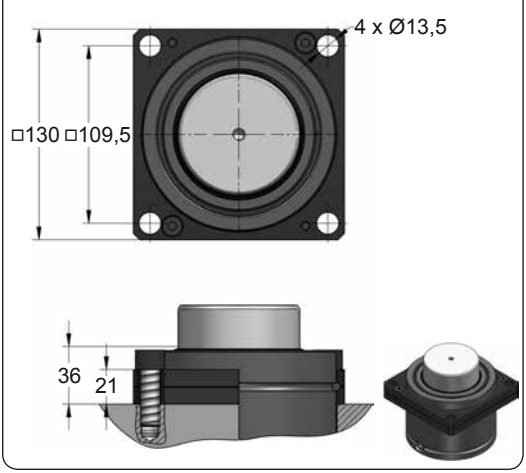


## A94-120

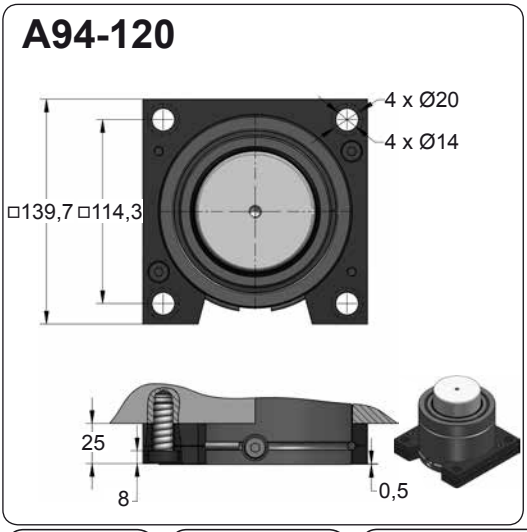


## B56-120

SMS DKH 3221n

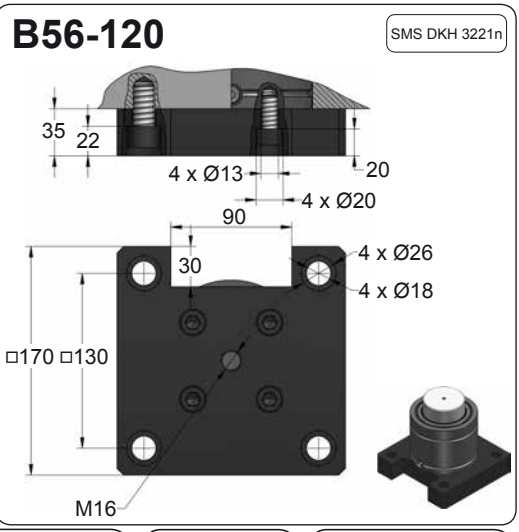









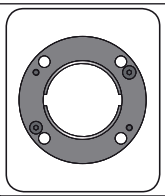

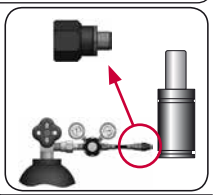

| CODE | | CZ 6600 050 | KIT XXXXXXX-S<br>KIT XXXXXXX-C | A14-120 | 18 GA 5 |
|---|---|---|---|---|---|
| ENG | ORDER | GAS SPRING | REPAIR KIT | FLANGE | CHARGING ADAPTER |
| DEU | BESTELLUNG | GASDRUCKFEDER | ERSATZTEILSATZ | FLANSCHE | LADEADAPTER |
| FRA | COMMANDE | RESSORT À GAZ | KIT DE RÉPARATION | BRIDE | RACCORD DE CHARGE |
| ITA | ORDINE | CILINDRO AD AZOTO | KIT DI MANUTENZIONE | FLANGE | ADATTATORE DI CARICO |
| ESP | PEDIDO | RESORTE DE GAS | KIT DE REPARACION | BRIDA | ADAPTADOR DE CARGA |
| POR | PEDIDO | CILINDRO DE GÁS | KIT DE MANUTENÇÃO | FLANGE | ADAPTADOR DE CARGA |

AZOL GAS

# CZ 6600 MOUNTS

*Compact Height*

## B61-120

SMS DKH 3221n

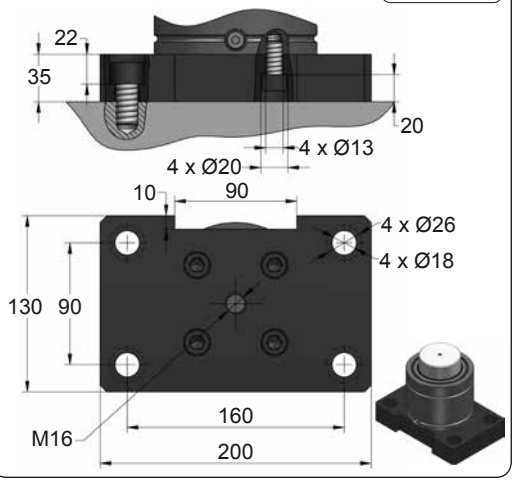


## B66-120

SMS DKH 3221n

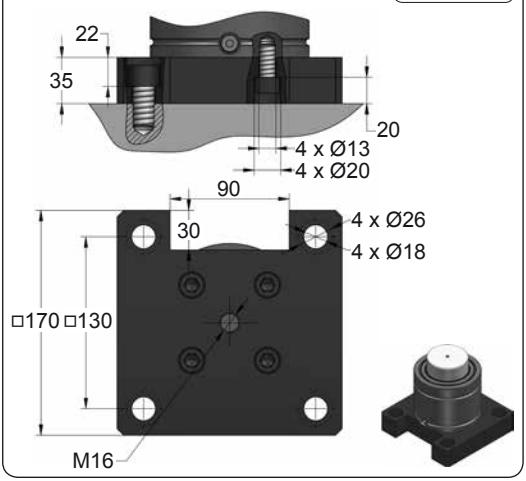


## B71-120

SMS DKH 3221n

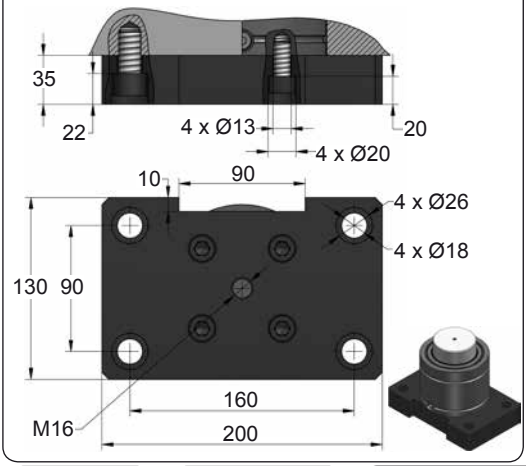









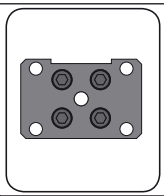

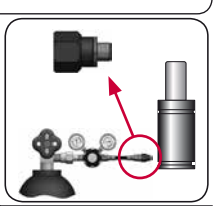

| CODE | | CZ 6600 050 | KIT XXXXXXX-S<br>KIT XXXXXXX-C | B61-120 | 18 GA 5 |
|---|---|---|---|---|---|
| ENG | ORDER | GAS SPRING | REPAIR KIT | FLANGE | CHARGING ADAPTER |
| DEU | BESTELLUNG | GASDRUCKFEDER | ERSATZTEILSATZ | FLANSCHE | LADEADAPTER |
| FRA | COMMANDE | RESSORT À GAZ | KIT DE RÉPARATION | BRIDE | RACCORD DE CHARGE |
| ITA | ORDINE | CILINDRO AD AZOTO | KIT DI MANUTENZIONE | FLANGE | ADATTATORE DI CARICO |
| ESP | PEDIDO | RESORTE DE GAS | KIT DE REPARACION | BRIDA | ADAPTADOR DE CARGA |
| POR | PEDIDO | CILINDRO DE GÁS | KIT DE MANUTENÇÃO | FLANGE | ADAPTADOR DE CARGA |

# CZ 9500

*Compact Height*

TOYOTA SMS DKH 3221n

AZOL GAS

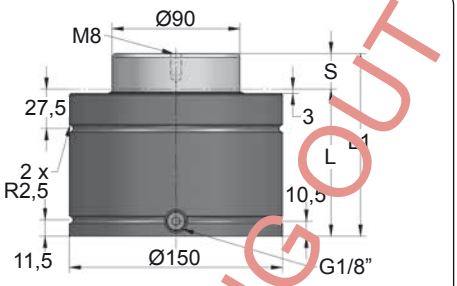


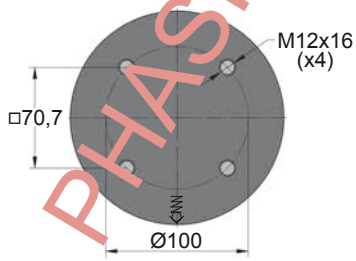


PHASING OUT

| ORDER | S (mm) | L1 ±0,25 (mm) | L (mm) | Kg. |
|---|---|---|---|---|
| CZ 9500 016 | 16 | 110 | 94 | 10.86 |
| CZ 9500 019 | 19 | 116 | 97 | 11.11 |
| CZ 9500 025 | 25 | 128 | 103 | 11.60 |
| CZ 9500 032 | 32 | 142 | 110 | 12.18 |
| CZ 9500 038 | 38 | 154 | 116 | 12.67 |
| CZ 9500 050 | 50 | 178 | 128 | 13.66 |
| CZ 9500 063 | 63 | 204 | 141 | 14.73 |
| CZ 9500 075 | 75 | 228 | 153 | 15.72 |
| CZ 9500 080 | 80 | 238 | 158 | 16.14 |
| CZ 9500 100 | 100 | 278 | 178 | 17.78 |
| CZ 9500 125 | 125 | 328 | 203 | 19.85 |

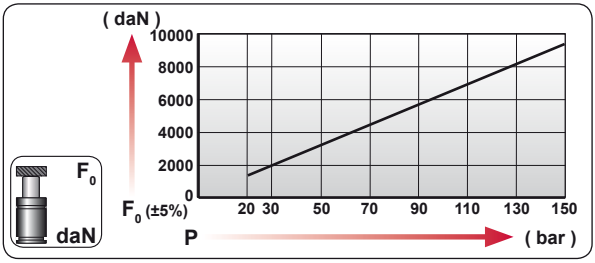


| CODE | bar | psi | $F_0$ daN | $F_1$ daN |
|---|---|---|---|---|
| CZ 9500 050 | 150 | 2175 | 9540 | 16821 |
| CZ-H 9500 050 | 0 | 0 | --- | --- |

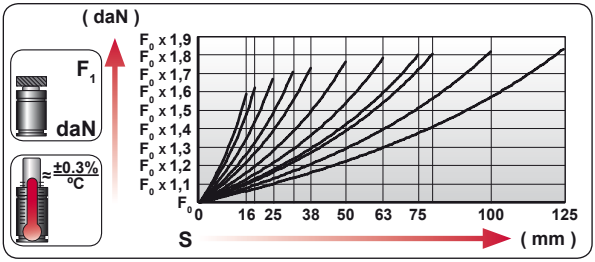


| | |
|---|---|
| ENG | ORDER |
| DEU | BESTELLUNG |
| FRA | COMMANDE |
| ITA | ORDINE |
| ESP | PEDIDO |
| POR | PEDIDO |

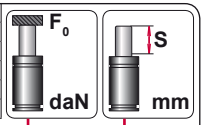


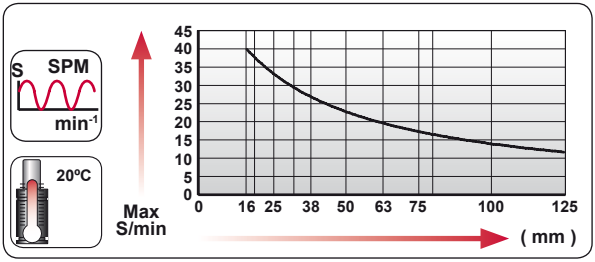


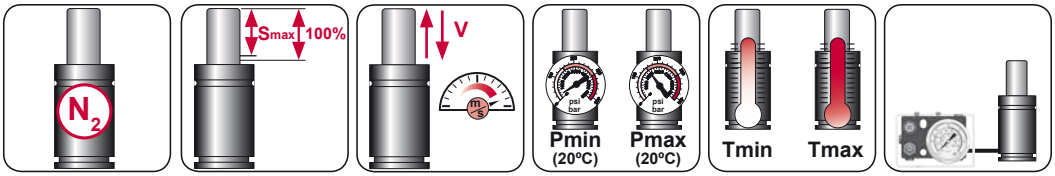


| $N_2$ | Smax < 90% | Vmax 1,6 m/s | bar psi 20 290 | bar psi 150 2175 | °C °F 0 32 | °C °F 80 176 | 600 CP- |
|---|---|---|---|---|---|---|---|

AZOL GAS

# CZ 9500

*Compact Height*

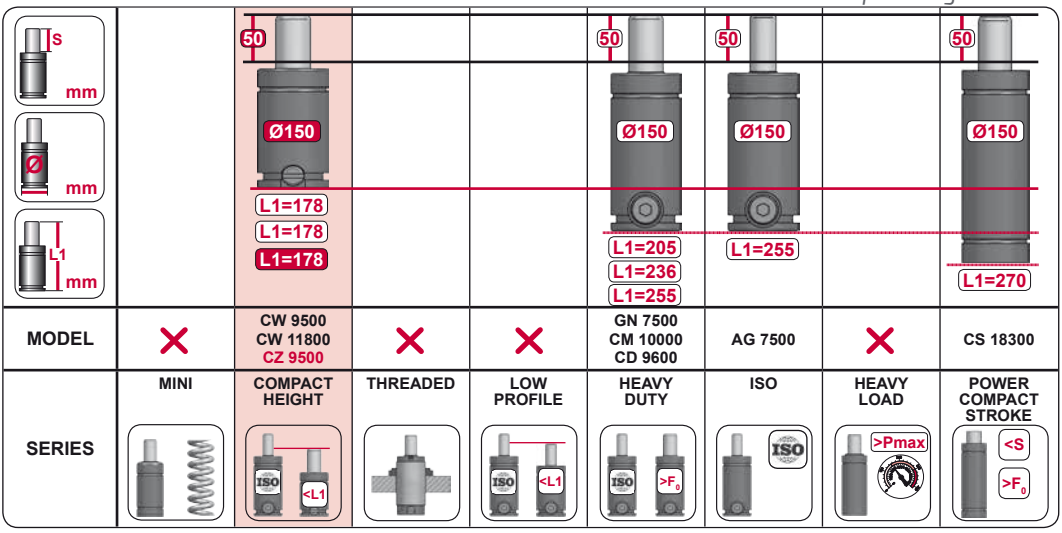


| | | | | | | | | |
|---|---|---|---|---|---|---|---|---|
| **MODEL** | ✕ | CW 9500<br>CW 11800<br>CZ 9500 | ✕ | ✕ | GN 7500<br>CM 10000<br>CD 9600 | AG 7500 | ✕ | CS 18300 |
| **SERIES** | MINI | COMPACT HEIGHT | THREADED | LOW PROFILE | HEAVY DUTY | ISO | HEAVY LOAD | POWER COMPACT STROKE |








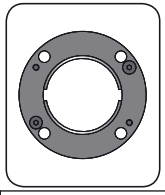

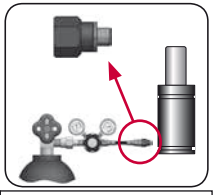

| CODE | | CZ 9500 050 | KIT XXXXXXX-S<br>KIT XXXXXXX-C | A14-150 | 18 GA 5 |
|---|---|---|---|---|---|
| ENG | ORDER | GAS SPRING | REPAIR KIT | FLANGE | CHARGING ADAPTER |
| DEU | BESTELLUNG | GASDRUCKFEDER | ERSATZTEILSATZ | FLANSCHE | LADEADAPTER |
| FRA | COMMANDE | RESSORT À GAZ | KIT DE RÉPARATION | BRIDE | RACCORD DE CHARGE |
| ITA | ORDINE | CILINDRO AD AZOTO | KIT DI MANUTENZIONE | FLANGE | ADATTATORE DI CARICO |
| ESP | PEDIDO | RESORTE DE GAS | KIT DE REPARACION | BRIDA | ADAPTADOR DE CARGA |
| POR | PEDIDO | CILINDRO DE GÁS | KIT DE MANUTENÇÃO | FLANGE | ADAPTADOR DE CARGA |

# CZ 9500 MOUNTS

*Compact Height*

AZOL GAS

## A14-150

E24.54.815.G
EM24.54.700/F

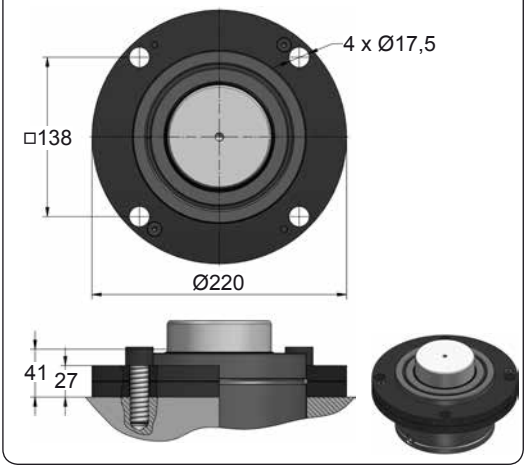


## A94-150

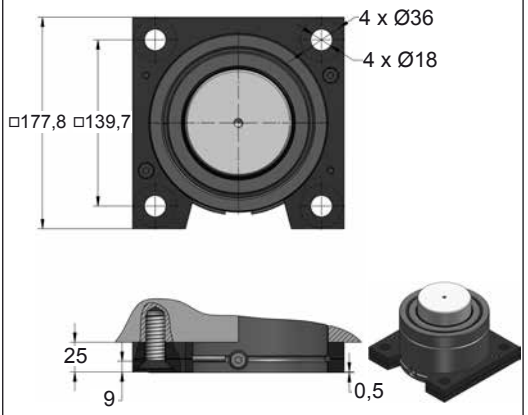


## B56-150

SMS DKH 3221n

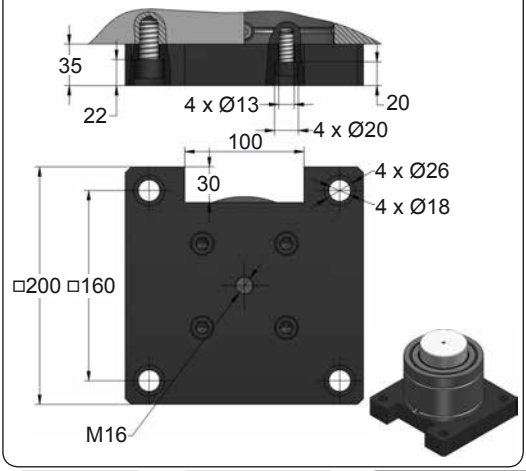


## B61-150

SMS DKH 3221n

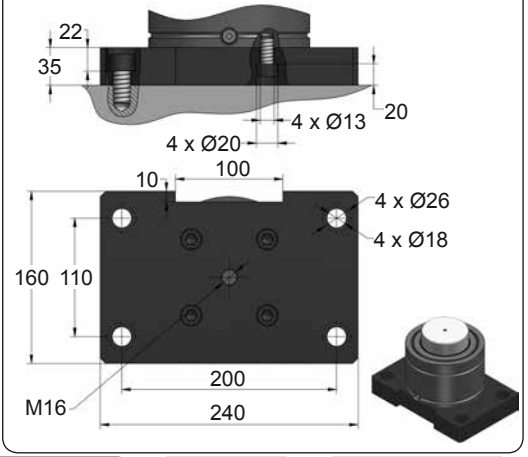









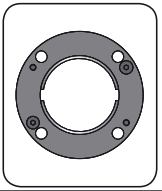

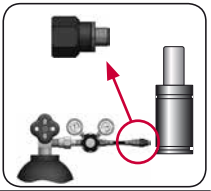

| CODE | | CZ 9500 050 | KIT XXXXXXX-S<br>KIT XXXXXXX-C | A14-150 | 18 GA 5 |
|---|---|---|---|---|---|
| ENG | ORDER | GAS SPRING | REPAIR KIT | FLANGE | CHARGING ADAPTER |
| DEU | BESTELLUNG | GASDRUCKFEDER | ERSATZTEILSATZ | FLANSCHE | LADEADAPTER |
| FRA | COMMANDE | RESSORT À GAZ | KIT DE RÉPARATION | BRIDE | RACCORD DE CHARGE |
| ITA | ORDINE | CILINDRO AD AZOTO | KIT DI MANUTENZIONE | FLANGE | ADATTATORE DI CARICO |
| ESP | PEDIDO | RESORTE DE GAS | KIT DE REPARACION | BRIDA | ADAPTADOR DE CARGA |
| POR | PEDIDO | CILINDRO DE GÁS | KIT DE MANUTENÇÃO | FLANGE | ADAPTADOR DE CARGA |

AZOL GAS

# CZ 9500 MOUNTS

*Compact Height*

## B66-150

SMS DKH 3221n

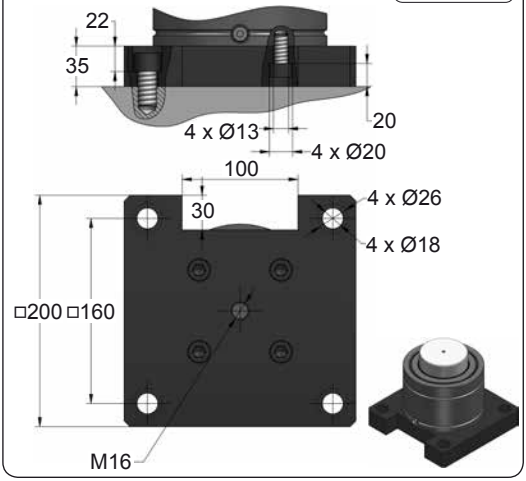


## B71-150

SMS DKH 3221n

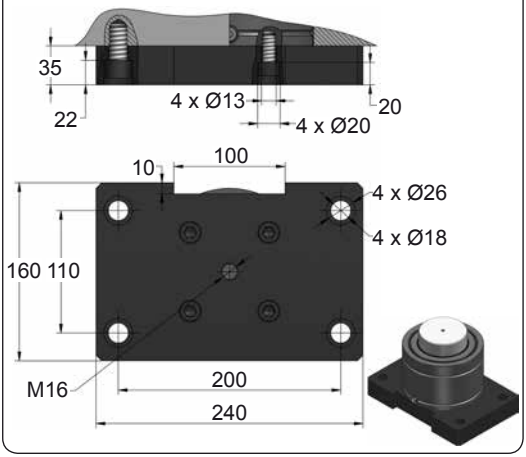









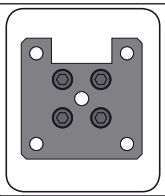

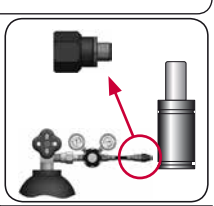

| CODE | | CZ 9500 050 | KIT XXXXXXX-S<br>KIT XXXXXXX-C | B66-150 | 18 GA 5 |
|---|---|---|---|---|---|
| ENG | ORDER | GAS SPRING | REPAIR KIT | FLANGE | CHARGING ADAPTER |
| DEU | BESTELLUNG | GASDRUCKFEDER | ERSATZTEILSATZ | FLANSCHE | LADEADAPTER |
| FRA | COMMANDE | RESSORT À GAZ | KIT DE RÉPARATION | BRIDE | RACCORD DE CHARGE |
| ITA | ORDINE | CILINDRO AD AZOTO | KIT DI MANUTENZIONE | FLANGE | ADATTATORE DI CARICO |
| ESP | PEDIDO | RESORTE DE GAS | KIT DE REPARACION | BRIDA | ADAPTADOR DE CARGA |
| POR | PEDIDO | CILINDRO DE GÁS | KIT DE MANUTENÇÃO | FLANGE | ADAPTADOR DE CARGA |

AZOL GAS

# KZ COMPACT HEIGHT LARGE

| MODEL | $F_0$ | Ø | S | L1 | Pmax | Charge Port | | |
|---|---|---|---|---|---|---|---|---|
| KZ 350 | 350 | Ø32 | 10 - 125 | 60 - 290 | 180 | M6 | ✓ | ✓ |
| KZ 500 | 500 | Ø38 | 10 - 125 | 60 - 290 | 150 | M6 | ✓ | ✓ |
| KZ 750 | 750 | Ø45 | 10 - 125 | 67 - 297 | 150 | G1/8" | ✓ | ✓ |
| KZ 1000 | 1000 | Ø50 | 13 - 125 | 78 - 302 | 150 | G1/8" | ✓ | ✓ |
| KZ 1500 | 1500 | Ø63 | 13 - 125 | 78 - 302 | 150 | G1/8" | ✓ | ✓ |
| KZ 2400 | 2400 | Ø75 | 16 - 125 | 91 - 309 | 150 | G1/8" | ✓ | ✓ |
| KZ 4200 | 4200 | Ø95 | 16 - 125 | 94 - 312 | 150 | G1/8" | ✓ | ✓ |
| KZ 6600 | 6600 | Ø120 | 16 - 125 | 104 - 322 | 150 | G1/8" | ✓ | ✓ |

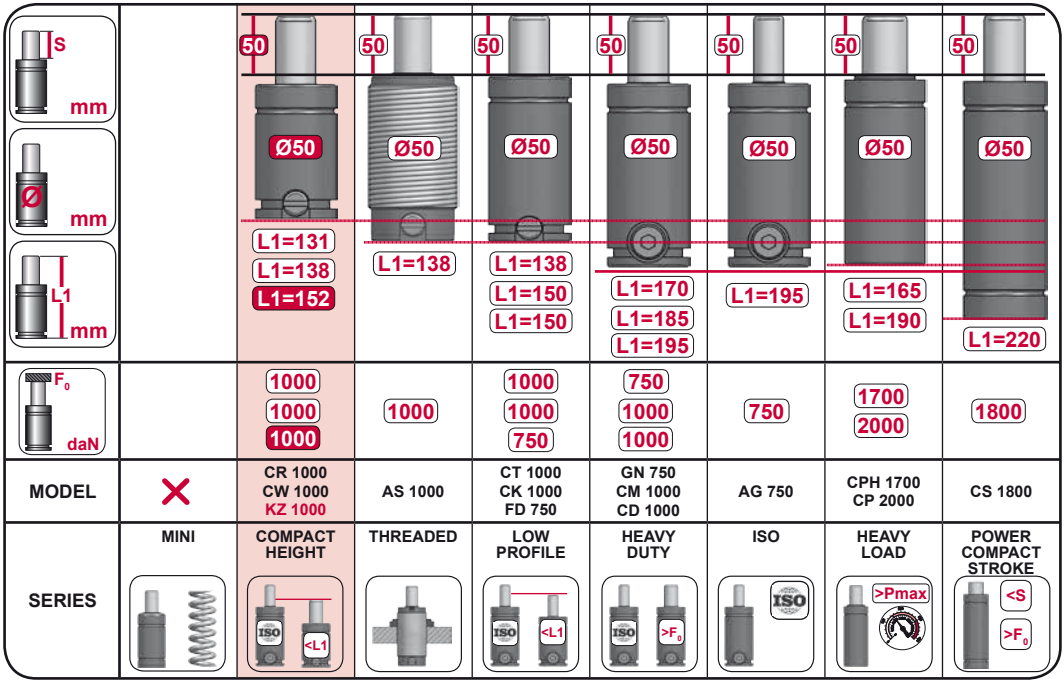

# KZ 350

*Compact Height*

AZOL GAS

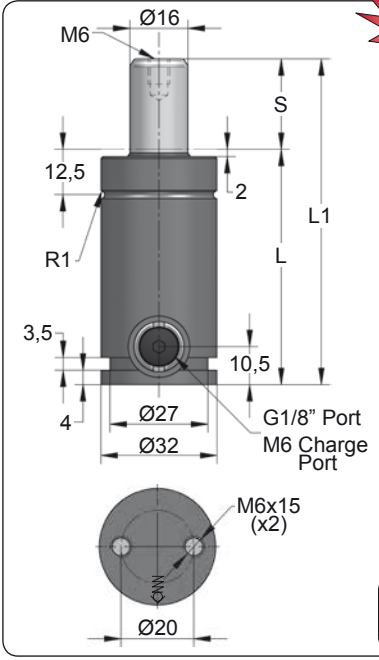


Newt

| ORDER | S (mm) | L1 ±0.25 (mm) | L (mm) | Kg. |
|---|---|---|---|---|
| KZ 350 010 | 10 | 60 | 50 | 0.23 |
| KZ 350 013 | 13 | 66 | 53 | 0.24 |
| KZ 350 016 | 16 | 72 | 56 | 0.25 |
| KZ 350 019 | 19 | 78 | 59 | 0.26 |
| KZ 350 025 | 25 | 90 | 65 | 0.28 |
| KZ 350 032 | 32 | 104 | 72 | 0.31 |
| KZ 350 038 | 38 | 116 | 78 | 0.33 |
| KZ 350 050 | 50 | 140 | 90 | 0.37 |
| KZ 350 063 | 63 | 166 | 103 | 0.41 |
| KZ 350 075 | 75 | 190 | 115 | 0.45 |
| KZ 350 080 | 80 | 200 | 120 | 0.47 |
| KZ 350 100 | 100 | 240 | 140 | 0.54 |
| KZ 350 125 | 125 | 290 | 165 | 0.62 |

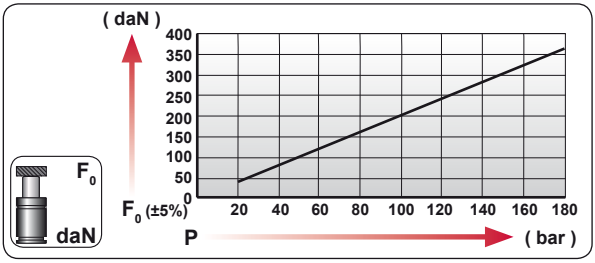


| CODE | bar | psi | $F_0$ daN | $F_1$ daN |
|---|---|---|---|---|
| KZ 350 050 | 180 | 2610 | 360 | 550 |
| KZ-H 350 050 | 0 | 0 | --- | --- |

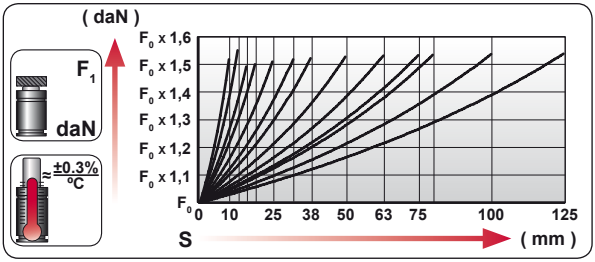


| | |
|---|---|
| ENG | ORDER |
| DEU | BESTELLUNG |
| FRA | COMMANDE |
| ITA | ORDINE |
| ESP | PEDIDO |
| POR | PEDIDO |

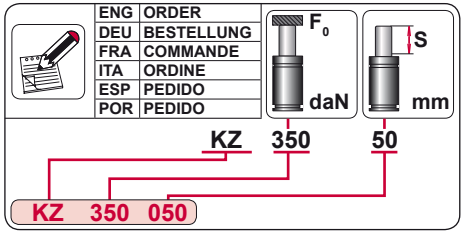


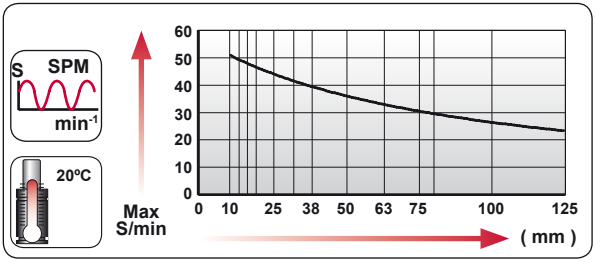


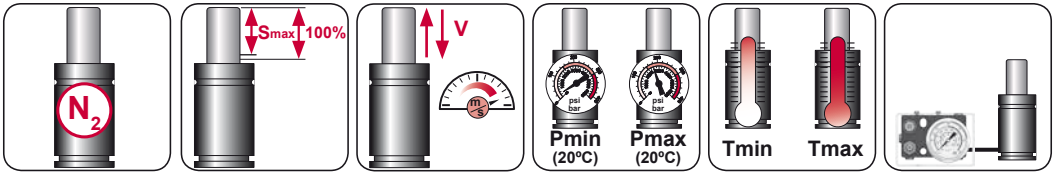


| $N_2$ | Smax < 90% | Vmax 1,6 m/s | bar psi 20 290 | bar psi 180 2610 | °C °F 0 32 | °C °F 80 176 | 600 CP- |
|---|---|---|---|---|---|---|---|

AZOL GAS

# KZ 350 MOUNTS

*Compact Height*

## A14-032

ISO E24.54.815.G EM24.54.700/F

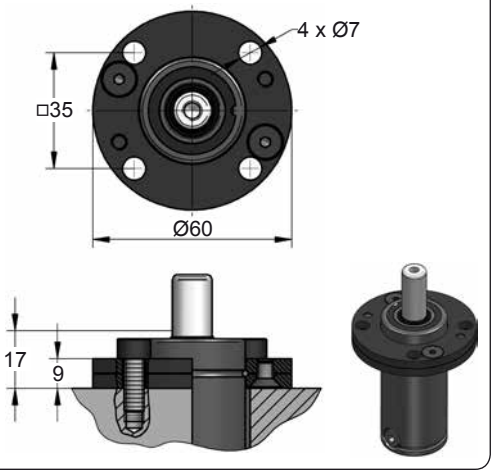


## A34-032

VDI

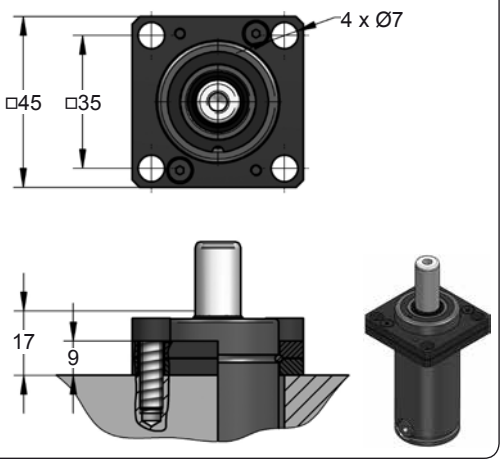


## C05-032

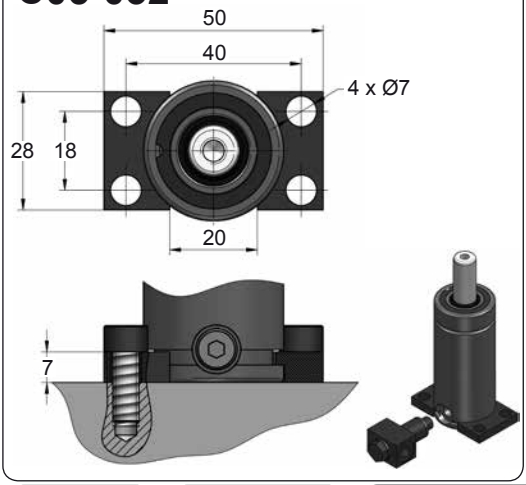


## D02-032

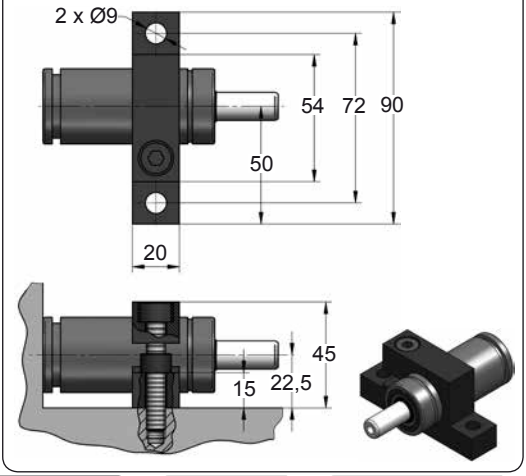









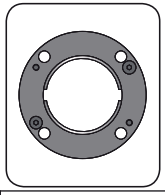

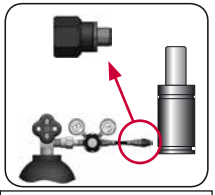

| CODE | | KZ 350 050 | KIT XXXXXXX-S<br>KIT XXXXXXX-C | A14-032 | 06 GA 11 |
|---|---|---|---|---|---|
| ENG | ORDER | GAS SPRING | REPAIR KIT | FLANGE | CHARGING ADAPTER |
| DEU | BESTELLUNG | GASDRUCKFEDER | ERSATZTEILSATZ | FLANSCHE | LADEADAPTER |
| FRA | COMMANDE | RESSORT À GAZ | KIT DE RÉPARATION | BRIDE | RACCORD DE CHARGE |
| ITA | ORDINE | CILINDRO AD AZOTO | KIT DI MANUTENZIONE | FLANGE | ADATTATORE DI CARICO |
| ESP | PEDIDO | RESORTE DE GAS | KIT DE REPARACION | BRIDA | ADAPTADOR DE CARGA |
| POR | PEDIDO | CILINDRO DE GÁS | KIT DE MANUTENÇÃO | FLANGE | ADAPTADOR DE CARGA |

# KZ 500

*Compact Height*

AZOL GAS

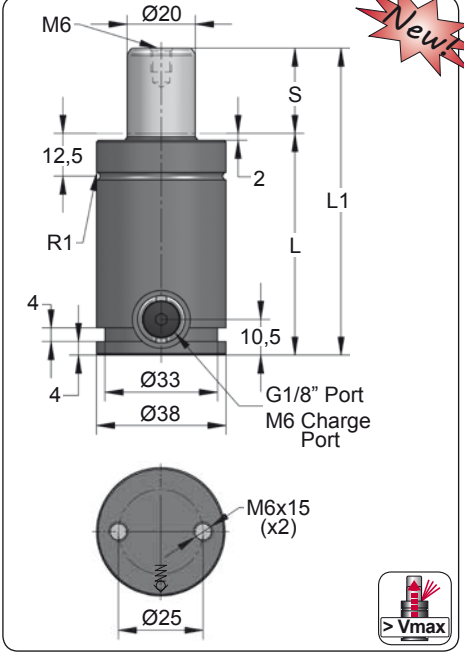


Newt

| ORDER | S (mm) | L1 ±0.25 (mm) | L (mm) | Kg. |
|---|---|---|---|---|
| KZ 500 010 | 10 | 60 | 50 | 0.24 |
| KZ 500 013 | 13 | 66 | 53 | 0.25 |
| KZ 500 016 | 16 | 72 | 56 | 0.26 |
| KZ 500 019 | 19 | 78 | 59 | 0.27 |
| KZ 500 025 | 25 | 90 | 65 | 0.30 |
| KZ 500 032 | 32 | 104 | 72 | 0.32 |
| KZ 500 038 | 38 | 116 | 78 | 0.35 |
| KZ 500 050 | 50 | 140 | 90 | 0.40 |
| KZ 500 063 | 63 | 166 | 103 | 0.45 |
| KZ 500 075 | 75 | 190 | 115 | 0.50 |
| KZ 500 080 | 80 | 200 | 120 | 0.52 |
| KZ 500 100 | 100 | 240 | 140 | 0.60 |
| KZ 500 125 | 125 | 290 | 165 | 0.70 |

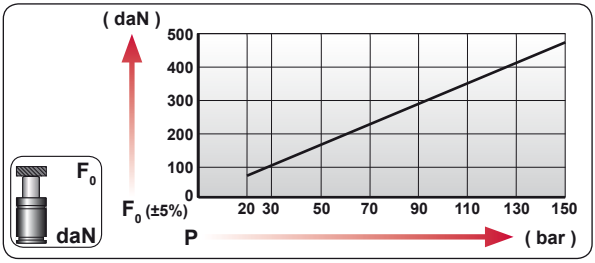


| CODE | bar | psi | $F_0$ daN | $F_1$ daN |
|---|---|---|---|---|
| KZ 500 050 | 150 | 2175 | 470 | 700 |
| KZ-H 500 050 | 0 | 0 | --- | --- |

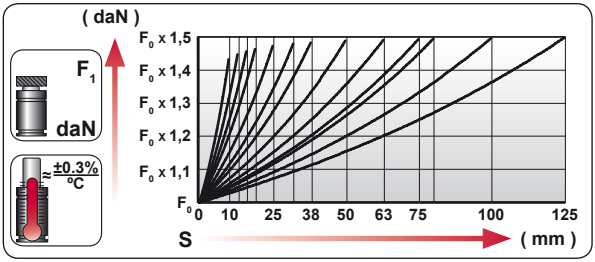


| ENG | ORDER |
|---|---|
| DEU | BESTELLUNG |
| FRA | COMMANDE |
| ITA | ORDINE |
| ESP | PEDIDO |
| POR | PEDIDO |

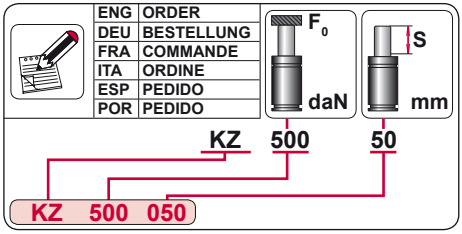


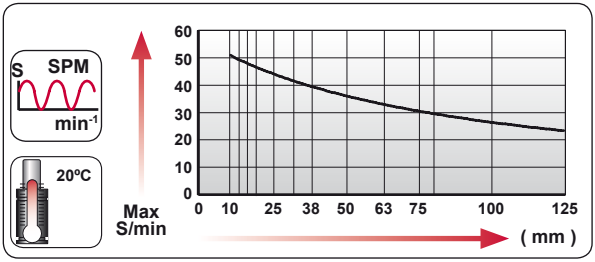


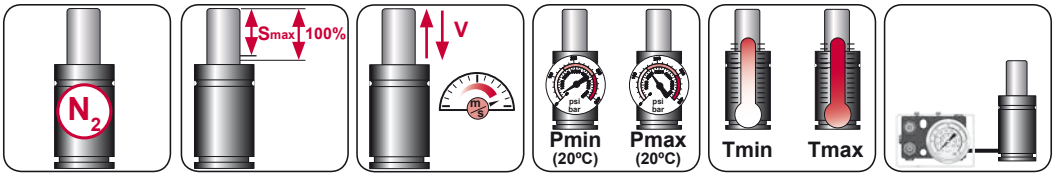


| $N_2$ | Smax < 90% | Vmax 1,6 m/s | bar psi 20 290 | bar psi 150 2175 | °C °F 0 32 | °C °F 80 176 | 600 CP- |
|---|---|---|---|---|---|---|---|

AZOL GAS

# KZ 500 MOUNTS

*Compact Height*

## A14-038

ISO · E24.54.815.G · EM24.54.700/F

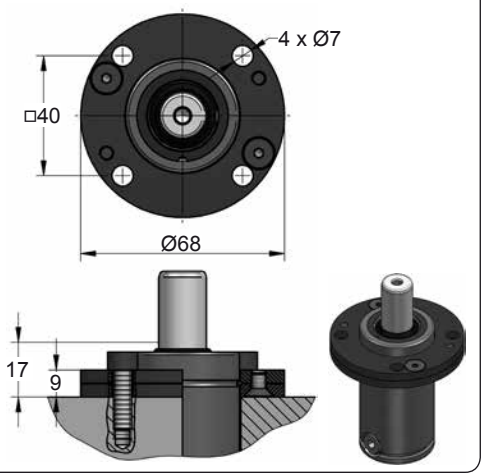


## A34-038

ISO · VDI

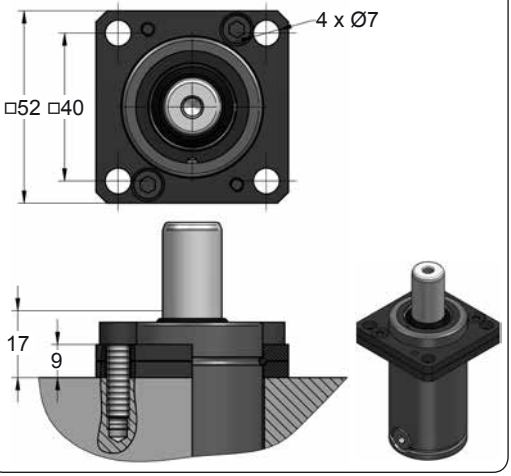


## C05-038

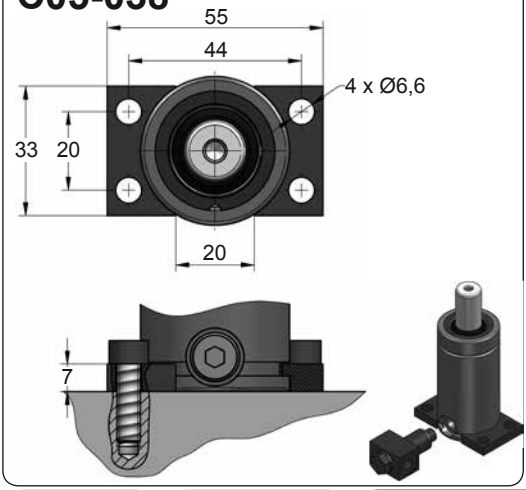


## D02-038

E24.54.815.G

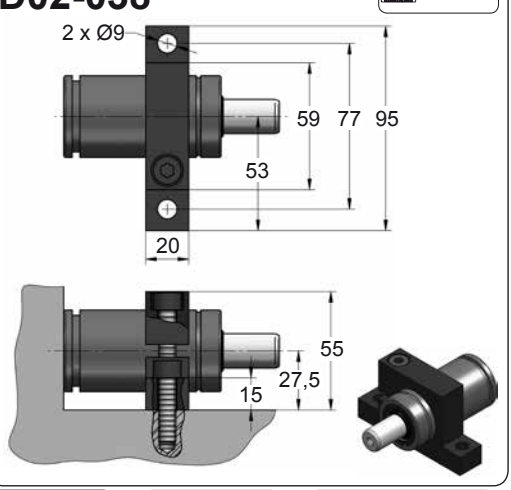









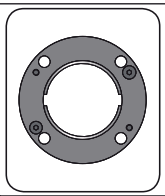

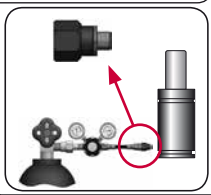

| CODE | | KZ 500 050 | KIT XXXXXXX-S<br>KIT XXXXXXX-C | A14-038 | 06 GA 11 |
|---|---|---|---|---|---|
| ENG | ORDER | GAS SPRING | REPAIR KIT | FLANGE | CHARGING ADAPTER |
| DEU | BESTELLUNG | GASDRUCKFEDER | ERSATZTEILSATZ | FLANSCHE | LADEADAPTER |
| FRA | COMMANDE | RESSORT À GAZ | KIT DE RÉPARATION | BRIDE | RACCORD DE CHARGE |
| ITA | ORDINE | CILINDRO AD AZOTO | KIT DI MANUTENZIONE | FLANGE | ADATTATORE DI CARICO |
| ESP | PEDIDO | RESORTE DE GAS | KIT DE REPARACION | BRIDA | ADAPTADOR DE CARGA |
| POR | PEDIDO | CILINDRO DE GÁS | KIT DE MANUTENÇÃO | FLANGE | ADAPTADOR DE CARGA |

# KZ 750

*Compact Height*

AZOL GAS

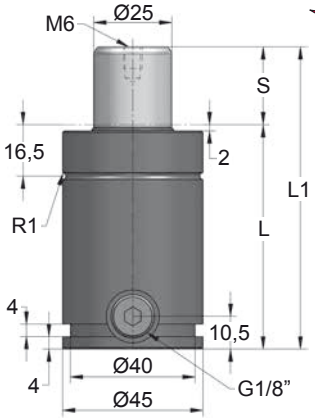


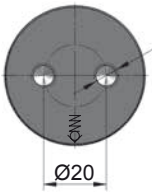


> Vmax

| ORDER | S (mm) | L1 ±0.25 (mm) | L (mm) | Kg. |
|---|---|---|---|---|
| KZ 750 010 | 10 | 67 | 57 | 0.54 |
| KZ 750 013 | 13 | 73 | 60 | 0.56 |
| KZ 750 016 | 16 | 79 | 63 | 0.58 |
| KZ 750 019 | 19 | 85 | 66 | 0.59 |
| KZ 750 025 | 25 | 97 | 72 | 0.63 |
| KZ 750 032 | 32 | 111 | 79 | 0.67 |
| KZ 750 038 | 38 | 123 | 85 | 0.71 |
| KZ 750 050 | 50 | 147 | 97 | 0.79 |
| KZ 750 063 | 63 | 173 | 110 | 0.87 |
| KZ 750 075 | 75 | 197 | 122 | 0.94 |
| KZ 750 080 | 80 | 207 | 127 | 0.97 |
| KZ 750 100 | 100 | 247 | 147 | 1.10 |
| KZ 750 125 | 125 | 297 | 172 | 1.25 |

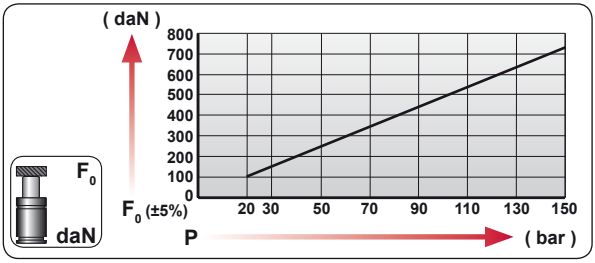


| CODE | bar | psi | F0 daN | F1 daN |
|---|---|---|---|---|
| KZ 750 050 | 150 | 2175 | 735 | 1150 |
| KZ-H 750 050 | 0 | 0 | --- | --- |

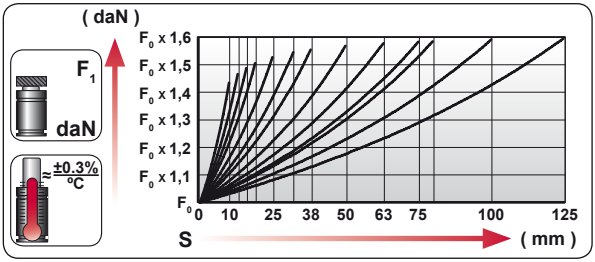


| ENG | ORDER |
|---|---|
| DEU | BESTELLUNG |
| FRA | COMMANDE |
| ITA | ORDINE |
| ESP | PEDIDO |
| POR | PEDIDO |

F0 daN S mm

KZ 750 50

KZ 750 050

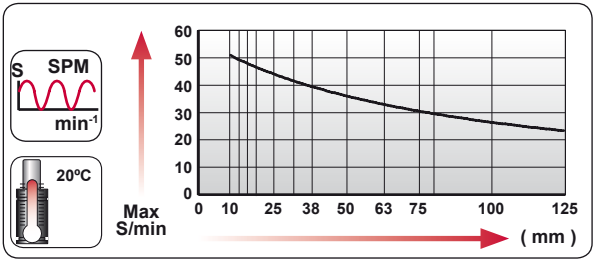


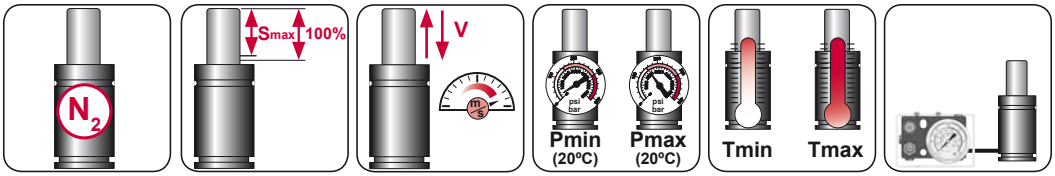


| $N_2$ | Smax < 90% | Vmax 1,6 m/s | bar psi 20 290 | bar psi 150 2175 | ºC ºF 0 32 | ºC ºF 80 176 | 600 CP- |
|---|---|---|---|---|---|---|---|

AZOL GAS

# KZ 750 MOUNTS

*Compact Height*

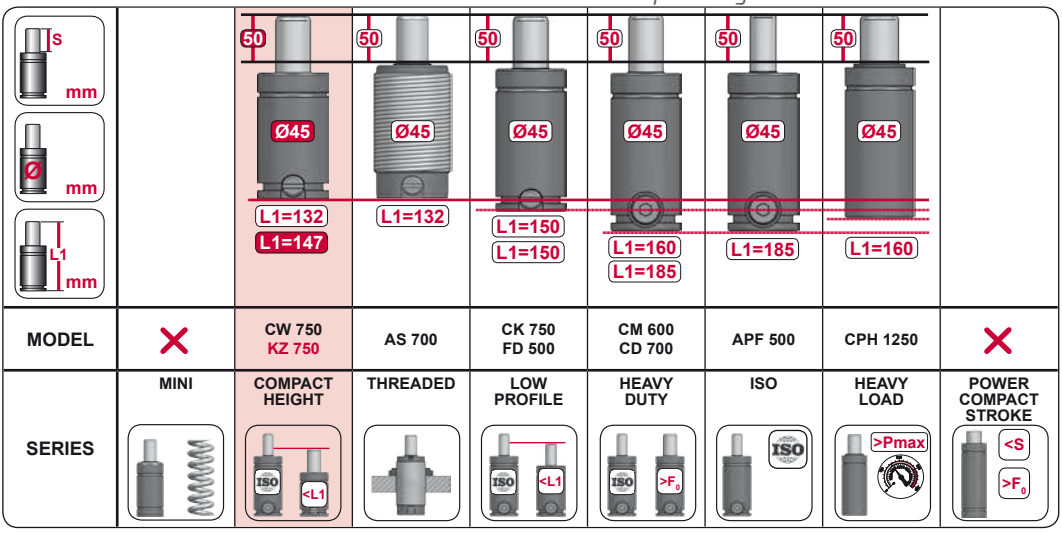


| MODEL | | CW 750 KZ 750 | AS 700 | CK 750 FD 500 | CM 600 CD 700 | APF 500 | CPH 1250 | |
|---|---|---|---|---|---|---|---|---|
| SERIES | MINI | COMPACT HEIGHT | THREADED | LOW PROFILE | HEAVY DUTY | ISO | HEAVY LOAD | POWER COMPACT STROKE |

## A14-045

E24.54.815.G
EM24.54.700/F

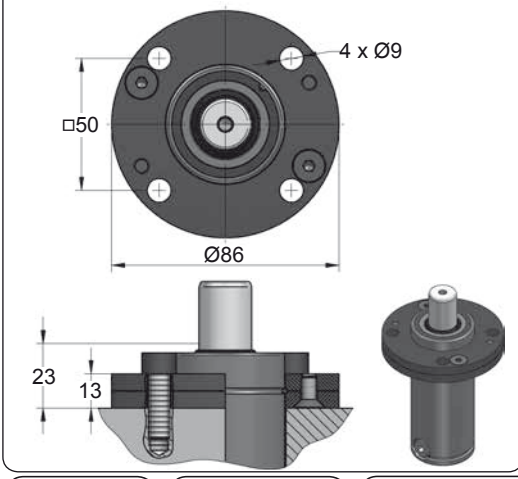


## A34-045

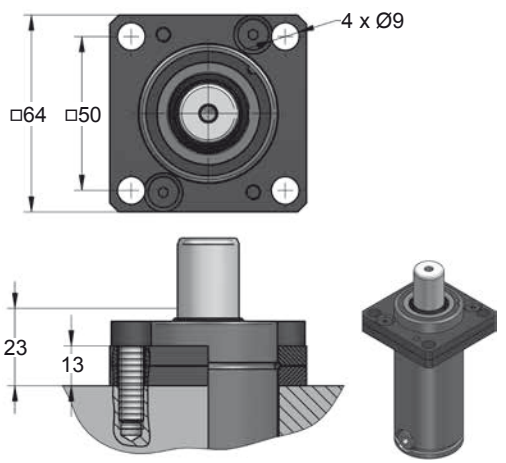









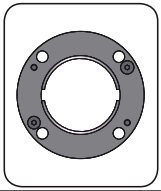

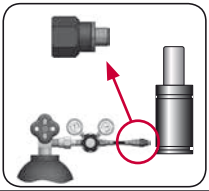

| CODE | | KZ 750 050 | KIT XXXXXXX-S KIT XXXXXXX-C | A14-045 | 18 GA 5 |
|---|---|---|---|---|---|
| ENG | ORDER | GAS SPRING | REPAIR KIT | FLANGE | CHARGING ADAPTER |
| DEU | BESTELLUNG | GASDRUCKFEDER | ERSATZTEILSATZ | FLANSCHE | LADEADAPTER |
| FRA | COMMANDE | RESSORT À GAZ | KIT DE RÉPARATION | BRIDE | RACCORD DE CHARGE |
| ITA | ORDINE | CILINDRO AD AZOTO | KIT DI MANUTENZIONE | FLANGE | ADATTATORE DI CARICO |
| ESP | PEDIDO | RESORTE DE GAS | KIT DE REPARACION | BRIDA | ADAPTADOR DE CARGA |
| POR | PEDIDO | CILINDRO DE GÁS | KIT DE MANUTENÇÃO | FLANGE | ADAPTADOR DE CARGA |

# KZ 750 MOUNTS

*Compact Height*

AZOL GAS

## B36-045

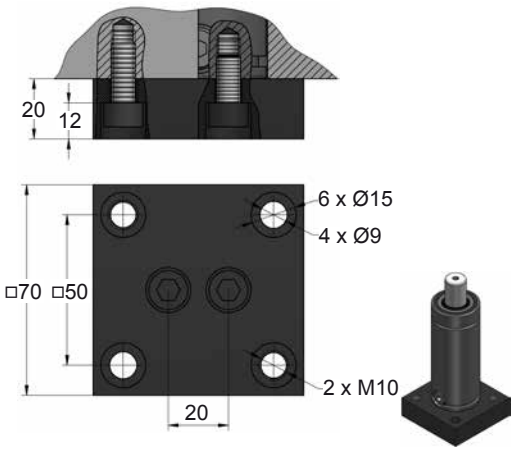


## B41-045

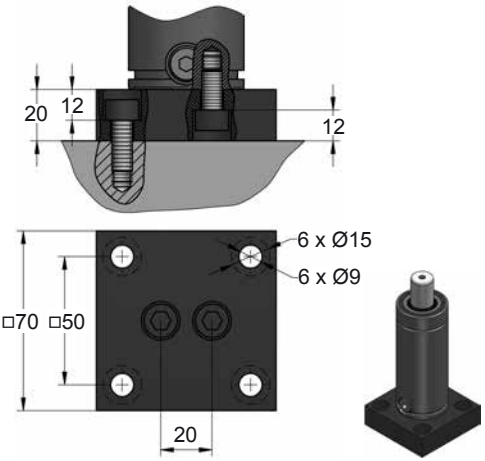


## C05-045

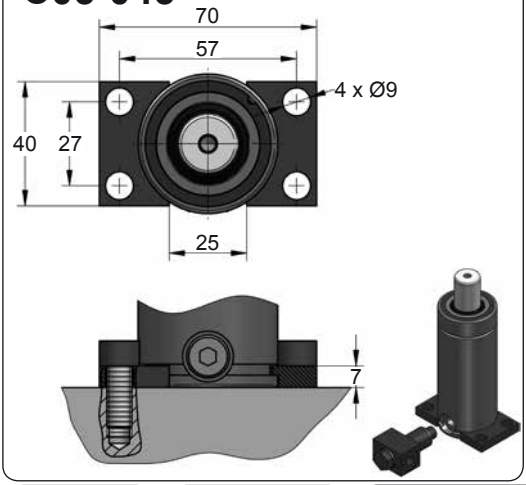


## C20-045

ISO VDI E24.54.815.G EM24.54.700/F

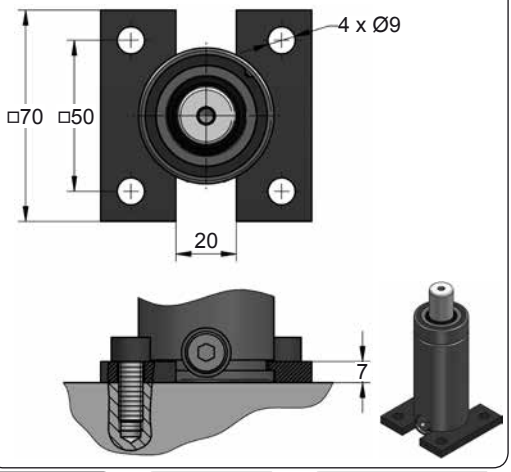









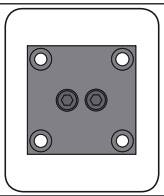

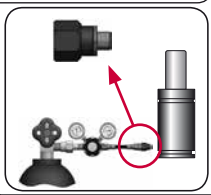

| CODE | | KZ 750 050 | KIT XXXXXXX-S<br>KIT XXXXXXX-C | B36-045 | 18 GA 5 |
|---|---|---|---|---|---|
| ENG | ORDER | GAS SPRING | REPAIR KIT | FLANGE | CHARGING ADAPTER |
| DEU | BESTELLUNG | GASDRUCKFEDER | ERSATZTEILSATZ | FLANSCHE | LADEADAPTER |
| FRA | COMMANDE | RESSORT À GAZ | KIT DE RÉPARATION | BRIDE | RACCORD DE CHARGE |
| ITA | ORDINE | CILINDRO AD AZOTO | KIT DI MANUTENZIONE | FLANGE | ADATTATORE DI CARICO |
| ESP | PEDIDO | RESORTE DE GAS | KIT DE REPARACION | BRIDA | ADAPTADOR DE CARGA |
| POR | PEDIDO | CILINDRO DE GÁS | KIT DE MANUTENÇÃO | FLANGE | ADAPTADOR DE CARGA |

AZOL GAS

# KZ 750 MOUNTS

*Compact Height*

## D02-045

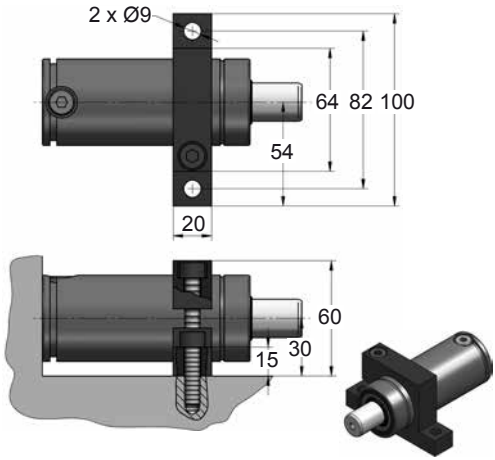


## D67-045

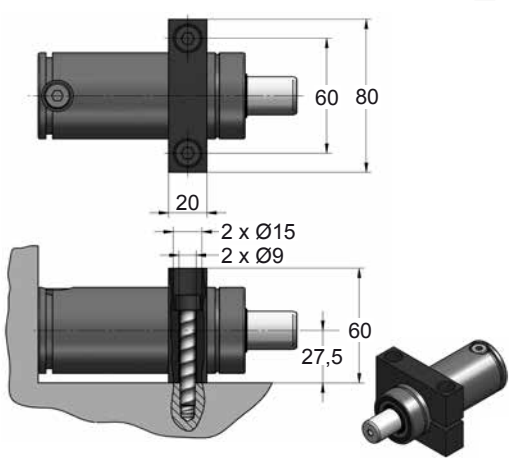









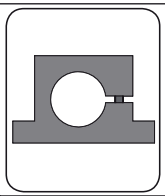

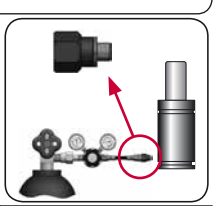

| CODE | | KZ 750 050 | KIT XXXXXXX-S<br>KIT XXXXXXX-C | D02-045 | 18 GA 5 |
|---|---|---|---|---|---|
| ENG | ORDER | GAS SPRING | REPAIR KIT | FLANGE | CHARGING ADAPTER |
| DEU | BESTELLUNG | GASDRUCKFEDER | ERSATZTEILSATZ | FLANSCHE | LADEADAPTER |
| FRA | COMMANDE | RESSORT À GAZ | KIT DE RÉPARATION | BRIDE | RACCORD DE CHARGE |
| ITA | ORDINE | CILINDRO AD AZOTO | KIT DI MANUTENZIONE | FLANGE | ADATTATORE DI CARICO |
| ESP | PEDIDO | RESORTE DE GAS | KIT DE REPARACION | BRIDA | ADAPTADOR DE CARGA |
| POR | PEDIDO | CILINDRO DE GÁS | KIT DE MANUTENÇÃO | FLANGE | ADAPTADOR DE CARGA |

# KZ 1000

*Compact Height*

AZOL GAS

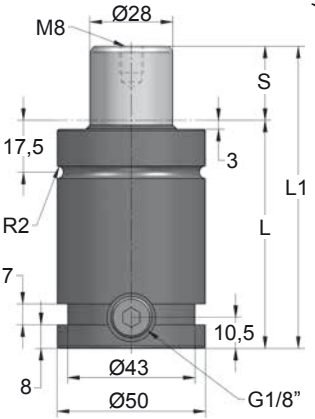


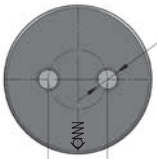


Newt

> Vmax

| ORDER | S (mm) | L1 ±0.25 (mm) | L (mm) | Kg. |
|---|---|---|---|---|
| KZ 1000 013 | 13 | 78 | 65 | 0.74 |
| KZ 1000 016 | 16 | 84 | 68 | 0.76 |
| KZ 1000 019 | 19 | 90 | 71 | 0.79 |
| KZ 1000 025 | 25 | 102 | 77 | 0.84 |
| KZ 1000 032 | 32 | 116 | 84 | 0.90 |
| KZ 1000 038 | 38 | 128 | 90 | 0.95 |
| KZ 1000 050 | 50 | 152 | 102 | 1.05 |
| KZ 1000 063 | 63 | 178 | 115 | 1.16 |
| KZ 1000 075 | 75 | 202 | 127 | 1.26 |
| KZ 1000 080 | 80 | 212 | 132 | 1.30 |
| KZ 1000 100 | 100 | 252 | 152 | 1.47 |
| KZ 1000 125 | 125 | 302 | 177 | 1.68 |

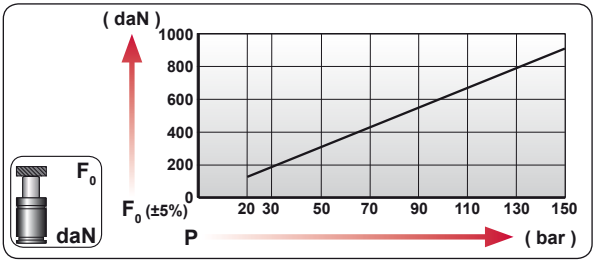


| CODE | bar | psi | $F_0$ daN | $F_1$ daN |
|---|---|---|---|---|
| KZ 1000 050 | 150 | 2175 | 920 | 1495 |
| KZ-H 1000 050 | 0 | 0 | --- | --- |

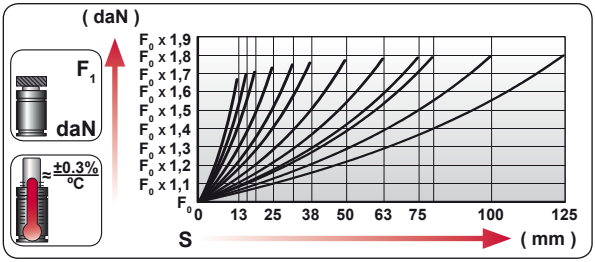


| | |
|---|---|
| ENG | ORDER |
| DEU | BESTELLUNG |
| FRA | COMMANDE |
| ITA | ORDINE |
| ESP | PEDIDO |
| POR | PEDIDO |




KZ 1000 50

KZ 1000 50

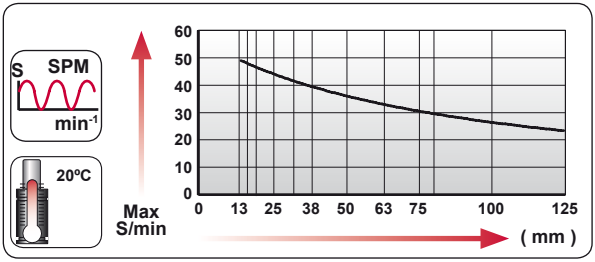


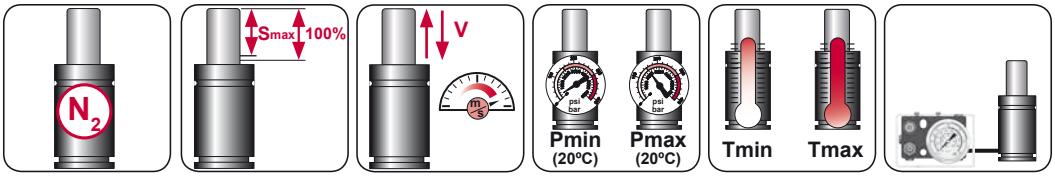


| $N_2$ | Smax < 90% | Vmax 1,6 m/s | bar psi 20 290 | bar psi 150 2175 | °C °F 0 32 | °C °F 80 176 | 600 CP- |
|---|---|---|---|---|---|---|---|

AZOL GAS

# KZ 1000 MOUNTS

*Compact Height*

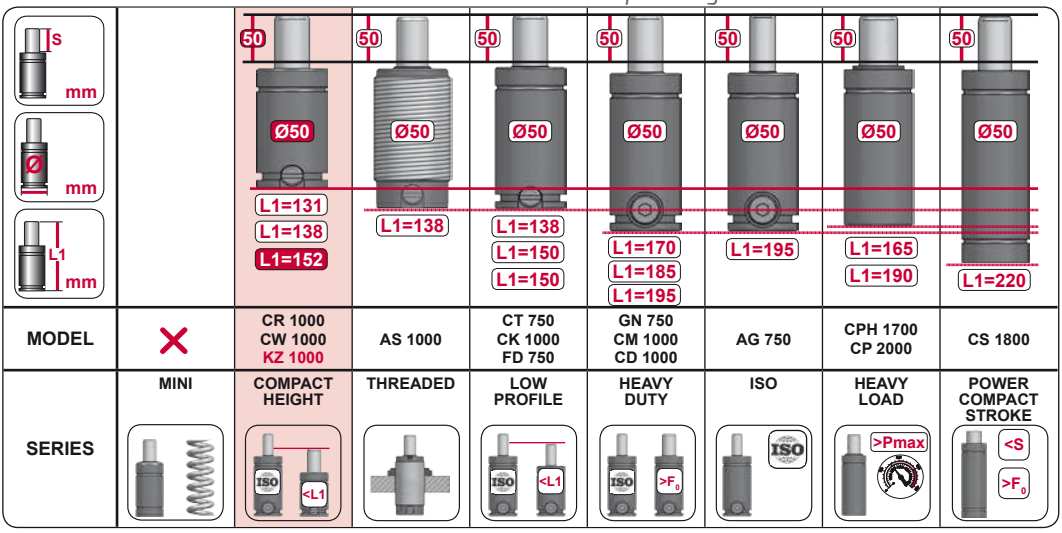


| MODEL | | CR 1000 CW 1000 KZ 1000 | AS 1000 | CT 750 CK 1000 FD 750 | GN 750 CM 1000 CD 1000 | AG 750 | CPH 1700 CP 2000 | CS 1800 |
|---|---|---|---|---|---|---|---|---|
| SERIES | MINI | COMPACT HEIGHT | THREADED | LOW PROFILE | HEAVY DUTY | ISO | HEAVY LOAD | POWER COMPACT STROKE |

## A14-050

ISO · E24.54.815.G · EM24.54.700/F

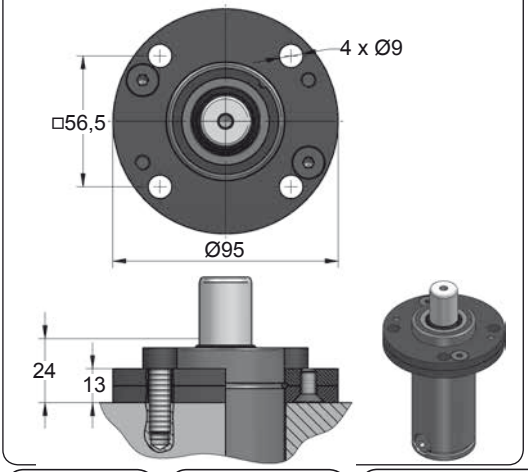


## A34-050

ISO · VDI

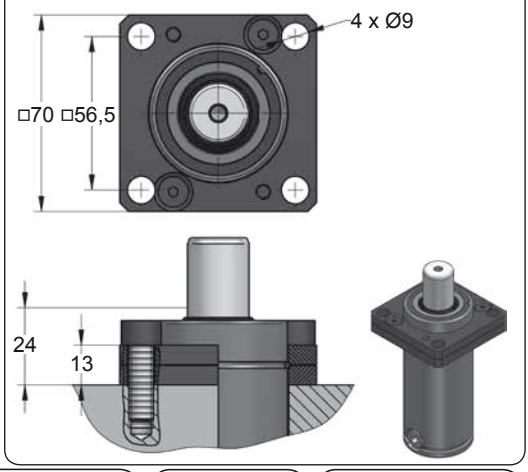





| CODE | | KZ 1000 050 | KIT XXXXXXX-S KIT XXXXXXX-C | A14-050 | 18 GA 5 |
|---|---|---|---|---|---|
| ENG | ORDER | GAS SPRING | REPAIR KIT | FLANGE | CHARGING ADAPTER |
| DEU | BESTELLUNG | GASDRUCKFEDER | ERSATZTEILSATZ | FLANSCHE | LADEADAPTER |
| FRA | COMMANDE | RESSORT À GAZ | KIT DE RÉPARATION | BRIDE | RACCORD DE CHARGE |
| ITA | ORDINE | CILINDRO AD AZOTO | KIT DI MANUTENZIONE | FLANGE | ADATTATORE DI CARICO |
| ESP | PEDIDO | RESORTE DE GAS | KIT DE REPARACION | BRIDA | ADAPTADOR DE CARGA |
| POR | PEDIDO | CILINDRO DE GÁS | KIT DE MANUTENÇÃO | FLANGE | ADAPTADOR DE CARGA |

# KZ 1000 MOUNTS

*Compact Height*

AZOL GAS

## B13-050

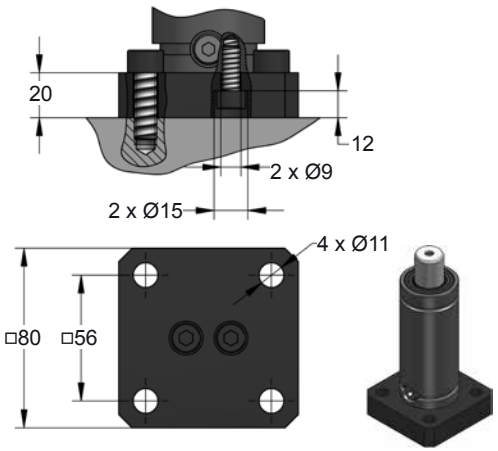


## B18-050

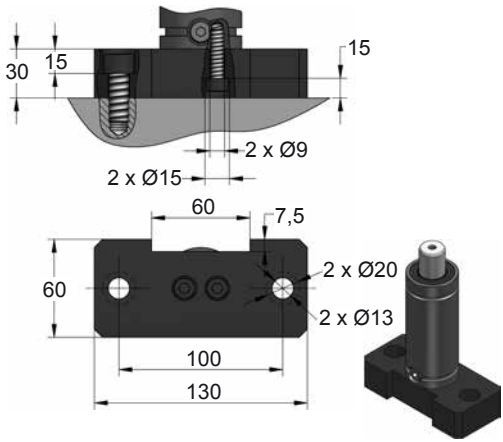


## B28-050

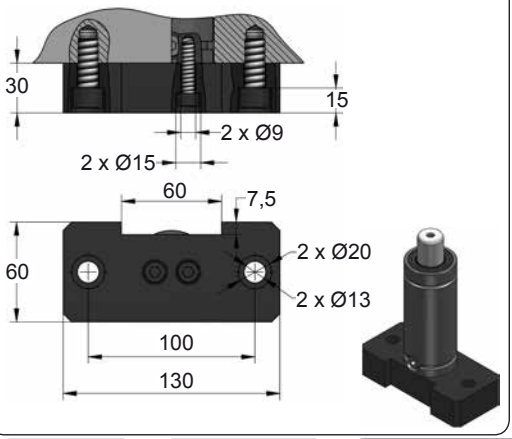


## B98-050

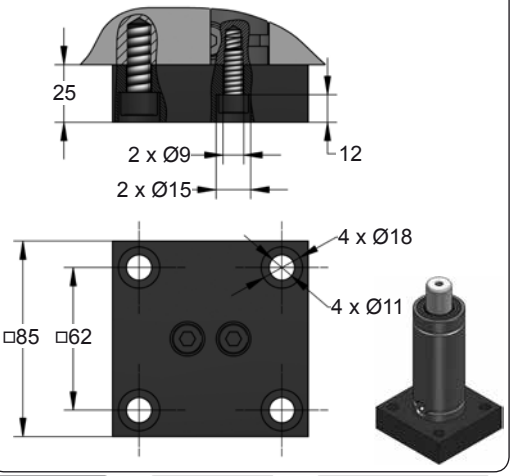









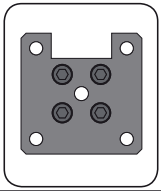

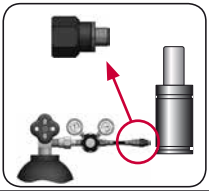

| CODE | | KZ 1000 050 | KIT XXXXXXX-S<br>KIT XXXXXXX-C | B13-050 | 18 GA 5 |
|---|---|---|---|---|---|
| ENG | ORDER | GAS SPRING | REPAIR KIT | FLANGE | CHARGING ADAPTER |
| DEU | BESTELLUNG | GASDRUCKFEDER | ERSATZTEILSATZ | FLANSCHE | LADEADAPTER |
| FRA | COMMANDE | RESSORT À GAZ | KIT DE RÉPARATION | BRIDE | RACCORD DE CHARGE |
| ITA | ORDINE | CILINDRO AD AZOTO | KIT DI MANUTENZIONE | FLANGE | ADATTATORE DI CARICO |
| ESP | PEDIDO | RESORTE DE GAS | KIT DE REPARACION | BRIDA | ADAPTADOR DE CARGA |
| POR | PEDIDO | CILINDRO DE GÁS | KIT DE MANUTENÇÃO | FLANGE | ADAPTADOR DE CARGA |

AZOL GAS

# KZ 1000 MOUNTS

*Compact Height*

## C05-050

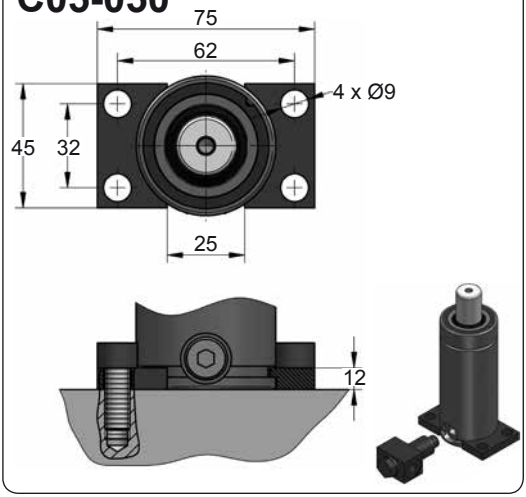


## C20-050

ISO VDI E24.54.815.G EM24.54.700/F

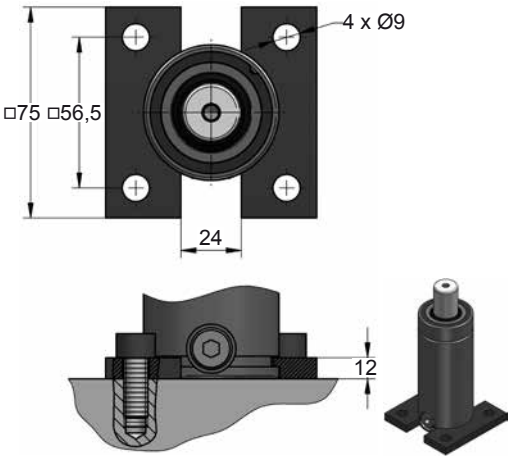


## D02-050

ISO E24.54.815.G EM24.54.700/F

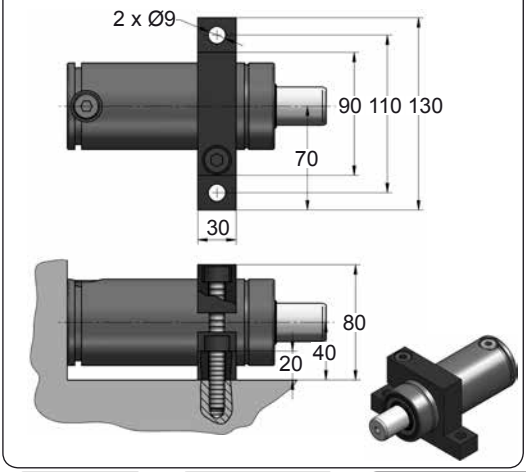


## D82-050

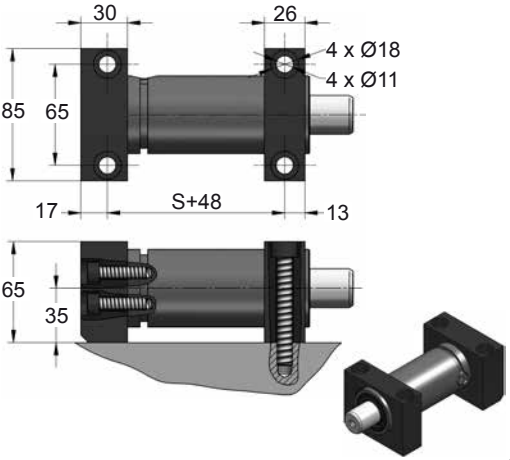









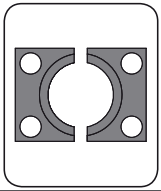

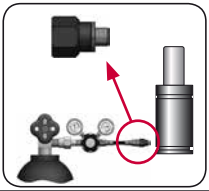

| CODE | | KZ 1000 050 | KIT XXXXXXX-S<br>KIT XXXXXXX-C | C05-050 | 18 GA 5 |
|---|---|---|---|---|---|
| ENG | ORDER | GAS SPRING | REPAIR KIT | FLANGE | CHARGING ADAPTER |
| DEU | BESTELLUNG | GASDRUCKFEDER | ERSATZTEILSATZ | FLANSCHE | LADEADAPTER |
| FRA | COMMANDE | RESSORT À GAZ | KIT DE RÉPARATION | BRIDE | RACCORD DE CHARGE |
| ITA | ORDINE | CILINDRO AD AZOTO | KIT DI MANUTENZIONE | FLANGE | ADATTATORE DI CARICO |
| ESP | PEDIDO | RESORTE DE GAS | KIT DE REPARACION | BRIDA | ADAPTADOR DE CARGA |
| POR | PEDIDO | CILINDRO DE GÁS | KIT DE MANUTENÇÃO | FLANGE | ADAPTADOR DE CARGA |

# KZ 1500

*Compact Height*

AZOL GAS

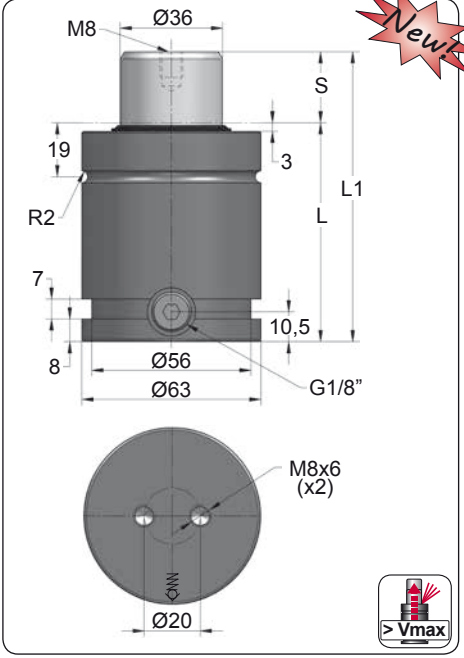


Newt

| ORDER | S (mm) | L1 ±0.25 (mm) | L (mm) | Kg. |
|---|---|---|---|---|
| KZ 1500 013 | 13 | 78 | 65 | 1.17 |
| KZ 1500 016 | 16 | 84 | 68 | 1.21 |
| KZ 1500 019 | 19 | 90 | 71 | 1.25 |
| KZ 1500 025 | 25 | 102 | 77 | 1.32 |
| KZ 1500 032 | 32 | 116 | 84 | 1.41 |
| KZ 1500 038 | 38 | 128 | 90 | 1.49 |
| KZ 1500 050 | 50 | 152 | 102 | 1.64 |
| KZ 1500 063 | 63 | 178 | 115 | 1.81 |
| KZ 1500 075 | 75 | 202 | 127 | 1.97 |
| KZ 1500 080 | 80 | 212 | 132 | 2.03 |
| KZ 1500 100 | 100 | 252 | 152 | 2.29 |
| KZ 1500 125 | 125 | 302 | 177 | 2.61 |

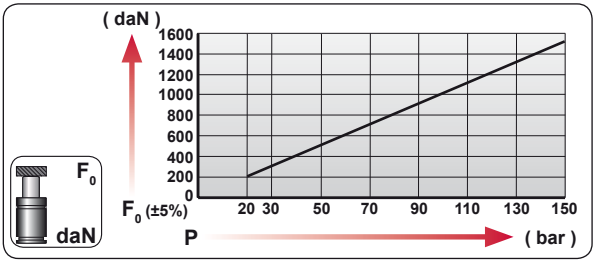


| CODE | bar | psi | $F_0$ daN | $F_1$ daN |
|---|---|---|---|---|
| KZ 1500 050 | 150 | 2175 | 1530 | 2475 |
| KZ-H 1500 050 | 0 | 0 | --- | --- |

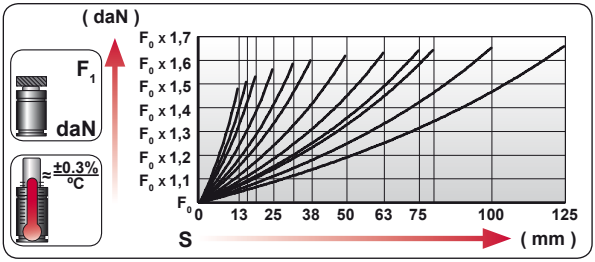


| | |
|---|---|
| ENG | ORDER |
| DEU | BESTELLUNG |
| FRA | COMMANDE |
| ITA | ORDINE |
| ESP | PEDIDO |
| POR | PEDIDO |




KZ 1500 50

KZ 1500 50

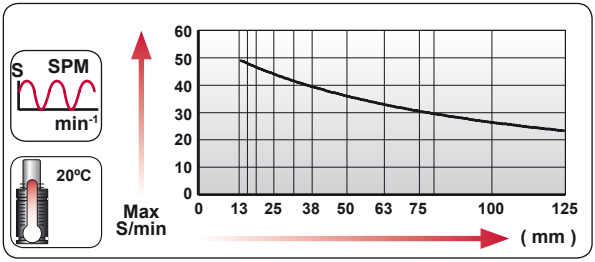


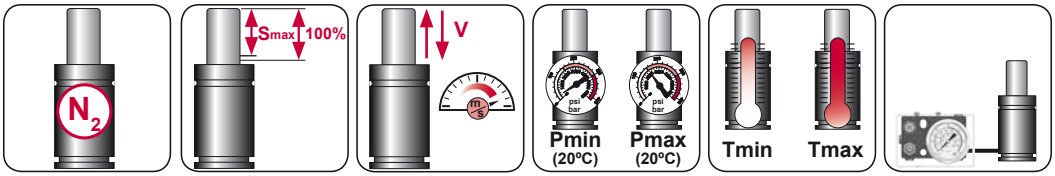


| $N_2$ | Smax < 90% | Vmax 1,6 m/s | bar psi 20 290 | bar psi 150 2175 | °C °F 0 32 | °C °F 80 176 | 600 CP- |
|---|---|---|---|---|---|---|---|

AZOL GAS

# KZ 1500 MOUNTS

*Compact Height*

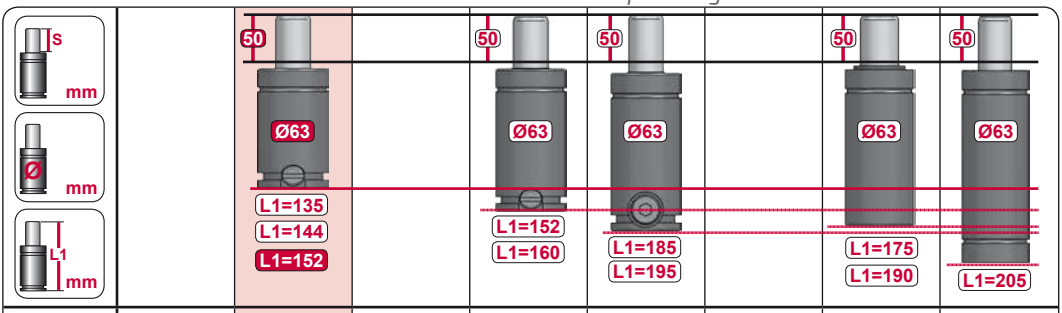


| MODEL | | CR 1500 CW 1500 KZ 1500 | | CT 1500 CK 1500 | CM 1500 CD 1500 | | CPH 2800 CP 3000 | CS 3000 |
|---|---|---|---|---|---|---|---|---|
| SERIES | MINI | COMPACT HEIGHT | THREADED | LOW PROFILE | HEAVY DUTY | ISO | HEAVY LOAD | POWER COMPACT STROKE |

## A14-063

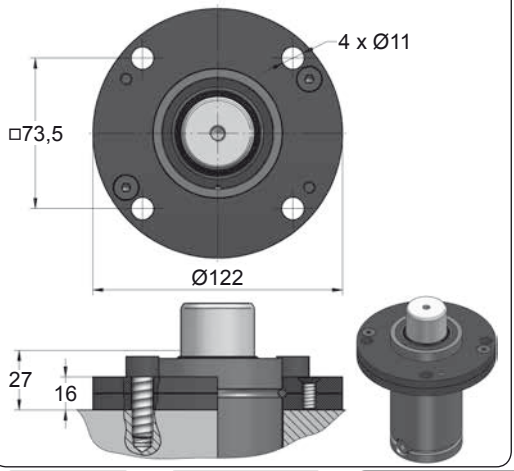


## A69-063

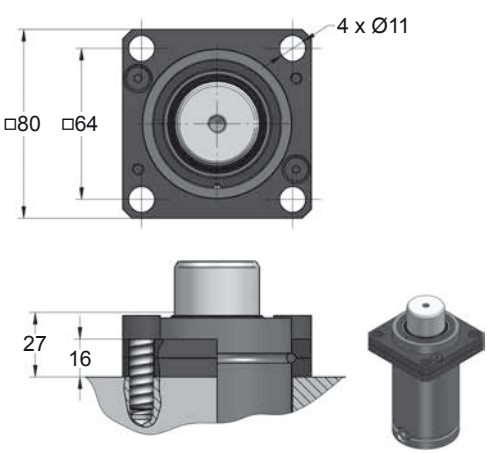









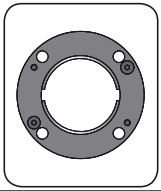

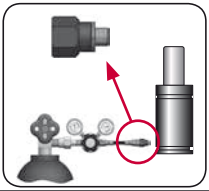

| CODE | | KZ 1500 050 | KIT XXXXXXX-S KIT XXXXXXX-C | A14-063 | 18 GA 5 |
|---|---|---|---|---|---|
| ENG | ORDER | GAS SPRING | REPAIR KIT | FLANGE | CHARGING ADAPTER |
| DEU | BESTELLUNG | GASDRUCKFEDER | ERSATZTEILSATZ | FLANSCHE | LADEADAPTER |
| FRA | COMMANDE | RESSORT À GAZ | KIT DE RÉPARATION | BRIDE | RACCORD DE CHARGE |
| ITA | ORDINE | CILINDRO AD AZOTO | KIT DI MANUTENZIONE | FLANGE | ADATTATORE DI CARICO |
| ESP | PEDIDO | RESORTE DE GAS | KIT DE REPARACION | BRIDA | ADAPTADOR DE CARGA |
| POR | PEDIDO | CILINDRO DE GÁS | KIT DE MANUTENÇÃO | FLANGE | ADAPTADOR DE CARGA |

# KZ 1500 MOUNTS

*Compact Height*

AZOL GAS

## B36-063

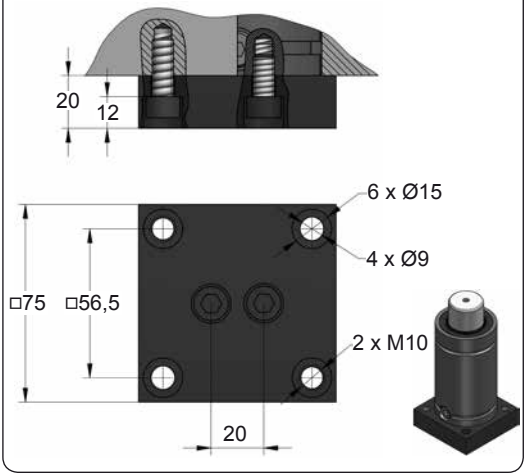


## B41-063

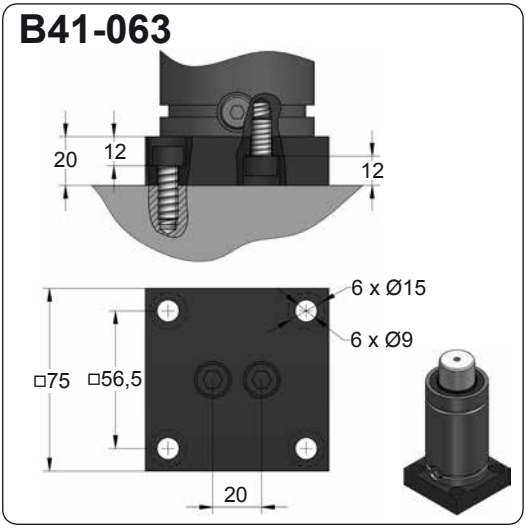


## C05-063

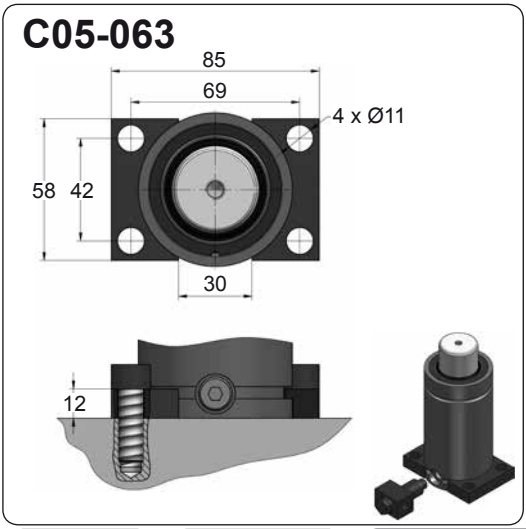


## C35-063

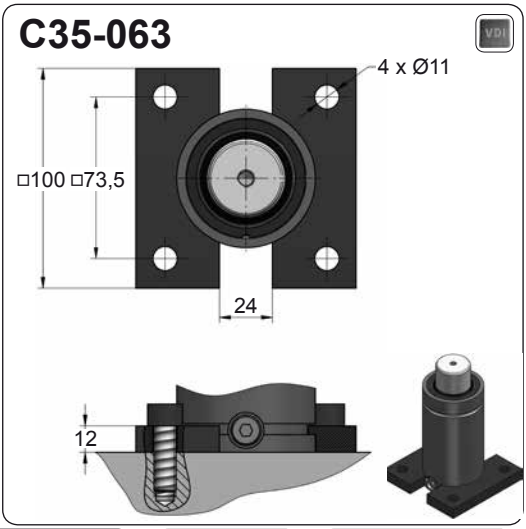









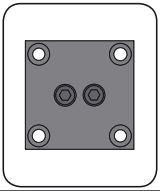

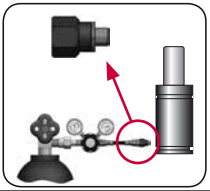

| CODE | | KZ 1500 050 | KIT XXXXXXX-S<br>KIT XXXXXXX-C | B36-063 | 18 GA 5 |
|---|---|---|---|---|---|
| ENG | ORDER | GAS SPRING | REPAIR KIT | FLANGE | CHARGING ADAPTER |
| DEU | BESTELLUNG | GASDRUCKFEDER | ERSATZTEILSATZ | FLANSCHE | LADEADAPTER |
| FRA | COMMANDE | RESSORT À GAZ | KIT DE RÉPARATION | BRIDE | RACCORD DE CHARGE |
| ITA | ORDINE | CILINDRO AD AZOTO | KIT DI MANUTENZIONE | FLANGE | ADATTATORE DI CARICO |
| ESP | PEDIDO | RESORTE DE GAS | KIT DE REPARACION | BRIDA | ADAPTADOR DE CARGA |
| POR | PEDIDO | CILINDRO DE GÁS | KIT DE MANUTENÇÃO | FLANGE | ADAPTADOR DE CARGA |

AZOL GAS

# KZ 1500 MOUNTS

*Compact Height*

## D02-063

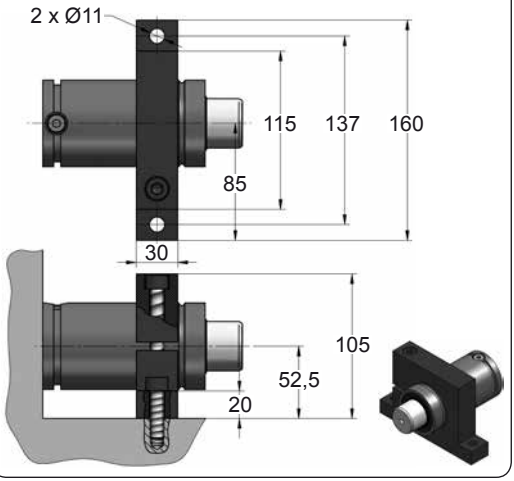


## D67-063

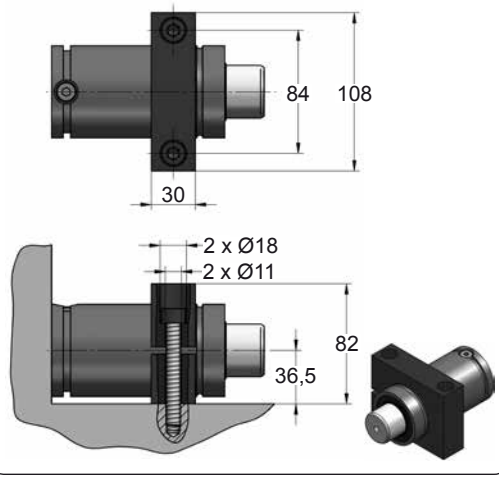




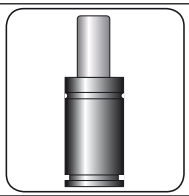




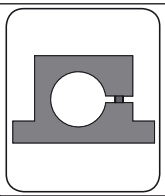

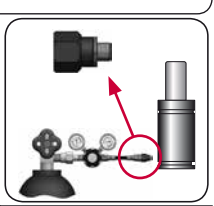

| CODE | | KZ 1500 050 | KIT XXXXXXX-S<br>KIT XXXXXXX-C | D02-063 | 18 GA 5 |
|---|---|---|---|---|---|
| ENG | ORDER | GAS SPRING | REPAIR KIT | FLANGE | CHARGING ADAPTER |
| DEU | BESTELLUNG | GASDRUCKFEDER | ERSATZTEILSATZ | FLANSCHE | LADEADAPTER |
| FRA | COMMANDE | RESSORT À GAZ | KIT DE RÉPARATION | BRIDE | RACCORD DE CHARGE |
| ITA | ORDINE | CILINDRO AD AZOTO | KIT DI MANUTENZIONE | FLANGE | ADATTATORE DI CARICO |
| ESP | PEDIDO | RESORTE DE GAS | KIT DE REPARACION | BRIDA | ADAPTADOR DE CARGA |
| POR | PEDIDO | CILINDRO DE GÁS | KIT DE MANUTENÇÃO | FLANGE | ADAPTADOR DE CARGA |

# KZ 2400

*Compact Height*

AZOL GAS

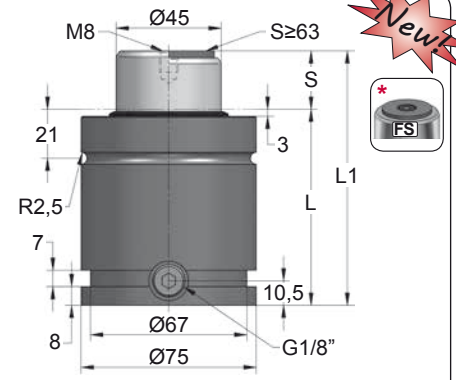


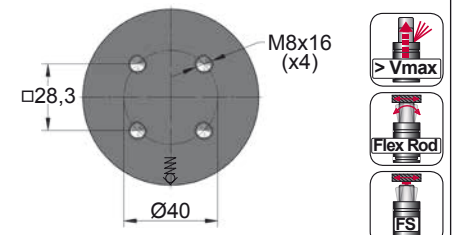


| ORDER | S (mm) | L1 ±0.25 (mm) | L (mm) | Kg. |
|---|---|---|---|---|
| KZ 2400 016 | 16 | 91 | 75 | 1.89 |
| KZ 2400 019 | 19 | 97 | 78 | 1.94 |
| KZ 2400 025 | 25 | 109 | 84 | 2.04 |
| KZ 2400 032 | 32 | 123 | 91 | 2.16 |
| KZ 2400 038 | 38 | 135 | 97 | 2.26 |
| KZ 2400 050 | 50 | 159 | 109 | 2.47 |
| KZ 2400 063 * | 63 | 185 | 122 | 2.69 |
| KZ 2400 075 * | 75 | 209 | 134 | 2.90 |
| KZ 2400 080 * | 80 | 219 | 139 | 2.98 |
| KZ 2400 100 * | 100 | 259 | 159 | 3.33 |
| KZ 2400 125 * | 125 | 309 | 184 | 3.75 |

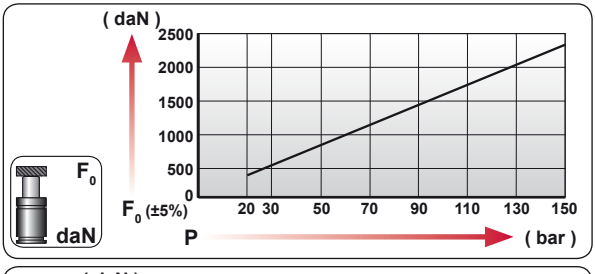


| CODE | bar | psi | $F_0$ daN | $F_1$ daN |
|---|---|---|---|---|
| KZ 2400 050 | 150 | 2175 | 2385 | 3890 |
| KZ-H 2400 050 | 0 | 0 | --- | --- |

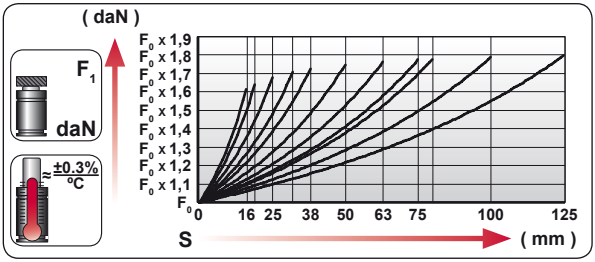


| ENG | ORDER |
|---|---|
| DEU | BESTELLUNG |
| FRA | COMMANDE |
| ITA | ORDINE |
| ESP | PEDIDO |
| POR | PEDIDO |

$F_0$ daN — S mm

KZ 2400 50

KZ 2400 50

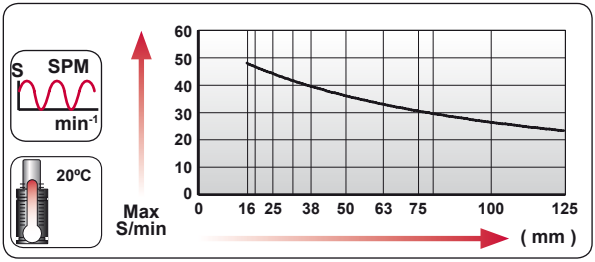


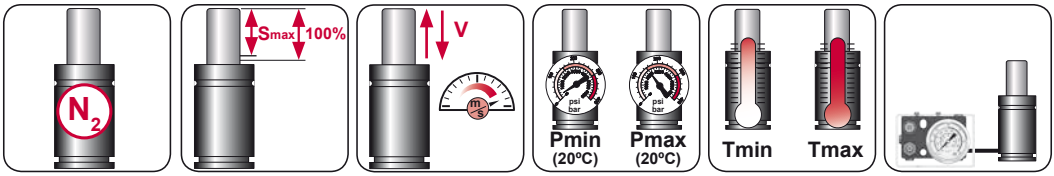


| $N_2$ | Smax < 90% | Vmax 1,6 m/s | bar psi 20 290 | bar psi 150 2175 | °C °F 0 32 | °C °F 80 176 | 600 CP- |
|---|---|---|---|---|---|---|---|

AZOL GAS

# KZ 2400 MOUNTS

*Compact Height*

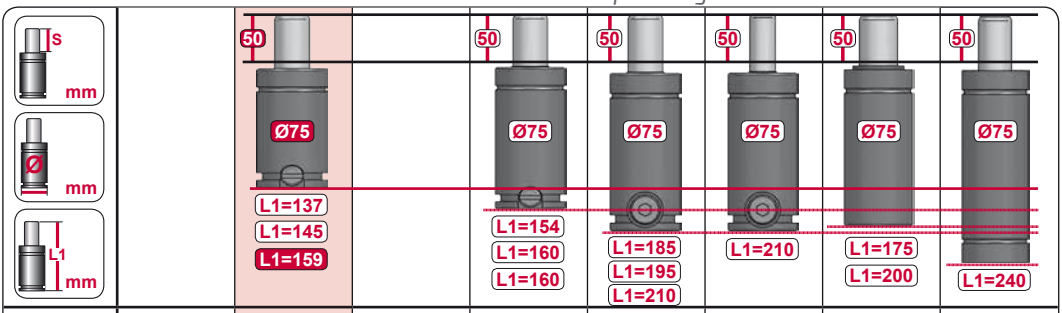


| MODEL | × | CR 2400<br>CW 2400<br>KZ 2400 | × | CT 2500<br>CK 2500<br>FD 1500 | GN 1500<br>CM 2500<br>CD 2400 | AG 1500 | CPH 4300<br>CP 5000 | CS 4700 |
|---|---|---|---|---|---|---|---|---|
| SERIES | MINI | COMPACT HEIGHT | THREADED | LOW PROFILE | HEAVY DUTY | ISO | HEAVY LOAD | POWER COMPACT STROKE |

## A14-075

ISO E24.54.815.G EM24.54.700/F

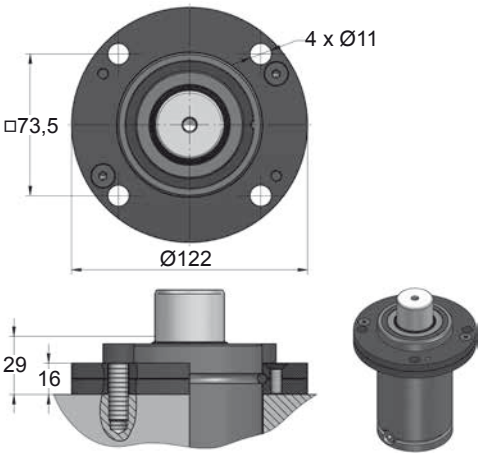


## A34-075

ISO VDI

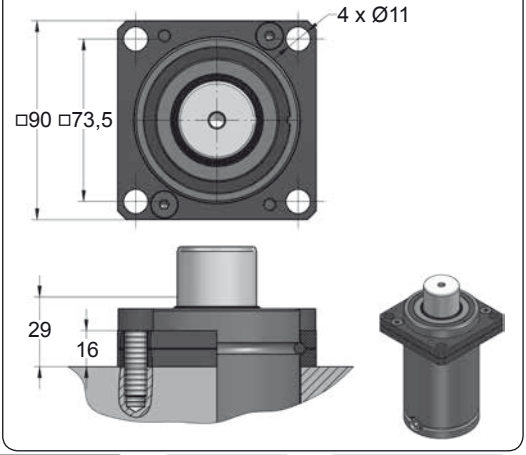





| CODE | | KZ 2400 050 | KIT XXXXXXX-S<br>KIT XXXXXXX-C | A14-075 | 18 GA 5 |
|---|---|---|---|---|---|
| ENG | ORDER | GAS SPRING | REPAIR KIT | FLANGE | CHARGING ADAPTER |
| DEU | BESTELLUNG | GASDRUCKFEDER | ERSATZTEILSATZ | FLANSCHE | LADEADAPTER |
| FRA | COMMANDE | RESSORT À GAZ | KIT DE RÉPARATION | BRIDE | RACCORD DE CHARGE |
| ITA | ORDINE | CILINDRO AD AZOTO | KIT DI MANUTENZIONE | FLANGE | ADATTATORE DI CARICO |
| ESP | PEDIDO | RESORTE DE GAS | KIT DE REPARACION | BRIDA | ADAPTADOR DE CARGA |
| POR | PEDIDO | CILINDRO DE GÁS | KIT DE MANUTENÇÃO | FLANGE | ADAPTADOR DE CARGA |

# KZ 2400 MOUNTS

*Compact Height*

AZOL GAS

## B13-075

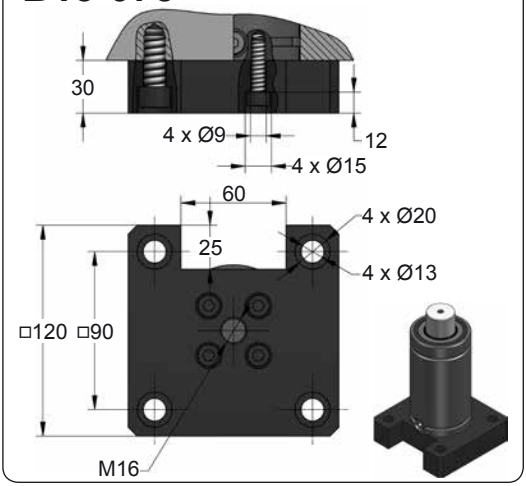


## B18-075

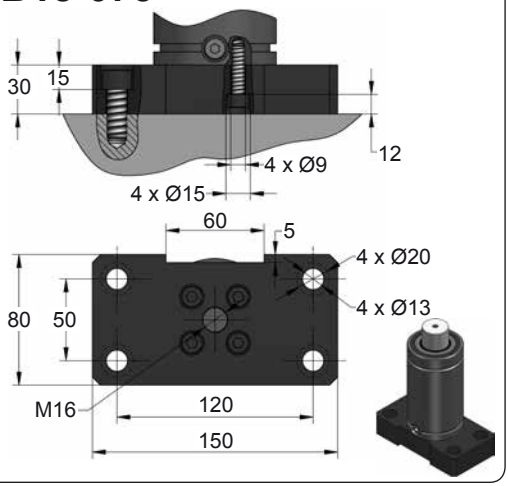


## B23-075

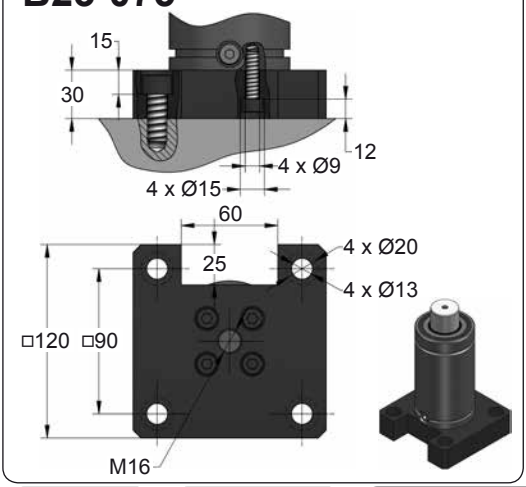


## B98-075

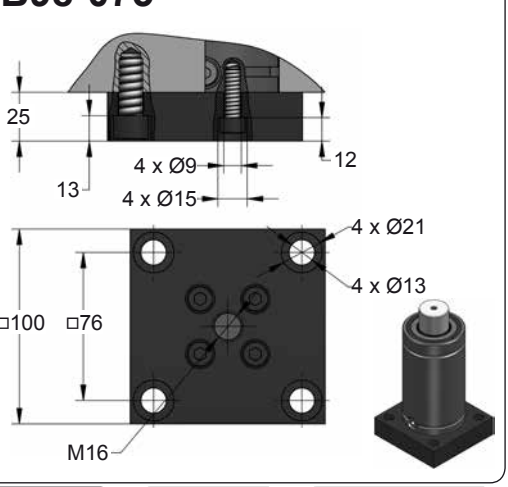









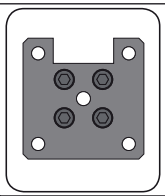

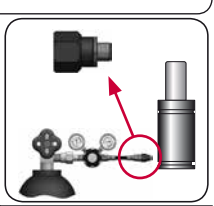

| CODE | | KZ 2400 050 | KIT XXXXXXX-S<br>KIT XXXXXXX-C | B13-075 | 18 GA 5 |
|---|---|---|---|---|---|
| ENG | ORDER | GAS SPRING | REPAIR KIT | FLANGE | CHARGING ADAPTER |
| DEU | BESTELLUNG | GASDRUCKFEDER | ERSATZTEILSATZ | FLANSCHE | LADEADAPTER |
| FRA | COMMANDE | RESSORT À GAZ | KIT DE RÉPARATION | BRIDE | RACCORD DE CHARGE |
| ITA | ORDINE | CILINDRO AD AZOTO | KIT DI MANUTENZIONE | FLANGE | ADATTATORE DI CARICO |
| ESP | PEDIDO | RESORTE DE GAS | KIT DE REPARACION | BRIDA | ADAPTADOR DE CARGA |
| POR | PEDIDO | CILINDRO DE GÁS | KIT DE MANUTENÇÃO | FLANGE | ADAPTADOR DE CARGA |

AZOL GAS

# KZ 2400 MOUNTS

*Compact Height*

## C05-075

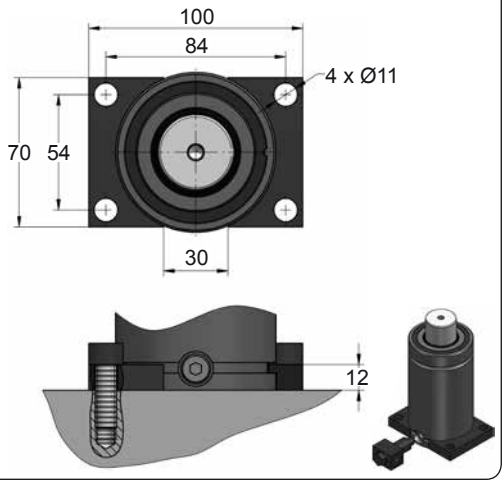


## C20-075

ISO VDI E24.54.815.G EM24.54.700/F

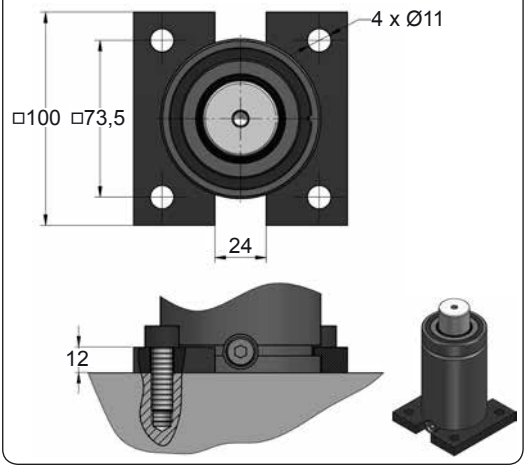


## D02-075

ISO E24.54.815.G EM24.54.700/F

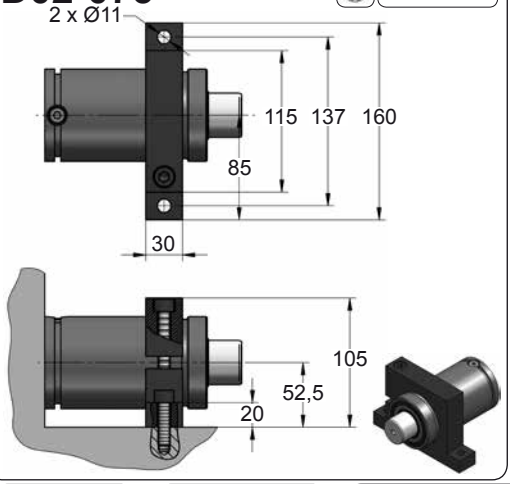


## D82-075

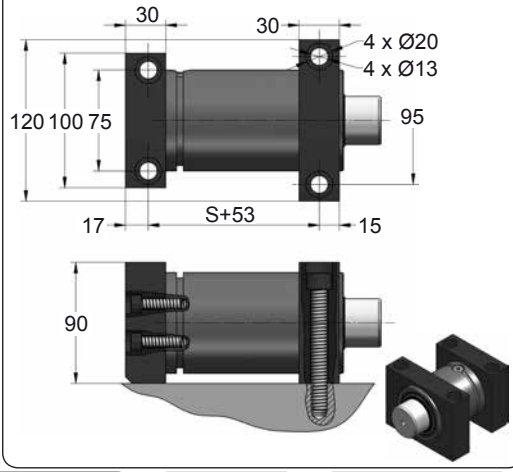









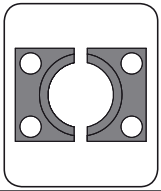

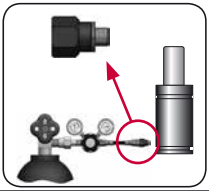

| CODE | | KZ 2400 050 | KIT XXXXXXX-S<br>KIT XXXXXXX-C | C05-075 | 18 GA 5 |
|---|---|---|---|---|---|
| ENG | ORDER | GAS SPRING | REPAIR KIT | FLANGE | CHARGING ADAPTER |
| DEU | BESTELLUNG | GASDRUCKFEDER | ERSATZTEILSATZ | FLANSCHE | LADEADAPTER |
| FRA | COMMANDE | RESSORT À GAZ | KIT DE RÉPARATION | BRIDE | RACCORD DE CHARGE |
| ITA | ORDINE | CILINDRO AD AZOTO | KIT DI MANUTENZIONE | FLANGE | ADATTATORE DI CARICO |
| ESP | PEDIDO | RESORTE DE GAS | KIT DE REPARACION | BRIDA | ADAPTADOR DE CARGA |
| POR | PEDIDO | CILINDRO DE GÁS | KIT DE MANUTENÇÃO | FLANGE | ADAPTADOR DE CARGA |

# KZ 4200

*Compact Height*

AZOL GAS

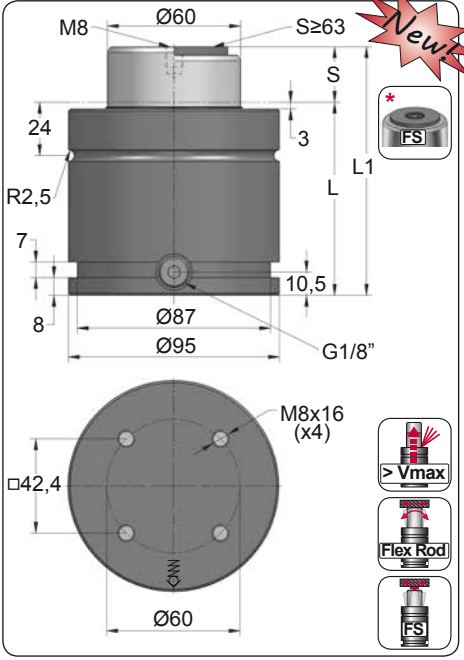


| ORDER | S (mm) | L1 ±0.25 (mm) | L (mm) | Kg. |
|---|---|---|---|---|
| KZ 4200 016 | 16 | 94 | 78 | 3.19 |
| KZ 4200 019 | 19 | 100 | 81 | 3.27 |
| KZ 4200 025 | 25 | 112 | 87 | 3.44 |
| KZ 4200 032 | 32 | 126 | 94 | 3.64 |
| KZ 4200 038 | 38 | 138 | 100 | 3.81 |
| KZ 4200 050 | 50 | 162 | 112 | 4.16 |
| KZ 4200 063 * | 63 | 188 | 125 | 4.53 |
| KZ 4200 075 * | 75 | 212 | 137 | 4.87 |
| KZ 4200 080 * | 80 | 222 | 142 | 5.01 |
| KZ 4200 100 * | 100 | 262 | 162 | 5.58 |
| KZ 4200 125 * | 125 | 312 | 187 | 6.29 |

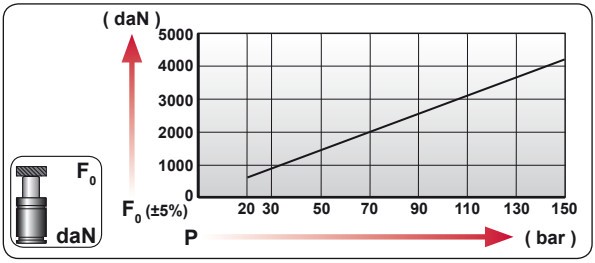


| CODE | bar | psi | F0 daN | F1 daN |
|---|---|---|---|---|
| KZ 4200 050 | 150 | 2175 | 4240 | 7200 |
| KZ-H 4200 050 | 0 | 0 | --- | --- |

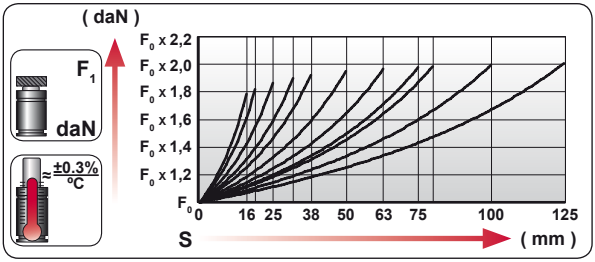


| | |
|---|---|
| ENG | ORDER |
| DEU | BESTELLUNG |
| FRA | COMMANDE |
| ITA | ORDINE |
| ESP | PEDIDO |
| POR | PEDIDO |

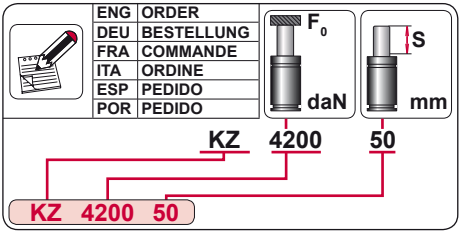


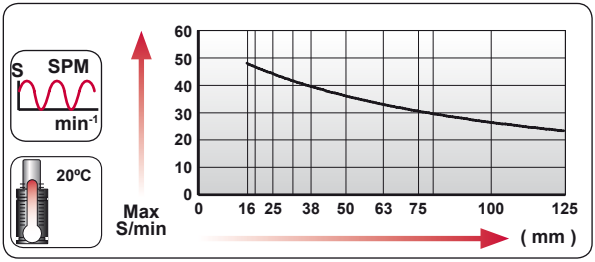


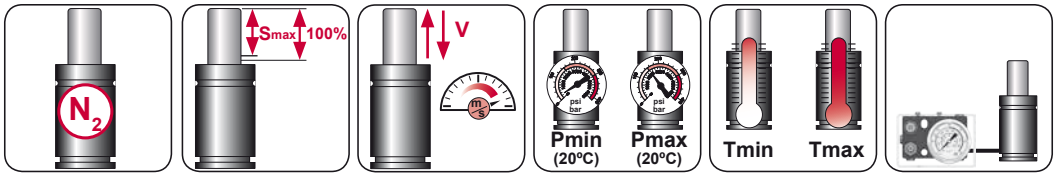


| $N_2$ | Smax < 90% | Vmax 1,6 m/s | bar psi 20 290 | bar psi 150 2175 | °C °F 0 32 | °C °F 80 176 | 600 CP- |
|---|---|---|---|---|---|---|---|

AZOL GAS

# KZ 4200 MOUNTS

*Compact Height*

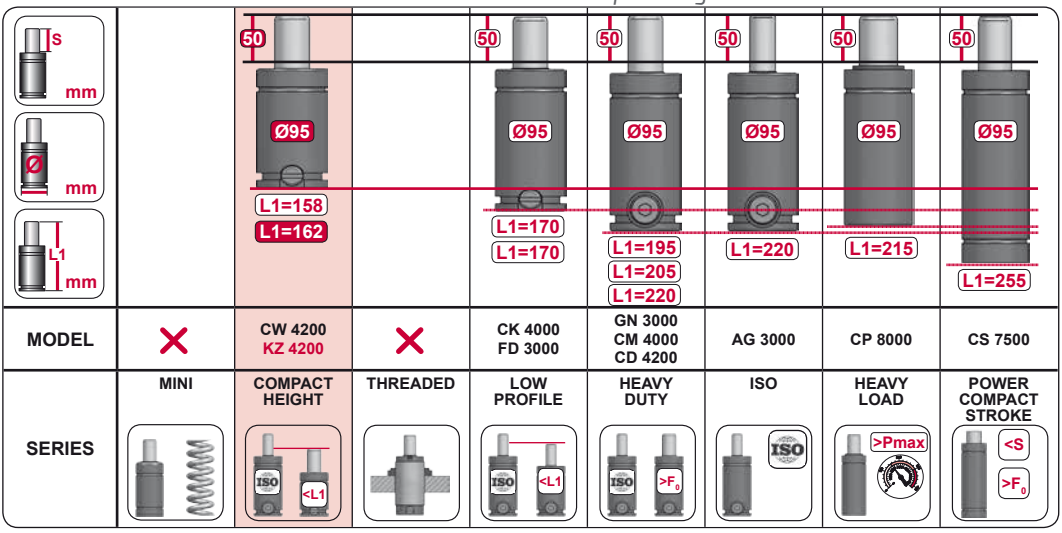


| | | | | | | | | |
|---|---|---|---|---|---|---|---|---|
| **MODEL** | ✕ | CW 4200<br>KZ 4200 | ✕ | CK 4000<br>FD 3000 | GN 3000<br>CM 4000<br>CD 4200 | AG 3000 | CP 8000 | CS 7500 |
| **SERIES** | MINI | COMPACT HEIGHT | THREADED | LOW PROFILE | HEAVY DUTY | ISO | HEAVY LOAD | POWER COMPACT STROKE |

## A14-095

ISO E24.54.815.G EM24.54.700/F

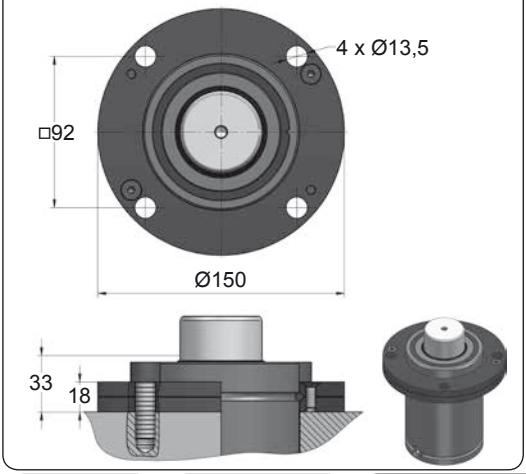


## A34-095

ISO VDI

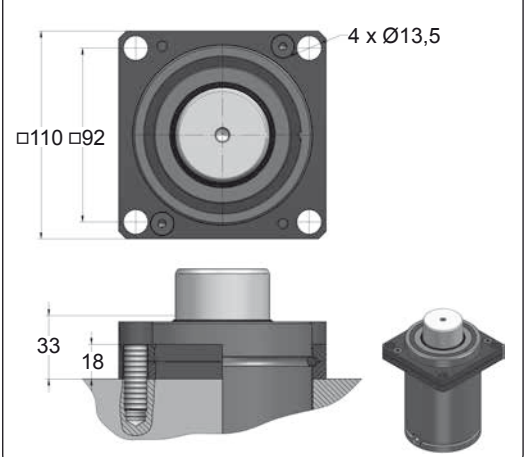





| CODE | | KZ 4200 050 | KIT XXXXXXX-S<br>KIT XXXXXXX-C | A14-095 | 18 GA 5 |
|---|---|---|---|---|---|
| ENG | ORDER | GAS SPRING | REPAIR KIT | FLANGE | CHARGING ADAPTER |
| DEU | BESTELLUNG | GASDRUCKFEDER | ERSATZTEILSATZ | FLANSCHE | LADEADAPTER |
| FRA | COMMANDE | RESSORT À GAZ | KIT DE RÉPARATION | BRIDE | RACCORD DE CHARGE |
| ITA | ORDINE | CILINDRO AD AZOTO | KIT DI MANUTENZIONE | FLANGE | ADATTATORE DI CARICO |
| ESP | PEDIDO | RESORTE DE GAS | KIT DE REPARACION | BRIDA | ADAPTADOR DE CARGA |
| POR | PEDIDO | CILINDRO DE GÁS | KIT DE MANUTENÇÃO | FLANGE | ADAPTADOR DE CARGA |

# KZ 4200 MOUNTS

*Compact Height*

AZOL GAS

## B13-095

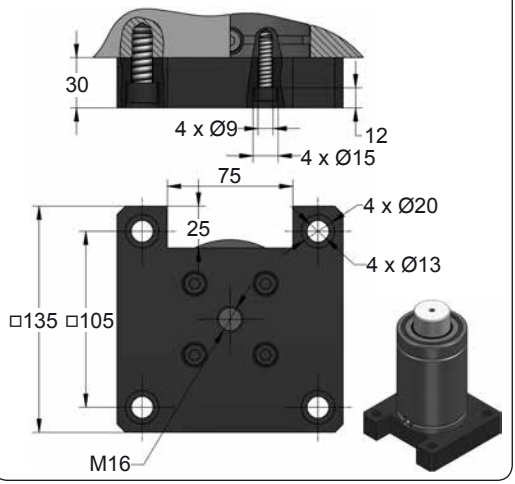


## B18-095

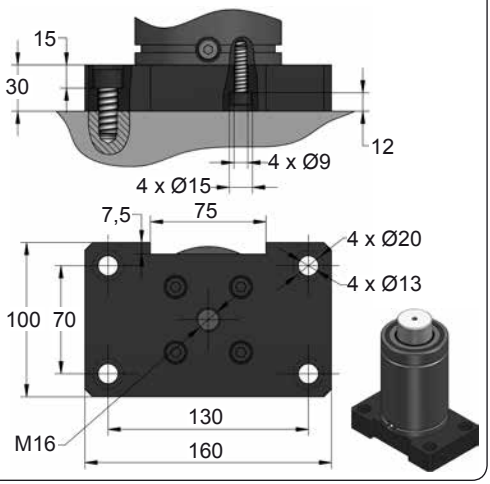


## B23-095

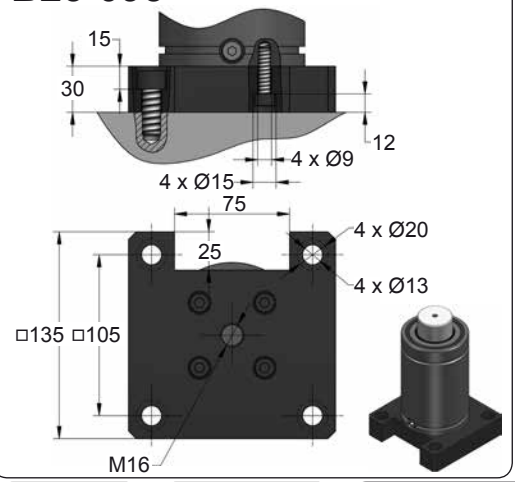


## B28-095

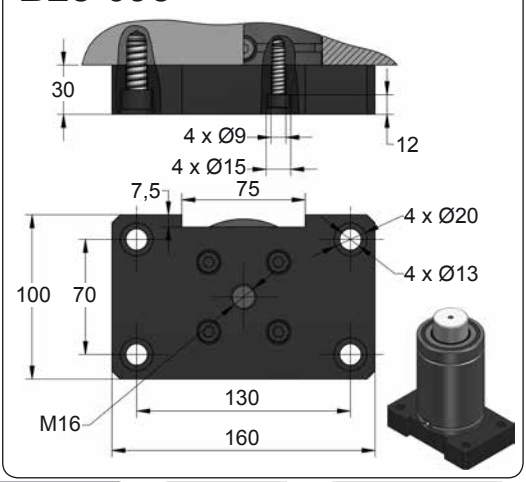









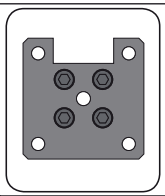

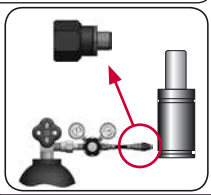

| CODE | | KZ 4200 050 | KIT XXXXXXX-S<br>KIT XXXXXXX-C | B13-095 | 18 GA 5 |
|---|---|---|---|---|---|
| ENG | ORDER | GAS SPRING | REPAIR KIT | FLANGE | CHARGING ADAPTER |
| DEU | BESTELLUNG | GASDRUCKFEDER | ERSATZTEILSATZ | FLANSCHE | LADEADAPTER |
| FRA | COMMANDE | RESSORT À GAZ | KIT DE RÉPARATION | BRIDE | RACCORD DE CHARGE |
| ITA | ORDINE | CILINDRO AD AZOTO | KIT DI MANUTENZIONE | FLANGE | ADATTATORE DI CARICO |
| ESP | PEDIDO | RESORTE DE GAS | KIT DE REPARACION | BRIDA | ADAPTADOR DE CARGA |
| POR | PEDIDO | CILINDRO DE GÁS | KIT DE MANUTENÇÃO | FLANGE | ADAPTADOR DE CARGA |

AZOL GAS

# KZ 4200 MOUNTS

*Compact Height*

## B98-095

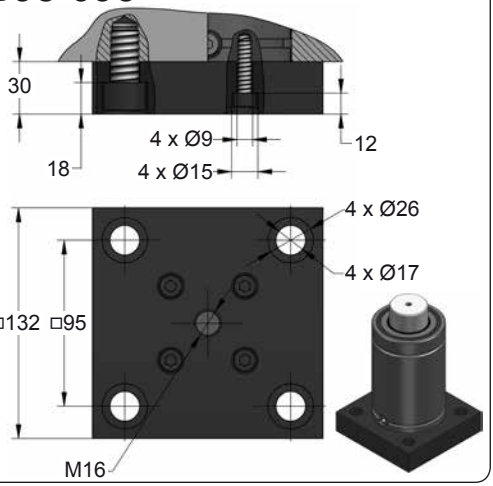


## C05-095

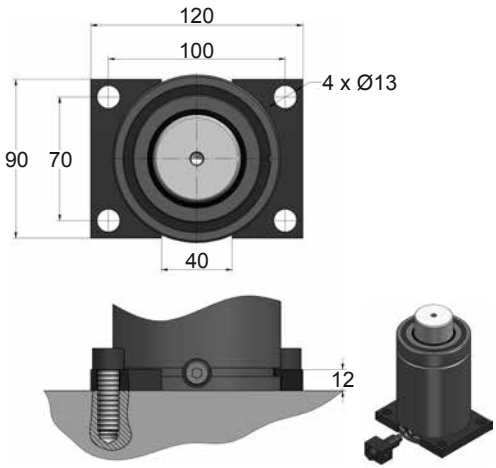


## C20-095

ISO · E24.54.815.G · EM24.54.700/F

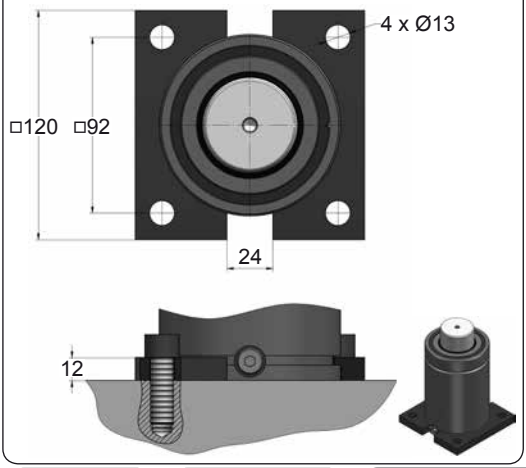


## D02-095

ISO · E24.54.815.G · EM24.54.700/F

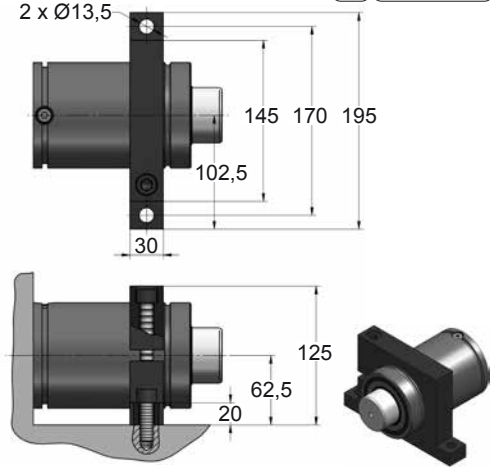









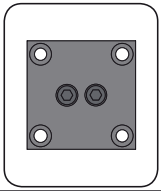

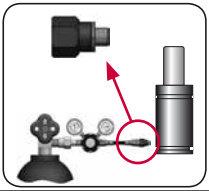

| CODE | | KZ 4200 050 | KIT XXXXXXX-S<br>KIT XXXXXXX-C | B98-095 | 18 GA 5 |
|---|---|---|---|---|---|
| ENG | ORDER | GAS SPRING | REPAIR KIT | FLANGE | CHARGING ADAPTER |
| DEU | BESTELLUNG | GASDRUCKFEDER | ERSATZTEILSATZ | FLANSCHE | LADEADAPTER |
| FRA | COMMANDE | RESSORT À GAZ | KIT DE RÉPARATION | BRIDE | RACCORD DE CHARGE |
| ITA | ORDINE | CILINDRO AD AZOTO | KIT DI MANUTENZIONE | FLANGE | ADATTATORE DI CARICO |
| ESP | PEDIDO | RESORTE DE GAS | KIT DE REPARACION | BRIDA | ADAPTADOR DE CARGA |
| POR | PEDIDO | CILINDRO DE GÁS | KIT DE MANUTENÇÃO | FLANGE | ADAPTADOR DE CARGA |

# KZ 6600

*Compact Height*

AZOL GAS

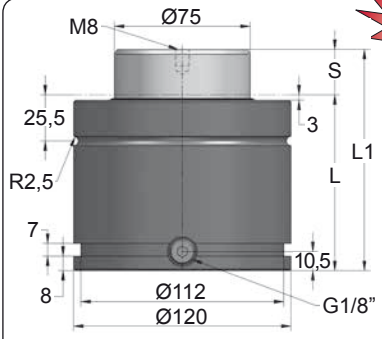


Newt

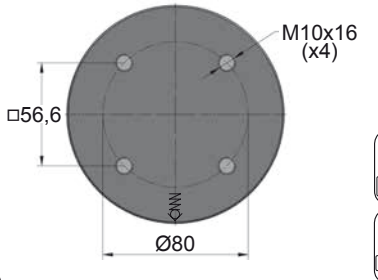





| ORDER | S (mm) | L1 ±0,25 (mm) | L (mm) | Kg. |
|---|---|---|---|---|
| KZ 6600 016 | 16 | 104 | 88 | 5.89 |
| KZ 6600 019 | 19 | 110 | 91 | 6.03 |
| KZ 6600 025 | 25 | 122 | 97 | 6.31 |
| KZ 6600 032 | 32 | 136 | 104 | 6.63 |
| KZ 6600 038 | 38 | 148 | 110 | 6.91 |
| KZ 6600 050 | 50 | 172 | 122 | 7.47 |
| KZ 6600 063 | 63 | 198 | 135 | 8.07 |
| KZ 6600 075 | 75 | 222 | 147 | 8.63 |
| KZ 6600 080 | 80 | 232 | 152 | 8.86 |
| KZ 6600 100 | 100 | 272 | 172 | 9.79 |
| KZ 6600 125 | 125 | 322 | 197 | 10.95 |

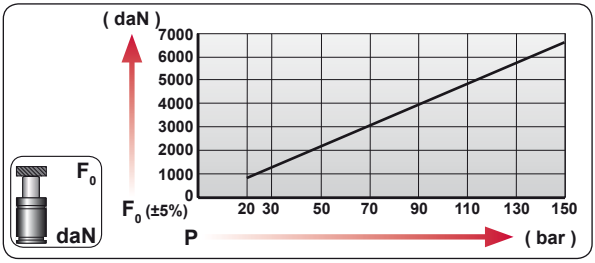


| CODE | | bar | psi | F0 daN | F1 daN |
|---|---|---|---|---|---|
| KZ 6600 050 | | 150 | 2175 | 6630 | 10990 |
| KZ-H 6600 050 | | 0 | 0 | --- | --- |

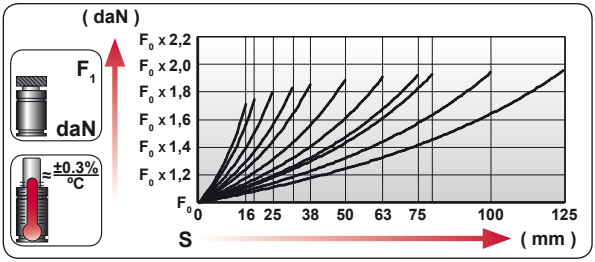


| | |
|---|---|
| ENG | ORDER |
| DEU | BESTELLUNG |
| FRA | COMMANDE |
| ITA | ORDINE |
| ESP | PEDIDO |
| POR | PEDIDO |

F0 daN — S mm

KZ 6600 50

KZ 6600 50

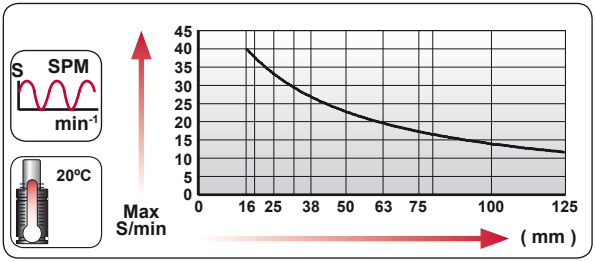


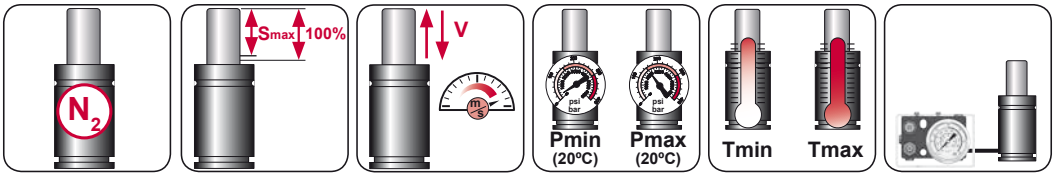


| $N_2$ | Smax < 90% | Vmax 1,6 m/s | bar psi 20 290 | bar psi 150 2175 | ºC ºF 0 32 | ºC ºF 80 176 | 600 CP- |
|---|---|---|---|---|---|---|---|

AZOL GAS

# KZ 6600 MOUNTS

*Compact Height*

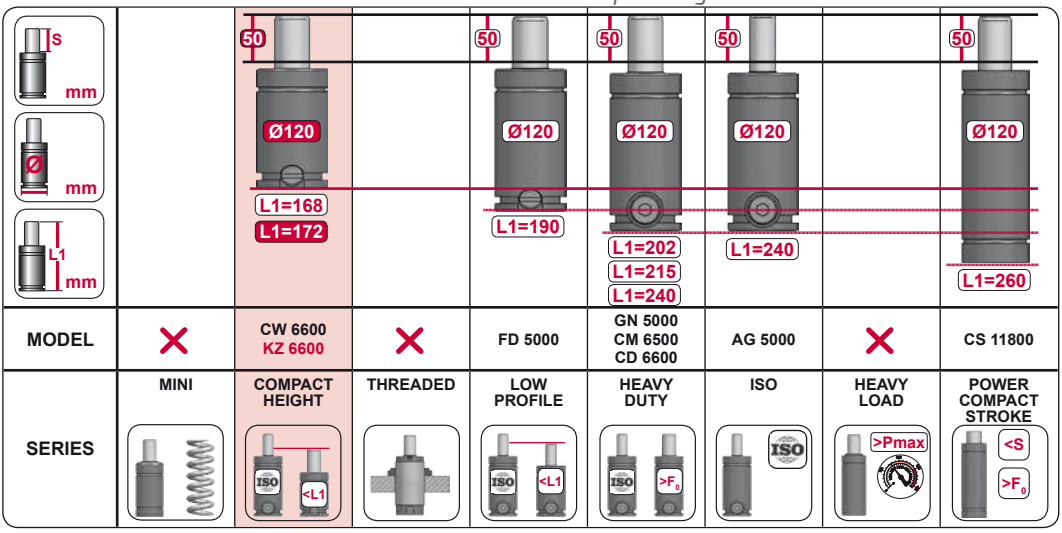


| MODEL | | CW 6600 KZ 6600 | | FD 5000 | GN 5000 CM 6500 CD 6600 | AG 5000 | | CS 11800 |
|---|---|---|---|---|---|---|---|---|
| SERIES | MINI | COMPACT HEIGHT | THREADED | LOW PROFILE | HEAVY DUTY | ISO | HEAVY LOAD | POWER COMPACT STROKE |

## A14-120

E24.54.815.G
EM24.54.700/F

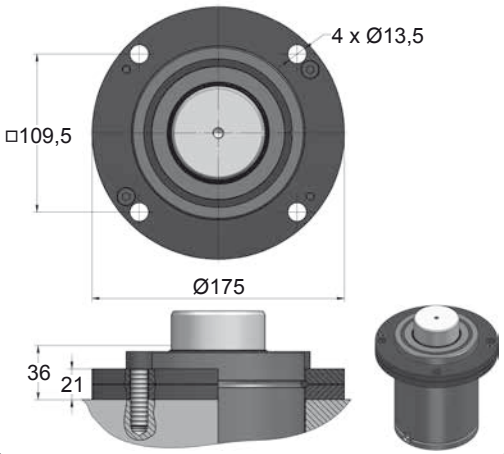


## A34-120

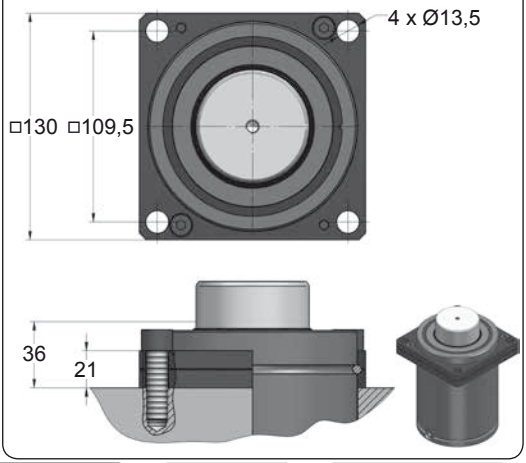





| CODE | | KZ 6600 050 | KIT XXXXXXX-S KIT XXXXXXX-C | A14-120 | 18 GA 5 |
|---|---|---|---|---|---|
| ENG | ORDER | GAS SPRING | REPAIR KIT | FLANGE | CHARGING ADAPTER |
| DEU | BESTELLUNG | GASDRUCKFEDER | ERSATZTEILSATZ | FLANSCHE | LADEADAPTER |
| FRA | COMMANDE | RESSORT À GAZ | KIT DE RÉPARATION | BRIDE | RACCORD DE CHARGE |
| ITA | ORDINE | CILINDRO AD AZOTO | KIT DI MANUTENZIONE | FLANGE | ADATTATORE DI CARICO |
| ESP | PEDIDO | RESORTE DE GAS | KIT DE REPARACION | BRIDA | ADAPTADOR DE CARGA |
| POR | PEDIDO | CILINDRO DE GÁS | KIT DE MANUTENÇÃO | FLANGE | ADAPTADOR DE CARGA |

# KZ 6600 MOUNTS

*Compact Height*

AZOL GAS

## B13-120

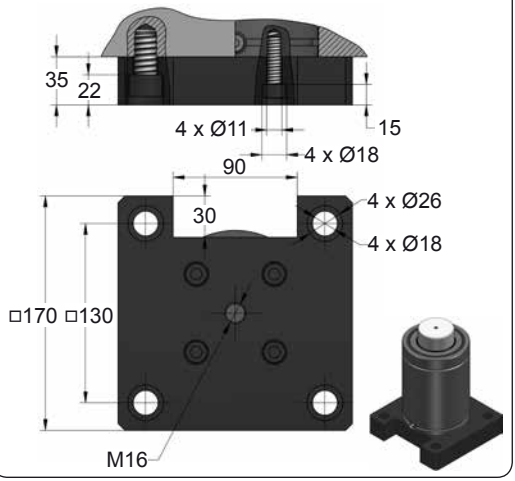


## B18-120

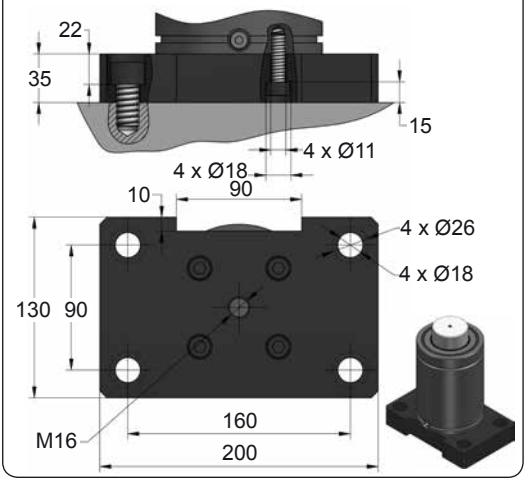


## B23-120

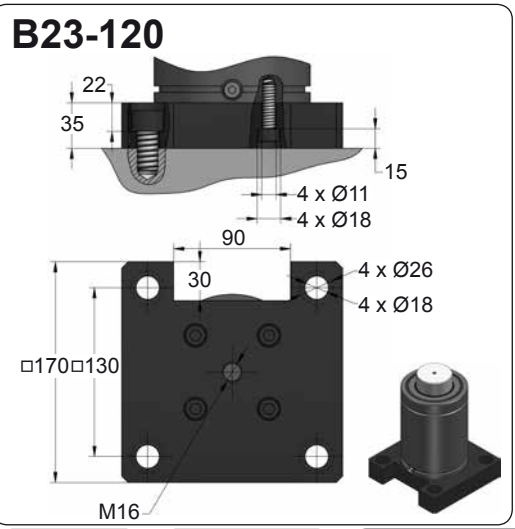


## B28-120

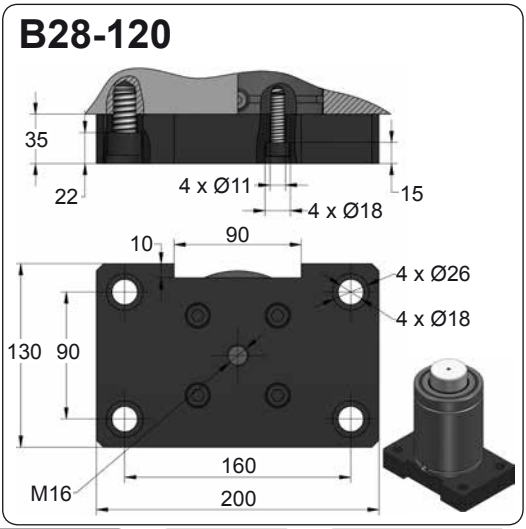









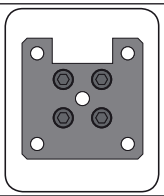

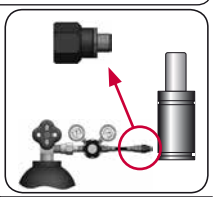

| CODE | | KZ 6600 050 | KIT XXXXXXX-S<br>KIT XXXXXXX-C | B13-120 | 18 GA 5 |
|---|---|---|---|---|---|
| ENG | ORDER | GAS SPRING | REPAIR KIT | FLANGE | CHARGING ADAPTER |
| DEU | BESTELLUNG | GASDRUCKFEDER | ERSATZTEILSATZ | FLANSCHE | LADEADAPTER |
| FRA | COMMANDE | RESSORT À GAZ | KIT DE RÉPARATION | BRIDE | RACCORD DE CHARGE |
| ITA | ORDINE | CILINDRO AD AZOTO | KIT DI MANUTENZIONE | FLANGE | ADATTATORE DI CARICO |
| ESP | PEDIDO | RESORTE DE GAS | KIT DE REPARACION | BRIDA | ADAPTADOR DE CARGA |
| POR | PEDIDO | CILINDRO DE GÁS | KIT DE MANUTENÇÃO | FLANGE | ADAPTADOR DE CARGA |

AZOL GAS

# KZ 6600 MOUNTS

*Compact Height*

## C05-120

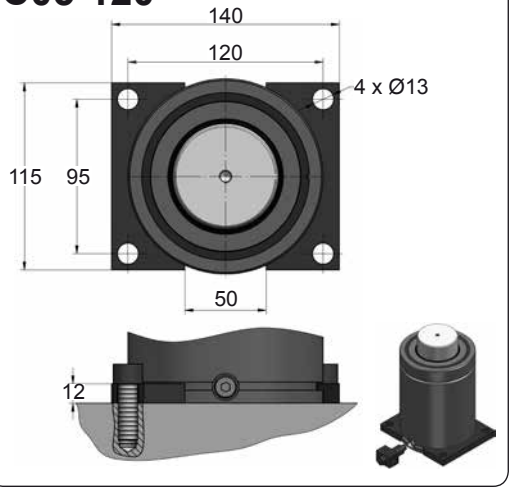


## C20-120

E24.54.815.G
EM24.54.700/F

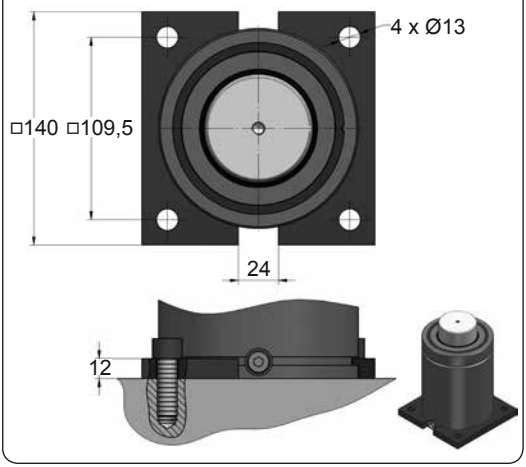


## D02-120

E24.54.815.G
EM24.54.700/F

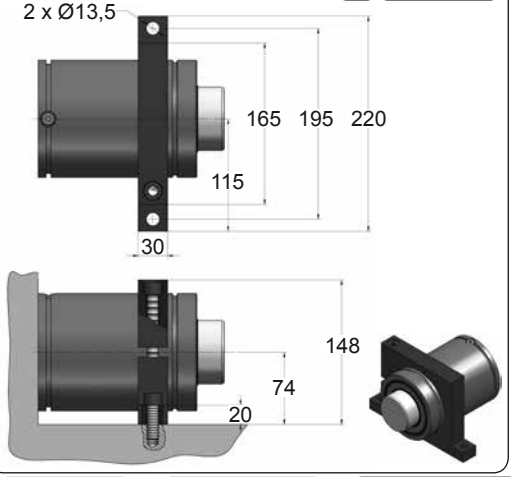


## D67-120

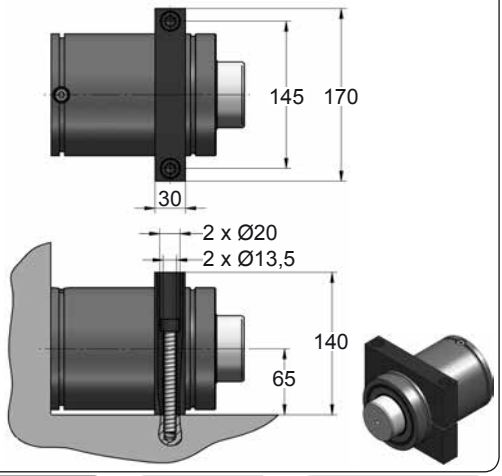









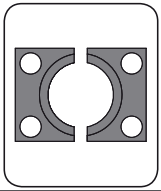

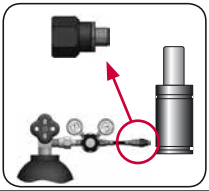

| CODE | | KZ 6600 050 | KIT XXXXXXX-S<br>KIT XXXXXXX-C | C05-120 | 18 GA 5 |
|---|---|---|---|---|---|
| ENG | ORDER | GAS SPRING | REPAIR KIT | FLANGE | CHARGING ADAPTER |
| DEU | BESTELLUNG | GASDRUCKFEDER | ERSATZTEILSATZ | FLANSCHE | LADEADAPTER |
| FRA | COMMANDE | RESSORT À GAZ | KIT DE RÉPARATION | BRIDE | RACCORD DE CHARGE |
| ITA | ORDINE | CILINDRO AD AZOTO | KIT DI MANUTENZIONE | FLANGE | ADATTATORE DI CARICO |
| ESP | PEDIDO | RESORTE DE GAS | KIT DE REPARACION | BRIDA | ADAPTADOR DE CARGA |
| POR | PEDIDO | CILINDRO DE GÁS | KIT DE MANUTENÇÃO | FLANGE | ADAPTADOR DE CARGA |

# AZOL GAS CW COMPACT HEIGHT MEDIUM

| MODEL | $F_0$ | Ø | S | L1 | Pmax | Charge Port | | |
|---|---|---|---|---|---|---|---|---|
| CW 170 V1 | 170 | Ø19 | 7 - 125 | 44 - 285 | 180 | M6 | ✗ | ✗ |
| CW 320 V1 | 320 | Ø25 | 7 - 125 | 44 - 285 | 180 | M6 | ✗ | ✗ |
| CW 350 | 350 | Ø32 | 10 - 125 | 50 - 280 | 180 | M6 | ✓ | ✓ |
| CW 500 | 500 | Ø38 | 10 - 125 | 50 - 280 | 150 | M6 | ✓ | ✓ |
| CW 750 | 750 | Ø45 | 10 - 125 | 52 - 282 | 150 | M6 | ✓ | ✓ |
| CWC 750 V1 | 750 | Ø45 | 10 - 125 | 62 - 292 | 150 | G1/8" | ✓ | ✓ |
| CW 1000 V1 | 1000 | Ø50 | 13 - 125 | 64 - 288 | 150 | M6 | ✓ | ✓ |
| CWC 1000 V2 | 1000 | Ø50 | 13 - 125 | 74 - 298 | 150 | G1/8" | ✓ | ✓ |
| CW 1500 | 1500 | Ø63 | 13 - 125 | 70 - 294 | 150 | M6 | ✓ | ✓ |
| CWC 1500 | 1500 | Ø63 | 13 - 125 | 80 - 304 | 150 | G1/8" | ✓ | ✓ |
| CW 2400 V1 | 2400 | Ø75 | 5 - 125 | 55 - 295 | 150 | M6 | ✓ | ✓ |
| CWC 2400 V2 | 2400 | Ø75 | 10 - 125 | 75 - 305 | 150 | G1/8" | ✓ | ✓ |
| CW 4200 V1 | 4200 | Ø95 | 16 - 125 | 90 - 308 | 150 | G1/8" | ✓ | ✓ |
| CW 6600 | 6600 | Ø120 | 16 - 125 | 100 - 318 | 150 | G1/8" | ✓ | ✓ |
| CW 9500 | 9500 | Ø150 | 19 - 125 | 116 - 328 | 150 | G1/8" | ✓ | ✓ |
| CW 11800 | 11800 | Ø150 | 19 - 125 | 116 - 328 | 150 | G1/8" | ✓ | ✓ |
| CW 20000 | 20000 | Ø195 | 19 - 125 | 148 - 360 | 150 | G1/8" | ✓ | ✓ |

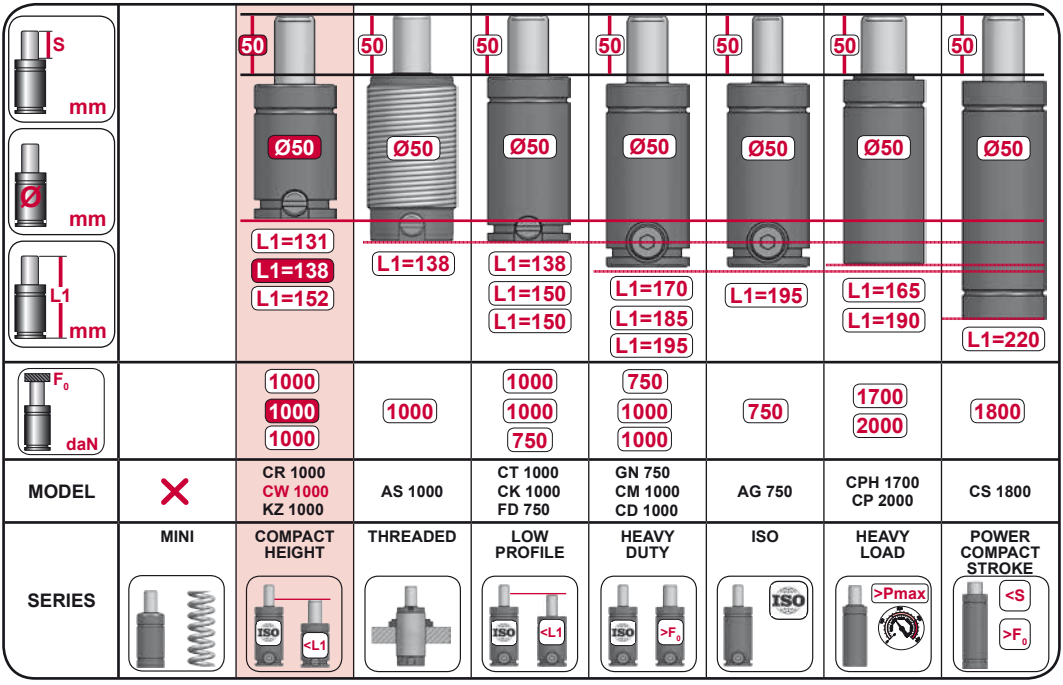

# CW 170 V1

*Compact Height*

| | | | |
|---|---|---|---|
| BMW | B2 4005 | | |
| MB | B8 3180 220 000 004 | | |
| VW | 39D 997 | | |

AZOL GAS

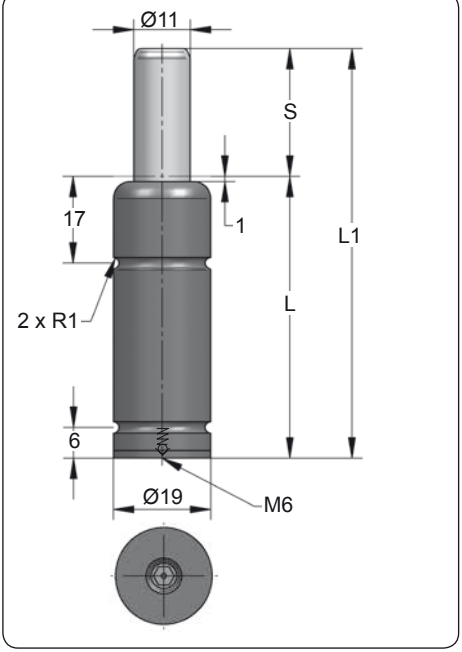


| ORDER | S (mm) | L1 ±0,25 (mm) | L (mm) | Kg. |
|---|---|---|---|---|
| CW 170 007 V1 | 7 | 44 | 37 | 0.06 |
| CW 170 010 V1 | 10 | 50 | 40 | 0.06 |
| CW 170 013 V1 | 13 | 56 | 43 | 0.07 |
| CW 170 015 V1 | 15 | 60 | 45 | 0.07 |
| CW 170 019 V1 | 19 | 68 | 49 | 0.08 |
| CW 170 025 V1 | 25 | 80 | 55 | 0.09 |
| CW 170 032 V1 | 32 | 94 | 62 | 0.10 |
| CW 170 038 V1 | 38 | 106 | 68 | 0.11 |
| CW 170 050 V1 | 50 | 130 | 80 | 0.13 |
| CW 170 063 V1 | 63 | 156 | 93 | 0.15 |
| CW 170 075 V1 | 75 | 185 | 110 | 0.18 |
| CW 170 080 V1 | 80 | 195 | 115 | 0.19 |
| CW 170 100 V1 | 100 | 235 | 135 | 0.22 |
| CW 170 125 V1 | 125 | 285 | 160 | 0.26 |

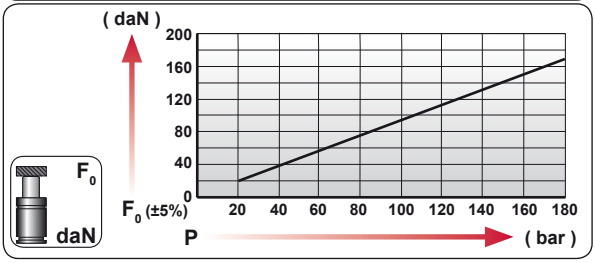


| CODE | bar | psi | F0 daN | F1 daN |
|---|---|---|---|---|
| CW 170 050 V1 | 180 | 2610 | 170 | 340 |
| --------- | --- | --- | --- | --- |

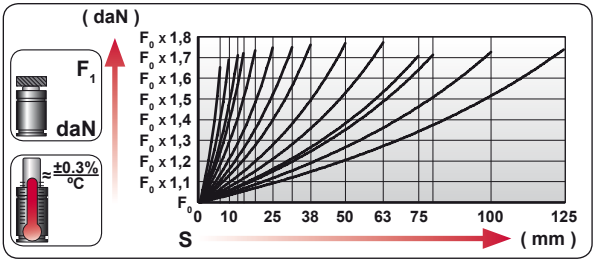


| | |
|---|---|
| ENG | ORDER |
| DEU | BESTELLUNG |
| FRA | COMMANDE |
| ITA | ORDINE |
| ESP | PEDIDO |
| POR | PEDIDO |




CW 170 50

CW 170 050 V1

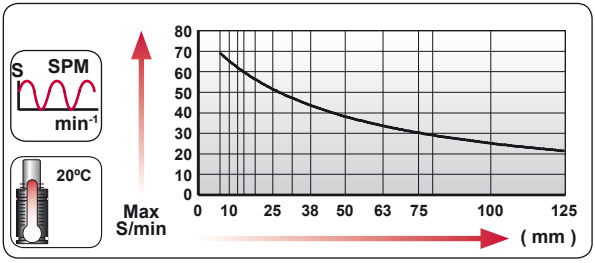





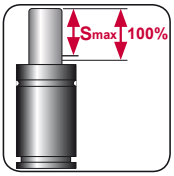


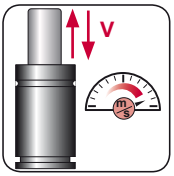


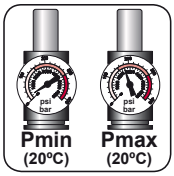


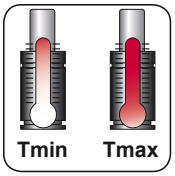




| $N_2$ | Smax < 90% | Vmax 1,6 m/s | bar psi 20 290 | bar psi 180 2610 | °C °F 0 32 | °C °F 80 176 | |
|---|---|---|---|---|---|---|---|

AZOL GAS

# CW 170 V1 *MOUNTS*

*Compact Height*

## A14-019

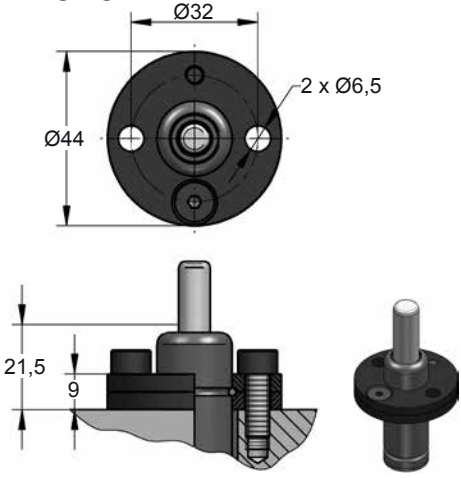


## A44-019

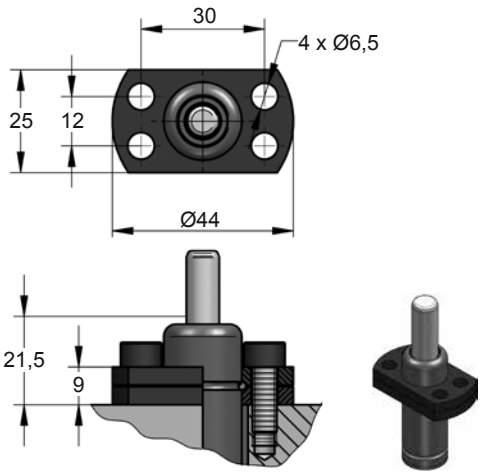









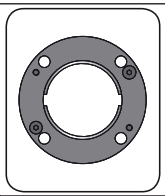

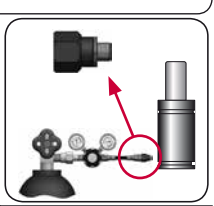

| CODE | | CW 170 050 V1 | | A14-019 | 06 GA 11 |
|---|---|---|---|---|---|
| ENG | ORDER | GAS SPRING | REPAIR KIT | FLANGE | CHARGING ADAPTER |
| DEU | BESTELLUNG | GASDRUCKFEDER | ERSATZTEILSATZ | FLANSCHE | LADEADAPTER |
| FRA | COMMANDE | RESSORT À GAZ | KIT DE RÉPARATION | BRIDE | RACCORD DE CHARGE |
| ITA | ORDINE | CILINDRO AD AZOTO | KIT DI MANUTENZIONE | FLANGE | ADATTATORE DI CARICO |
| ESP | PEDIDO | RESORTE DE GAS | KIT DE REPARACION | BRIDA | ADAPTADOR DE CARGA |
| POR | PEDIDO | CILINDRO DE GÁS | KIT DE MANUTENÇÃO | FLANGE | ADAPTADOR DE CARGA |

# CW 320 V1

*Compact Height*

AZOL GAS

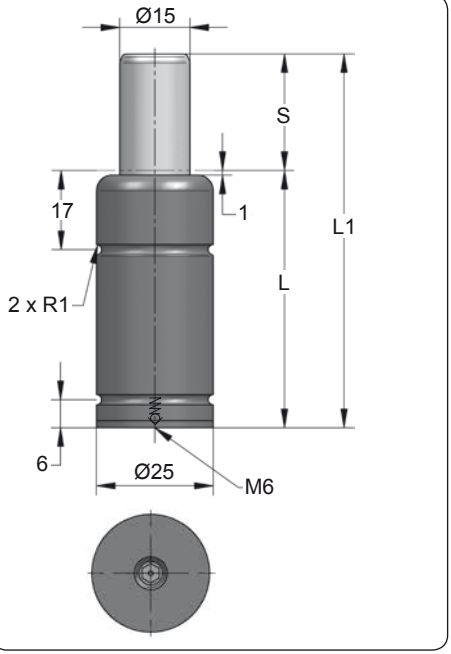


| ORDER | S (mm) | L1 ±0,25 (mm) | L (mm) | Kg. |
|---|---|---|---|---|
| CW 320 007 V1 | 7 | 44 | 37 | 0.11 |
| CW 320 010 V1 | 10 | 50 | 40 | 0.12 |
| CW 320 012 V1 | 12 | 54 | 42 | 0.13 |
| CW 320 015 V1 | 15 | 60 | 45 | 0.13 |
| CW 320 019 V1 | 19 | 68 | 49 | 0.15 |
| CW 320 025 V1 | 25 | 80 | 55 | 0.16 |
| CW 320 032 V1 | 32 | 94 | 62 | 0.18 |
| CW 320 038 V1 | 38 | 106 | 68 | 0.20 |
| CW 320 050 V1 | 50 | 130 | 80 | 0.24 |
| CW 320 063 V1 | 63 | 156 | 93 | 0.28 |
| CW 320 075 V1 | 75 | 185 | 110 | 0.32 |
| CW 320 080 V1 | 80 | 195 | 115 | 0.33 |
| CW 320 100 V1 | 100 | 235 | 135 | 0.39 |
| CW 320 125 V1 | 125 | 285 | 160 | 0.46 |

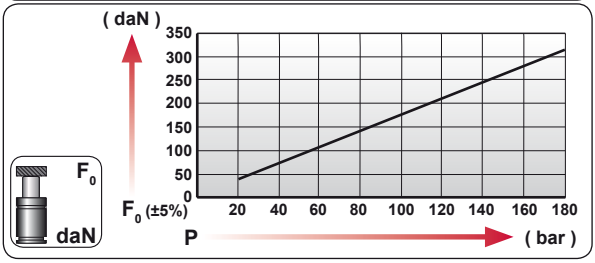


| CODE | bar | psi | $F_0$ daN | $F_1$ daN |
|---|---|---|---|---|
| CW 320 050 V1 | 180 | 2610 | 320 | 670 |
| --------- | --- | --- | --- | --- |

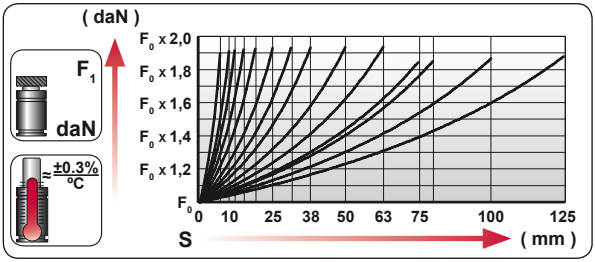


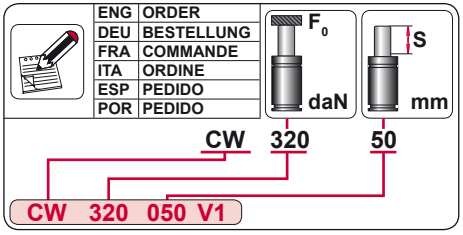


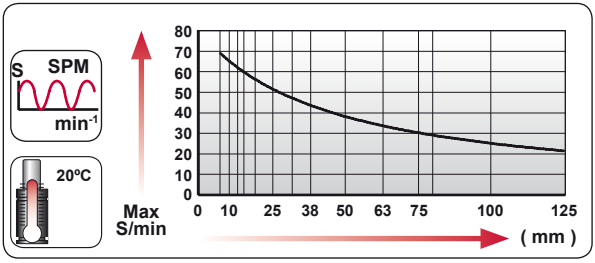


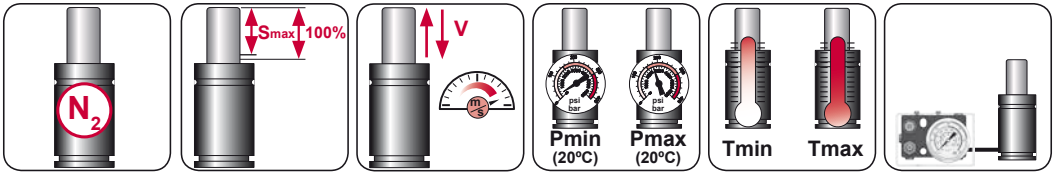


| $N_2$ | Smax < 90% | Vmax 1,6 m/s | bar psi 20 290 | bar psi 180 2610 | ºC ºF 0 32 | ºC ºF 80 176 | |
|---|---|---|---|---|---|---|---|

AZOL GAS

# CW 320 V1 MOUNTS

*Compact Height*

## A44-025

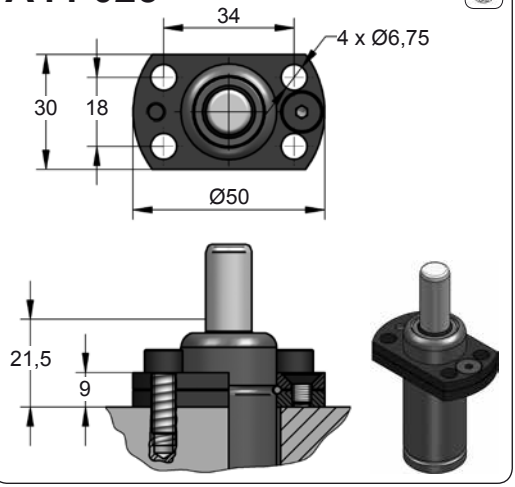


## A49-025

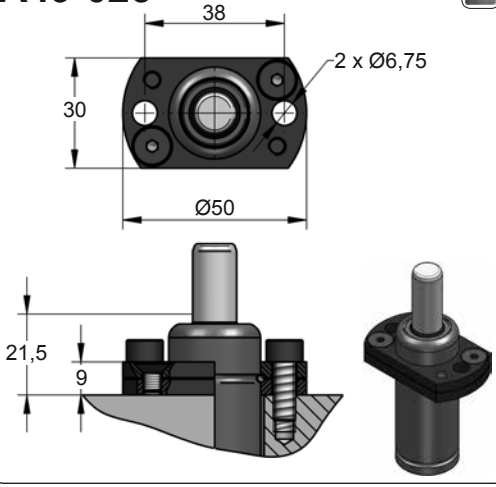


## D02-025

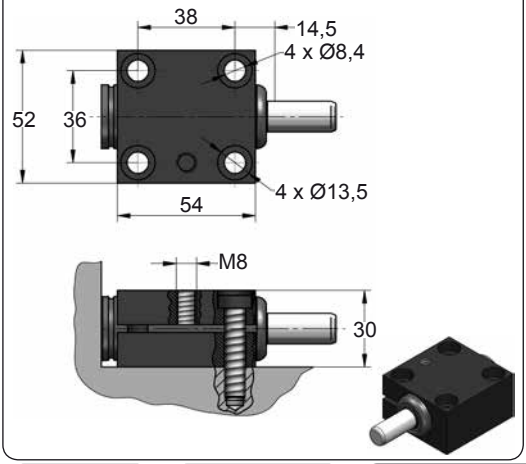





| CODE | | CW 320 050 V1 | | A44-025 | 06 GA 11 |
|---|---|---|---|---|---|
| ENG | ORDER | GAS SPRING | REPAIR KIT | FLANGE | CHARGING ADAPTER |
| DEU | BESTELLUNG | GASDRUCKFEDER | ERSATZTEILSATZ | FLANSCHE | LADEADAPTER |
| FRA | COMMANDE | RESSORT À GAZ | KIT DE RÉPARATION | BRIDE | RACCORD DE CHARGE |
| ITA | ORDINE | CILINDRO AD AZOTO | KIT DI MANUTENZIONE | FLANGE | ADATTATORE DI CARICO |
| ESP | PEDIDO | RESORTE DE GAS | KIT DE REPARACION | BRIDA | ADAPTADOR DE CARGA |
| POR | PEDIDO | CILINDRO DE GÁS | KIT DE MANUTENÇÃO | FLANGE | ADAPTADOR DE CARGA |

# CW 350

*Compact Height*

| | | | |
|---|---|---|---|
| **BMW** | B2 4005 | **FORD** | W-DX35-6204 |
| **MB** | B8 3180 220 000 004 | | |
| **VW** | 39D 997 | | |

AZOL GAS

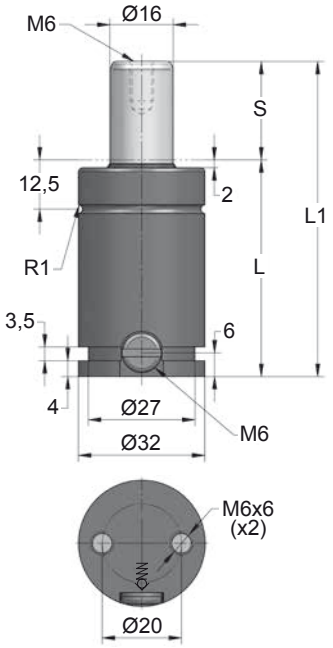


| ORDER | S (mm) | L1 ±0,25 (mm) | L (mm) | Kg. |
|---|---|---|---|---|
| CW 350 010 | 10 | 50 | 40 | 0.18 |
| CW 350 013 | 13 | 56 | 43 | 0.20 |
| CW 350 016 | 16 | 62 | 46 | 0.21 |
| CW 350 019 | 19 | 68 | 49 | 0.22 |
| CW 350 025 | 25 | 80 | 55 | 0.24 |
| CW 350 032 | 32 | 94 | 62 | 0.26 |
| CW 350 038 | 38 | 106 | 68 | 0.29 |
| CW 350 050 | 50 | 130 | 80 | 0.33 |
| CW 350 063 | 63 | 156 | 93 | 0.39 |
| CW 350 075 | 75 | 180 | 105 | 0.43 |
| CW 350 080 | 80 | 190 | 110 | 0.44 |
| CW 350 100 | 100 | 230 | 130 | 0.52 |
| CW 350 125 | 125 | 280 | 155 | 0.62 |

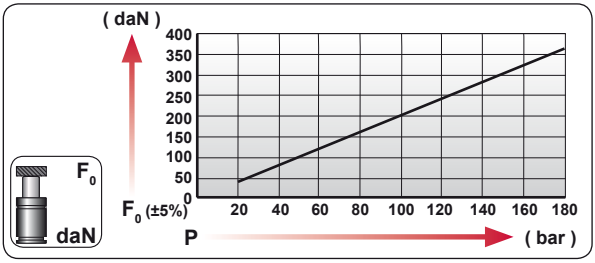


| CODE | bar | psi | $F_0$ daN | $F_1$ daN |
|---|---|---|---|---|
| CW 350 050 | 180 | 2610 | 360 | 575 |
| CW-H 350 050 | 0 | 0 | --- | --- |

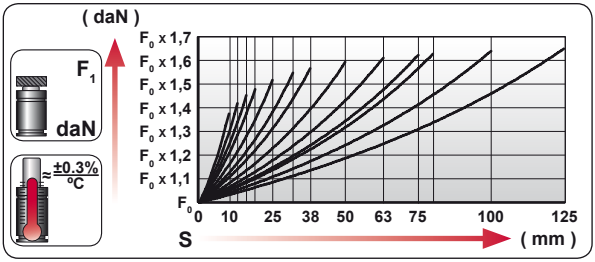


| ENG | ORDER |
|---|---|
| DEU | BESTELLUNG |
| FRA | COMMANDE |
| ITA | ORDINE |
| ESP | PEDIDO |
| POR | PEDIDO |

$F_0$ daN — S mm

CW 350 50

CW 350 050

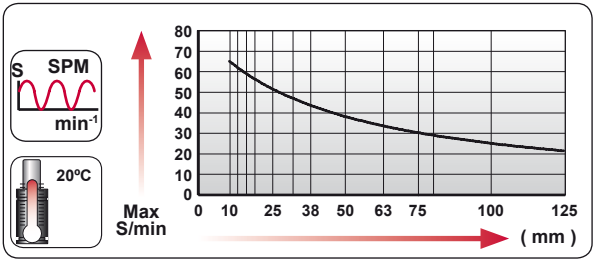


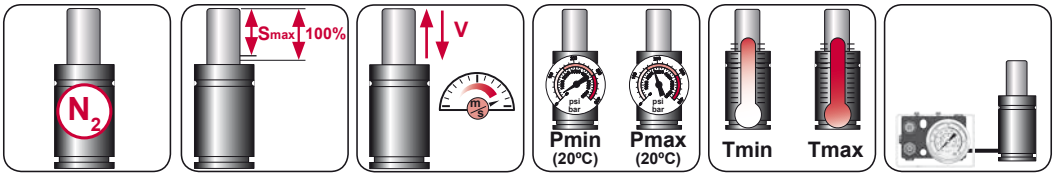


| $N_2$ | Smax < 90% | Vmax 1,6 m/s | bar psi 20 290 | bar psi 180 2610 | ºC ºF 0 32 | ºC ºF 80 176 | 600 CP- |
|---|---|---|---|---|---|---|---|

AZOL GAS

# CW 350 MOUNTS

*Compact Height*

## A14-032

ISO E24.54.815.G EM24.54.700/F

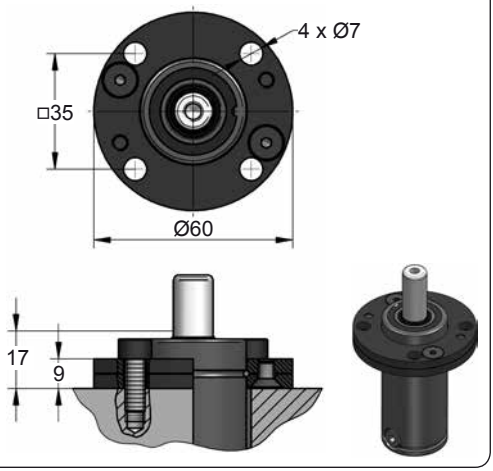


## A34-032

VDI

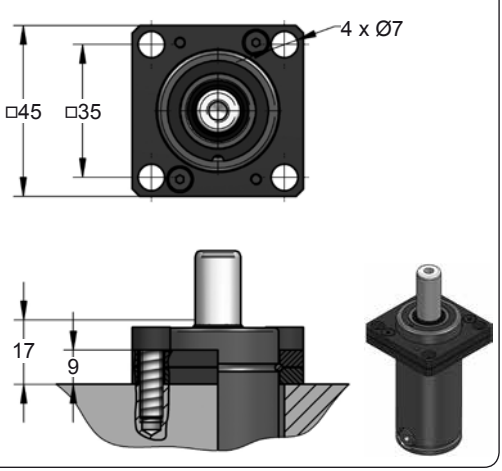


## C20-032

VDI E24.54.815.G EM24.54.700/F

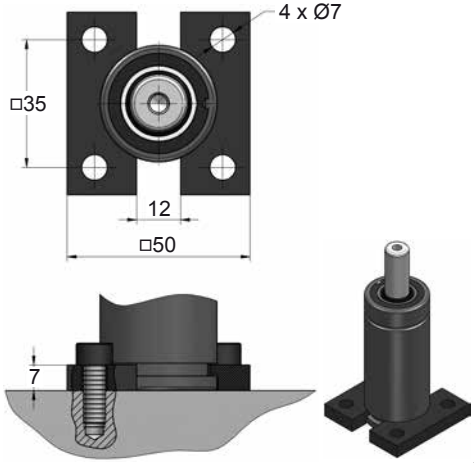


## D02-032

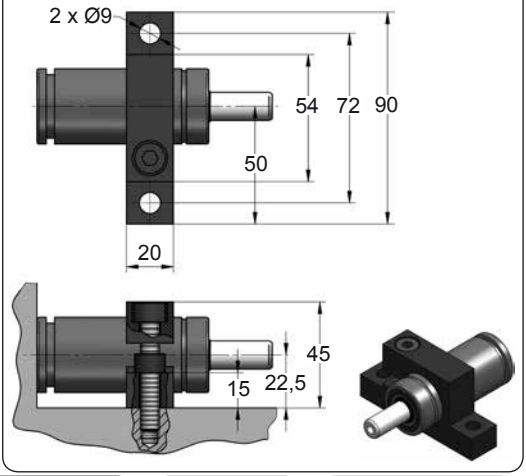









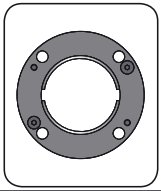

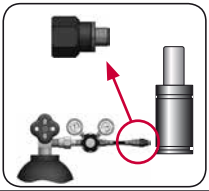

| CODE | | CW 350 050 | KIT XXXXXXX-S<br>KIT XXXXXXX-C | A14-032 | 06 GA 11 |
|---|---|---|---|---|---|
| ENG | ORDER | GAS SPRING | REPAIR KIT | FLANGE | CHARGING ADAPTER |
| DEU | BESTELLUNG | GASDRUCKFEDER | ERSATZTEILSATZ | FLANSCHE | LADEADAPTER |
| FRA | COMMANDE | RESSORT À GAZ | KIT DE RÉPARATION | BRIDE | RACCORD DE CHARGE |
| ITA | ORDINE | CILINDRO AD AZOTO | KIT DI MANUTENZIONE | FLANGE | ADATTATORE DI CARICO |
| ESP | PEDIDO | RESORTE DE GAS | KIT DE REPARACION | BRIDA | ADAPTADOR DE CARGA |
| POR | PEDIDO | CILINDRO DE GÁS | KIT DE MANUTENÇÃO | FLANGE | ADAPTADOR DE CARGA |

# CW 500

*Compact Height*

| | | | | | |
|---|---|---|---|---|---|
| **BMW** | B2 4005 | **FORD** | W-DX35-6204 | **PSA** | E24.54.815.G |
| **MB** | B8 3180 220 000 004 | | | | |
| **VW** | 39D 997 | | | **NISSAN** | K32H |

AZOL GAS

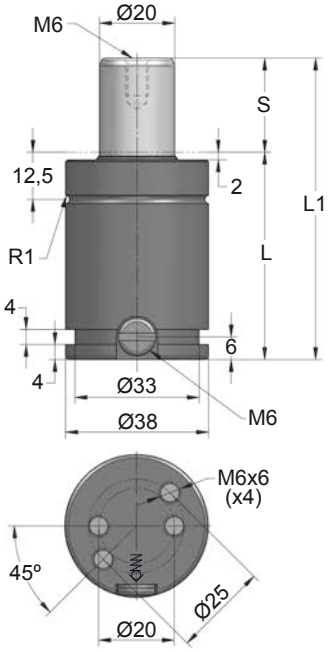


| ORDER | S (mm) | L1 ±0,25 (mm) | L (mm) | Kg. |
|---|---|---|---|---|
| CW 500 010 | 10 | 50 | 40 | 0.26 |
| CW 500 013 | 13 | 56 | 43 | 0.27 |
| CW 500 016 | 16 | 62 | 46 | 0.29 |
| CW 500 019 | 19 | 68 | 49 | 0.30 |
| CW 500 025 | 25 | 80 | 55 | 0.33 |
| CW 500 032 | 32 | 94 | 62 | 0.37 |
| CW 500 038 | 38 | 106 | 68 | 0.40 |
| CW 500 050 | 50 | 130 | 80 | 0.47 |
| CW 500 063 | 63 | 156 | 93 | 0.52 |
| CW 500 075 | 75 | 180 | 105 | 0.58 |
| CW 500 080 | 80 | 190 | 110 | 0.62 |
| CW 500 100 | 100 | 230 | 130 | 0.72 |
| CW 500 125 | 125 | 280 | 155 | 0.83 |

PED 2014/68/UE · VDI · CNOMO

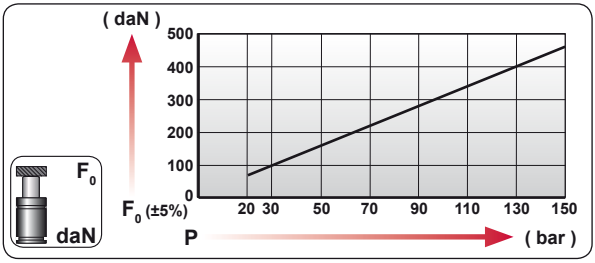


| CODE | bar | psi | $F_0$ daN | $F_1$ daN |
|---|---|---|---|---|
| CW 500 050 | 150 | 2175 | 470 | 750 |
| CW-H 500 050 | 0 | 0 | --- | --- |

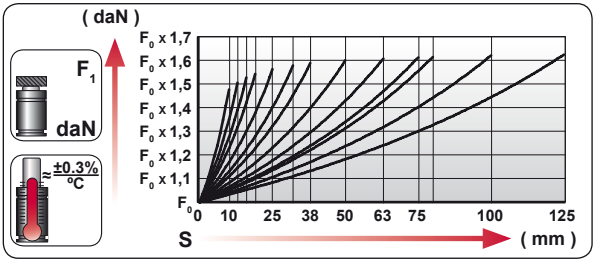


| | |
|---|---|
| ENG | ORDER |
| DEU | BESTELLUNG |
| FRA | COMMANDE |
| ITA | ORDINE |
| ESP | PEDIDO |
| POR | PEDIDO |




CW 500 50

CW 500 050

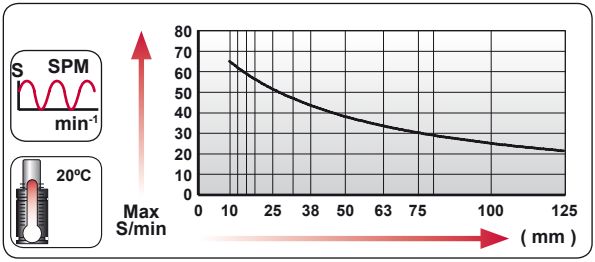


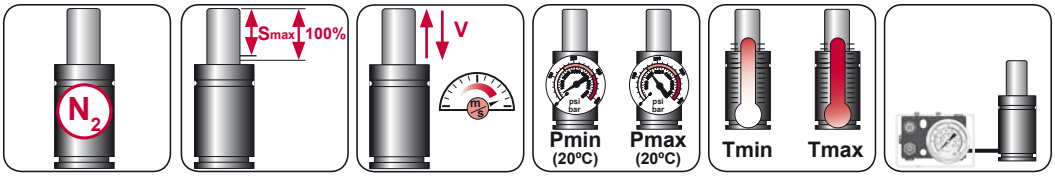


| $N_2$ | Smax < 90% | Vmax 1,6 m/s | bar psi 20 290 | bar psi 150 2175 | °C °F 0 32 | °C °F 80 176 | 600 CP- |
|---|---|---|---|---|---|---|---|

AZOL GAS

# CW 500 MOUNTS

*Compact Height*

## A14-038

ISO | E24.54.815.G EM24.54.700/F

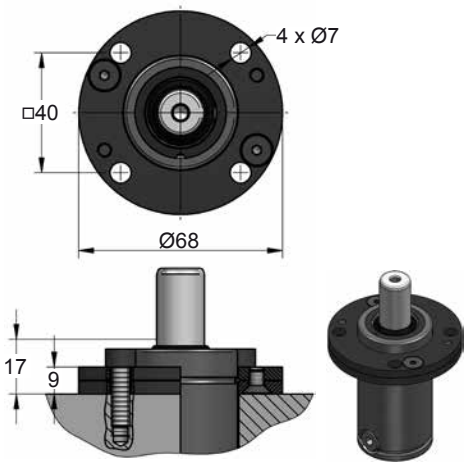


## A34-038

ISO | VDI

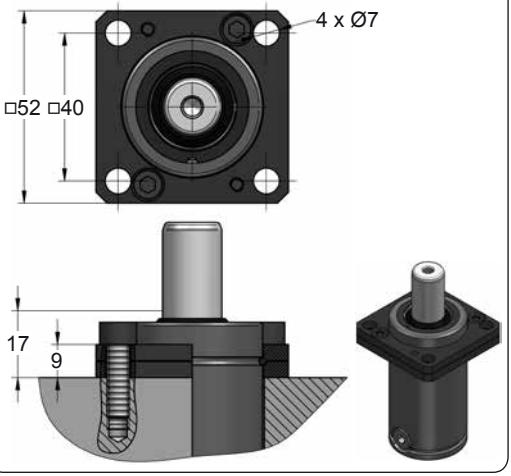


## C20-038

ISO | VDI | E24.54.815.G EM24.54.700/F

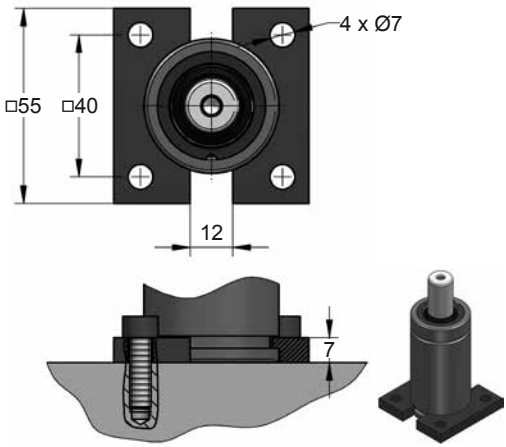


## D02-038

E24.54.815.G

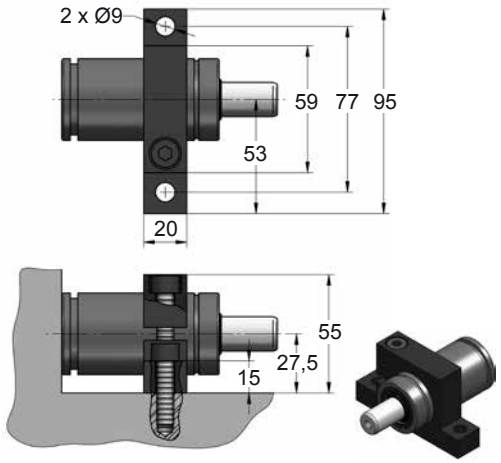









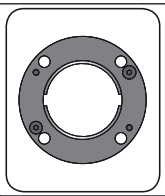

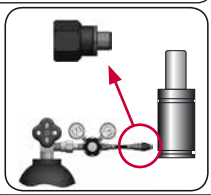

| CODE | | CW 500 050 | KIT XXXXXXX-S<br>KIT XXXXXXX-C | A14-038 | 06 GA 11 |
|---|---|---|---|---|---|
| ENG | ORDER | GAS SPRING | REPAIR KIT | FLANGE | CHARGING ADAPTER |
| DEU | BESTELLUNG | GASDRUCKFEDER | ERSATZTEILSATZ | FLANSCHE | LADEADAPTER |
| FRA | COMMANDE | RESSORT À GAZ | KIT DE RÉPARATION | BRIDE | RACCORD DE CHARGE |
| ITA | ORDINE | CILINDRO AD AZOTO | KIT DI MANUTENZIONE | FLANGE | ADATTATORE DI CARICO |
| ESP | PEDIDO | RESORTE DE GAS | KIT DE REPARACION | BRIDA | ADAPTADOR DE CARGA |
| POR | PEDIDO | CILINDRO DE GÁS | KIT DE MANUTENÇÃO | FLANGE | ADAPTADOR DE CARGA |

# CW 750

*Compact Height*

| | | | | | |
|---|---|---|---|---|---|
| **BMW** | B2 4005 | **FORD** | W-DX35-6204 | **PSA** | E24.54.815.G |
| **MB** | B8 3180 220 000 004 | | | | |
| **VW** | 39D 997 | | | | |

AZOL GAS

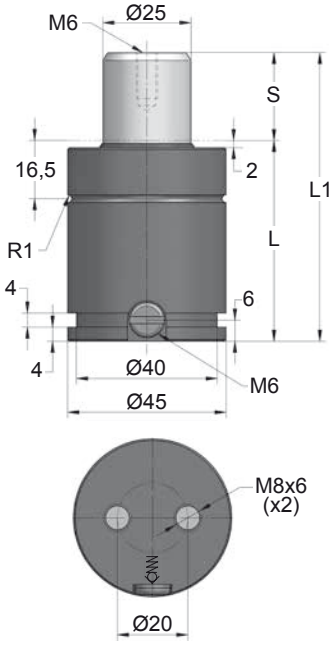


| ORDER | S (mm) | L1 ±0,25 (mm) | L (mm) | Kg. |
|---|---|---|---|---|
| CW 750 010 | 10 | 52 | 42 | 0.37 |
| CW 750 013 | 13 | 58 | 45 | 0.39 |
| CW 750 016 | 16 | 64 | 48 | 0.41 |
| CW 750 019 | 19 | 70 | 51 | 0.43 |
| CW 750 025 | 25 | 82 | 57 | 0.49 |
| CW 750 032 | 32 | 96 | 64 | 0.50 |
| CW 750 038 | 38 | 108 | 70 | 0.57 |
| CW 750 050 | 50 | 132 | 82 | 0.69 |
| CW 750 063 | 63 | 158 | 95 | 0.73 |
| CW 750 075 | 75 | 182 | 107 | 0.80 |
| CW 750 080 | 80 | 192 | 112 | 0.84 |
| CW 750 100 | 100 | 232 | 132 | 0.97 |
| CW 750 125 | 125 | 282 | 157 | 1.10 |

PED 2014/68/UE

VDI

CNOMO

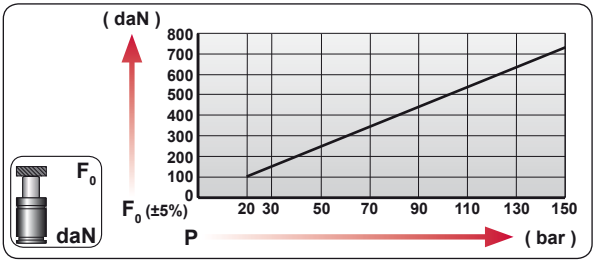


| CODE | | bar | psi | $F_0$ daN | $F_1$ daN |
|---|---|---|---|---|---|
| CW 750 050 | | 150 | 2175 | 740 | 1215 |
| CW-H 750 050 | | 0 | 0 | --- | --- |

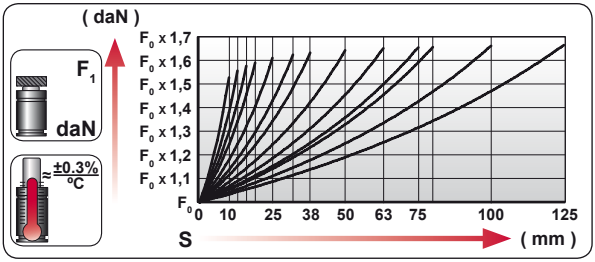


| | |
|---|---|
| ENG | ORDER |
| DEU | BESTELLUNG |
| FRA | COMMANDE |
| ITA | ORDINE |
| ESP | PEDIDO |
| POR | PEDIDO |

$F_0$ daN — S mm

CW 750 50

CW 750 050

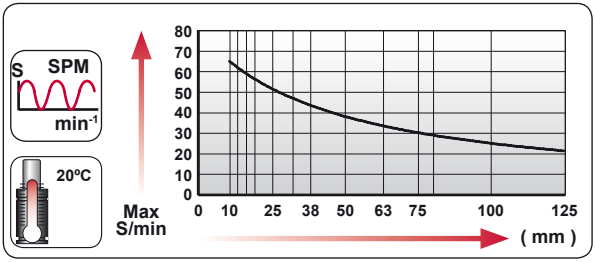


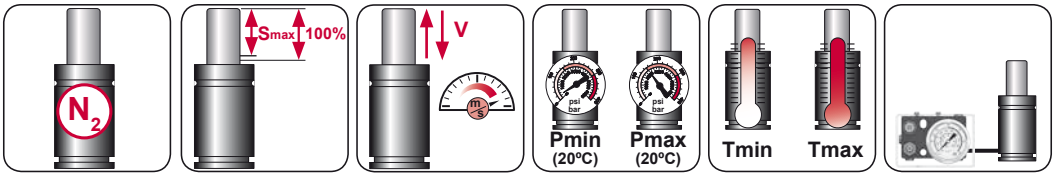


| $N_2$ | Smax < 90% | Vmax 1,6 m/s | bar psi 20 290 | bar psi 150 2175 | ºC ºF 0 32 | ºC ºF 80 176 | 600 CP- |
|---|---|---|---|---|---|---|---|

AZOL GAS

# CW 750
*Compact Height*

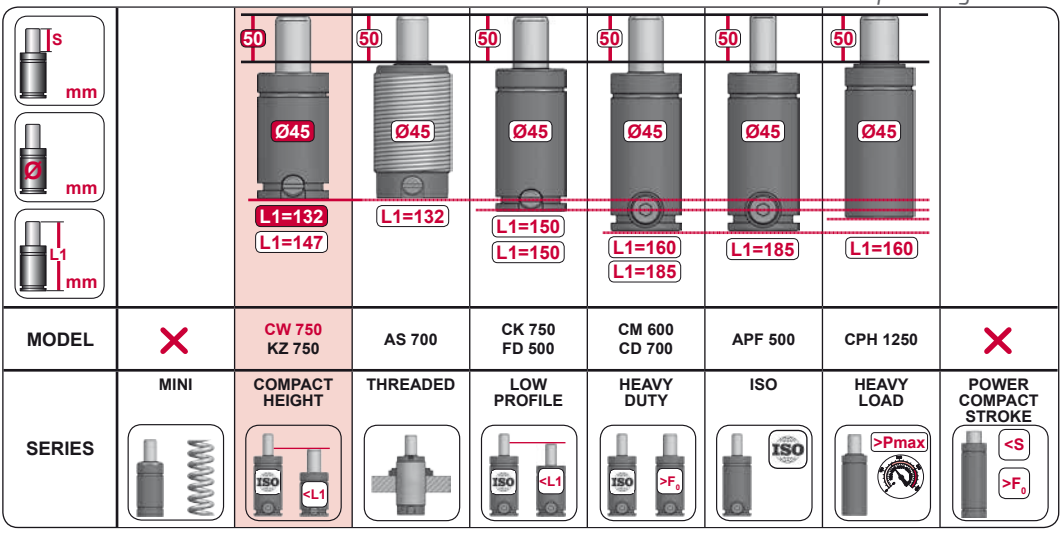


| MODEL | | CW 750 KZ 750 | AS 700 | CK 750 FD 500 | CM 600 CD 700 | APF 500 | CPH 1250 | |
|---|---|---|---|---|---|---|---|---|
| SERIES | MINI | COMPACT HEIGHT | THREADED | LOW PROFILE | HEAVY DUTY | ISO | HEAVY LOAD | POWER COMPACT STROKE |

## CW

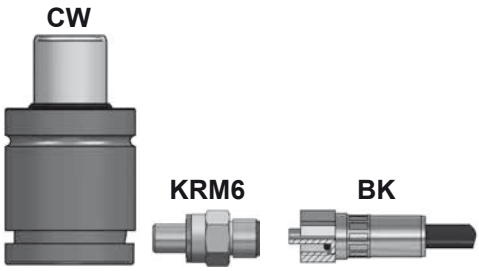


## CWC

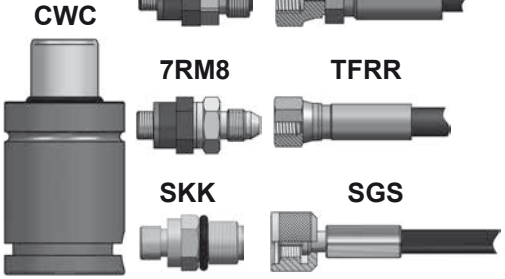









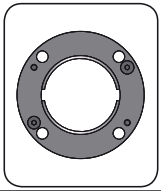

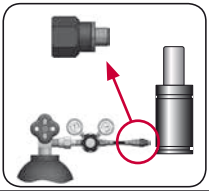

| CODE | | CW 750 050 | KIT XXXXXXX-S KIT XXXXXXX-C | A14-045 | 06 GA 11 |
|---|---|---|---|---|---|
| ENG | ORDER | GAS SPRING | REPAIR KIT | FLANGE | CHARGING ADAPTER |
| DEU | BESTELLUNG | GASDRUCKFEDER | ERSATZTEILSATZ | FLANSCHE | LADEADAPTER |
| FRA | COMMANDE | RESSORT À GAZ | KIT DE RÉPARATION | BRIDE | RACCORD DE CHARGE |
| ITA | ORDINE | CILINDRO AD AZOTO | KIT DI MANUTENZIONE | FLANGE | ADATTATORE DI CARICO |
| ESP | PEDIDO | RESORTE DE GAS | KIT DE REPARACION | BRIDA | ADAPTADOR DE CARGA |
| POR | PEDIDO | CILINDRO DE GÁS | KIT DE MANUTENÇÃO | FLANGE | ADAPTADOR DE CARGA |

# CWC 750 V1

*Compact Height*

AZOL GAS

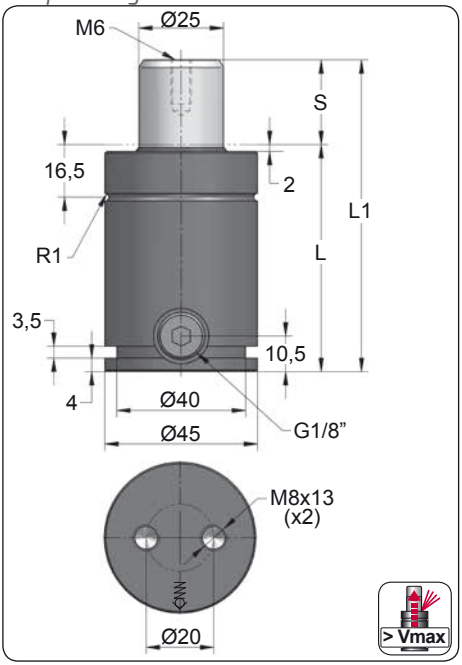


| ORDER | S (mm) | L1 ±0,25 (mm) | L (mm) | Kg. |
|---|---|---|---|---|
| CWC 750 010 V1 | 10 | 62 | 52 | 0.39 |
| CWC 750 013 V1 | 13 | 68 | 55 | 0.41 |
| CWC 750 016 V1 | 16 | 74 | 58 | 0.43 |
| CWC 750 019 V1 | 19 | 80 | 61 | 0.45 |
| CWC 750 025 V1 | 25 | 92 | 67 | 0.51 |
| CWC 750 032 V1 | 32 | 106 | 74 | 0.53 |
| CWC 750 038 V1 | 38 | 118 | 80 | 0.60 |
| CWC 750 050 V1 | 50 | 142 | 92 | 0.73 |
| CWC 750 063 V1 | 63 | 168 | 105 | 0.76 |
| CWC 750 075 V1 | 75 | 192 | 117 | 0.84 |
| CWC 750 080 V1 | 80 | 202 | 122 | 0.88 |
| CWC 750 100 V1 | 100 | 242 | 142 | 1.02 |
| CWC 750 125 V1 | 125 | 292 | 167 | 1.20 |

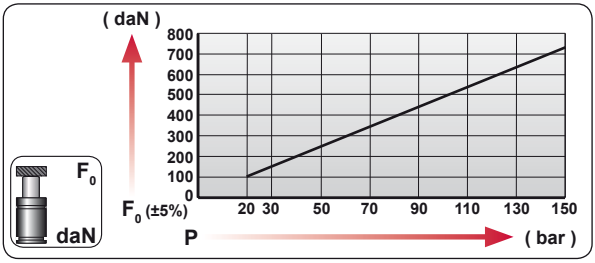


| CODE | bar | psi | $F_0$ daN | $F_1$ daN |
|---|---|---|---|---|
| CWC 750 050 V1 | 150 | 2175 | 740 | 1215 |
| CWC-H 750 050 V1 | 0 | 0 | --- | --- |

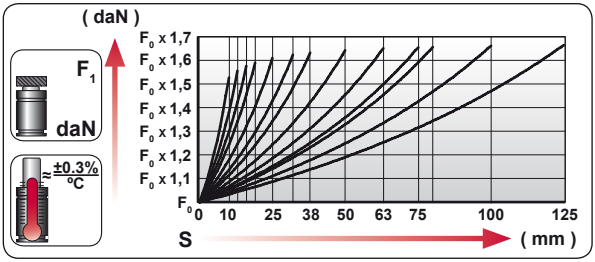


| | |
|---|---|
| ENG | ORDER |
| DEU | BESTELLUNG |
| FRA | COMMANDE |
| ITA | ORDINE |
| ESP | PEDIDO |
| POR | PEDIDO |




CWC 750 50

CWC 750 050 V1

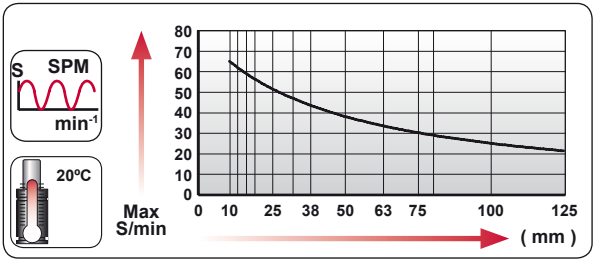


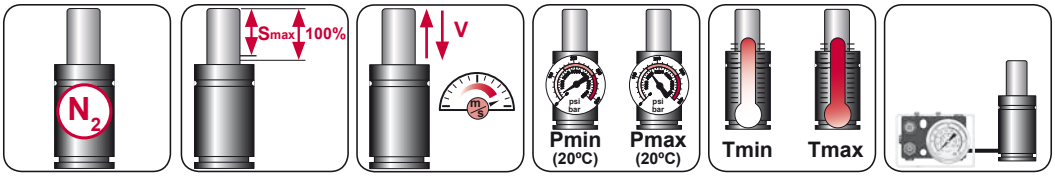


| $N_2$ | Smax < 90% | Vmax 1,6 m/s | bar psi 20 290 | bar psi 150 2175 | °C °F 0 32 | °C °F 80 176 | 600 CP- |
|---|---|---|---|---|---|---|---|

AZOL GAS

# CWC 750 V1

*Compact Height*




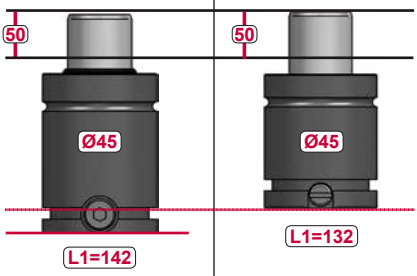


| MODEL | CWC 750 | CW 750 |
|---|---|---|

## CW

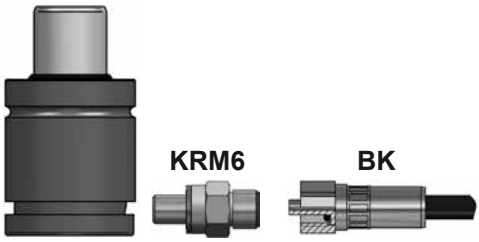


## CWC

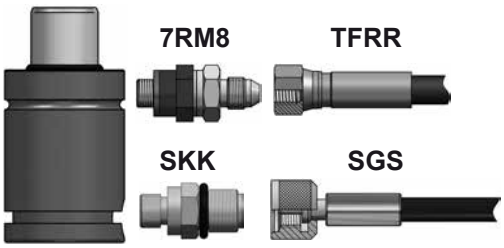









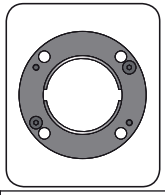

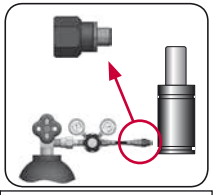

| CODE | | CWC 750 050 V1 | KIT XXXXXXX-S<br>KIT XXXXXXX-C | A14-045 | 18 GA 5 |
|---|---|---|---|---|---|
| ENG | ORDER | GAS SPRING | REPAIR KIT | FLANGE | CHARGING ADAPTER |
| DEU | BESTELLUNG | GASDRUCKFEDER | ERSATZTEILSATZ | FLANSCHE | LADEADAPTER |
| FRA | COMMANDE | RESSORT À GAZ | KIT DE RÉPARATION | BRIDE | RACCORD DE CHARGE |
| ITA | ORDINE | CILINDRO AD AZOTO | KIT DI MANUTENZIONE | FLANGE | ADATTATORE DI CARICO |
| ESP | PEDIDO | RESORTE DE GAS | KIT DE REPARACION | BRIDA | ADAPTADOR DE CARGA |
| POR | PEDIDO | CILINDRO DE GÁS | KIT DE MANUTENÇÃO | FLANGE | ADAPTADOR DE CARGA |

# CWC 750 V1 MOUNTS

*Compact Height*

AZOL GAS

## A14-045

ISO E24.54.815.G EM24.54.700/F

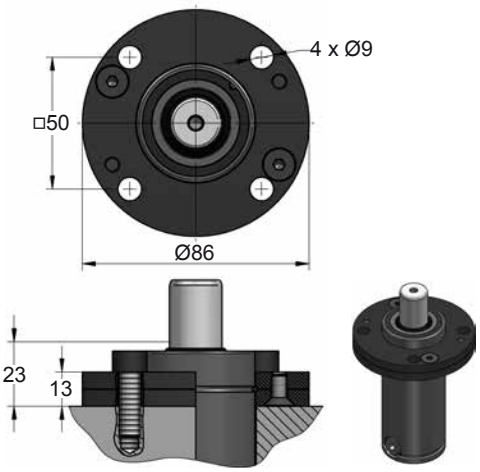


## A34-045

ISO VDI

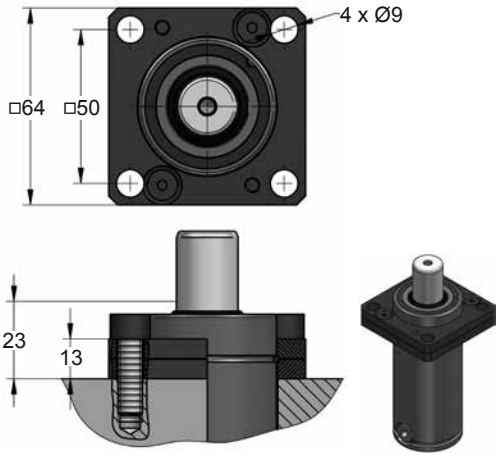


## B36-045

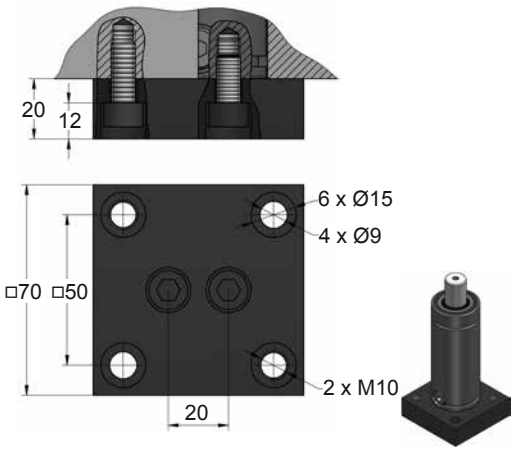


## B41-045

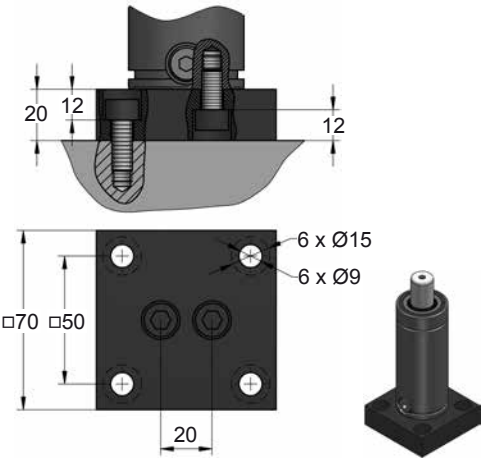









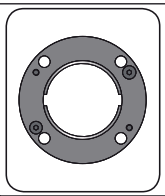

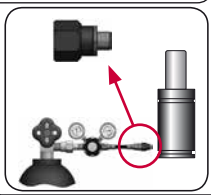

| CODE | | CWC 750 050 V1 | KIT XXXXXXX-S<br>KIT XXXXXXX-C | A14-045 | 18 GA 5 |
|---|---|---|---|---|---|
| ENG | ORDER | GAS SPRING | REPAIR KIT | FLANGE | CHARGING ADAPTER |
| DEU | BESTELLUNG | GASDRUCKFEDER | ERSATZTEILSATZ | FLANSCHE | LADEADAPTER |
| FRA | COMMANDE | RESSORT À GAZ | KIT DE RÉPARATION | BRIDE | RACCORD DE CHARGE |
| ITA | ORDINE | CILINDRO AD AZOTO | KIT DI MANUTENZIONE | FLANGE | ADATTATORE DI CARICO |
| ESP | PEDIDO | RESORTE DE GAS | KIT DE REPARACION | BRIDA | ADAPTADOR DE CARGA |
| POR | PEDIDO | CILINDRO DE GÁS | KIT DE MANUTENÇÃO | FLANGE | ADAPTADOR DE CARGA |

AZOL GAS

# CWC 750 V1 MOUNTS

*Compact Height*

## C05-045

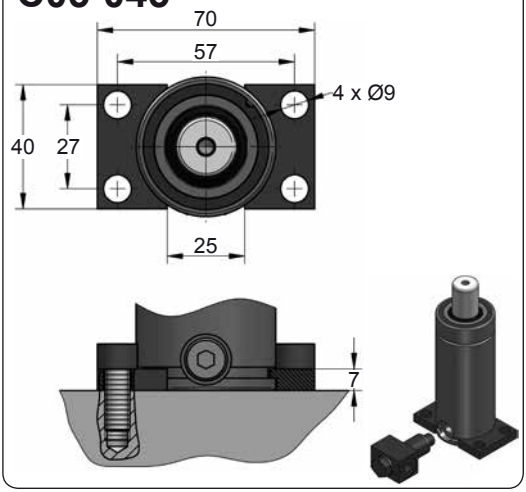


## C20-045

ISO VDI E24.54.815.G EM24.54.700/F

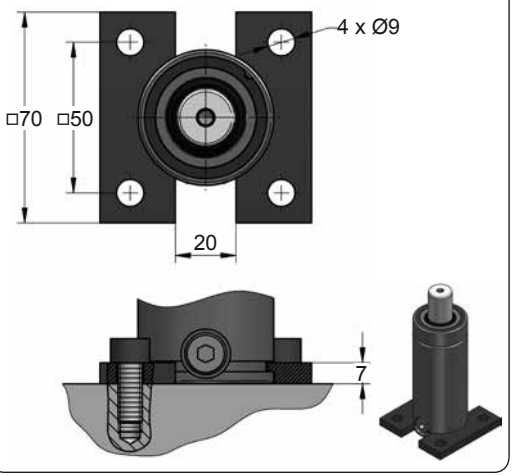


## D02-045

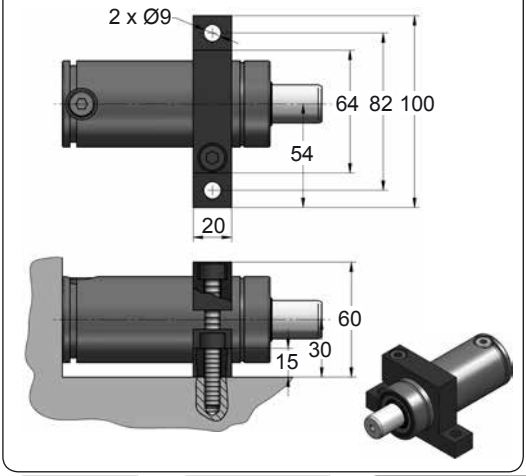


## D67-045

VDI

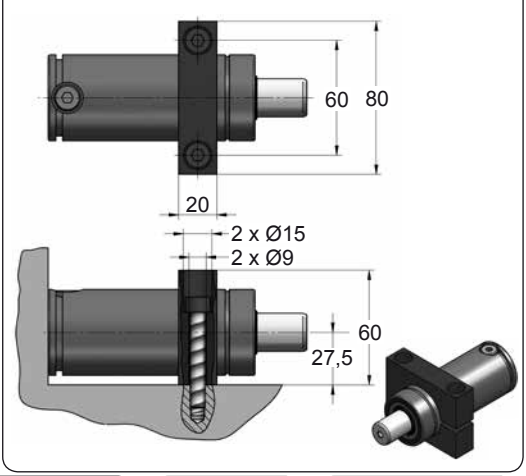









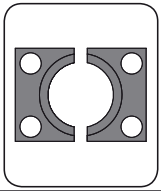

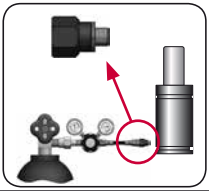

| CODE | | CWC 750 050 V1 | KIT XXXXXXX-S<br>KIT XXXXXXX-C | C05-045 | 18 GA 5 |
|---|---|---|---|---|---|
| ENG | ORDER | GAS SPRING | REPAIR KIT | FLANGE | CHARGING ADAPTER |
| DEU | BESTELLUNG | GASDRUCKFEDER | ERSATZTEILSATZ | FLANSCHE | LADEADAPTER |
| FRA | COMMANDE | RESSORT À GAZ | KIT DE RÉPARATION | BRIDE | RACCORD DE CHARGE |
| ITA | ORDINE | CILINDRO AD AZOTO | KIT DI MANUTENZIONE | FLANGE | ADATTATORE DI CARICO |
| ESP | PEDIDO | RESORTE DE GAS | KIT DE REPARACION | BRIDA | ADAPTADOR DE CARGA |
| POR | PEDIDO | CILINDRO DE GÁS | KIT DE MANUTENÇÃO | FLANGE | ADAPTADOR DE CARGA |

# CW 1000 V1

*Compact Height*

| | | | | | |
|---|---|---|---|---|---|
| **BMW** | B2 4005 | **FORD** | W-DX35-6204 | **PSA** | E24.54.815.G |
| **MB** | B8 3180 220 000 004 | | | | |
| **VW** | 39D 997 | | | | |

AZOL GAS

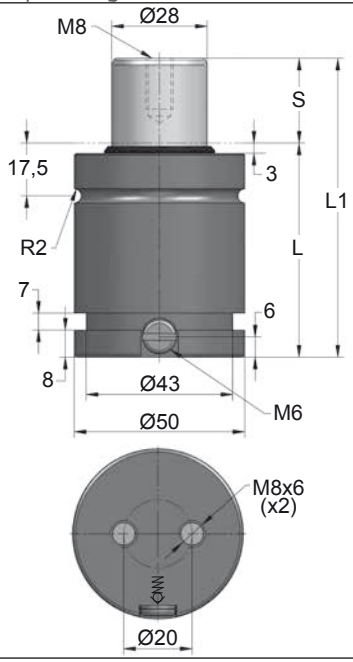


| ORDER | S (mm) | L1 ±0,25 (mm) | L (mm) | Kg. |
|---|---|---|---|---|
| CW 1000 013 V1 | 13 | 64 | 51 | 0.60 |
| CW 1000 016 V1 | 16 | 70 | 54 | 0.63 |
| CW 1000 019 V1 | 19 | 76 | 57 | 0.65 |
| CW 1000 025 V1 | 25 | 88 | 63 | 0.72 |
| CW 1000 032 V1 | 32 | 102 | 70 | 0.79 |
| CW 1000 038 V1 | 38 | 114 | 76 | 0.83 |
| CW 1000 050 V1 | 50 | 138 | 88 | 0.95 |
| CW 1000 063 V1 | 63 | 164 | 101 | 1.07 |
| CW 1000 075 V1 | 75 | 188 | 113 | 1.18 |
| CW 1000 080 V1 | 80 | 198 | 118 | 1.24 |
| CW 1000 100 V1 | 100 | 238 | 138 | 1.42 |
| CW 1000 125 V1 | 125 | 288 | 163 | 1.69 |

PED APPROVED 97/23/CE

VDI

CNOMO

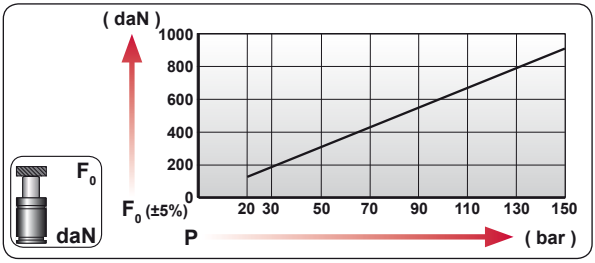


| CODE | bar | psi | $F_0$ daN | $F_1$ daN |
|---|---|---|---|---|
| CW 1000 050 V1 | 150 | 2175 | 920 | 1600 |
| CW-H 1000 050 V1 | 0 | 0 | --- | --- |

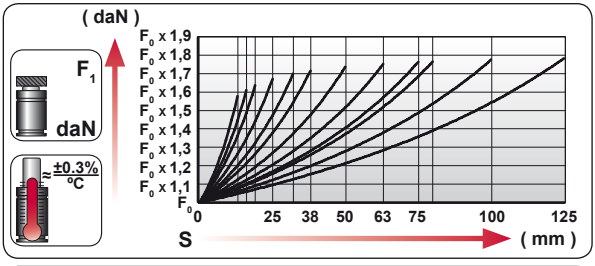


| | |
|---|---|
| ENG | ORDER |
| DEU | BESTELLUNG |
| FRA | COMMANDE |
| ITA | ORDINE |
| ESP | PEDIDO |
| POR | PEDIDO |

$F_0$ daN — S mm

CW 1000 50

CW 1000 050 V1

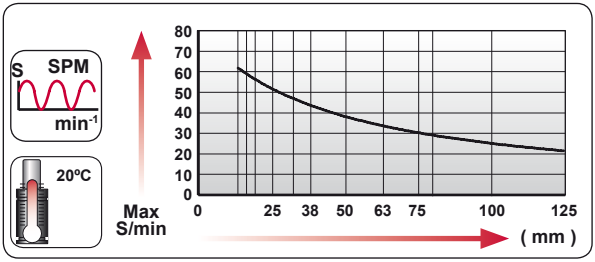


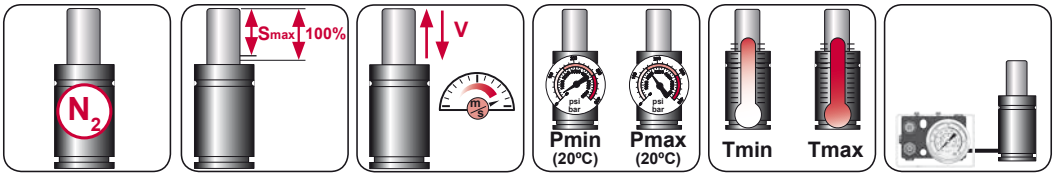


| $N_2$ | Smax < 90% | Vmax 1,6 m/s | bar psi 20 290 | bar psi 150 2175 | °C °F 0 32 | °C °F 80 176 | 600 CP- |
|---|---|---|---|---|---|---|---|

AZOL GAS

# CW 1000 V1

*Compact Height*

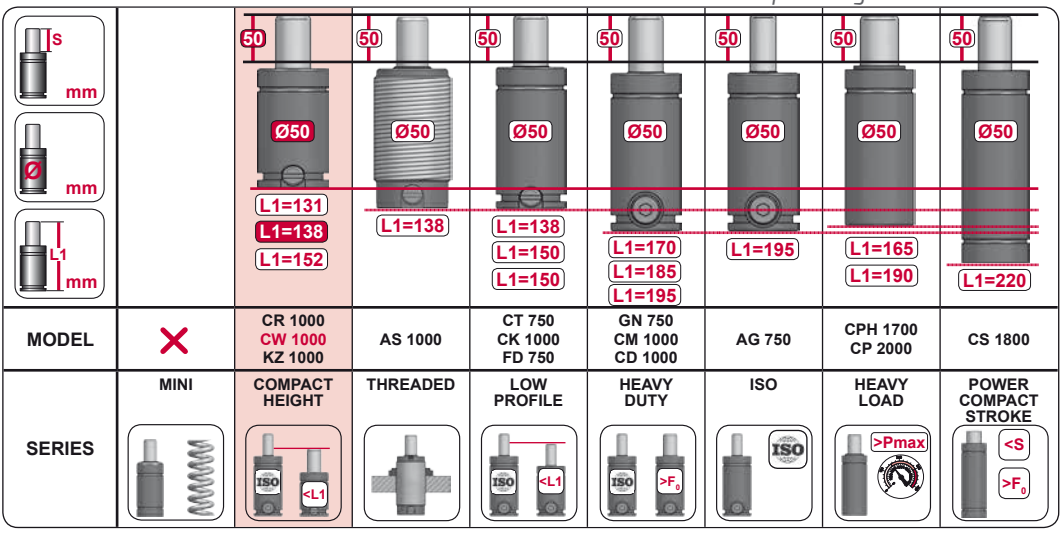


| MODEL | | CR 1000 CW 1000 KZ 1000 | AS 1000 | CT 750 CK 1000 FD 750 | GN 750 CM 1000 CD 1000 | AG 750 | CPH 1700 CP 2000 | CS 1800 |
|---|---|---|---|---|---|---|---|---|
| SERIES | MINI | COMPACT HEIGHT | THREADED | LOW PROFILE | HEAVY DUTY | ISO | HEAVY LOAD | POWER COMPACT STROKE |























## CW



CW



KRM6



BK

## CWC



CWC



DRM8



TNRR



9RM8



MCRR



7RM8



TFRR



SKK



SGS








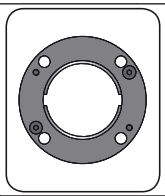

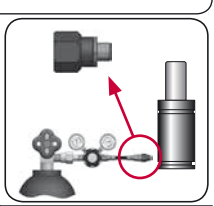

| CODE | | CW 1000 050 V1 | KIT XXXXXXX-S KIT XXXXXXX-C | A14-050 | 06 GA 11 |
|---|---|---|---|---|---|
| ENG | ORDER | GAS SPRING | REPAIR KIT | FLANGE | CHARGING ADAPTER |
| DEU | BESTELLUNG | GASDRUCKFEDER | ERSATZTEILSATZ | FLANSCHE | LADEADAPTER |
| FRA | COMMANDE | RESSORT À GAZ | KIT DE RÉPARATION | BRIDE | RACCORD DE CHARGE |
| ITA | ORDINE | CILINDRO AD AZOTO | KIT DI MANUTENZIONE | FLANGE | ADATTATORE DI CARICO |
| ESP | PEDIDO | RESORTE DE GAS | KIT DE REPARACION | BRIDA | ADAPTADOR DE CARGA |
| POR | PEDIDO | CILINDRO DE GÁS | KIT DE MANUTENÇÃO | FLANGE | ADAPTADOR DE CARGA |

# CWC 1000 V1

*Compact Height*

AZOL GAS

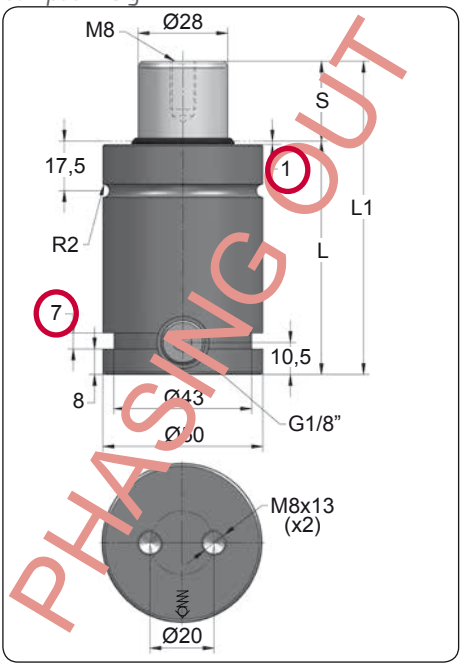


| ORDER | S (mm) | L1 ±0,25 (mm) | L (mm) | Kg. |
|---|---|---|---|---|
| CWC 1000 013 V1 | 13 | 74 | 61 | 0.63 |
| CWC 1000 016 V1 | 16 | 80 | 64 | 0.66 |
| CWC 1000 019 V1 | 19 | 86 | 67 | 0.68 |
| CWC 1000 025 V1 | 25 | 98 | 73 | 0.75 |
| CWC 1000 032 V1 | 32 | 112 | 80 | 0.83 |
| CWC 1000 038 V1 | 38 | 124 | 86 | 0.87 |
| CWC 1000 050 V1 | 50 | 148 | 98 | 1.00 |
| CWC 1000 063 V1 | 63 | 174 | 111 | 1.13 |
| CWC 1000 075 V1 | 75 | 198 | 123 | 1.24 |
| CWC 1000 080 V1 | 80 | 208 | 128 | 1.31 |
| CWC 1000 100 V1 | 100 | 248 | 148 | 1.49 |
| CWC 1000 125 V1 | 125 | 298 | 173 | 1.77 |

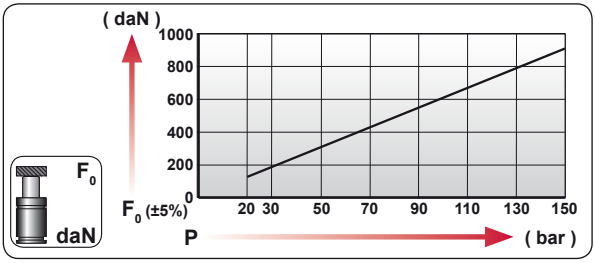


| CODE | bar | psi | F0 daN | F1 daN |
|---|---|---|---|---|
| CWC 1000 050 V1 | 150 | 2175 | 920 | 1600 |
| CWC-H 1000 050 V1 | 0 | 0 | --- | --- |

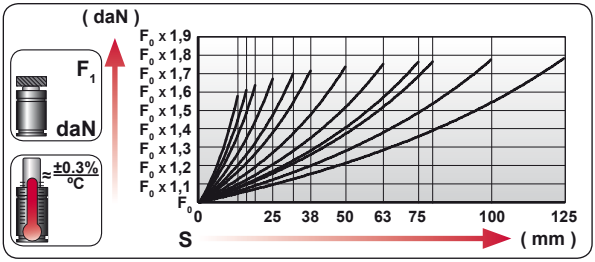


| | |
|---|---|
| ENG | ORDER |
| DEU | BESTELLUNG |
| FRA | COMMANDE |
| ITA | ORDINE |
| ESP | PEDIDO |
| POR | PEDIDO |




CWC 1000 50

CWC 1000 050 V1

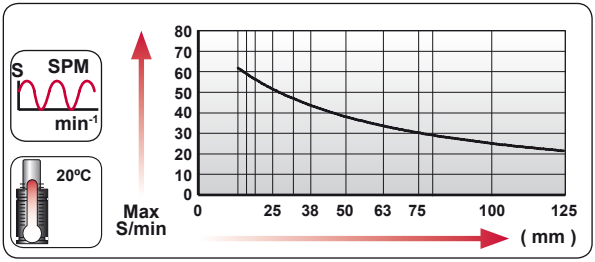


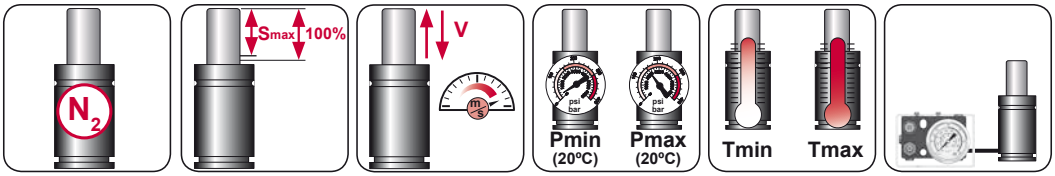


| $N_2$ | Smax < 90% | Vmax 1,6 m/s | bar psi 20 290 | bar psi 150 2175 | °C °F 0 32 | °C °F 80 176 | 600 CP- |
|---|---|---|---|---|---|---|---|

AZOL GAS

# CWC 1000 V1

*Compact Height*




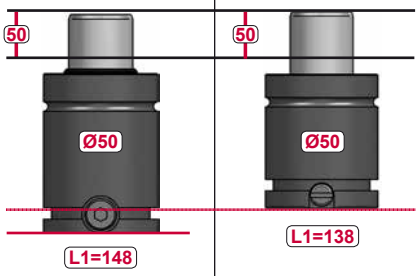


| MODEL | CWC 1000 | CW 1000 |
|---|---|---|

## CW

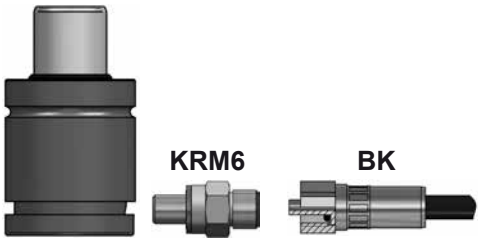


## CWC

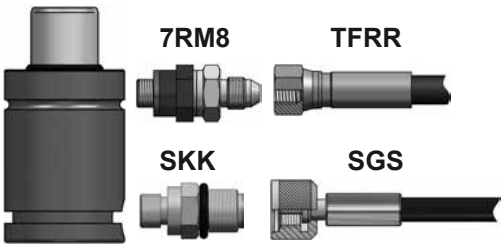









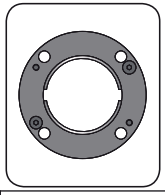

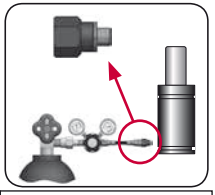

| CODE | | CWC 1000 050 V1 | KIT XXXXXXX-S<br>KIT XXXXXXX-C | A14-050 | 18 GA 5 |
|---|---|---|---|---|---|
| ENG | ORDER | GAS SPRING | REPAIR KIT | FLANGE | CHARGING ADAPTER |
| DEU | BESTELLUNG | GASDRUCKFEDER | ERSATZTEILSATZ | FLANSCHE | LADEADAPTER |
| FRA | COMMANDE | RESSORT À GAZ | KIT DE RÉPARATION | BRIDE | RACCORD DE CHARGE |
| ITA | ORDINE | CILINDRO AD AZOTO | KIT DI MANUTENZIONE | FLANGE | ADATTATORE DI CARICO |
| ESP | PEDIDO | RESORTE DE GAS | KIT DE REPARACION | BRIDA | ADAPTADOR DE CARGA |
| POR | PEDIDO | CILINDRO DE GÁS | KIT DE MANUTENÇÃO | FLANGE | ADAPTADOR DE CARGA |

# CWC 1000 V2

*Compact Height*

AZOL GAS

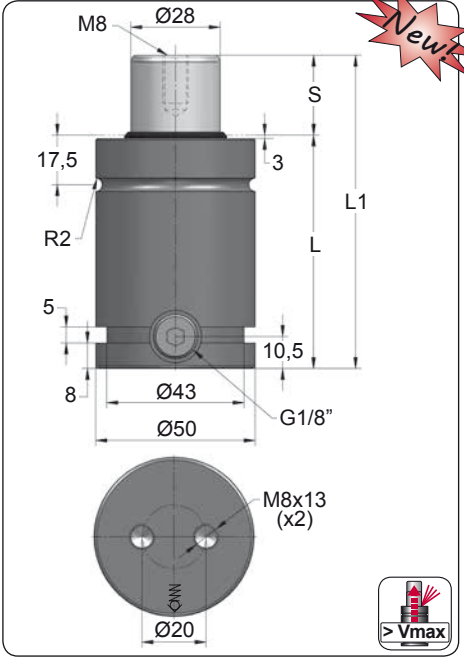


Newt

| ORDER | S (mm) | L1 ±0,25 (mm) | L (mm) | Kg. |
|---|---|---|---|---|
| CWC 1000 013 V2 | 13 | 74 | 61 | 0.63 |
| CWC 1000 016 V2 | 16 | 80 | 64 | 0.66 |
| CWC 1000 019 V2 | 19 | 86 | 67 | 0.68 |
| CWC 1000 025 V2 | 25 | 98 | 73 | 0.75 |
| CWC 1000 032 V2 | 32 | 112 | 80 | 0.83 |
| CWC 1000 038 V2 | 38 | 124 | 86 | 0.87 |
| CWC 1000 050 V2 | 50 | 148 | 98 | 1.00 |
| CWC 1000 063 V2 | 63 | 174 | 111 | 1.13 |
| CWC 1000 075 V2 | 75 | 198 | 123 | 1.24 |
| CWC 1000 080 V2 | 80 | 208 | 128 | 1.31 |
| CWC 1000 100 V2 | 100 | 248 | 148 | 1.49 |
| CWC 1000 125 V2 | 125 | 298 | 173 | 1.77 |

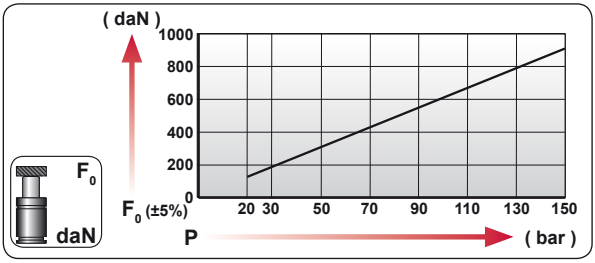


| CODE | bar | psi | $F_0$ daN | $F_1$ daN |
|---|---|---|---|---|
| CWC 1000 050 V2 | 150 | 2175 | 920 | 1600 |
| CWC-H 1000 050 V2 | 0 | 0 | --- | --- |

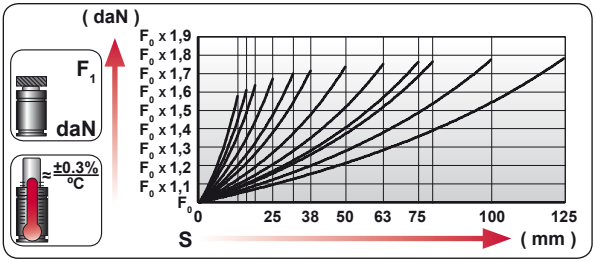


| | |
|---|---|
| ENG | ORDER |
| DEU | BESTELLUNG |
| FRA | COMMANDE |
| ITA | ORDINE |
| ESP | PEDIDO |
| POR | PEDIDO |




CWC 1000 50

CWC 1000 050 V2

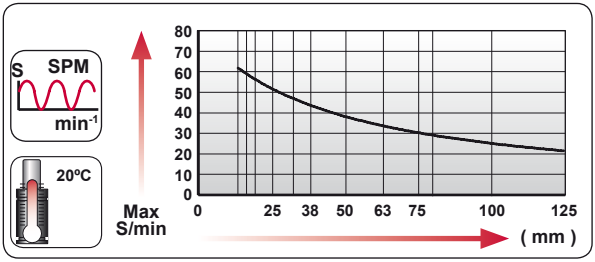


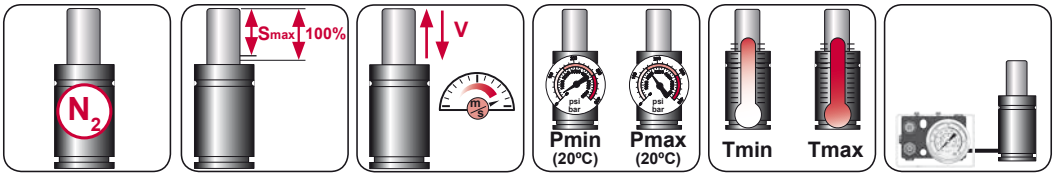


| $N_2$ | Smax < 90% | Vmax 1,6 m/s | bar psi 20 290 | bar psi 150 2175 | °C °F 0 32 | °C °F 80 176 | 600 CP- |
|---|---|---|---|---|---|---|---|

AZOL GAS

# CWC 1000 V2

*Compact Height*




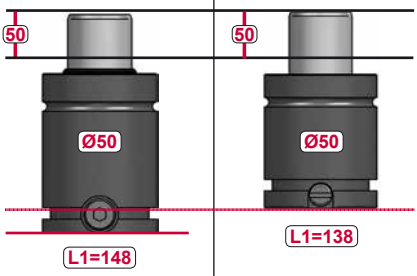


| MODEL | CWC 1000 | CW 1000 |
|---|---|---|

## CW

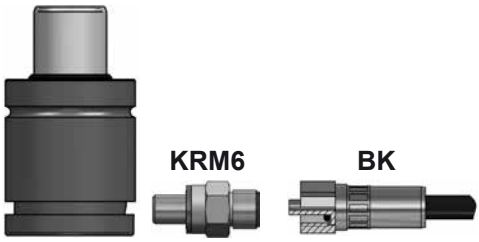


## CWC

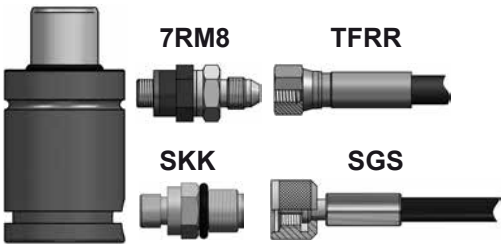









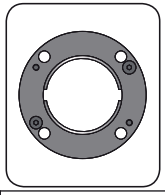

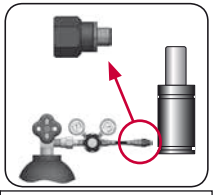

| CODE | | CWC 1000 050 V2 | KIT XXXXXXX-S<br>KIT XXXXXXX-C | A14-050 | 18 GA 5 |
|---|---|---|---|---|---|
| ENG | ORDER | GAS SPRING | REPAIR KIT | FLANGE | CHARGING ADAPTER |
| DEU | BESTELLUNG | GASDRUCKFEDER | ERSATZTEILSATZ | FLANSCHE | LADEADAPTER |
| FRA | COMMANDE | RESSORT À GAZ | KIT DE RÉPARATION | BRIDE | RACCORD DE CHARGE |
| ITA | ORDINE | CILINDRO AD AZOTO | KIT DI MANUTENZIONE | FLANGE | ADATTATORE DI CARICO |
| ESP | PEDIDO | RESORTE DE GAS | KIT DE REPARACION | BRIDA | ADAPTADOR DE CARGA |
| POR | PEDIDO | CILINDRO DE GÁS | KIT DE MANUTENÇÃO | FLANGE | ADAPTADOR DE CARGA |

# CWC 1000 MOUNTS

*Compact Height*

AZOL GAS

## A14-050

ISO E24.54.815.G EM24.54.700/F

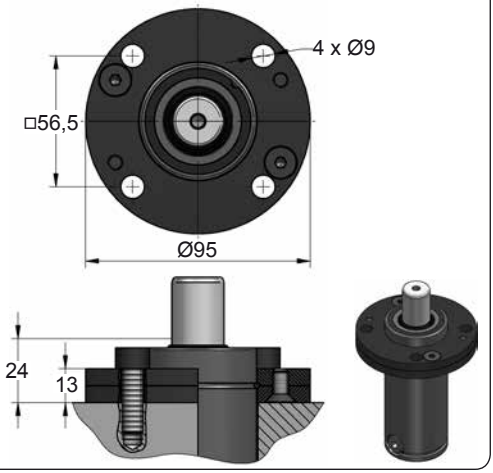


## A34-050

ISO VDI

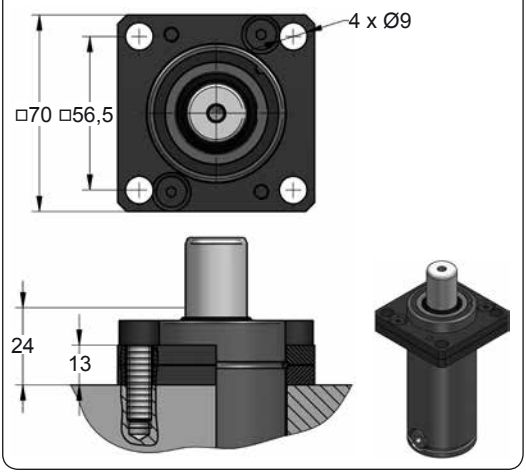


## B36-050

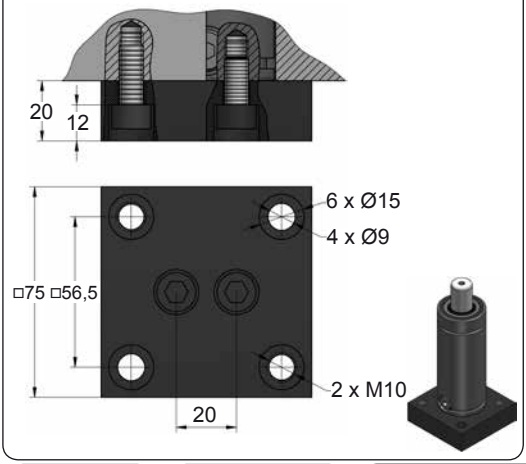


## B41-050

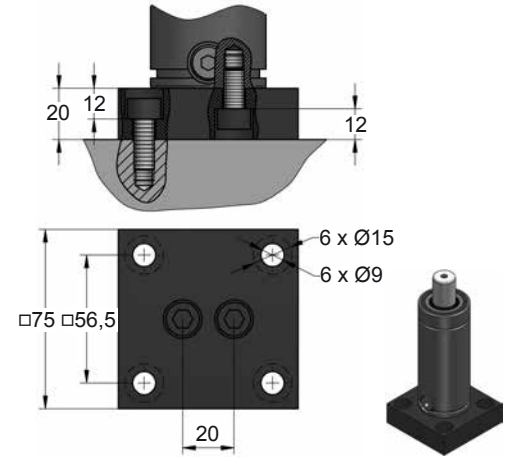









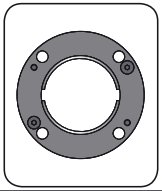

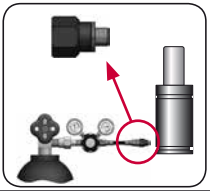

| CODE | | CWC 1000 050 | KIT XXXXXXX-S<br>KIT XXXXXXX-C | A14-050 | 18 GA 5 |
|---|---|---|---|---|---|
| ENG | ORDER | GAS SPRING | REPAIR KIT | FLANGE | CHARGING ADAPTER |
| DEU | BESTELLUNG | GASDRUCKFEDER | ERSATZTEILSATZ | FLANSCHE | LADEADAPTER |
| FRA | COMMANDE | RESSORT À GAZ | KIT DE RÉPARATION | BRIDE | RACCORD DE CHARGE |
| ITA | ORDINE | CILINDRO AD AZOTO | KIT DI MANUTENZIONE | FLANGE | ADATTATORE DI CARICO |
| ESP | PEDIDO | RESORTE DE GAS | KIT DE REPARACION | BRIDA | ADAPTADOR DE CARGA |
| POR | PEDIDO | CILINDRO DE GÁS | KIT DE MANUTENÇÃO | FLANGE | ADAPTADOR DE CARGA |

AZOL GAS

# CWC 1000 MOUNTS

*Compact Height*

## C05-050

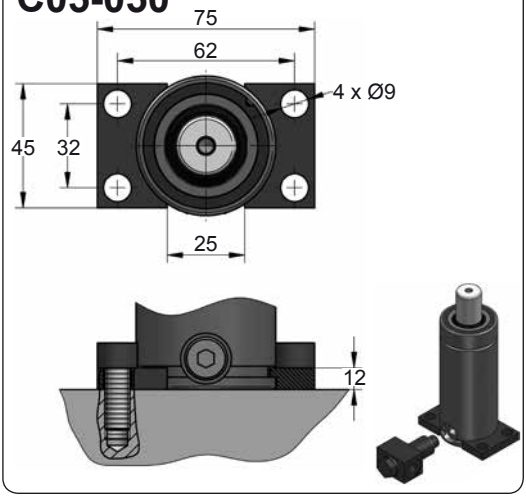


## C20-050

ISO · VDI · E24.54.815.G EM24.54.700/F

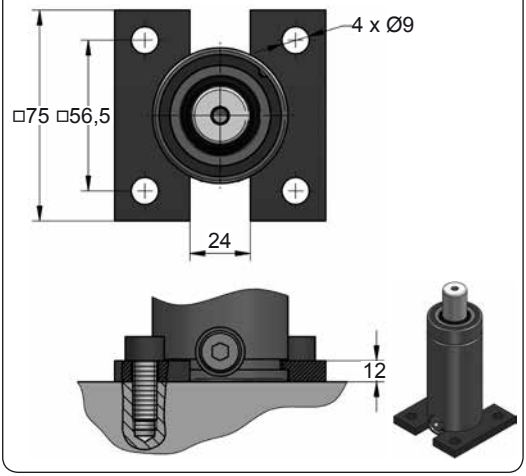


## D02-050

ISO · E24.54.815.G EM24.54.700/F

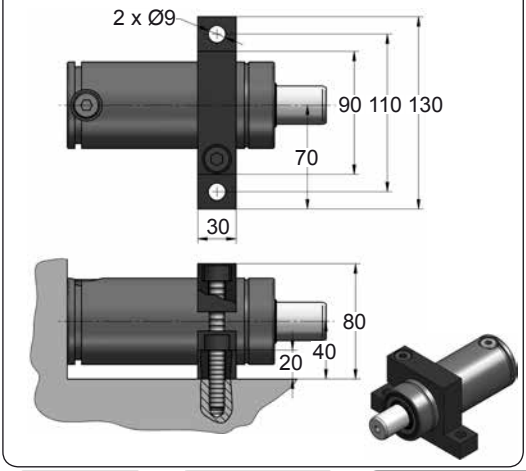


## D67-050

VDI

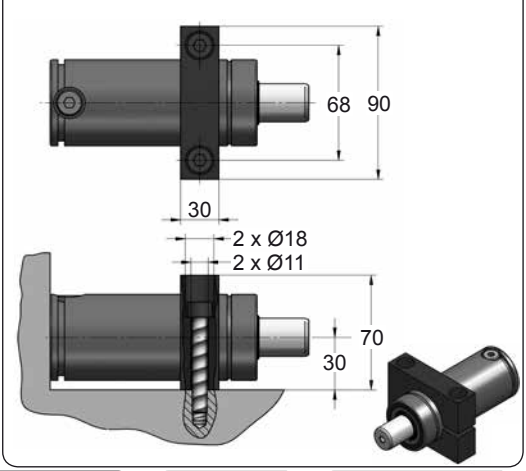









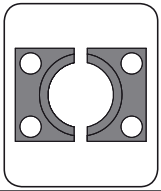

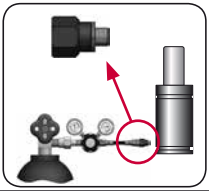

| CODE | | CWC 1000 050 | KIT XXXXXXX-S<br>KIT XXXXXXX-C | C05-050 | 18 GA 5 |
|---|---|---|---|---|---|
| ENG | ORDER | GAS SPRING | REPAIR KIT | FLANGE | CHARGING ADAPTER |
| DEU | BESTELLUNG | GASDRUCKFEDER | ERSATZTEILSATZ | FLANSCHE | LADEADAPTER |
| FRA | COMMANDE | RESSORT À GAZ | KIT DE RÉPARATION | BRIDE | RACCORD DE CHARGE |
| ITA | ORDINE | CILINDRO AD AZOTO | KIT DI MANUTENZIONE | FLANGE | ADATTATORE DI CARICO |
| ESP | PEDIDO | RESORTE DE GAS | KIT DE REPARACION | BRIDA | ADAPTADOR DE CARGA |
| POR | PEDIDO | CILINDRO DE GÁS | KIT DE MANUTENÇÃO | FLANGE | ADAPTADOR DE CARGA |

# CW 1500

*Compact Height*

| | | | |
|---|---|---|---|
| **BMW** | B2 4005 | **FORD** | W-DX35-6204 |
| **MB** | B8 3180 220 000 004 | | |
| **VW** | 39D 997 | | |

AZOL GAS

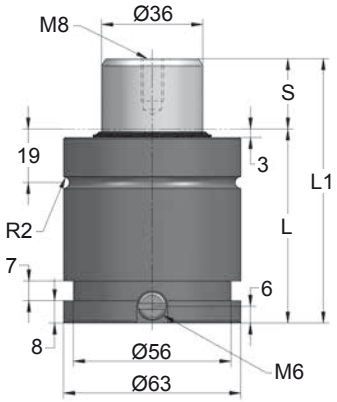


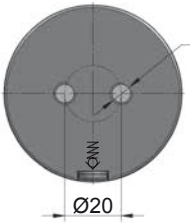


> Vmax

| ORDER | S (mm) | L1 ±0,25 (mm) | L (mm) | Kg. |
|---|---|---|---|---|
| CW 1500 013 | 13 | 70 | 57 | 1.00 |
| CW 1500 016 | 16 | 76 | 60 | 1.06 |
| CW 1500 019 | 19 | 82 | 63 | 1.10 |
| CW 1500 025 | 25 | 94 | 69 | 1.20 |
| CW 1500 032 | 32 | 108 | 76 | 1.29 |
| CW 1500 038 | 38 | 120 | 82 | 1.38 |
| CW 1500 050 | 50 | 144 | 94 | 1.56 |
| CW 1500 063 | 63 | 170 | 107 | 1.72 |
| CW 1500 075 | 75 | 194 | 119 | 1.90 |
| CW 1500 080 | 80 | 204 | 124 | 1.98 |
| CW 1500 100 | 100 | 244 | 144 | 2.30 |
| CW 1500 125 | 125 | 294 | 169 | 2.65 |

PED 2014/68/UE

VDI

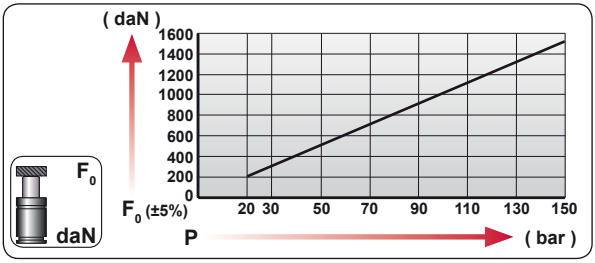


| CODE | | bar | psi | $F_0$ daN | $F_1$ daN |
|---|---|---|---|---|---|
| CW 1500 050 | | 150 | 2175 | 1530 | 2640 |
| CW-H 1500 050 | | 0 | 0 | --- | --- |

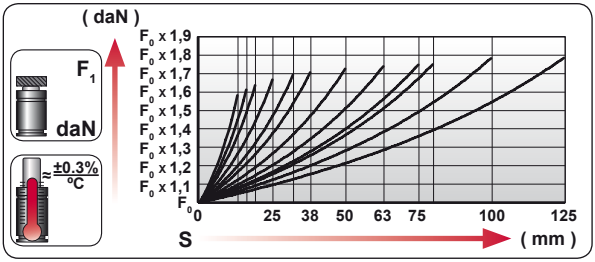


| | |
|---|---|
| ENG | ORDER |
| DEU | BESTELLUNG |
| FRA | COMMANDE |
| ITA | ORDINE |
| ESP | PEDIDO |
| POR | PEDIDO |

$F_0$ daN — S mm

CW 1500 50

CW 1500 050

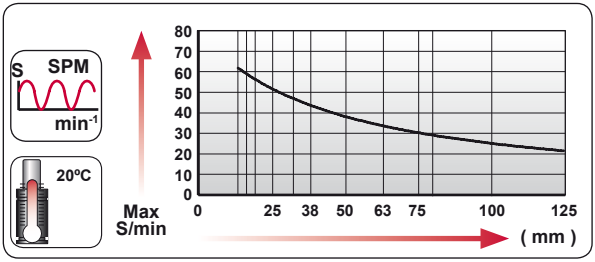


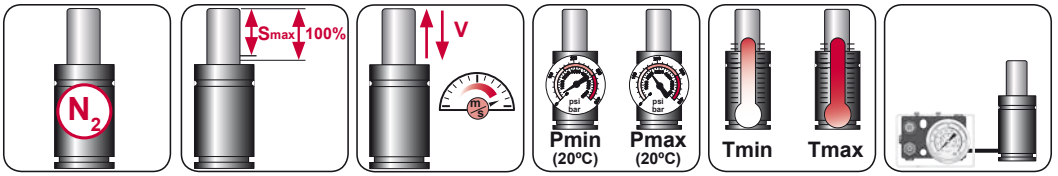


| $N_2$ | Smax < 90% | Vmax 1,6 m/s | bar psi 20 290 | bar psi 150 2175 | °C °F 0 32 | °C °F 80 176 | 600 CP- |
|---|---|---|---|---|---|---|---|

AZOL GAS

# CW 1500

*Compact Height*

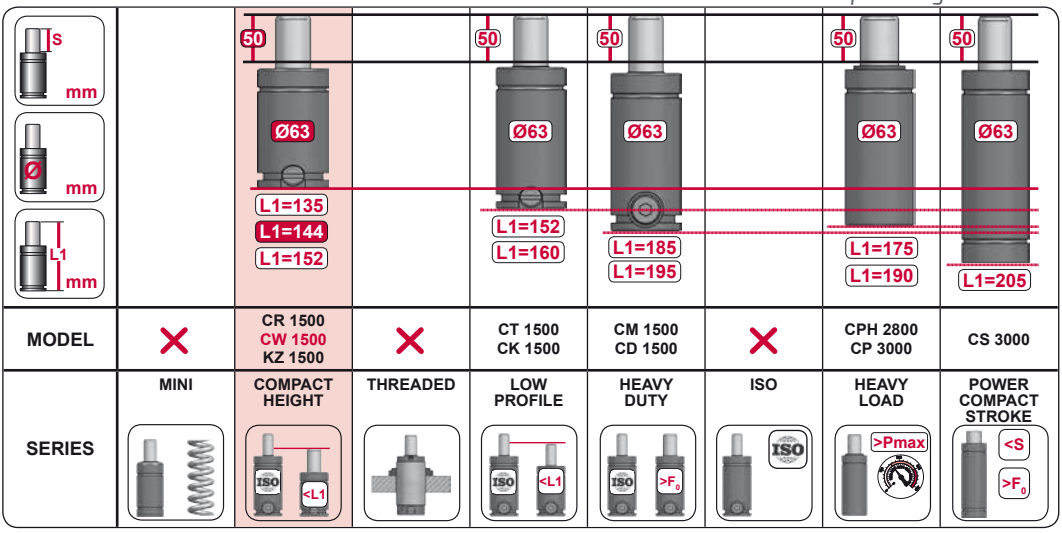


| MODEL | | CR 1500 CW 1500 KZ 1500 | | CT 1500 CK 1500 | CM 1500 CD 1500 | | CPH 2800 CP 3000 | CS 3000 |
|---|---|---|---|---|---|---|---|---|
| SERIES | MINI | COMPACT HEIGHT | THREADED | LOW PROFILE | HEAVY DUTY | ISO | HEAVY LOAD | POWER COMPACT STROKE |

## CW

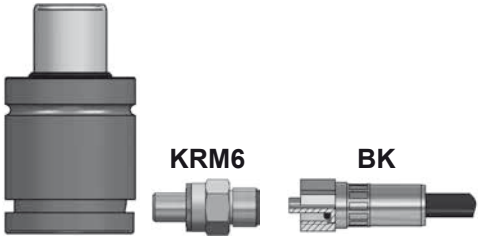


## CWC

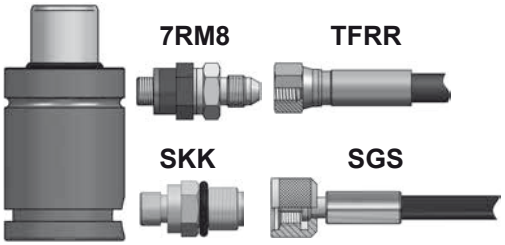





| CODE | | CW 1500 050 | KIT XXXXXXX-S KIT XXXXXXX-C | A14-063 | 06 GA 11 |
|---|---|---|---|---|---|
| ENG | ORDER | GAS SPRING | REPAIR KIT | FLANGE | CHARGING ADAPTER |
| DEU | BESTELLUNG | GASDRUCKFEDER | ERSATZTEILSATZ | FLANSCHE | LADEADAPTER |
| FRA | COMMANDE | RESSORT À GAZ | KIT DE RÉPARATION | BRIDE | RACCORD DE CHARGE |
| ITA | ORDINE | CILINDRO AD AZOTO | KIT DI MANUTENZIONE | FLANGE | ADATTATORE DI CARICO |
| ESP | PEDIDO | RESORTE DE GAS | KIT DE REPARACION | BRIDA | ADAPTADOR DE CARGA |
| POR | PEDIDO | CILINDRO DE GÁS | KIT DE MANUTENÇÃO | FLANGE | ADAPTADOR DE CARGA |

# CWC 1500

*Compact Height*

AZOL GAS

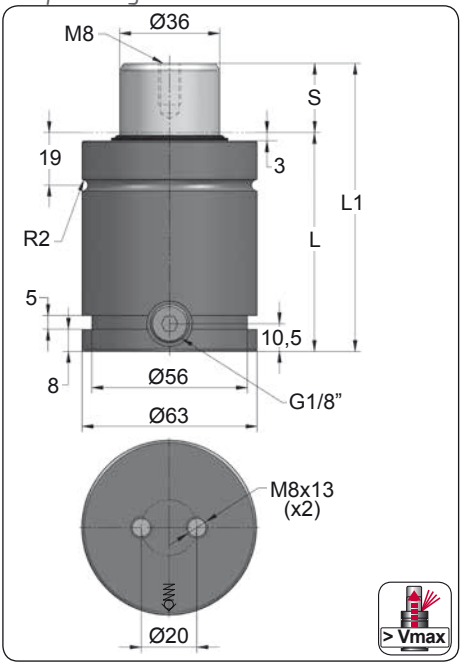


| ORDER | S (mm) | L1 ±0,25 (mm) | L (mm) | Kg. |
|---|---|---|---|---|
| CWC 1500 013 | 13 | 80 | 67 | 1.05 |
| CWC 1500 016 | 16 | 86 | 70 | 1.12 |
| CWC 1500 019 | 19 | 92 | 73 | 1.16 |
| CWC 1500 025 | 25 | 104 | 79 | 1.26 |
| CWC 1500 032 | 32 | 118 | 86 | 1.35 |
| CWC 1500 038 | 38 | 130 | 92 | 1.45 |
| CWC 1500 050 | 50 | 154 | 104 | 1.64 |
| CWC 1500 063 | 63 | 180 | 117 | 1.81 |
| CWC 1500 075 | 75 | 204 | 129 | 2.00 |
| CWC 1500 080 | 80 | 214 | 134 | 2.08 |
| CWC 1500 100 | 100 | 254 | 154 | 2.42 |
| CWC 1500 125 | 125 | 304 | 179 | 2.79 |

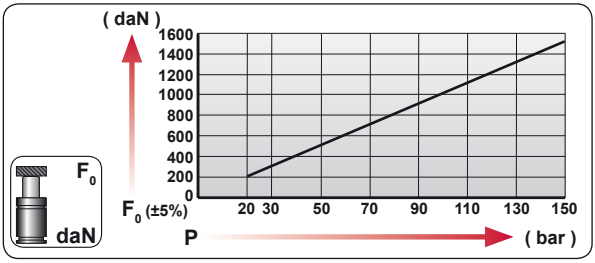


| CODE | bar | psi | $F_0$ daN | $F_1$ daN |
|---|---|---|---|---|
| CWC 1500 050 | 150 | 2175 | 1530 | 2640 |
| CWC-H 1500 050 | 0 | 0 | --- | --- |

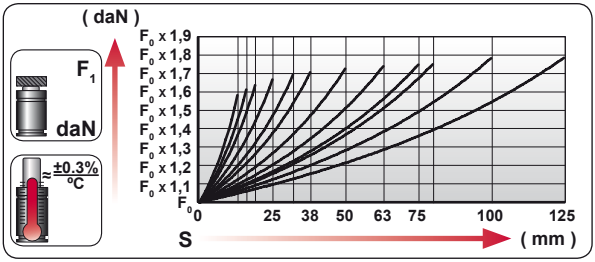


| | |
|---|---|
| ENG | ORDER |
| DEU | BESTELLUNG |
| FRA | COMMANDE |
| ITA | ORDINE |
| ESP | PEDIDO |
| POR | PEDIDO |




CWC 1500 50

CWC 1500 050

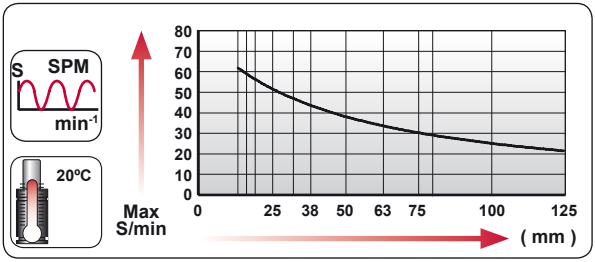


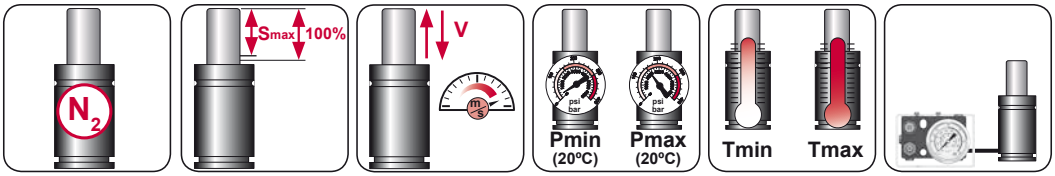


| $N_2$ | Smax < 90% | Vmax 1,6 m/s | bar psi 20 290 | bar psi 150 2175 | °C °F 0 32 | °C °F 80 176 | 600 CP- |
|---|---|---|---|---|---|---|---|

AZOL GAS

# CWC 1500

*Compact Height*




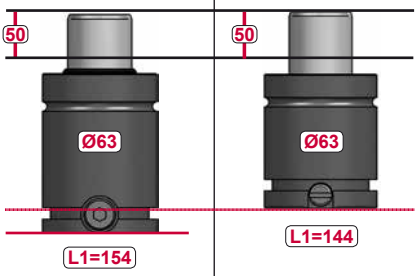


| MODEL | CWC 1500 | CW 1500 |
|---|---|---|

## CW

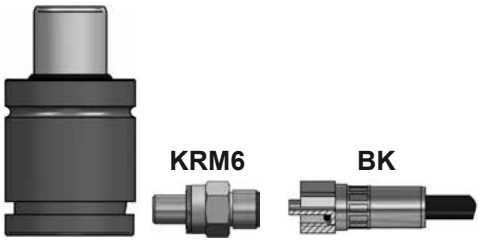


## CWC

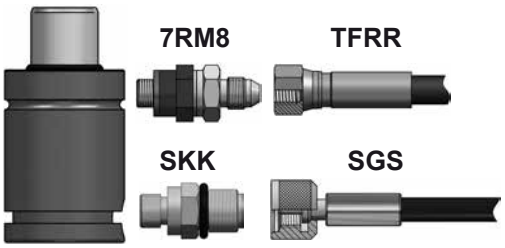









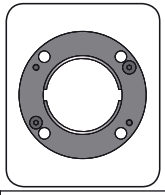

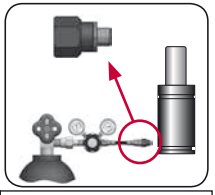

| CODE | | CWC 1500 050 | KIT XXXXXXX-S<br>KIT XXXXXXX-C | A14-063 | 18 GA 5 |
|---|---|---|---|---|---|
| ENG | ORDER | GAS SPRING | REPAIR KIT | FLANGE | CHARGING ADAPTER |
| DEU | BESTELLUNG | GASDRUCKFEDER | ERSATZTEILSATZ | FLANSCHE | LADEADAPTER |
| FRA | COMMANDE | RESSORT À GAZ | KIT DE RÉPARATION | BRIDE | RACCORD DE CHARGE |
| ITA | ORDINE | CILINDRO AD AZOTO | KIT DI MANUTENZIONE | FLANGE | ADATTATORE DI CARICO |
| ESP | PEDIDO | RESORTE DE GAS | KIT DE REPARACION | BRIDA | ADAPTADOR DE CARGA |
| POR | PEDIDO | CILINDRO DE GÁS | KIT DE MANUTENÇÃO | FLANGE | ADAPTADOR DE CARGA |

# CWC 1500 MOUNTS

*Compact Height*

AZOL GAS

## A14-063

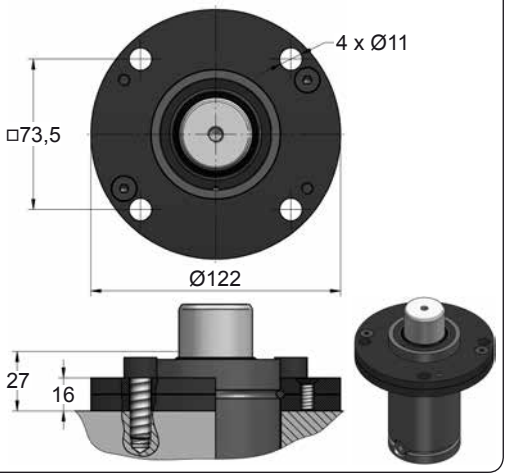


## A39-063

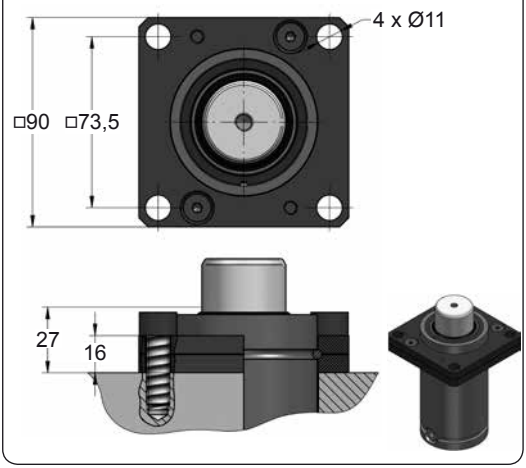


## B36-063

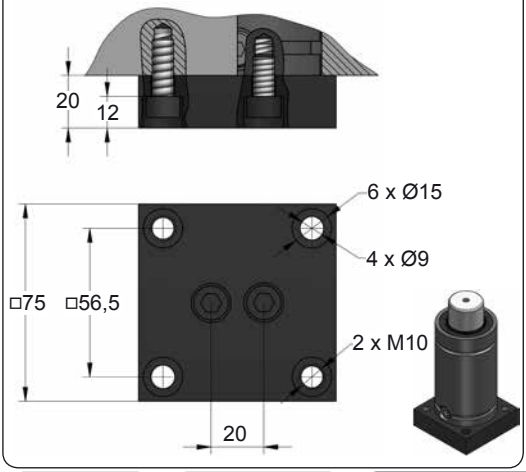


## B41-063

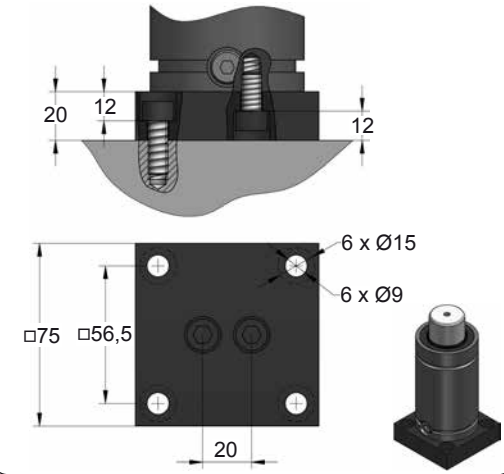





| CODE | | CWC 1500 050 | KIT XXXXXXX-S<br>KIT XXXXXXX-C | A14-063 | 18 GA 5 |
|---|---|---|---|---|---|
| ENG | ORDER | GAS SPRING | REPAIR KIT | FLANGE | CHARGING ADAPTER |
| DEU | BESTELLUNG | GASDRUCKFEDER | ERSATZTEILSATZ | FLANSCHE | LADEADAPTER |
| FRA | COMMANDE | RESSORT À GAZ | KIT DE RÉPARATION | BRIDE | RACCORD DE CHARGE |
| ITA | ORDINE | CILINDRO AD AZOTO | KIT DI MANUTENZIONE | FLANGE | ADATTATORE DI CARICO |
| ESP | PEDIDO | RESORTE DE GAS | KIT DE REPARACION | BRIDA | ADAPTADOR DE CARGA |
| POR | PEDIDO | CILINDRO DE GÁS | KIT DE MANUTENÇÃO | FLANGE | ADAPTADOR DE CARGA |

AZOL GAS

# CWC 1500 MOUNTS

*Compact Height*

## C05-063

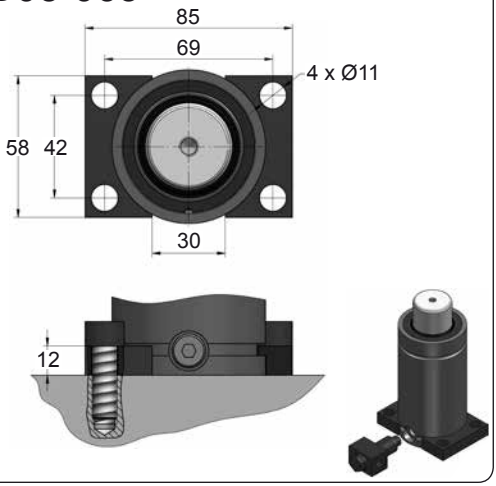


## C35-063

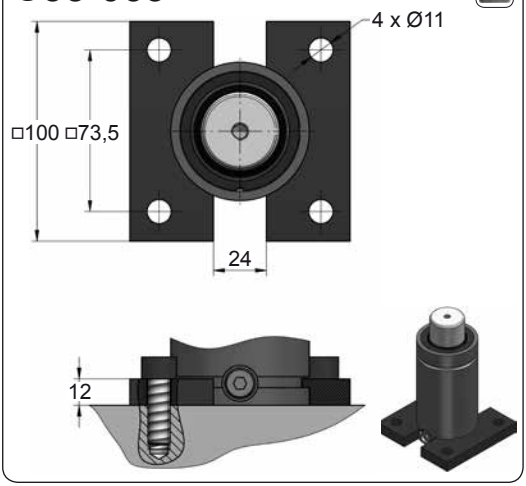


## D02-063

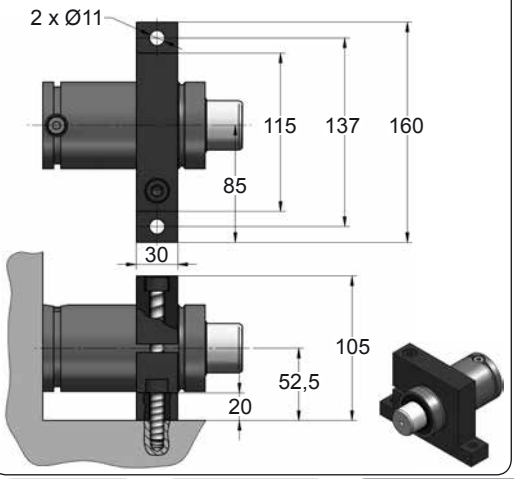


## D67-063

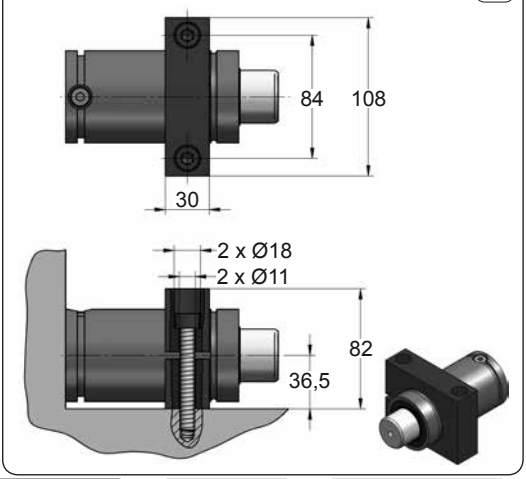









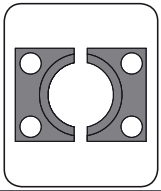

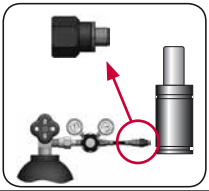

| CODE | | CWC 1500 050 | KIT XXXXXXX-S<br>KIT XXXXXXX-C | C05-063 | 18 GA 5 |
|---|---|---|---|---|---|
| ENG | ORDER | GAS SPRING | REPAIR KIT | FLANGE | CHARGING ADAPTER |
| DEU | BESTELLUNG | GASDRUCKFEDER | ERSATZTEILSATZ | FLANSCHE | LADEADAPTER |
| FRA | COMMANDE | RESSORT À GAZ | KIT DE RÉPARATION | BRIDE | RACCORD DE CHARGE |
| ITA | ORDINE | CILINDRO AD AZOTO | KIT DI MANUTENZIONE | FLANGE | ADATTATORE DI CARICO |
| ESP | PEDIDO | RESORTE DE GAS | KIT DE REPARACION | BRIDA | ADAPTADOR DE CARGA |
| POR | PEDIDO | CILINDRO DE GÁS | KIT DE MANUTENÇÃO | FLANGE | ADAPTADOR DE CARGA |

# CW 2400

*Compact Height*

AZOL GAS

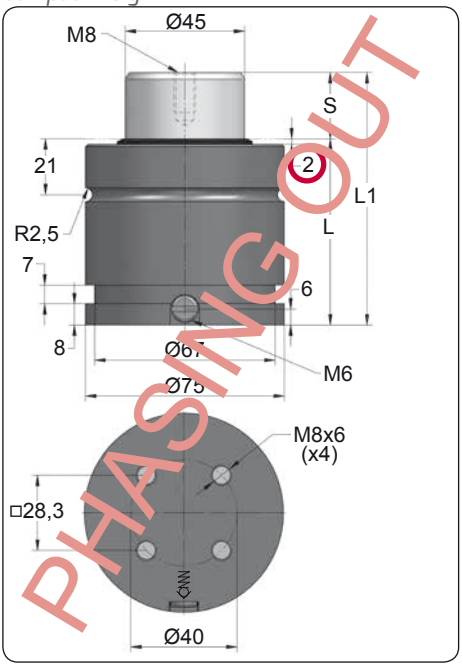


| ORDER | S (mm) | L1 ±0,25 (mm) | L (mm) | Kg. |
|---|---|---|---|---|
| CW 2400 005 | 5 | 55 | 50 | 1.30 |
| CW 2400 010 | 10 | 65 | 55 | 1.42 |
| CW 2400 016 | 16 | 77 | 61 | 1.55 |
| CW 2400 019 | 19 | 83 | 64 | 1.61 |
| CW 2400 025 | 25 | 95 | 70 | 1.75 |
| CW 2400 032 | 32 | 109 | 77 | 1.88 |
| CW 2400 038 | 38 | 121 | 83 | 2.03 |
| CW 2400 050 | 50 | 145 | 95 | 2.28 |
| CW 2400 063 | 63 | 171 | 108 | 2.57 |
| CW 2400 075 | 75 | 195 | 120 | 2.86 |
| CW 2400 080 | 80 | 205 | 125 | 3.13 |
| CW 2400 100 | 100 | 245 | 145 | 3.43 |
| CW 2400 125 | 125 | 295 | 170 | 4.40 |

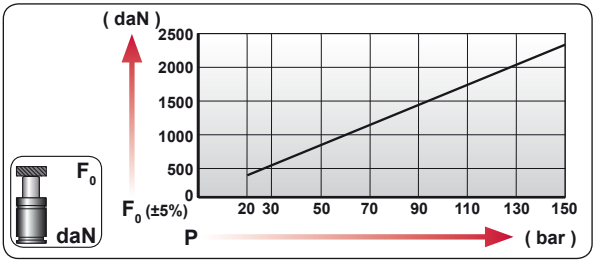


| CODE | bar | psi | F0 daN | F1 daN |
|---|---|---|---|---|
| CW 2400 050 | 150 | 2175 | 2385 | 4500 |
| CW-H 2400 050 | 0 | 0 | --- | --- |

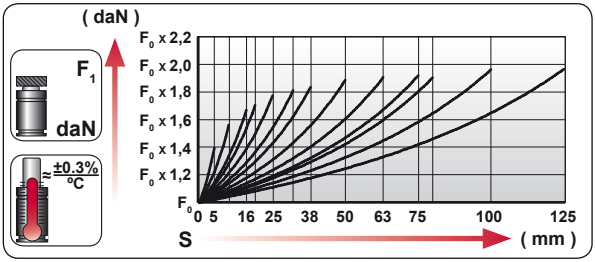


| ENG | ORDER |
|---|---|
| DEU | BESTELLUNG |
| FRA | COMMANDE |
| ITA | ORDINE |
| ESP | PEDIDO |
| POR | PEDIDO |

F0 daN — S mm

CW 2400 50

CW 2400 050

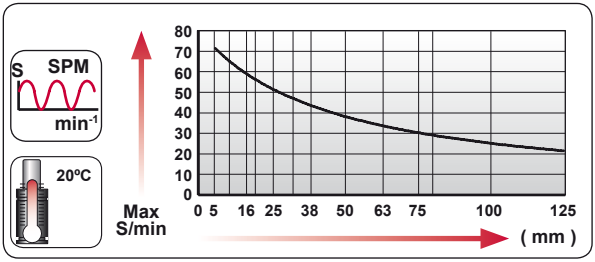


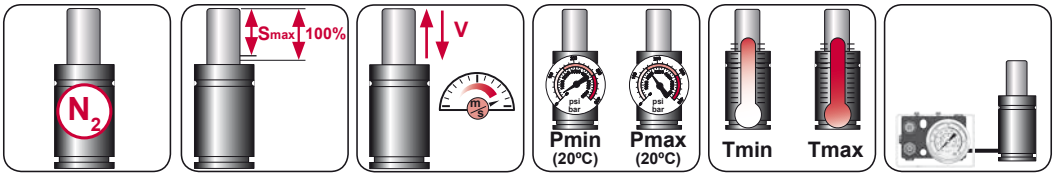


| $N_2$ | Smax < 90% | Vmax 1,6 m/s | bar psi 20 290 | bar psi 150 2175 | ºC ºF 0 32 | ºC ºF 80 176 | 600 CP- |
|---|---|---|---|---|---|---|---|

AZOL GAS

# CW 2400

*Compact Height*

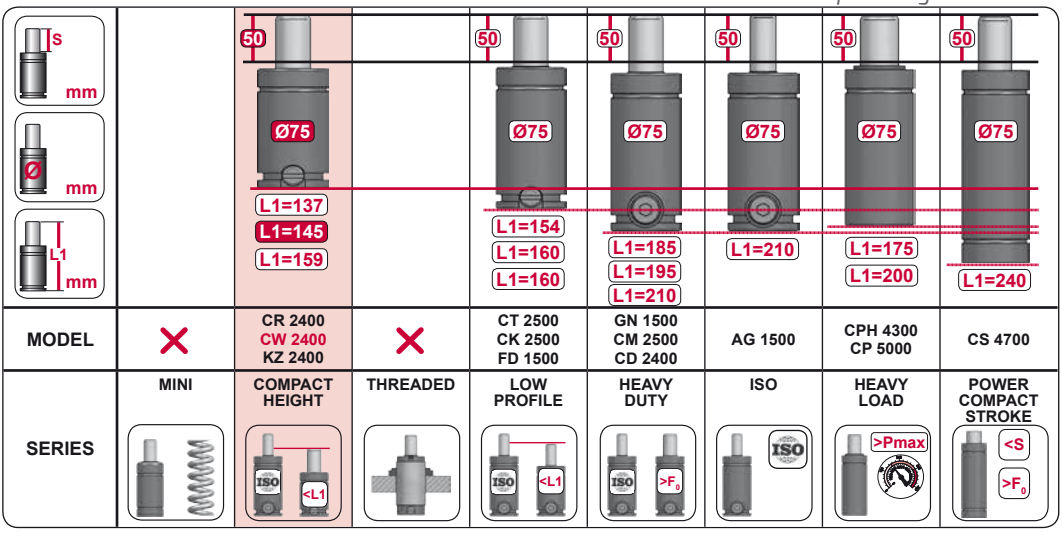


| MODEL | × | CR 2400<br>CW 2400<br>KZ 2400 | × | CT 2500<br>CK 2500<br>FD 1500 | GN 1500<br>CM 2500<br>CD 2400 | AG 1500 | CPH 4300<br>CP 5000 | CS 4700 |
|---|---|---|---|---|---|---|---|---|
| SERIES | MINI | COMPACT HEIGHT | THREADED | LOW PROFILE | HEAVY DUTY | ISO | HEAVY LOAD | POWER COMPACT STROKE |

## CW










## CWC



































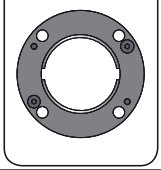

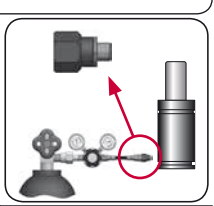

| CODE | | CW 2400 050 | KIT XXXXXXX-S<br>KIT XXXXXXX-C | A14-075 | 06 GA 11 |
|---|---|---|---|---|---|
| ENG | ORDER | GAS SPRING | REPAIR KIT | FLANGE | CHARGING ADAPTER |
| DEU | BESTELLUNG | GASDRUCKFEDER | ERSATZTEILSATZ | FLANSCHE | LADEADAPTER |
| FRA | COMMANDE | RESSORT À GAZ | KIT DE RÉPARATION | BRIDE | RACCORD DE CHARGE |
| ITA | ORDINE | CILINDRO AD AZOTO | KIT DI MANUTENZIONE | FLANGE | ADATTATORE DI CARICO |
| ESP | PEDIDO | RESORTE DE GAS | KIT DE REPARACION | BRIDA | ADAPTADOR DE CARGA |
| POR | PEDIDO | CILINDRO DE GÁS | KIT DE MANUTENÇÃO | FLANGE | ADAPTADOR DE CARGA |

# CW 2400 V1

*Compact Height*

| | | | | | |
|---|---|---|---|---|---|
| **BMW** | B2 4005 | **FORD** | W-DX35-6204 | **PSA** | E24.54.815.G |
| **MB** | B8 3180 220 000 004 | | | | |
| **VW** | 39D 997 | | | | |

AZOL GAS

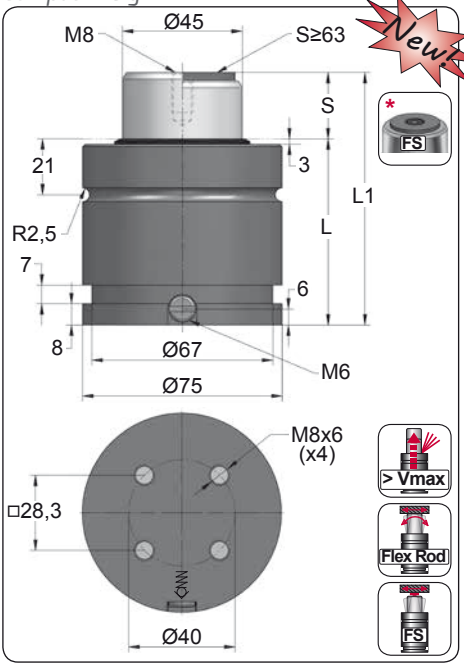


| ORDER | S (mm) | L1 ±0,25 (mm) | L (mm) | Kg. |
|---|---|---|---|---|
| CW 2400 010 V1 | 10 | 65 | 55 | 1.42 |
| CW 2400 016 V1 | 16 | 77 | 61 | 1.55 |
| CW 2400 019 V1 | 19 | 83 | 64 | 1.61 |
| CW 2400 025 V1 | 25 | 95 | 70 | 1.75 |
| CW 2400 032 V1 | 32 | 109 | 77 | 1.88 |
| CW 2400 038 V1 | 38 | 121 | 83 | 2.03 |
| CW 2400 050 V1 | 50 | 145 | 95 | 2.28 |
| CW 2400 063 V1 * | 63 | 171 | 108 | 2.57 |
| CW 2400 075 V1 * | 75 | 195 | 120 | 2.86 |
| CW 2400 080 V1 * | 80 | 205 | 125 | 3.13 |
| CW 2400 100 V1 * | 100 | 245 | 145 | 3.43 |
| CW 2400 125 V1 * | 125 | 295 | 170 | 4.40 |

PED 2014/68/UE

VDI

CNOMO

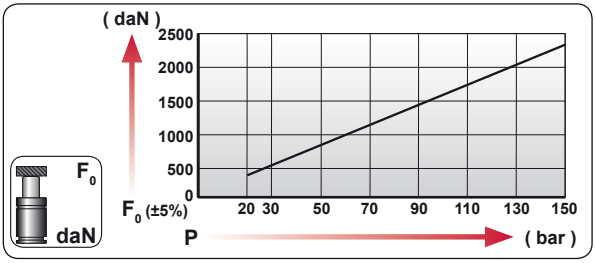


| CODE | bar | psi | $F_0$ daN | $F_1$ daN |
|---|---|---|---|---|
| CW 2400 050 V1 | 150 | 2175 | 2385 | 4500 |
| CW-H 2400 050 V1 | 0 | 0 | --- | --- |

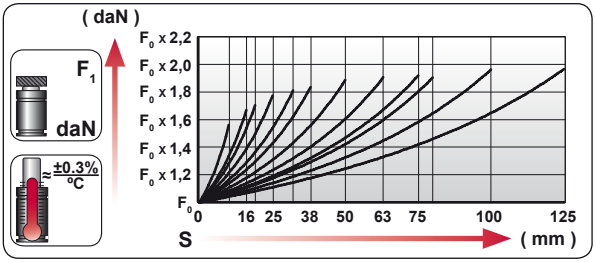


| | |
|---|---|
| ENG | ORDER |
| DEU | BESTELLUNG |
| FRA | COMMANDE |
| ITA | ORDINE |
| ESP | PEDIDO |
| POR | PEDIDO |

$F_0$ daN — S mm

CW 2400 50

CW 2400 050 V1

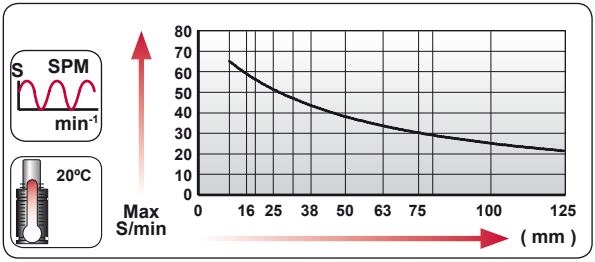


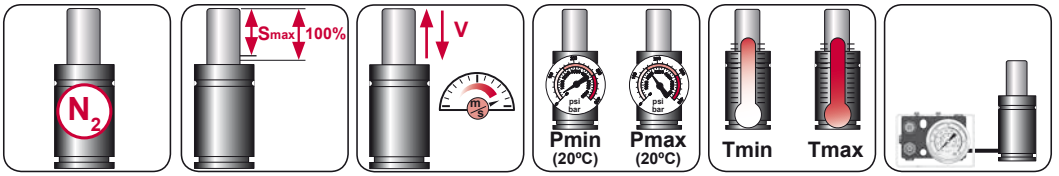


| $N_2$ | Smax < 90% | Vmax 1,6 m/s | bar psi 20 290 | bar psi 150 2175 | °C °F 0 32 | °C °F 80 176 | 600 CP- |
|---|---|---|---|---|---|---|---|

AZOL GAS

# CW 2400 V1

*Compact Height*

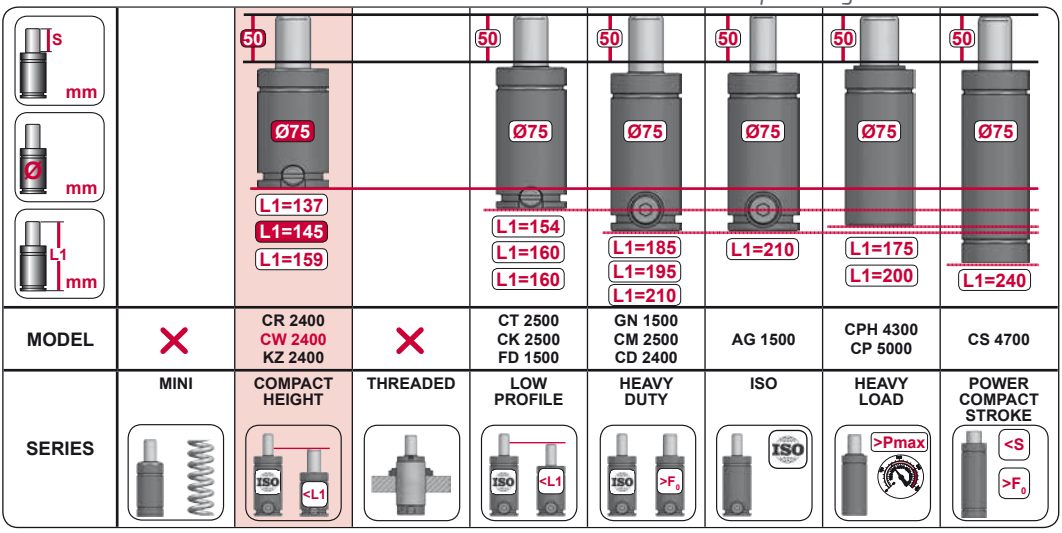


| MODEL | × | CR 2400 **CW 2400** KZ 2400 | × | CT 2500 CK 2500 FD 1500 | GN 1500 CM 2500 CD 2400 | AG 1500 | CPH 4300 CP 5000 | CS 4700 |
|---|---|---|---|---|---|---|---|---|
| SERIES | MINI | COMPACT HEIGHT | THREADED | LOW PROFILE | HEAVY DUTY | ISO | HEAVY LOAD | POWER COMPACT STROKE |

## CW

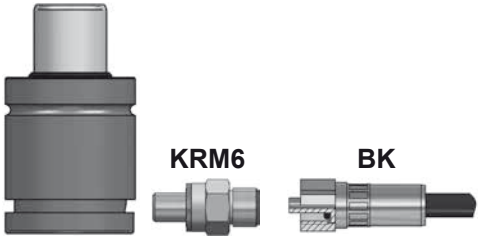


## CWC

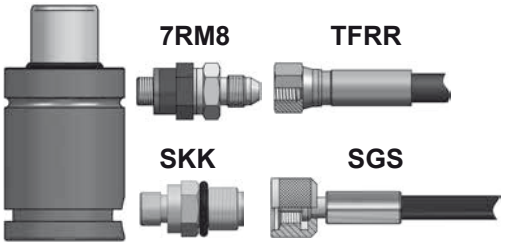





| CODE | | CW 2400 050 V1 | KIT XXXXXXX-S KIT XXXXXXX-C | A14-075 | 06 GA 11 |
|---|---|---|---|---|---|
| ENG | ORDER | GAS SPRING | REPAIR KIT | FLANGE | CHARGING ADAPTER |
| DEU | BESTELLUNG | GASDRUCKFEDER | ERSATZTEILSATZ | FLANSCHE | LADEADAPTER |
| FRA | COMMANDE | RESSORT À GAZ | KIT DE RÉPARATION | BRIDE | RACCORD DE CHARGE |
| ITA | ORDINE | CILINDRO AD AZOTO | KIT DI MANUTENZIONE | FLANGE | ADATTATORE DI CARICO |
| ESP | PEDIDO | RESORTE DE GAS | KIT DE REPARACION | BRIDA | ADAPTADOR DE CARGA |
| POR | PEDIDO | CILINDRO DE GÁS | KIT DE MANUTENÇÃO | FLANGE | ADAPTADOR DE CARGA |

# CWC 2400 V1

*Compact Height*

AZOL GAS

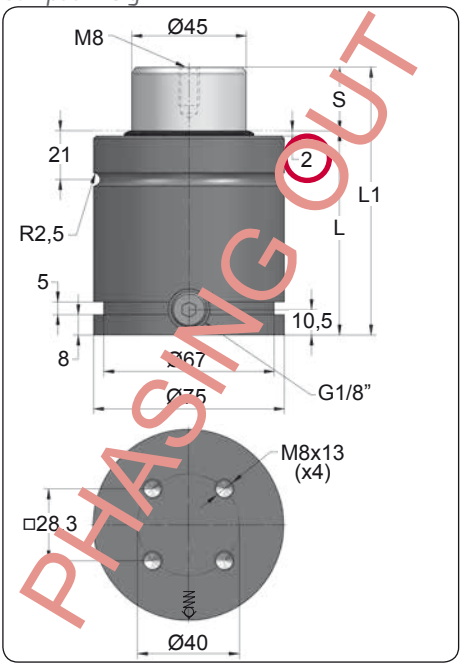


| ORDER | S (mm) | L1 ±0,25 (mm) | L (mm) | Kg. |
|---|---|---|---|---|
| CWC 2400 010 V1 | 10 | 75 | 65 | 1.49 |
| CWC 2400 016 V1 | 16 | 87 | 71 | 1.63 |
| CWC 2400 019 V1 | 19 | 93 | 74 | 1.69 |
| CWC 2400 025 V1 | 25 | 105 | 80 | 1.84 |
| CWC 2400 032 V1 | 32 | 119 | 87 | 1.98 |
| CWC 2400 038 V1 | 38 | 131 | 93 | 2.13 |
| CWC 2400 050 V1 | 50 | 155 | 105 | 2.40 |
| CWC 2400 063 V1 | 63 | 181 | 118 | 2.71 |
| CWC 2400 075 V1 | 75 | 205 | 130 | 3.01 |
| CWC 2400 080 V1 | 80 | 215 | 135 | 3.29 |
| CWC 2400 100 V1 | 100 | 255 | 155 | 3.61 |
| CWC 2400 125 V1 | 125 | 305 | 180 | 4.63 |

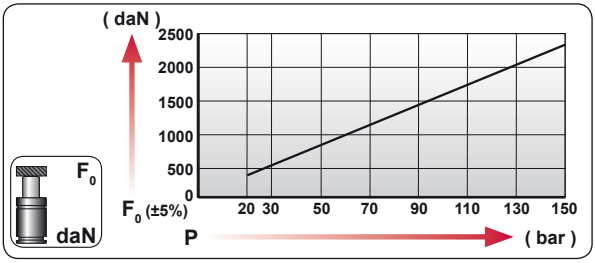


| CODE | bar | psi | F0 daN | F1 daN |
|---|---|---|---|---|
| CWC 2400 050 V1 | 150 | 2175 | 2385 | 4500 |
| CWC-H 2400 050 V1 | 0 | 0 | --- | --- |

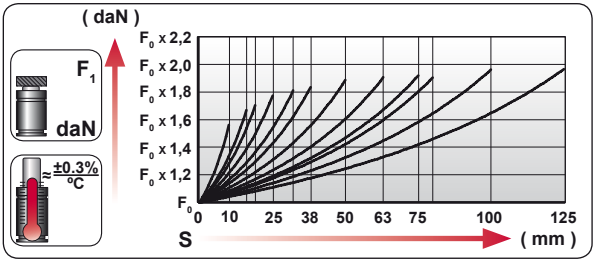


| | |
|---|---|
| ENG | ORDER |
| DEU | BESTELLUNG |
| FRA | COMMANDE |
| ITA | ORDINE |
| ESP | PEDIDO |
| POR | PEDIDO |

F0 daN — S mm

CWC 2400 50

CWC 2400 050 V1

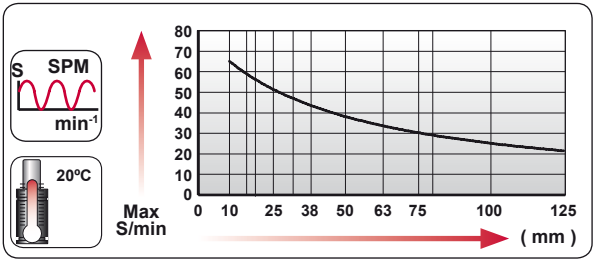


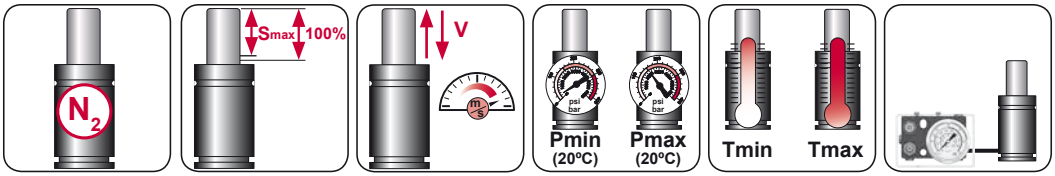


| $N_2$ | Smax < 90% | Vmax 1,6 m/s | bar psi 20 290 | bar psi 150 2175 | °C °F 0 32 | °C °F 80 176 | 600 CP- |
|---|---|---|---|---|---|---|---|

AZOL GAS

# CWC 2400 V1

*Compact Height*




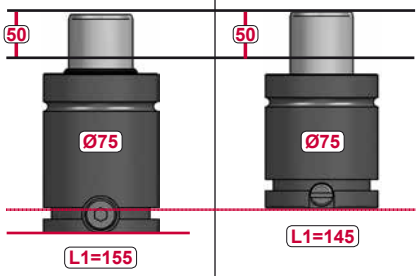


| MODEL | CWC 2400 | CW 2400 |
|---|---|---|

## CW

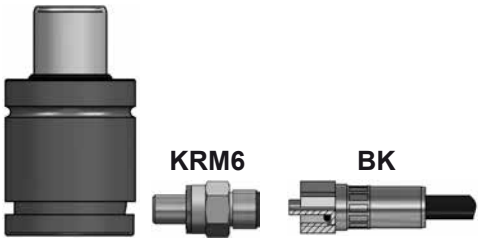


## CWC

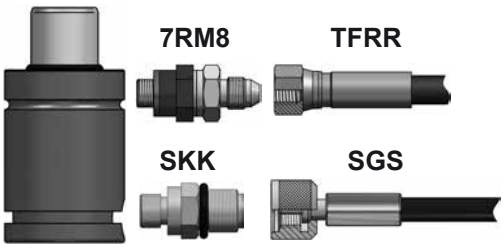









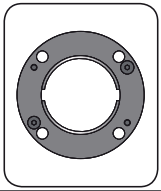

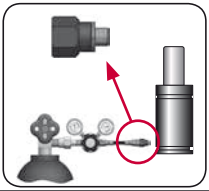

| CODE | | CWC 2400 050 V1 | KIT XXXXXXX-S<br>KIT XXXXXXX-C | A14-075 | 18 GA 5 |
|---|---|---|---|---|---|
| ENG | ORDER | GAS SPRING | REPAIR KIT | FLANGE | CHARGING ADAPTER |
| DEU | BESTELLUNG | GASDRUCKFEDER | ERSATZTEILSATZ | FLANSCHE | LADEADAPTER |
| FRA | COMMANDE | RESSORT À GAZ | KIT DE RÉPARATION | BRIDE | RACCORD DE CHARGE |
| ITA | ORDINE | CILINDRO AD AZOTO | KIT DI MANUTENZIONE | FLANGE | ADATTATORE DI CARICO |
| ESP | PEDIDO | RESORTE DE GAS | KIT DE REPARACION | BRIDA | ADAPTADOR DE CARGA |
| POR | PEDIDO | CILINDRO DE GÁS | KIT DE MANUTENÇÃO | FLANGE | ADAPTADOR DE CARGA |

# CWC 2400 V2

*Compact Height*

AZOL GAS

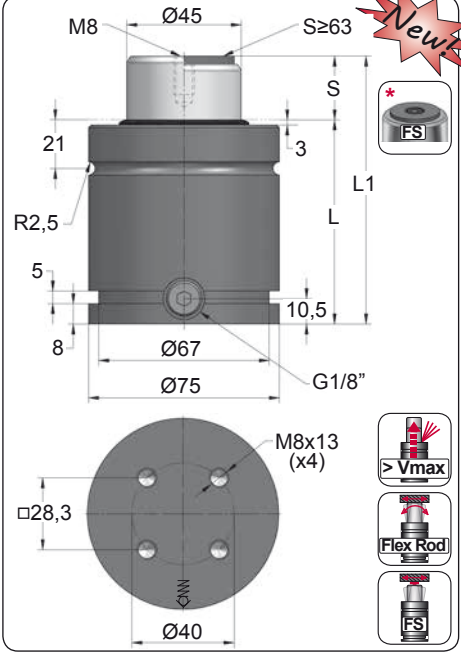


Newt

| ORDER | S (mm) | L1 ±0,25 (mm) | L (mm) | Kg. |
|---|---|---|---|---|
| CWC 2400 010 V2 | 10 | 75 | 65 | 1.49 |
| CWC 2400 016 V2 | 16 | 87 | 71 | 1.63 |
| CWC 2400 019 V2 | 19 | 93 | 74 | 1.69 |
| CWC 2400 025 V2 | 25 | 105 | 80 | 1.84 |
| CWC 2400 032 V2 | 32 | 119 | 87 | 1.98 |
| CWC 2400 038 V2 | 38 | 131 | 93 | 2.13 |
| CWC 2400 050 V2 | 50 | 155 | 105 | 2.40 |
| CWC 2400 063 V2 * | 63 | 181 | 118 | 2.71 |
| CWC 2400 075 V2 * | 75 | 205 | 130 | 3.01 |
| CWC 2400 080 V2 * | 80 | 215 | 135 | 3.29 |
| CWC 2400 100 V2 * | 100 | 255 | 155 | 3.61 |
| CWC 2400 125 V2 * | 125 | 305 | 180 | 4.63 |

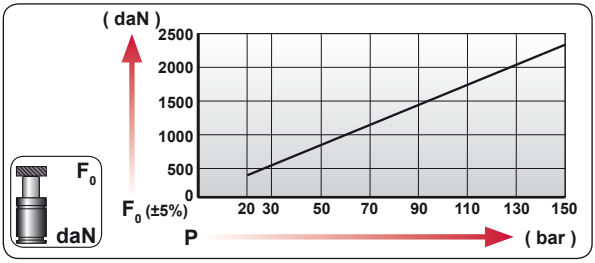


| CODE | bar | psi | F0 daN | F1 daN |
|---|---|---|---|---|
| CWC 2400 050 V2 | 150 | 2175 | 2385 | 4500 |
| CWC-H 2400 050 V2 | 0 | 0 | --- | --- |

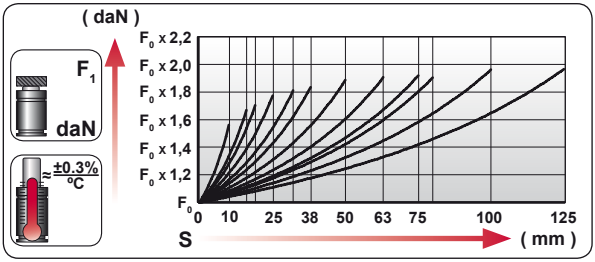


| | |
|---|---|
| ENG | ORDER |
| DEU | BESTELLUNG |
| FRA | COMMANDE |
| ITA | ORDINE |
| ESP | PEDIDO |
| POR | PEDIDO |

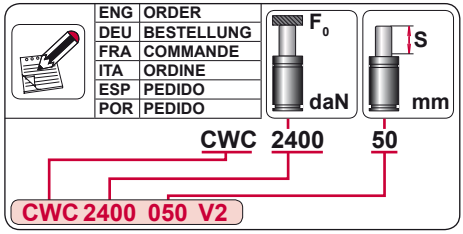


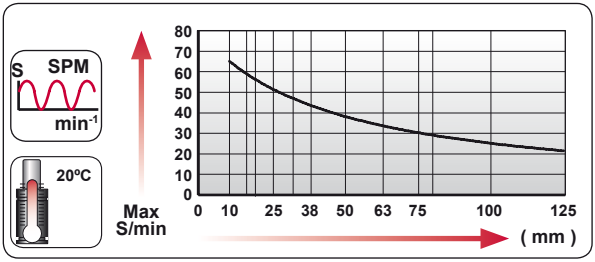


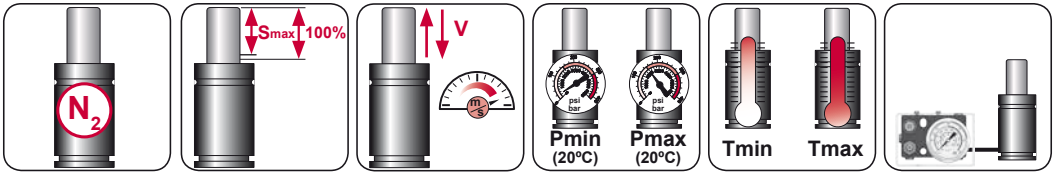


| $N_2$ | Smax < 90% | Vmax 1,6 m/s | bar psi 20 290 | bar psi 150 2175 | °C °F 0 32 | °C °F 80 176 | 600 CP- |
|---|---|---|---|---|---|---|---|

AZOL GAS

# CWC 2400 V2

*Compact Height*




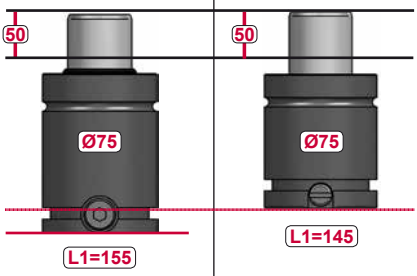


| MODEL | CWC 2400 | CW 2400 |
|---|---|---|

## CW










## CWC



































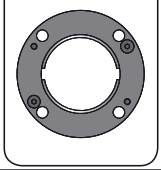

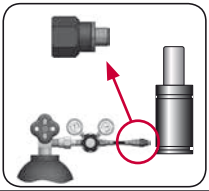

| CODE | | CWC 2400 050 V2 | KIT XXXXXXX-S<br>KIT XXXXXXX-C | A14-075 | 18 GA 5 |
|---|---|---|---|---|---|
| ENG | ORDER | GAS SPRING | REPAIR KIT | FLANGE | CHARGING ADAPTER |
| DEU | BESTELLUNG | GASDRUCKFEDER | ERSATZTEILSATZ | FLANSCHE | LADEADAPTER |
| FRA | COMMANDE | RESSORT À GAZ | KIT DE RÉPARATION | BRIDE | RACCORD DE CHARGE |
| ITA | ORDINE | CILINDRO AD AZOTO | KIT DI MANUTENZIONE | FLANGE | ADATTATORE DI CARICO |
| ESP | PEDIDO | RESORTE DE GAS | KIT DE REPARACION | BRIDA | ADAPTADOR DE CARGA |
| POR | PEDIDO | CILINDRO DE GÁS | KIT DE MANUTENÇÃO | FLANGE | ADAPTADOR DE CARGA |

# CWC 2400 V2 MOUNTS

*Compact Height*

AZOL GAS

## A14-075

E24.54.815.G
EM24.54.700/F

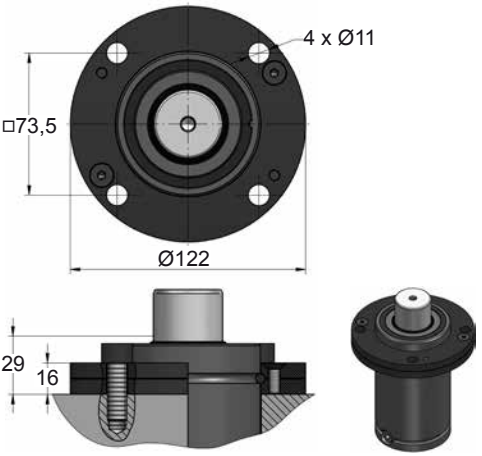


## A34-075

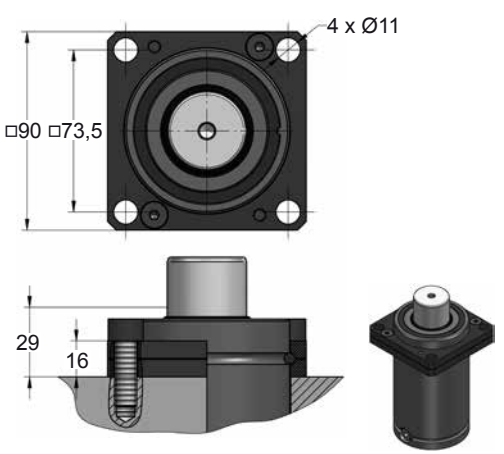


## B36-075

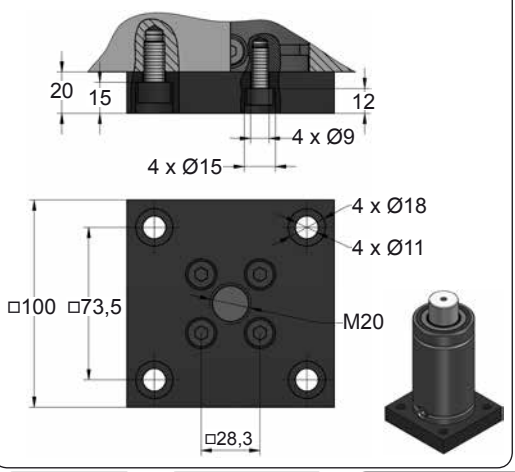


## B41-075

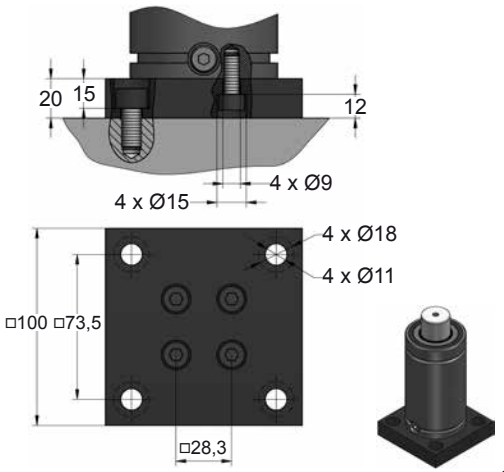









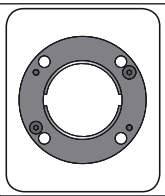

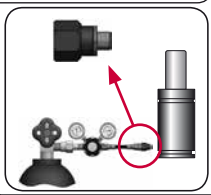

| CODE | | CWC 2400 050 V2 | KIT XXXXXXX-S<br>KIT XXXXXXX-C | A14-075 | 18 GA 5 |
|---|---|---|---|---|---|
| ENG | ORDER | GAS SPRING | REPAIR KIT | FLANGE | CHARGING ADAPTER |
| DEU | BESTELLUNG | GASDRUCKFEDER | ERSATZTEILSATZ | FLANSCHE | LADEADAPTER |
| FRA | COMMANDE | RESSORT À GAZ | KIT DE RÉPARATION | BRIDE | RACCORD DE CHARGE |
| ITA | ORDINE | CILINDRO AD AZOTO | KIT DI MANUTENZIONE | FLANGE | ADATTATORE DI CARICO |
| ESP | PEDIDO | RESORTE DE GAS | KIT DE REPARACION | BRIDA | ADAPTADOR DE CARGA |
| POR | PEDIDO | CILINDRO DE GÁS | KIT DE MANUTENÇÃO | FLANGE | ADAPTADOR DE CARGA |

AZOL GAS

# CWC 2400 V2 MOUNTS

*Compact Height*

## C05-075

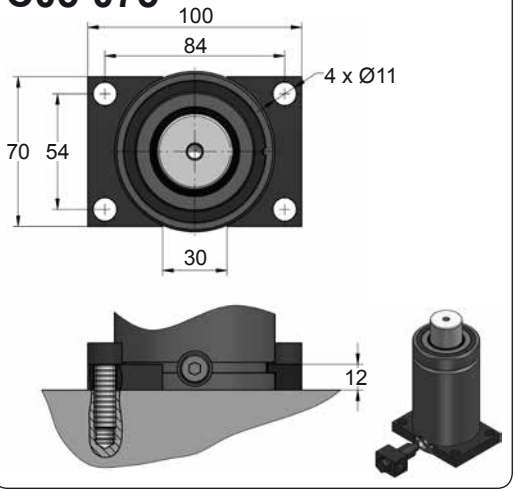


## C20-075

ISO · VDI · E24.54.815.G EM24.54.700/F

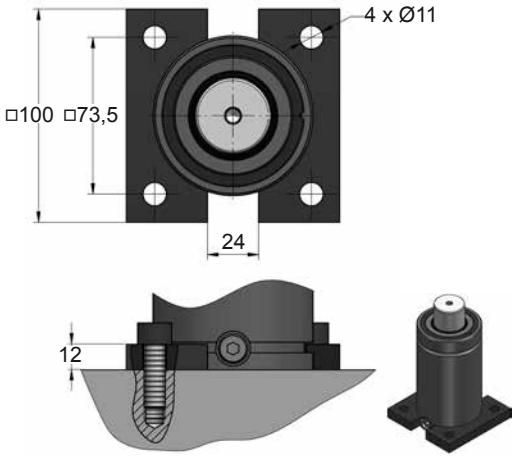


## D02-075

ISO · E24.54.815.G EM24.54.700/F

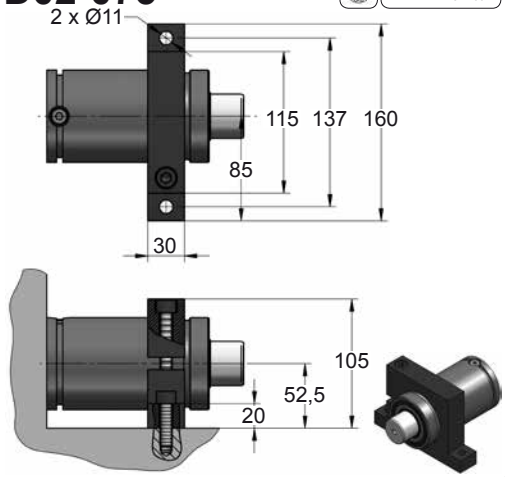


## D67-075

VDI

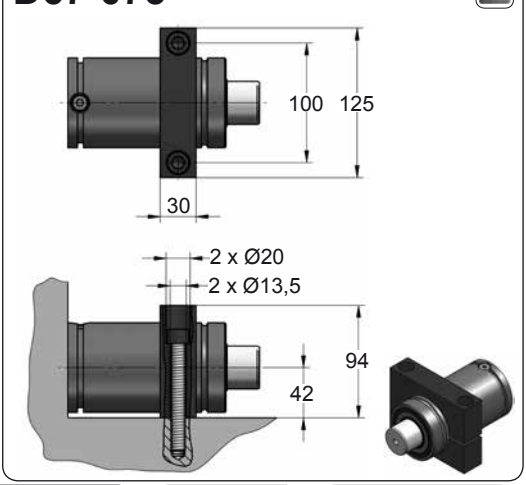









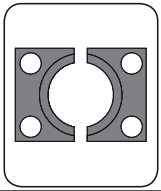

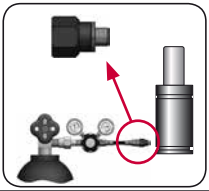

| CODE | | CWC 2400 050 V2 | KIT XXXXXXX-S<br>KIT XXXXXXX-C | C05-075 | 18 GA 5 |
|---|---|---|---|---|---|
| ENG | ORDER | GAS SPRING | REPAIR KIT | FLANGE | CHARGING ADAPTER |
| DEU | BESTELLUNG | GASDRUCKFEDER | ERSATZTEILSATZ | FLANSCHE | LADEADAPTER |
| FRA | COMMANDE | RESSORT À GAZ | KIT DE RÉPARATION | BRIDE | RACCORD DE CHARGE |
| ITA | ORDINE | CILINDRO AD AZOTO | KIT DI MANUTENZIONE | FLANGE | ADATTATORE DI CARICO |
| ESP | PEDIDO | RESORTE DE GAS | KIT DE REPARACION | BRIDA | ADAPTADOR DE CARGA |
| POR | PEDIDO | CILINDRO DE GÁS | KIT DE MANUTENÇÃO | FLANGE | ADAPTADOR DE CARGA |

# CW 4200

*Compact Height*

AZOL GAS

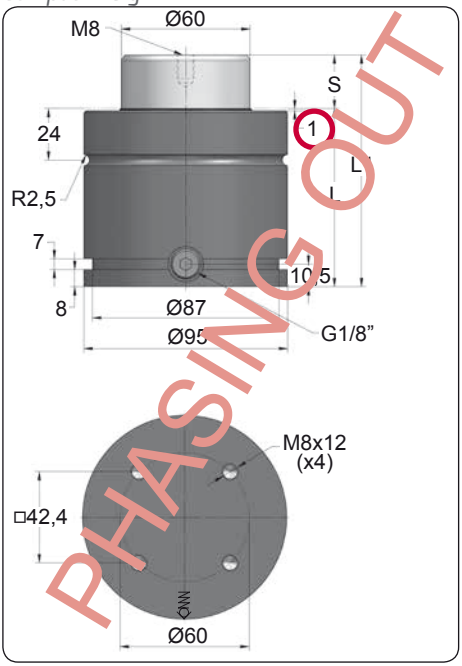


PHASING OUT

| ORDER | S (mm) | L1 ±0,25 (mm) | L (mm) | Kg. |
|---|---|---|---|---|
| CW 4200 016 | 16 | 90 | 74 | 3.35 |
| CW 4200 019 | 19 | 96 | 77 | 3.45 |
| CW 4200 025 | 25 | 108 | 83 | 3.65 |
| CW 4200 032 | 32 | 122 | 90 | 3.90 |
| CW 4200 038 | 38 | 134 | 96 | 4.09 |
| CW 4200 050 | 50 | 158 | 108 | 4.50 |
| CW 4200 063 | 63 | 184 | 121 | 4.93 |
| CW 4200 075 | 75 | 208 | 133 | 5.30 |
| CW 4200 080 | 80 | 218 | 138 | 5.54 |
| CW 4200 100 | 100 | 258 | 158 | 6.29 |
| CW 4200 125 | 125 | 308 | 183 | 7.21 |

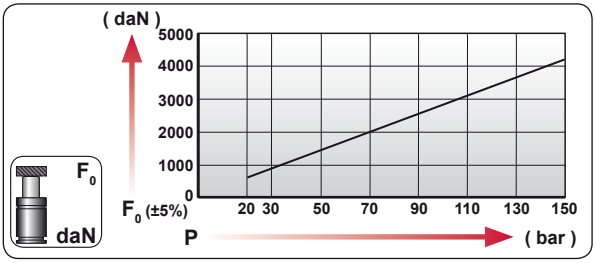


| CODE | bar | psi | $F_0$ daN | $F_1$ daN |
|---|---|---|---|---|
| CW 4200 050 | 150 | 2175 | 4240 | 8335 |
| CW-H 4200 050 | 0 | 0 | --- | --- |

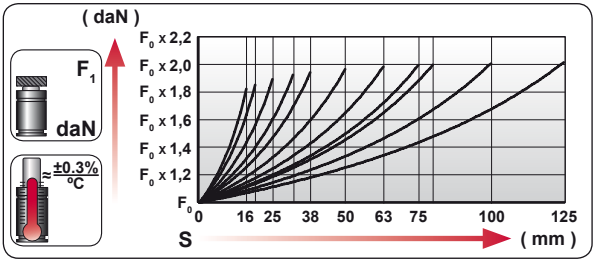


| | |
|---|---|
| ENG | ORDER |
| DEU | BESTELLUNG |
| FRA | COMMANDE |
| ITA | ORDINE |
| ESP | PEDIDO |
| POR | PEDIDO |

$F_0$ daN — S mm

CW 4200 50

CW 4200 050

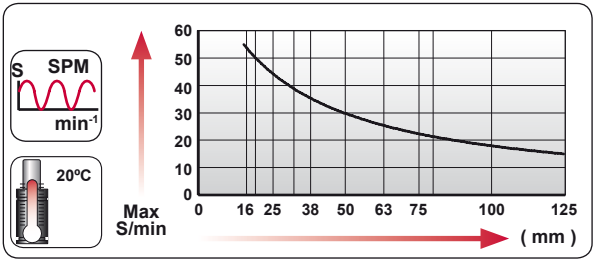


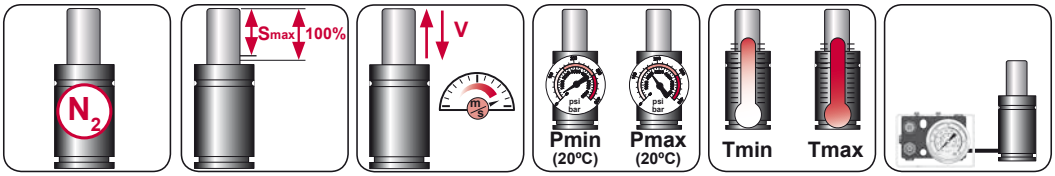


| $N_2$ | Smax < 90% | Vmax 1,6 m/s | bar psi 20 290 | bar psi 150 2175 | °C °F 0 32 | °C °F 80 176 | 600 CP- |
|---|---|---|---|---|---|---|---|

AZOL GAS

# CW 4200

*Compact Height*

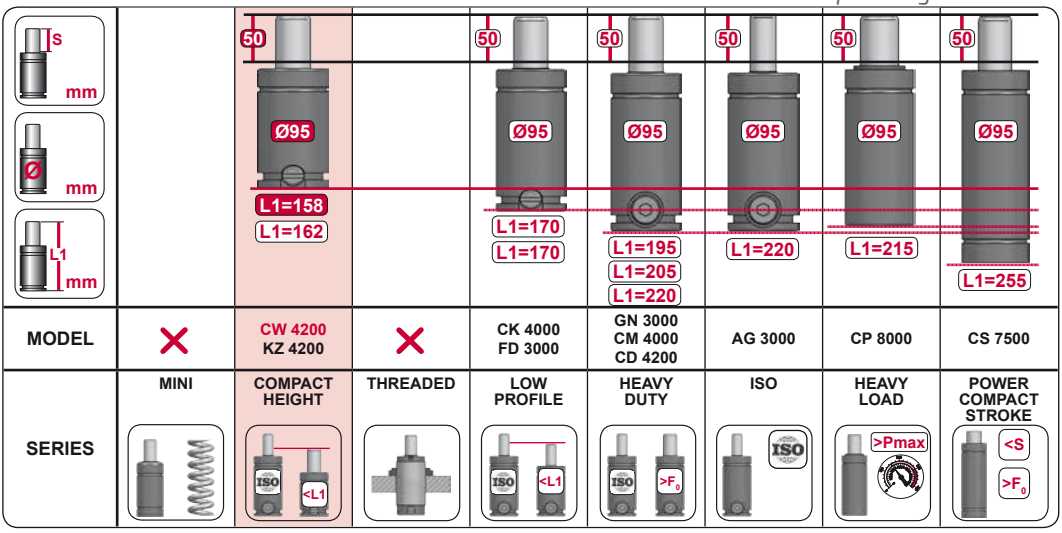


| | | | | | | | | |
|---|---|---|---|---|---|---|---|---|
| **MODEL** | ✕ | CW 4200<br>KZ 4200 | ✕ | CK 4000<br>FD 3000 | GN 3000<br>CM 4000<br>CD 4200 | AG 3000 | CP 8000 | CS 7500 |
| **SERIES** | MINI | COMPACT HEIGHT | THREADED | LOW PROFILE | HEAVY DUTY | ISO | HEAVY LOAD | POWER COMPACT STROKE |




| CODE | CW 4200 050 | KIT XXXXXXX-S<br>KIT XXXXXXX-C | A14-095 | 18 GA 5 |
|---|---|---|---|---|
| ENG ORDER | GAS SPRING | REPAIR KIT | FLANGE | CHARGING ADAPTER |
| DEU BESTELLUNG | GASDRUCKFEDER | ERSATZTEILSATZ | FLANSCHE | LADEADAPTER |
| FRA COMMANDE | RESSORT À GAZ | KIT DE RÉPARATION | BRIDE | RACCORD DE CHARGE |
| ITA ORDINE | CILINDRO AD AZOTO | KIT DI MANUTENZIONE | FLANGE | ADATTATORE DI CARICO |
| ESP PEDIDO | RESORTE DE GAS | KIT DE REPARACION | BRIDA | ADAPTADOR DE CARGA |
| POR PEDIDO | CILINDRO DE GÁS | KIT DE MANUTENÇÃO | FLANGE | ADAPTADOR DE CARGA |

# CW 4200 V1

*Compact Height*

| | | | | | |
|---|---|---|---|---|---|
| **BMW** | B2 4005 | **FORD** | W-DX35-6204 | **PSA** | E24.54.815.G |
| **MB** | B8 3180 220 000 004 | | | | |
| **VW** | 39D 997 | | | | |

AZOL GAS

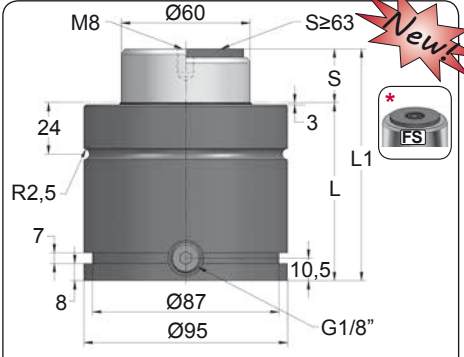


| ORDER | S (mm) | L1 ±0,25 (mm) | L (mm) | Kg. |
|---|---|---|---|---|
| CW 4200 016 V1 | 16 | 90 | 74 | 3.35 |
| CW 4200 019 V1 | 19 | 96 | 77 | 3.45 |
| CW 4200 025 V1 | 25 | 108 | 83 | 3.65 |
| CW 4200 032 V1 | 32 | 122 | 90 | 3.90 |
| CW 4200 038 V1 | 38 | 134 | 96 | 4.09 |
| CW 4200 050 V1 | 50 | 158 | 108 | 4.50 |
| CW 4200 063 V1 * | 63 | 184 | 121 | 4.93 |
| CW 4200 075 V1 * | 75 | 208 | 133 | 5.30 |
| CW 4200 080 V1 * | 80 | 218 | 138 | 5.54 |
| CW 4200 100 V1 * | 100 | 258 | 158 | 6.29 |
| CW 4200 125 V1 * | 125 | 308 | 183 | 7.21 |

APPROVED PED 97/23/CE

VDI

CNOMO

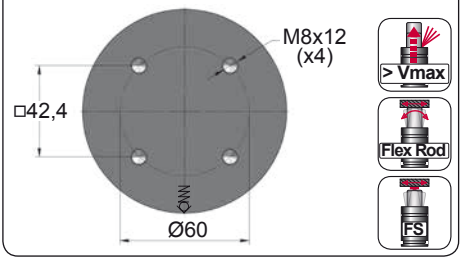


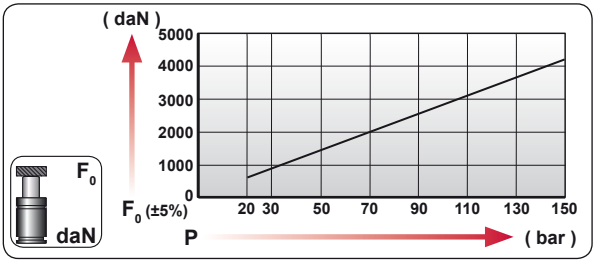


| CODE | bar | psi | $F_0$ daN | $F_1$ daN |
|---|---|---|---|---|
| CW 4200 050 V1 | 150 | 2175 | 4240 | 8335 |
| CW-H 4200 050 V1 | 0 | 0 | --- | --- |

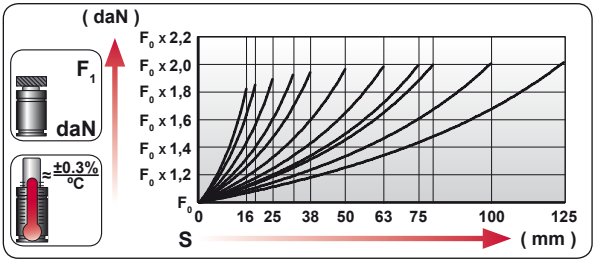


| | |
|---|---|
| ENG | ORDER |
| DEU | BESTELLUNG |
| FRA | COMMANDE |
| ITA | ORDINE |
| ESP | PEDIDO |
| POR | PEDIDO |

$F_0$ daN — S mm

CW 4200 50

CW 4200 050 V1

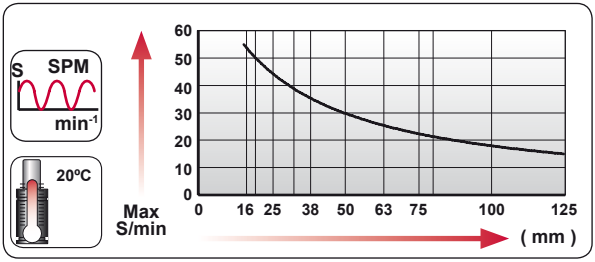


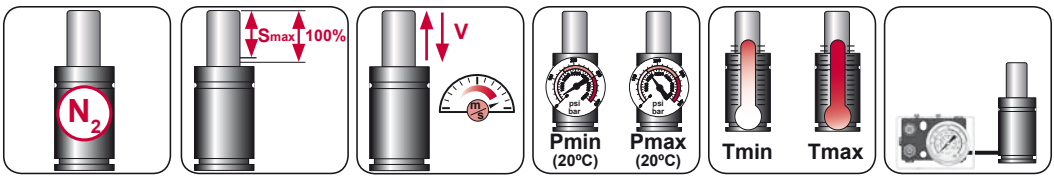


| $N_2$ | Smax < 90% | Vmax 1,6 m/s | bar psi 20 290 | bar psi 150 2175 | °C °F 0 32 | °C °F 80 176 | 600 CP- |
|---|---|---|---|---|---|---|---|

AZOL GAS

# CW 4200 V1 MOUNTS

*Compact Height*

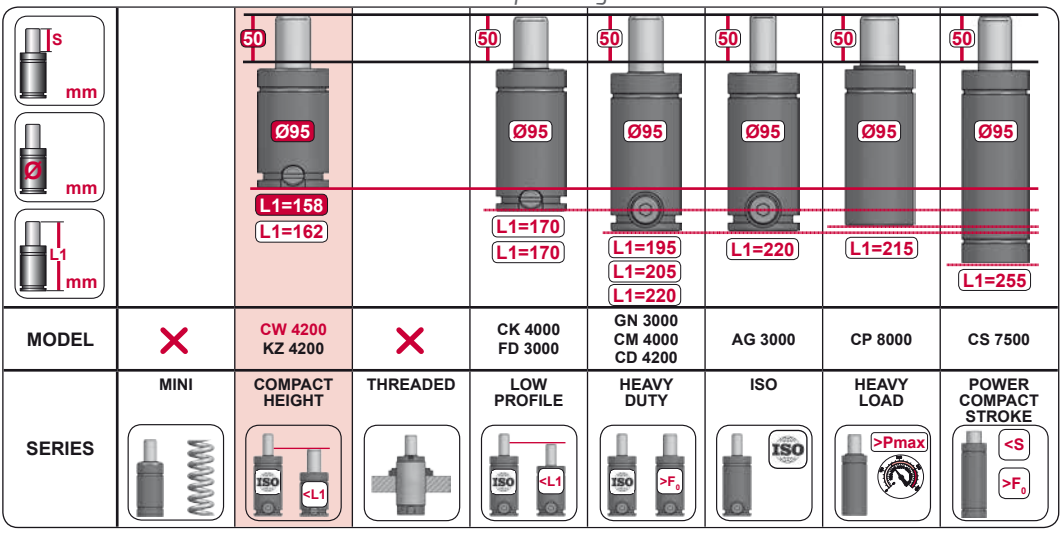


| | | | | | | | | |
|---|---|---|---|---|---|---|---|---|
| MODEL | ✕ | CW 4200<br>KZ 4200 | ✕ | CK 4000<br>FD 3000 | GN 3000<br>CM 4000<br>CD 4200 | AG 3000 | CP 8000 | CS 7500 |
| SERIES | MINI | COMPACT HEIGHT | THREADED | LOW PROFILE | HEAVY DUTY | ISO | HEAVY LOAD | POWER COMPACT STROKE |

## A14-095

ISO E24.54.815.G EM24.54.700/F

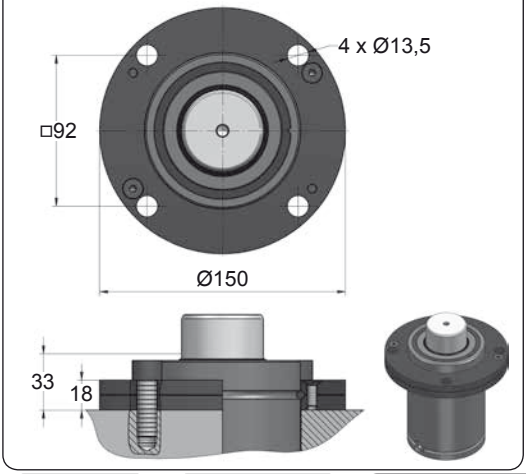


## A34-095

ISO VDI

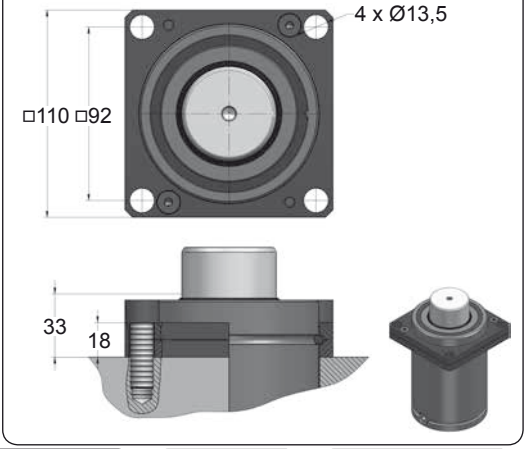





| CODE | | CW 4200 050 V1 | KIT XXXXXXX-S<br>KIT XXXXXXX-C | A14-095 | 18 GA 5 |
|---|---|---|---|---|---|
| ENG | ORDER | GAS SPRING | REPAIR KIT | FLANGE | CHARGING ADAPTER |
| DEU | BESTELLUNG | GASDRUCKFEDER | ERSATZTEILSATZ | FLANSCHE | LADEADAPTER |
| FRA | COMMANDE | RESSORT À GAZ | KIT DE RÉPARATION | BRIDE | RACCORD DE CHARGE |
| ITA | ORDINE | CILINDRO AD AZOTO | KIT DI MANUTENZIONE | FLANGE | ADATTATORE DI CARICO |
| ESP | PEDIDO | RESORTE DE GAS | KIT DE REPARACION | BRIDA | ADAPTADOR DE CARGA |
| POR | PEDIDO | CILINDRO DE GÁS | KIT DE MANUTENÇÃO | FLANGE | ADAPTADOR DE CARGA |

# CW 4200 V1 MOUNTS

*Compact Height*

AZOL GAS

## B36-095

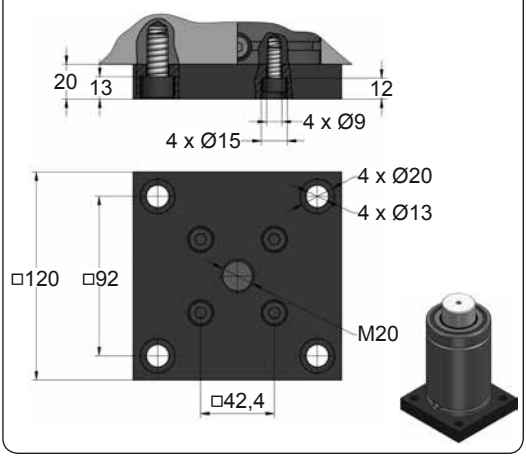


## B41-095

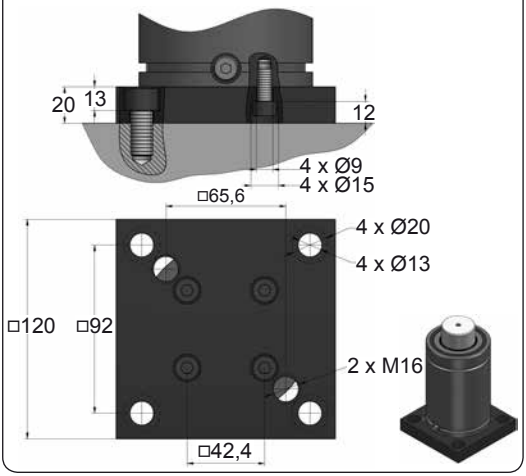


## C05-095

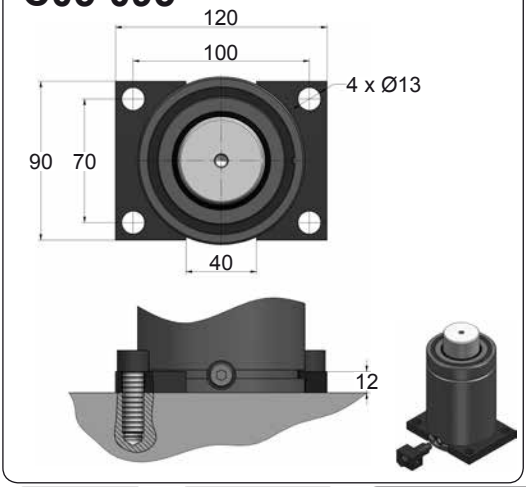


## C20-095

ISO · VDI · E24.54.815.G · EM24.54.700/F

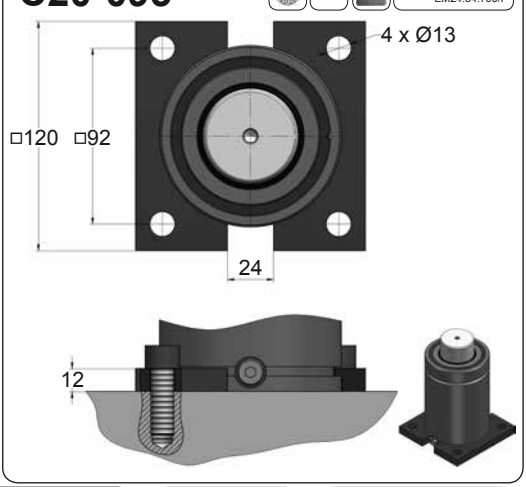









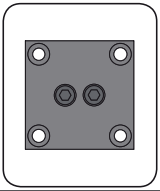

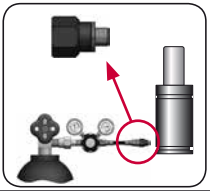

| CODE | | CW 4200 050 V1 | KIT XXXXXXX-S<br>KIT XXXXXXX-C | B36-095 | 18 GA 5 |
|---|---|---|---|---|---|
| ENG | ORDER | GAS SPRING | REPAIR KIT | FLANGE | CHARGING ADAPTER |
| DEU | BESTELLUNG | GASDRUCKFEDER | ERSATZTEILSATZ | FLANSCHE | LADEADAPTER |
| FRA | COMMANDE | RESSORT À GAZ | KIT DE RÉPARATION | BRIDE | RACCORD DE CHARGE |
| ITA | ORDINE | CILINDRO AD AZOTO | KIT DI MANUTENZIONE | FLANGE | ADATTATORE DI CARICO |
| ESP | PEDIDO | RESORTE DE GAS | KIT DE REPARACION | BRIDA | ADAPTADOR DE CARGA |
| POR | PEDIDO | CILINDRO DE GÁS | KIT DE MANUTENÇÃO | FLANGE | ADAPTADOR DE CARGA |

AZOL GAS

# CW 4200 V1 MOUNTS

*Compact Height*

## D02-095

ISO E24.54.815.G EM24.54.700/F

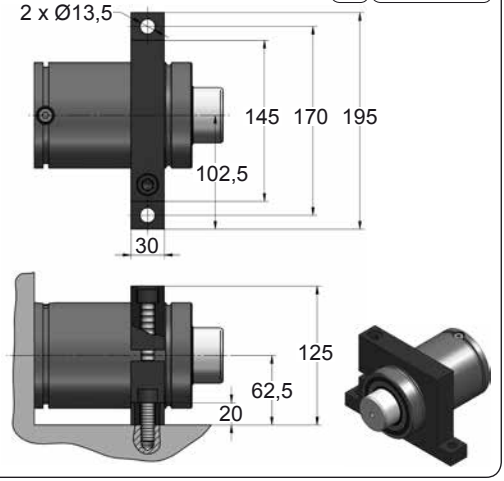


## D67-095

VDI

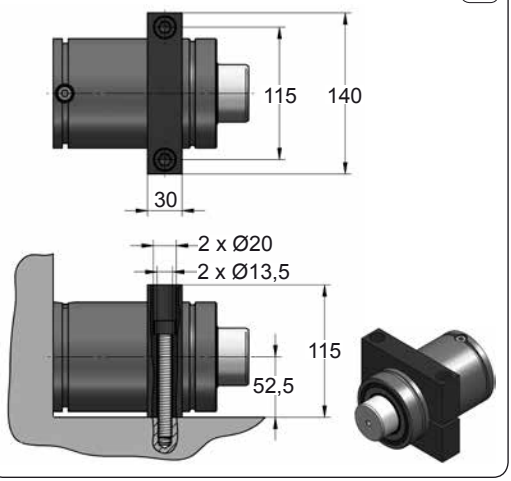









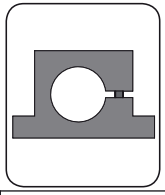

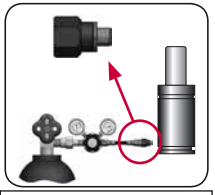

| CODE | | CW 4200 050 V1 | KIT XXXXXXX-S<br>KIT XXXXXXX-C | D02-095 | 18 GA 5 |
|---|---|---|---|---|---|
| ENG | ORDER | GAS SPRING | REPAIR KIT | FLANGE | CHARGING ADAPTER |
| DEU | BESTELLUNG | GASDRUCKFEDER | ERSATZTEILSATZ | FLANSCHE | LADEADAPTER |
| FRA | COMMANDE | RESSORT À GAZ | KIT DE RÉPARATION | BRIDE | RACCORD DE CHARGE |
| ITA | ORDINE | CILINDRO AD AZOTO | KIT DI MANUTENZIONE | FLANGE | ADATTATORE DI CARICO |
| ESP | PEDIDO | RESORTE DE GAS | KIT DE REPARACION | BRIDA | ADAPTADOR DE CARGA |
| POR | PEDIDO | CILINDRO DE GÁS | KIT DE MANUTENÇÃO | FLANGE | ADAPTADOR DE CARGA |

# CW 6600

*Compact Height*

| | | | |
|---|---|---|---|
| **BMW** | B2 4005 | **FORD** | W-DX35-6204 |
| **MB** | B8 3180 220 000 004 | | |
| **VW** | 39D 997 | | |

AZOL GAS

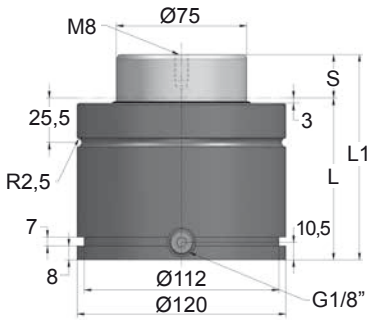


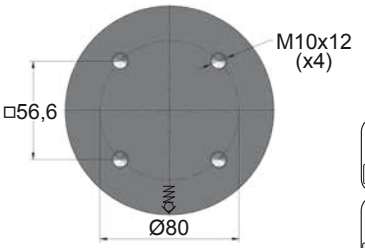


> Vmax

Flex Rod

| ORDER | S (mm) | L1 ±0,25 (mm) | L (mm) | Kg. |
|---|---|---|---|---|
| CW 6600 016 | 16 | 100 | 84 | 6.08 |
| CW 6600 019 | 19 | 106 | 87 | 6.24 |
| CW 6600 025 | 25 | 118 | 93 | 6.57 |
| CW 6600 032 | 32 | 132 | 100 | 6.95 |
| CW 6600 038 | 38 | 144 | 106 | 7.27 |
| CW 6600 050 | 50 | 168 | 118 | 7.92 |
| CW 6600 063 | 63 | 194 | 131 | 8.63 |
| CW 6600 075 | 75 | 218 | 143 | 9.28 |
| CW 6600 080 | 80 | 228 | 148 | 9.55 |
| CW 6600 100 | 100 | 268 | 168 | 10.64 |
| CW 6600 125 | 125 | 318 | 193 | 12.00 |

PED

VDI

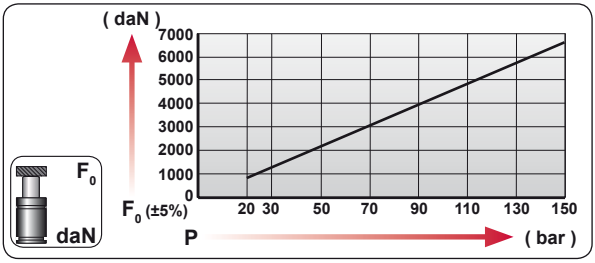


| CODE | bar | psi | $F_0$ daN | $F_1$ daN |
|---|---|---|---|---|
| CW 6600 050 | 150 | 2175 | 6630 | 12380 |
| CW-H 6600 050 | 0 | 0 | --- | --- |

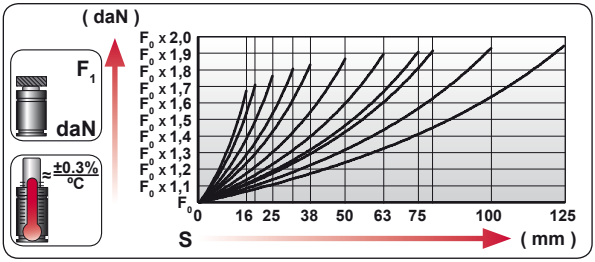


| | |
|---|---|
| ENG | ORDER |
| DEU | BESTELLUNG |
| FRA | COMMANDE |
| ITA | ORDINE |
| ESP | PEDIDO |
| POR | PEDIDO |

$F_0$ daN

S mm

CW 6600 50

CW 6600 050

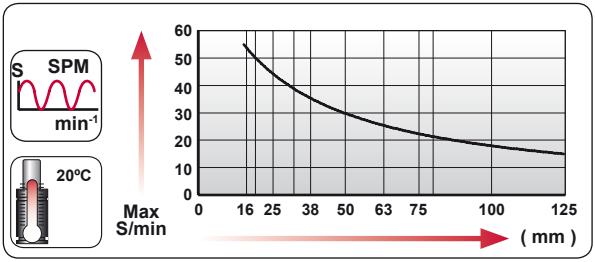


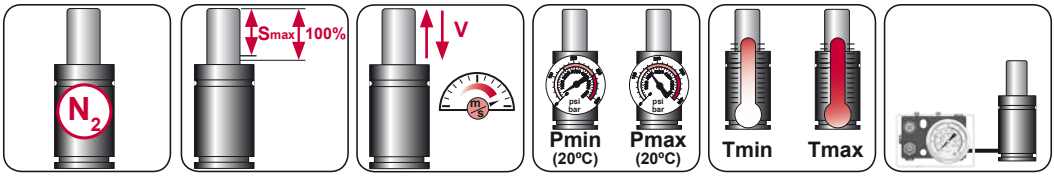


| $N_2$ | Smax < 90% | Vmax 1,6 m/s | bar psi 20 290 | bar psi 150 2175 | ºC ºF 0 32 | ºC ºF 80 176 | 600 CP- |
|---|---|---|---|---|---|---|---|

AZOL GAS

# CW 6600 MOUNTS

*Compact Height*

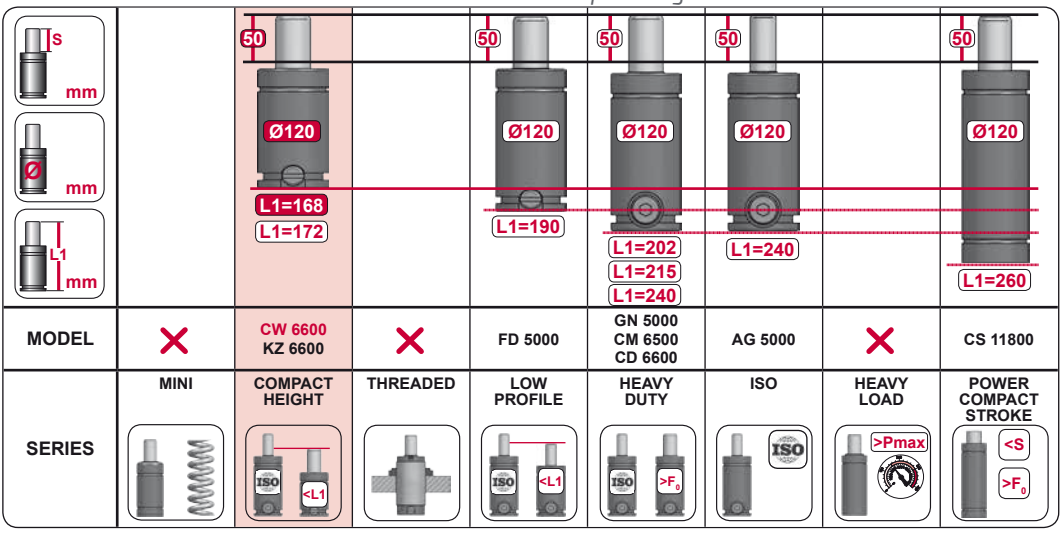


| MODEL | | CW 6600 KZ 6600 | | FD 5000 | GN 5000 CM 6500 CD 6600 | AG 5000 | | CS 11800 |
|---|---|---|---|---|---|---|---|---|
| SERIES | MINI | COMPACT HEIGHT | THREADED | LOW PROFILE | HEAVY DUTY | ISO | HEAVY LOAD | POWER COMPACT STROKE |

## A14-120

ISO E24.54.815.G EM24.54.700/F

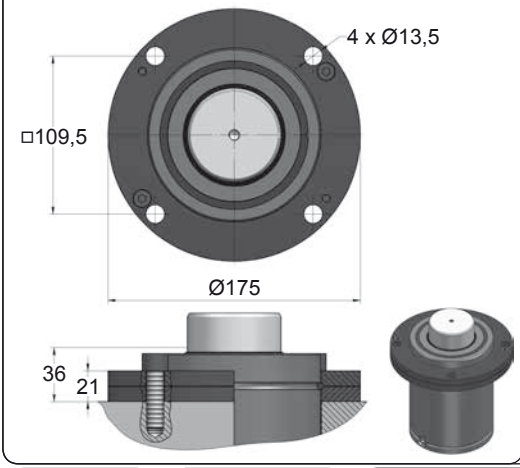


## A34-120

ISO VDI

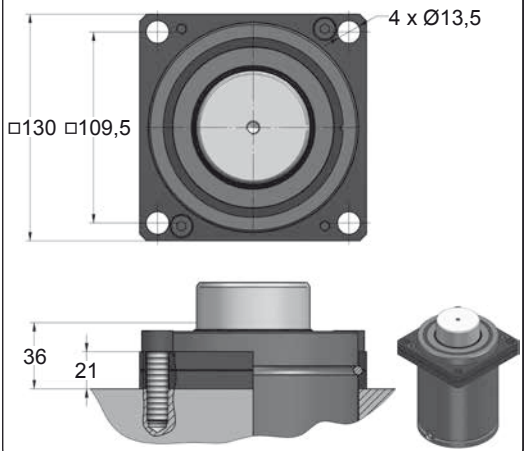





| CODE | | CW 6600 050 | KIT XXXXXXX-S KIT XXXXXXX-C | A14-120 | 18 GA 5 |
|---|---|---|---|---|---|
| ENG | ORDER | GAS SPRING | REPAIR KIT | FLANGE | CHARGING ADAPTER |
| DEU | BESTELLUNG | GASDRUCKFEDER | ERSATZTEILSATZ | FLANSCHE | LADEADAPTER |
| FRA | COMMANDE | RESSORT À GAZ | KIT DE RÉPARATION | BRIDE | RACCORD DE CHARGE |
| ITA | ORDINE | CILINDRO AD AZOTO | KIT DI MANUTENZIONE | FLANGE | ADATTATORE DI CARICO |
| ESP | PEDIDO | RESORTE DE GAS | KIT DE REPARACION | BRIDA | ADAPTADOR DE CARGA |
| POR | PEDIDO | CILINDRO DE GÁS | KIT DE MANUTENÇÃO | FLANGE | ADAPTADOR DE CARGA |

# CW 6600 MOUNTS

*Compact Height*

AZOL GAS

## B36-120

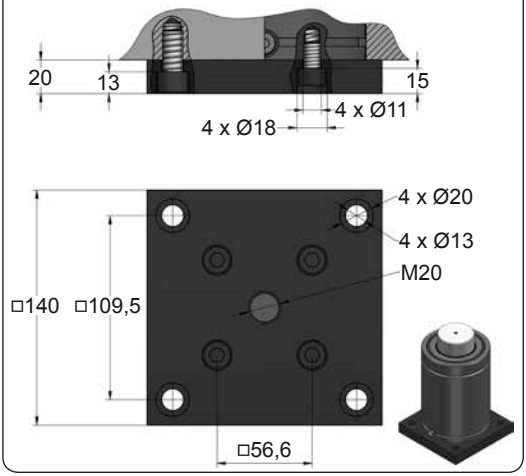


## B41-120

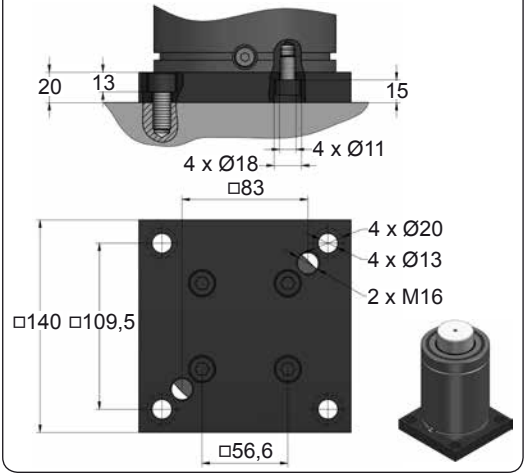


## C05-120

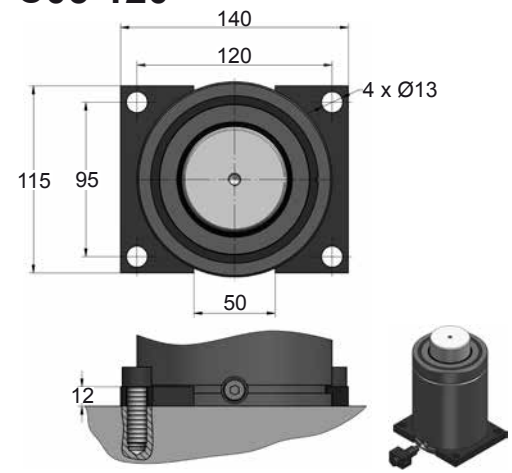


## C20-120

E24.54.815.G
EM24.54.700/F

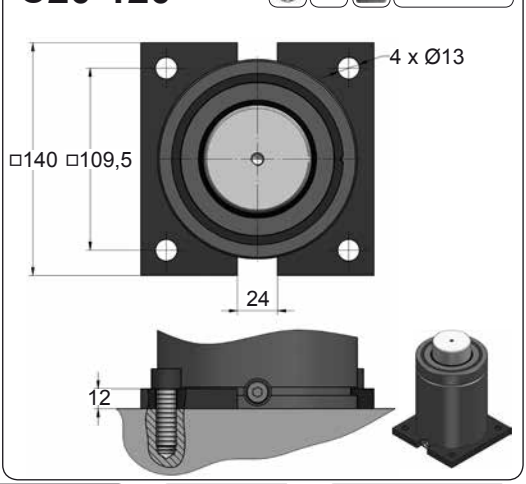









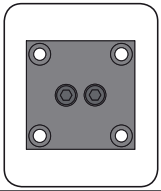

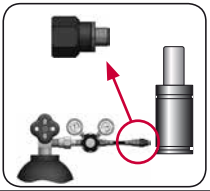

| CODE | | CW 6600 050 | KIT XXXXXXX-S<br>KIT XXXXXXX-C | B36-120 | 18 GA 5 |
|---|---|---|---|---|---|
| ENG | ORDER | GAS SPRING | REPAIR KIT | FLANGE | CHARGING ADAPTER |
| DEU | BESTELLUNG | GASDRUCKFEDER | ERSATZTEILSATZ | FLANSCHE | LADEADAPTER |
| FRA | COMMANDE | RESSORT À GAZ | KIT DE RÉPARATION | BRIDE | RACCORD DE CHARGE |
| ITA | ORDINE | CILINDRO AD AZOTO | KIT DI MANUTENZIONE | FLANGE | ADATTATORE DI CARICO |
| ESP | PEDIDO | RESORTE DE GAS | KIT DE REPARACION | BRIDA | ADAPTADOR DE CARGA |
| POR | PEDIDO | CILINDRO DE GÁS | KIT DE MANUTENÇÃO | FLANGE | ADAPTADOR DE CARGA |

AZOL GAS

# CW 6600 MOUNTS

*Compact Height*

## D02-120

ISO E24.54.815.G
EM24.54.700/F

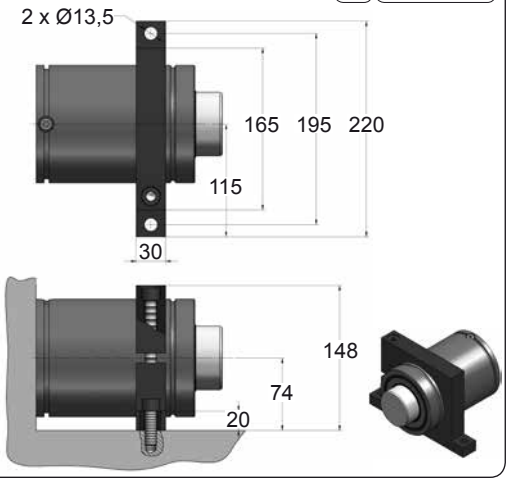


## D67-120

VDI

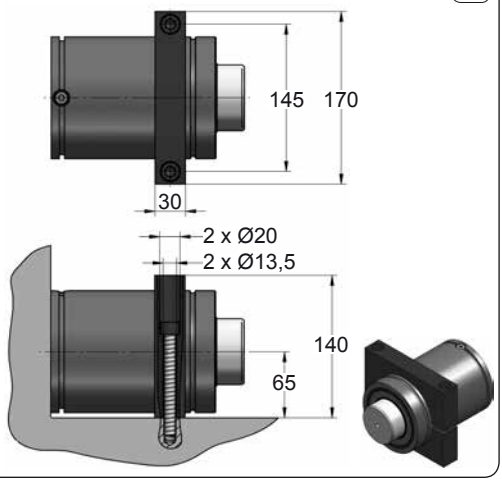




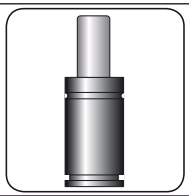




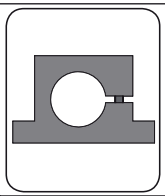

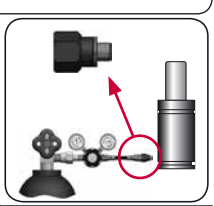

| CODE | | CW 6600 050 | KIT XXXXXXX-S<br>KIT XXXXXXX-C | D02-120 | 18 GA 5 |
|---|---|---|---|---|---|
| ENG | ORDER | GAS SPRING | REPAIR KIT | FLANGE | CHARGING ADAPTER |
| DEU | BESTELLUNG | GASDRUCKFEDER | ERSATZTEILSATZ | FLANSCHE | LADEADAPTER |
| FRA | COMMANDE | RESSORT À GAZ | KIT DE RÉPARATION | BRIDE | RACCORD DE CHARGE |
| ITA | ORDINE | CILINDRO AD AZOTO | KIT DI MANUTENZIONE | FLANGE | ADATTATORE DI CARICO |
| ESP | PEDIDO | RESORTE DE GAS | KIT DE REPARACION | BRIDA | ADAPTADOR DE CARGA |
| POR | PEDIDO | CILINDRO DE GÁS | KIT DE MANUTENÇÃO | FLANGE | ADAPTADOR DE CARGA |

# CW 9500

*Compact Height*

| | | | |
|---|---|---|---|
| **BMW** | B2 4005 | **FORD** | W-DX35-6204 |
| **MB** | B8 3180 220 000 004 | | |
| **VW** | 39D 997 | | |

AZOL GAS

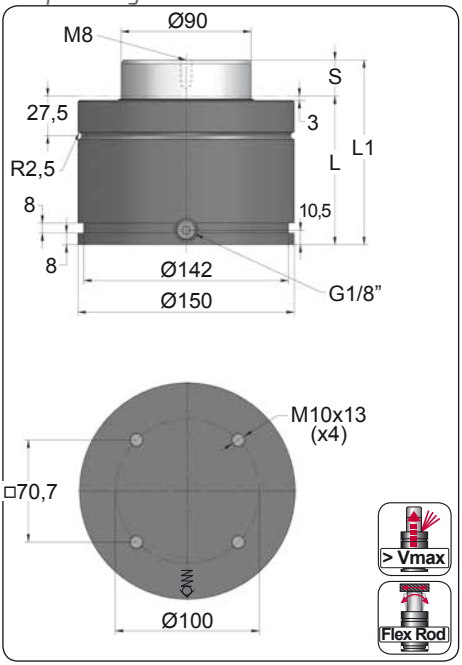


| ORDER | S (mm) | L1 ±0,25 (mm) | L (mm) | Kg. |
|---|---|---|---|---|
| CW 9500 019 | 19 | 116 | 97 | 11.07 |
| CW 9500 025 | 25 | 128 | 103 | 11.56 |
| CW 9500 032 | 32 | 142 | 110 | 12.14 |
| CW 9500 038 | 38 | 154 | 116 | 12.63 |
| CW 9500 050 | 50 | 178 | 128 | 13.62 |
| CW 9500 063 | 63 | 204 | 141 | 14.69 |
| CW 9500 075 | 75 | 228 | 153 | 15.68 |
| CW 9500 080 | 80 | 238 | 158 | 16.10 |
| CW 9500 100 | 100 | 278 | 178 | 17.74 |
| CW 9500 125 | 125 | 328 | 203 | 19.81 |

PED APPROVED 97/23/CE

VDI

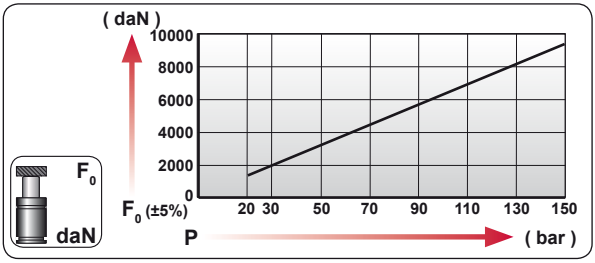


| CODE | bar | psi | $F_0$ daN | $F_1$ daN |
|---|---|---|---|---|
| CW 9500 050 | 150 | 2175 | 9540 | 16800 |
| CW-H 9500 050 | 0 | 0 | --- | --- |

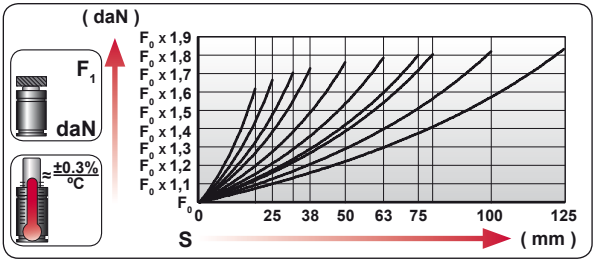


| | |
|---|---|
| ENG | ORDER |
| DEU | BESTELLUNG |
| FRA | COMMANDE |
| ITA | ORDINE |
| ESP | PEDIDO |
| POR | PEDIDO |

$F_0$ daN — S mm

CW 9500 50

CW 9500 050

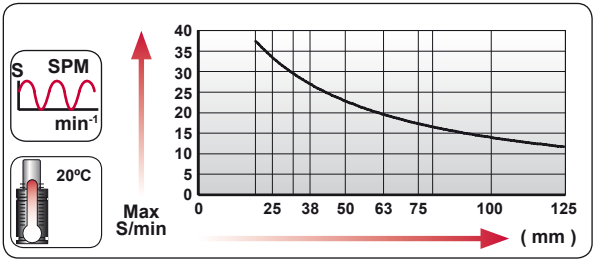


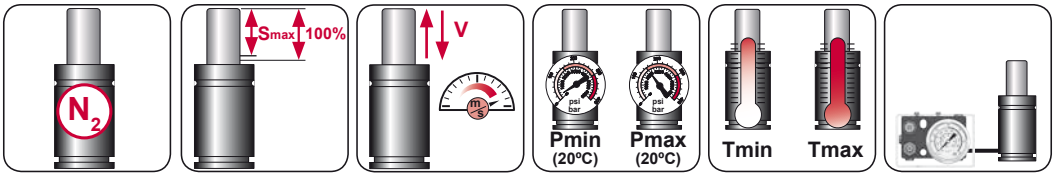


| $N_2$ | Smax < 90% | Vmax 1,6 m/s | bar psi 20 290 | bar psi 150 2175 | ºC ºF 0 32 | ºC ºF 80 176 | 600 CP- |
|---|---|---|---|---|---|---|---|

AZOL GAS

# CW 9500 MOUNTS

*Compact Height*

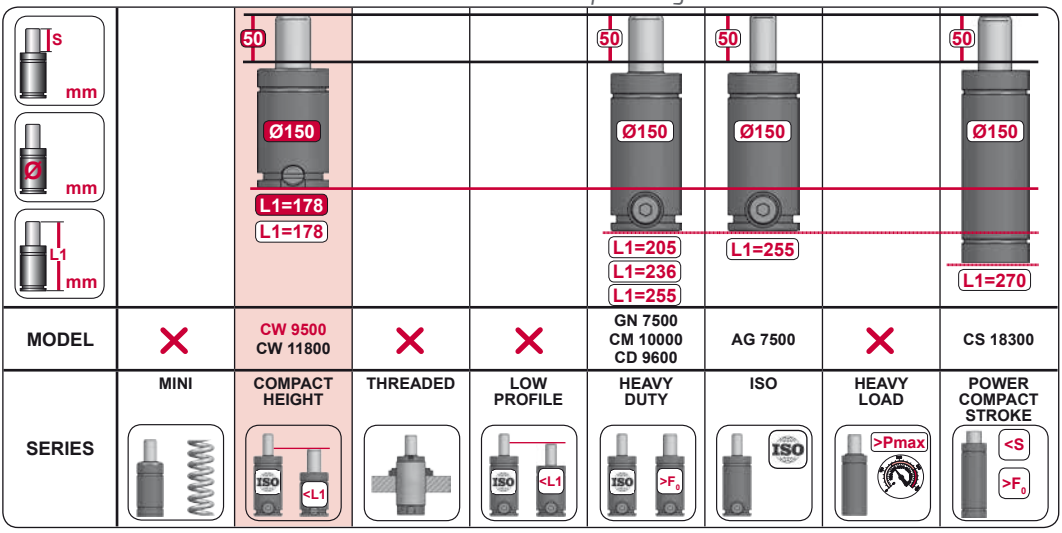


| MODEL | | CW 9500 CW 11800 | | | GN 7500 CM 10000 CD 9600 | AG 7500 | | CS 18300 |
|---|---|---|---|---|---|---|---|---|
| SERIES | MINI | COMPACT HEIGHT | THREADED | LOW PROFILE | HEAVY DUTY | ISO | HEAVY LOAD | POWER COMPACT STROKE |

## A14-150

E24.54.815.G
EM24.54.700/F

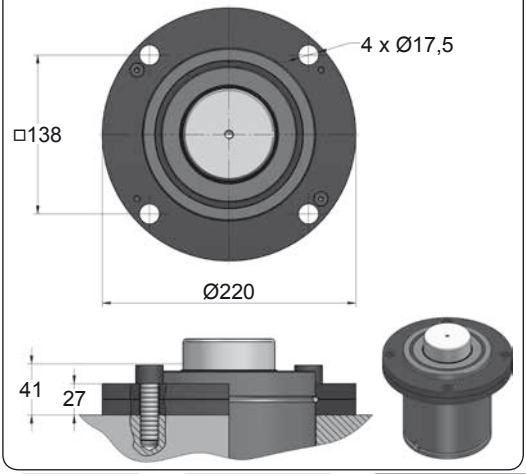


## A34-150

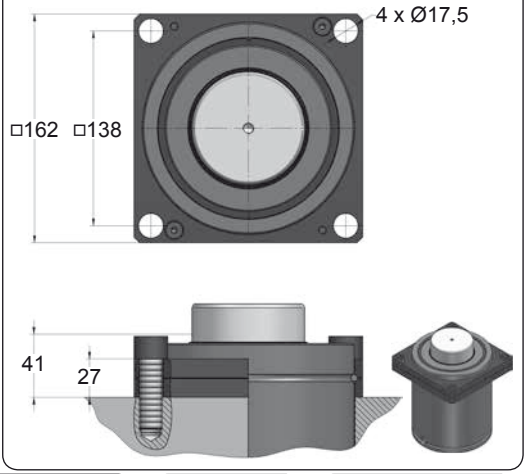





| CODE | | CW 9500 050 | KIT XXXXXXX-S KIT XXXXXXX-C | A14-150 | 18 GA 5 |
|---|---|---|---|---|---|
| ENG | ORDER | GAS SPRING | REPAIR KIT | FLANGE | CHARGING ADAPTER |
| DEU | BESTELLUNG | GASDRUCKFEDER | ERSATZTEILSATZ | FLANSCHE | LADEADAPTER |
| FRA | COMMANDE | RESSORT À GAZ | KIT DE RÉPARATION | BRIDE | RACCORD DE CHARGE |
| ITA | ORDINE | CILINDRO AD AZOTO | KIT DI MANUTENZIONE | FLANGE | ADATTATORE DI CARICO |
| ESP | PEDIDO | RESORTE DE GAS | KIT DE REPARACION | BRIDA | ADAPTADOR DE CARGA |
| POR | PEDIDO | CILINDRO DE GÁS | KIT DE MANUTENÇÃO | FLANGE | ADAPTADOR DE CARGA |

# CW 9500 MOUNTS

*Compact Height*

AZOL GAS

## B36-150

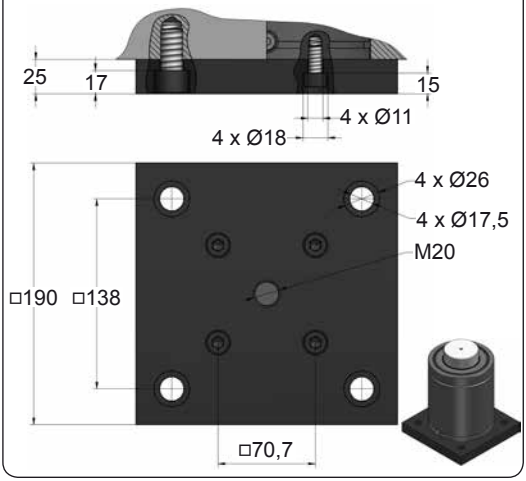


## B41-150

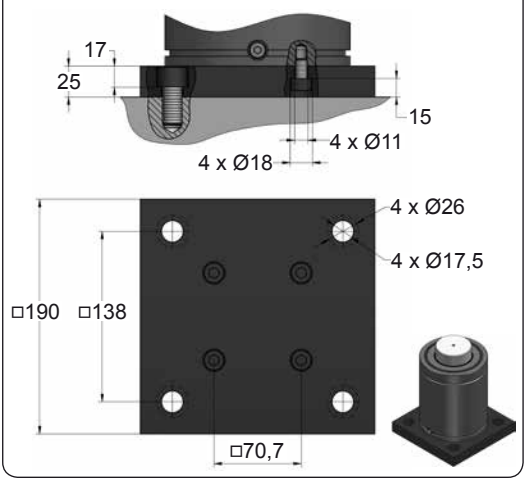


## C05-150

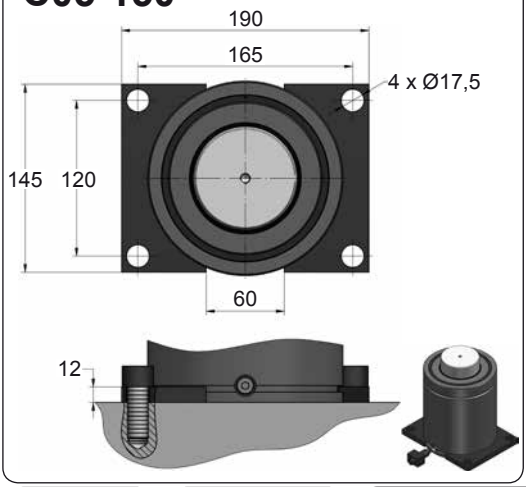


## C20-150

E24.54.815.G
EM24.54.700/F

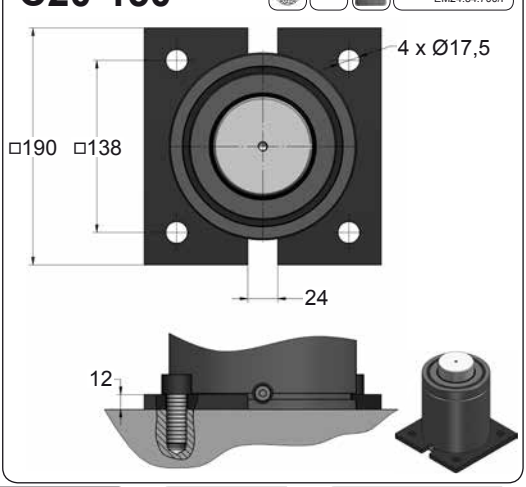









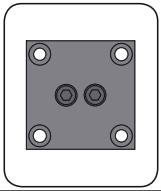

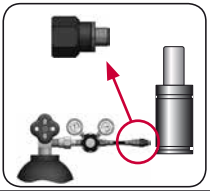

| CODE | | CW 9500 050 | KIT XXXXXXX-S<br>KIT XXXXXXX-C | B36-150 | 18 GA 5 |
|---|---|---|---|---|---|
| ENG | ORDER | GAS SPRING | REPAIR KIT | FLANGE | CHARGING ADAPTER |
| DEU | BESTELLUNG | GASDRUCKFEDER | ERSATZTEILSATZ | FLANSCHE | LADEADAPTER |
| FRA | COMMANDE | RESSORT À GAZ | KIT DE RÉPARATION | BRIDE | RACCORD DE CHARGE |
| ITA | ORDINE | CILINDRO AD AZOTO | KIT DI MANUTENZIONE | FLANGE | ADATTATORE DI CARICO |
| ESP | PEDIDO | RESORTE DE GAS | KIT DE REPARACION | BRIDA | ADAPTADOR DE CARGA |
| POR | PEDIDO | CILINDRO DE GÁS | KIT DE MANUTENÇÃO | FLANGE | ADAPTADOR DE CARGA |

AZOL GAS

# CW 9500 MOUNTS

*Compact Height*

## D02-150

ISO E24.54.815.G

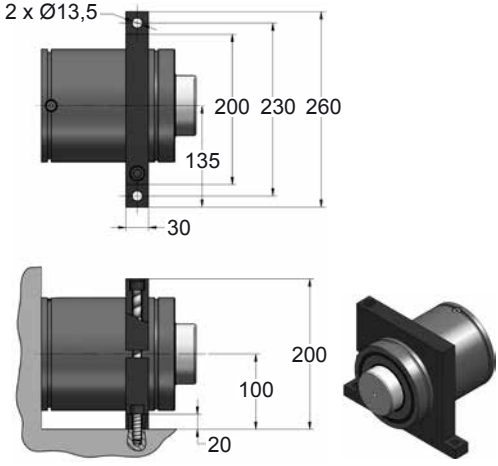


## D67-150

VDI

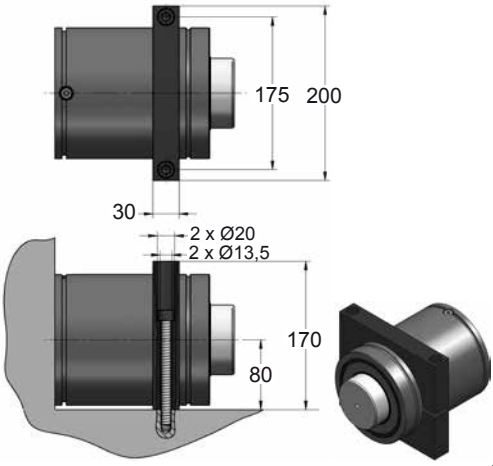









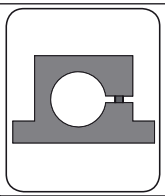

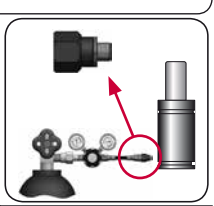

| CODE | | CW 9500 050 | KIT XXXXXXX-S<br>KIT XXXXXXX-C | D02-150 | 18 GA 5 |
|---|---|---|---|---|---|
| ENG | ORDER | GAS SPRING | REPAIR KIT | FLANGE | CHARGING ADAPTER |
| DEU | BESTELLUNG | GASDRUCKFEDER | ERSATZTEILSATZ | FLANSCHE | LADEADAPTER |
| FRA | COMMANDE | RESSORT À GAZ | KIT DE RÉPARATION | BRIDE | RACCORD DE CHARGE |
| ITA | ORDINE | CILINDRO AD AZOTO | KIT DI MANUTENZIONE | FLANGE | ADATTATORE DI CARICO |
| ESP | PEDIDO | RESORTE DE GAS | KIT DE REPARACION | BRIDA | ADAPTADOR DE CARGA |
| POR | PEDIDO | CILINDRO DE GÁS | KIT DE MANUTENÇÃO | FLANGE | ADAPTADOR DE CARGA |

# CW 11800

*Compact Height*

AZOL GAS

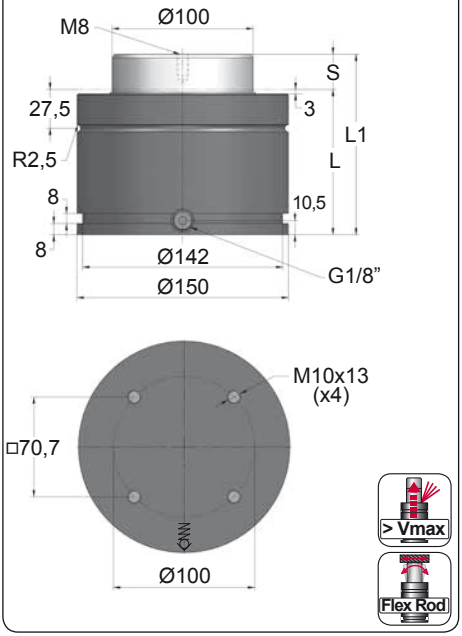


| ORDER | S (mm) | L1 ±0,25 (mm) | L (mm) | Kg. |
|---|---|---|---|---|
| CW 11800 019 | 19 | 116 | 97 | 10.90 |
| CW 11800 025 | 25 | 128 | 103 | 11.39 |
| CW 11800 032 | 32 | 142 | 110 | 11.96 |
| CW 11800 038 | 38 | 154 | 116 | 12.45 |
| CW 11800 050 | 50 | 178 | 128 | 13.44 |
| CW 11800 063 | 63 | 204 | 141 | 14.50 |
| CW 11800 075 | 75 | 228 | 153 | 15.48 |
| CW 11800 080 | 80 | 238 | 158 | 15.89 |
| CW 11800 100 | 100 | 278 | 178 | 17.53 |
| CW 11800 125 | 125 | 328 | 203 | 19.57 |

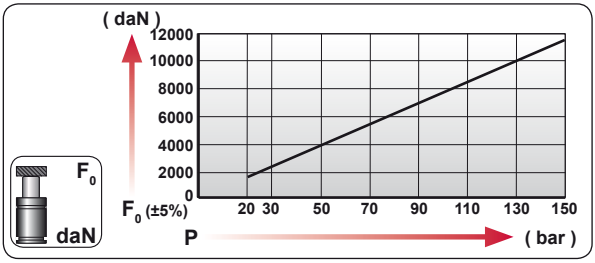


| CODE | bar | psi | $F_0$ daN | $F_1$ daN |
|---|---|---|---|---|
| CW 11800 050 | 150 | 2175 | 11780 | 22125 |
| CW-H 11800 050 | 0 | 0 | --- | --- |

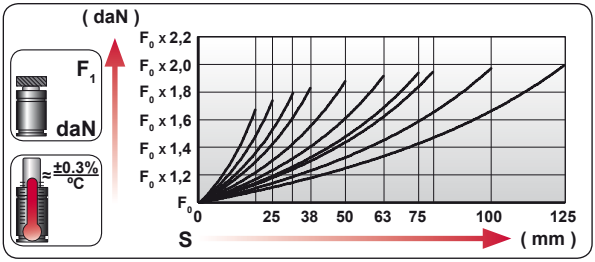


| | |
|---|---|
| ENG | ORDER |
| DEU | BESTELLUNG |
| FRA | COMMANDE |
| ITA | ORDINE |
| ESP | PEDIDO |
| POR | PEDIDO |

$F_0$ daN — S mm

CW 11800 50

CW 11800 050

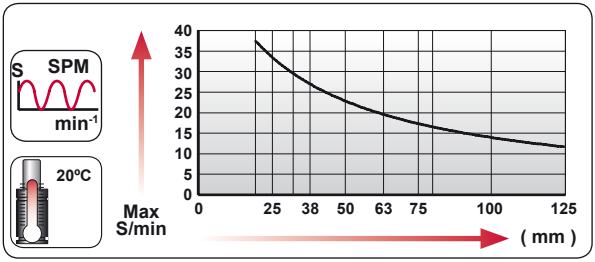


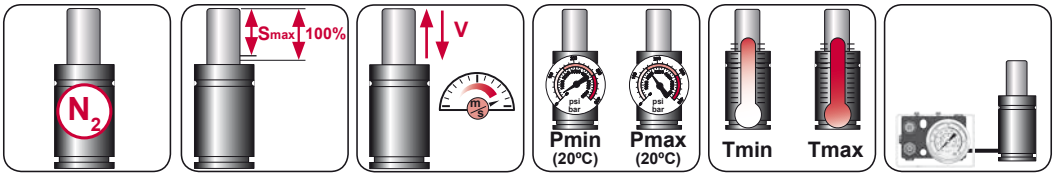


| $N_2$ | Smax < 90% | Vmax 1,6 m/s | bar psi 20 290 | bar psi 150 2175 | ºC ºF 0 32 | ºC ºF 80 176 | 600 CP- |
|---|---|---|---|---|---|---|---|

AZOL GAS

# CW 11800 MOUNTS

*Compact Height*

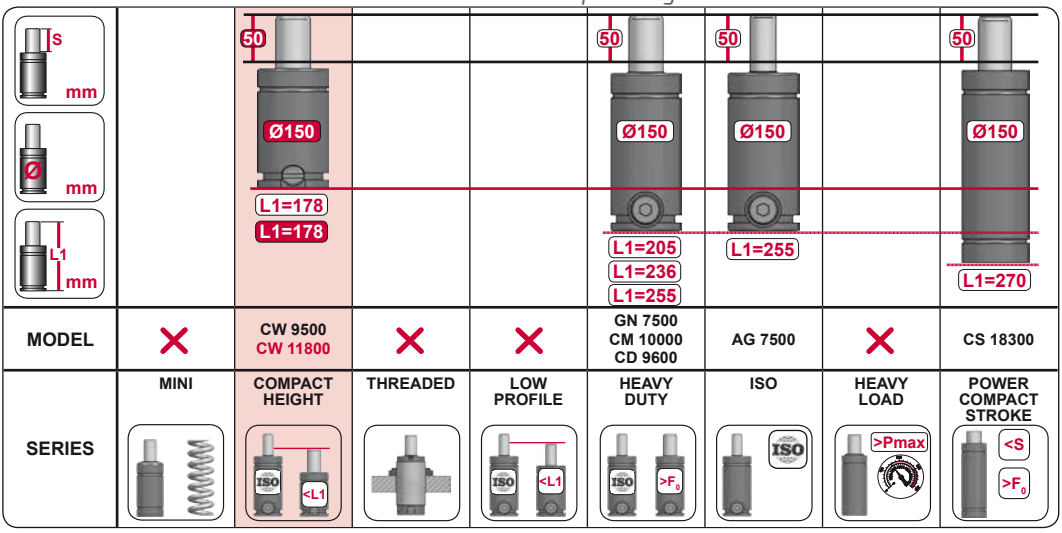


| MODEL | | CW 9500<br>CW 11800 | | | GN 7500<br>CM 10000<br>CD 9600 | AG 7500 | | CS 18300 |
|---|---|---|---|---|---|---|---|---|
| SERIES | MINI | COMPACT HEIGHT | THREADED | LOW PROFILE | HEAVY DUTY | ISO | HEAVY LOAD | POWER COMPACT STROKE |

## A14-150

ISO E24.54.815.G EM24.54.700/F

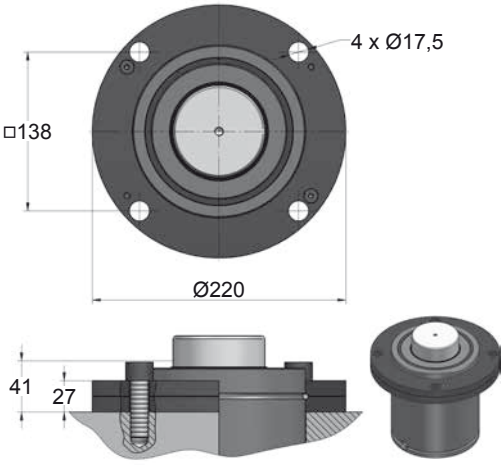


## A34-150

ISO VDI

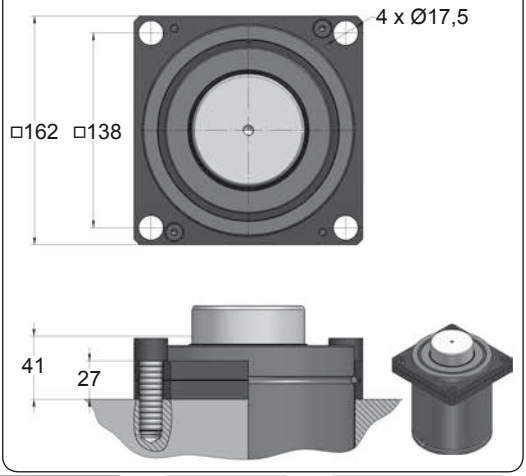









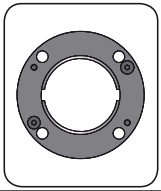

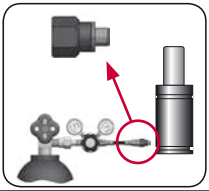

| CODE | | CW 11800 050 | KIT XXXXXXX-S<br>KIT XXXXXXX-C | A14-150 | 18 GA 5 |
|---|---|---|---|---|---|
| ENG | ORDER | GAS SPRING | REPAIR KIT | FLANGE | CHARGING ADAPTER |
| DEU | BESTELLUNG | GASDRUCKFEDER | ERSATZTEILSATZ | FLANSCHE | LADEADAPTER |
| FRA | COMMANDE | RESSORT À GAZ | KIT DE RÉPARATION | BRIDE | RACCORD DE CHARGE |
| ITA | ORDINE | CILINDRO AD AZOTO | KIT DI MANUTENZIONE | FLANGE | ADATTATORE DI CARICO |
| ESP | PEDIDO | RESORTE DE GAS | KIT DE REPARACION | BRIDA | ADAPTADOR DE CARGA |
| POR | PEDIDO | CILINDRO DE GÁS | KIT DE MANUTENÇÃO | FLANGE | ADAPTADOR DE CARGA |

# CW 11800 MOUNTS

*Compact Height*

AZOL GAS

## B36-150

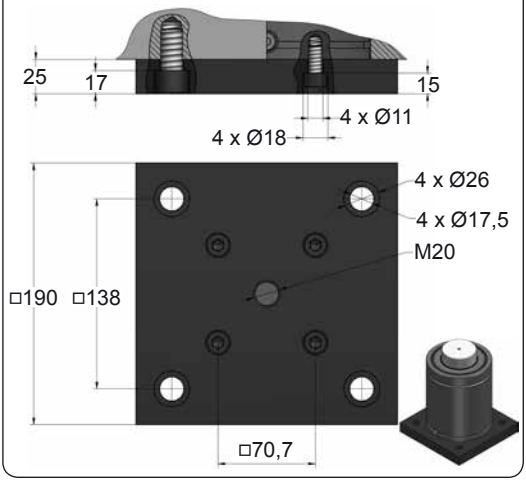


## B41-150

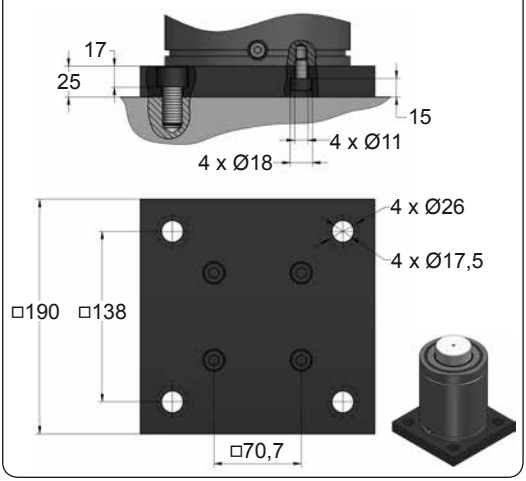


## C05-150

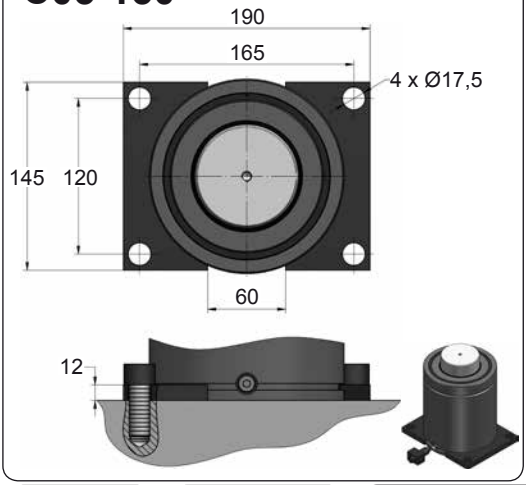


## C20-150

ISO · VDI · E24.54.815.G · EM24.54.700/F

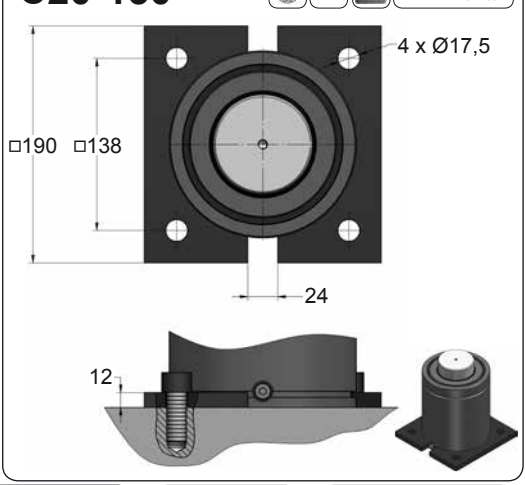









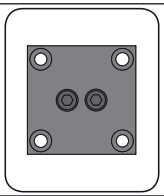

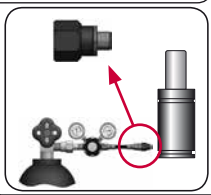

| CODE | | CW 11800 050 | KIT XXXXXXX-S<br>KIT XXXXXXX-C | B36-150 | 18 GA 5 |
|---|---|---|---|---|---|
| ENG | ORDER | GAS SPRING | REPAIR KIT | FLANGE | CHARGING ADAPTER |
| DEU | BESTELLUNG | GASDRUCKFEDER | ERSATZTEILSATZ | FLANSCHE | LADEADAPTER |
| FRA | COMMANDE | RESSORT À GAZ | KIT DE RÉPARATION | BRIDE | RACCORD DE CHARGE |
| ITA | ORDINE | CILINDRO AD AZOTO | KIT DI MANUTENZIONE | FLANGE | ADATTATORE DI CARICO |
| ESP | PEDIDO | RESORTE DE GAS | KIT DE REPARACION | BRIDA | ADAPTADOR DE CARGA |
| POR | PEDIDO | CILINDRO DE GÁS | KIT DE MANUTENÇÃO | FLANGE | ADAPTADOR DE CARGA |

AZOL GAS

# CW 11800 MOUNTS

*Compact Height*

## D02-150

ISO E24.54.815.G

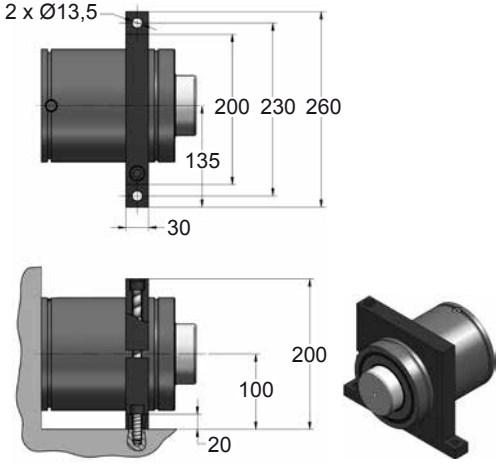


## D67-150

VDI

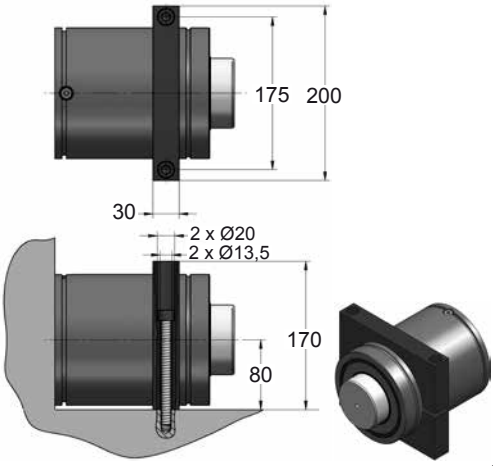









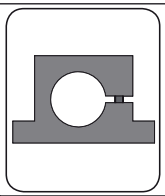

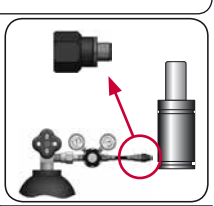

| CODE | | CW 11800 050 | KIT XXXXXXX-S<br>KIT XXXXXXX-C | D02-150 | 18 GA 5 |
|---|---|---|---|---|---|
| ENG | ORDER | GAS SPRING | REPAIR KIT | FLANGE | CHARGING ADAPTER |
| DEU | BESTELLUNG | GASDRUCKFEDER | ERSATZTEILSATZ | FLANSCHE | LADEADAPTER |
| FRA | COMMANDE | RESSORT À GAZ | KIT DE RÉPARATION | BRIDE | RACCORD DE CHARGE |
| ITA | ORDINE | CILINDRO AD AZOTO | KIT DI MANUTENZIONE | FLANGE | ADATTATORE DI CARICO |
| ESP | PEDIDO | RESORTE DE GAS | KIT DE REPARACION | BRIDA | ADAPTADOR DE CARGA |
| POR | PEDIDO | CILINDRO DE GÁS | KIT DE MANUTENÇÃO | FLANGE | ADAPTADOR DE CARGA |

# CW 20000

*Compact Height*

AZOL GAS

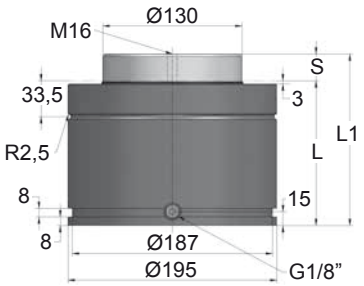


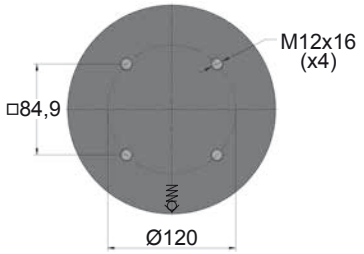





| ORDER | S (mm) | L1 ±0,25 (mm) | L (mm) | Kg. |
|---|---|---|---|---|
| CW 20000 019 | 19 | 148 | 129 | 24.54 |
| CW 20000 025 | 25 | 160 | 135 | 25.39 |
| CW 20000 032 | 32 | 174 | 142 | 26.38 |
| CW 20000 038 | 38 | 186 | 148 | 27.22 |
| CW 20000 050 | 50 | 210 | 160 | 28.92 |
| CW 20000 063 | 63 | 236 | 173 | 30.76 |
| CW 20000 075 | 75 | 260 | 185 | 32.45 |
| CW 20000 080 | 80 | 270 | 190 | 33.16 |
| CW 20000 100 | 100 | 310 | 210 | 35.99 |
| CW 20000 125 | 125 | 360 | 235 | 39.52 |

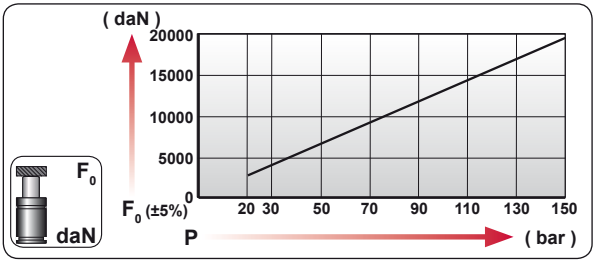


| CODE | bar | psi | F0 daN | F1 daN |
|---|---|---|---|---|
| CW 20000 050 | 150 | 2175 | 19910 | 35790 |
| CW-H 20000 050 | 0 | 0 | --- | --- |

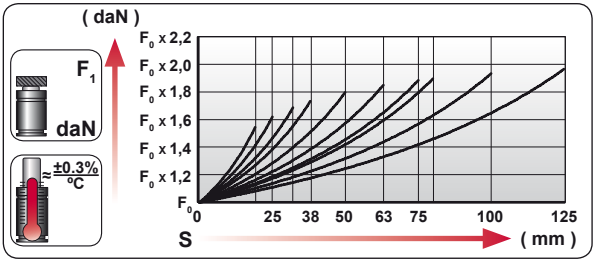


| | |
|---|---|
| ENG | ORDER |
| DEU | BESTELLUNG |
| FRA | COMMANDE |
| ITA | ORDINE |
| ESP | PEDIDO |
| POR | PEDIDO |

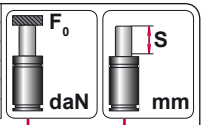


CW 20000 50

CW 20000 050

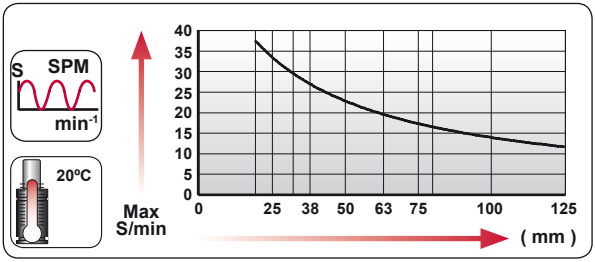


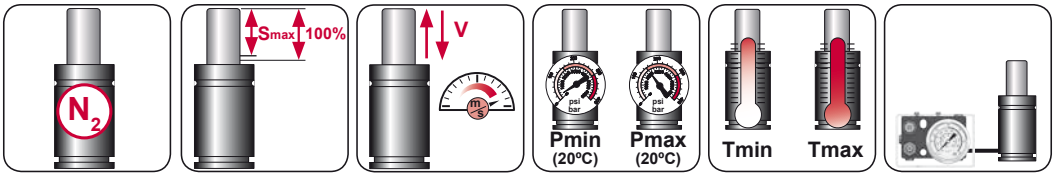


| $N_2$ | Smax < 90% | Vmax 1,6 m/s | bar psi 20 290 | bar psi 150 2175 | ºC ºF 0 32 | ºC ºF 80 176 | 600 CP- |
|---|---|---|---|---|---|---|---|

AZOL GAS

# CW 20000 MOUNTS

*Compact Height*

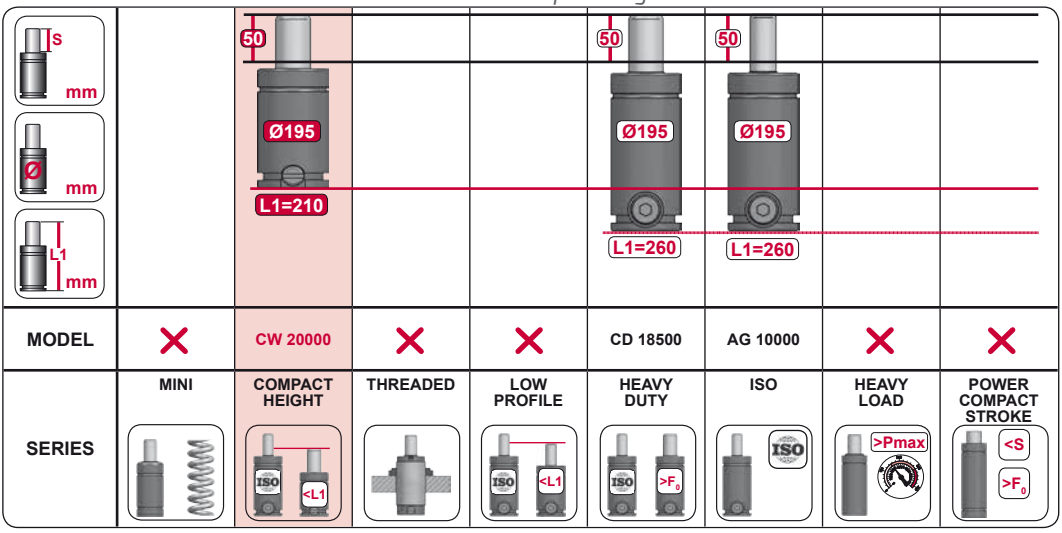


| MODEL | | CW 20000 | | | CD 18500 | AG 10000 | | |
|---|---|---|---|---|---|---|---|---|
| SERIES | MINI | COMPACT HEIGHT | THREADED | LOW PROFILE | HEAVY DUTY | ISO | HEAVY LOAD | POWER COMPACT STROKE |

## A14-195

ISO · EM24.54.700/F

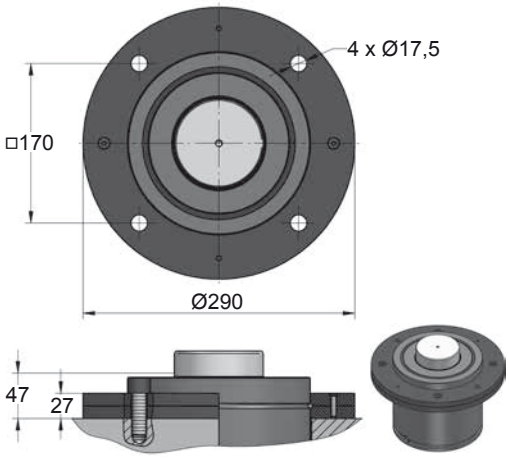


## A34-195

ISO · VDI

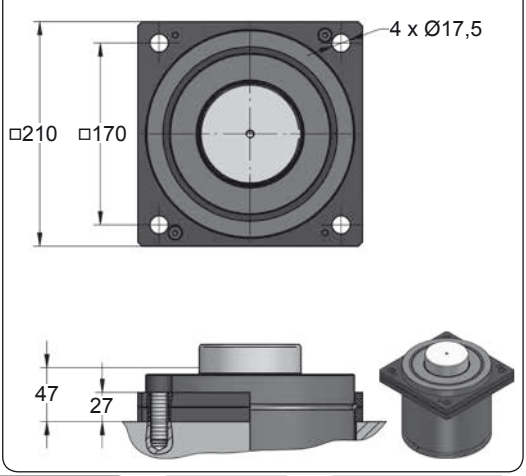









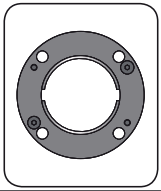

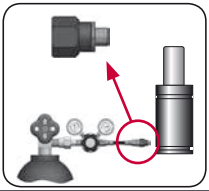

| CODE | | CW 20000 050 | KIT XXXXXXX-S<br>KIT XXXXXXX-C | A14-195 | 18 GA 5 |
|---|---|---|---|---|---|
| ENG | ORDER | GAS SPRING | REPAIR KIT | FLANGE | CHARGING ADAPTER |
| DEU | BESTELLUNG | GASDRUCKFEDER | ERSATZTEILSATZ | FLANSCHE | LADEADAPTER |
| FRA | COMMANDE | RESSORT À GAZ | KIT DE RÉPARATION | BRIDE | RACCORD DE CHARGE |
| ITA | ORDINE | CILINDRO AD AZOTO | KIT DI MANUTENZIONE | FLANGE | ADATTATORE DI CARICO |
| ESP | PEDIDO | RESORTE DE GAS | KIT DE REPARACION | BRIDA | ADAPTADOR DE CARGA |
| POR | PEDIDO | CILINDRO DE GÁS | KIT DE MANUTENÇÃO | FLANGE | ADAPTADOR DE CARGA |

# CW 20000 MOUNTS

*Compact Height*

AZOL GAS

## B36-195

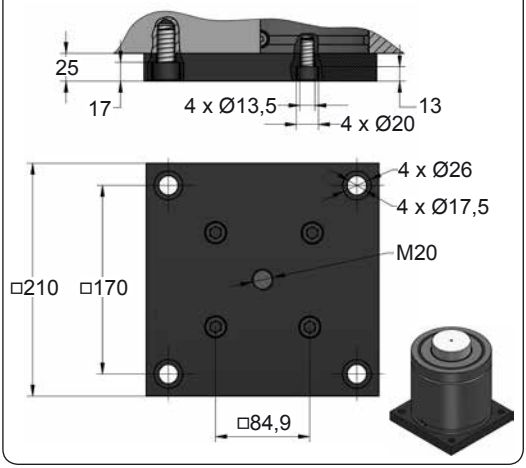


## B41-195

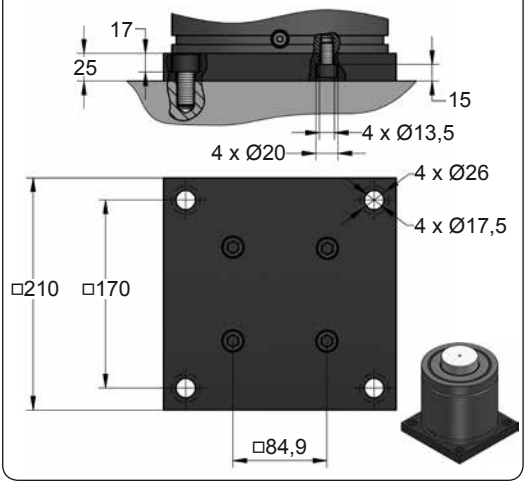


## C05-195

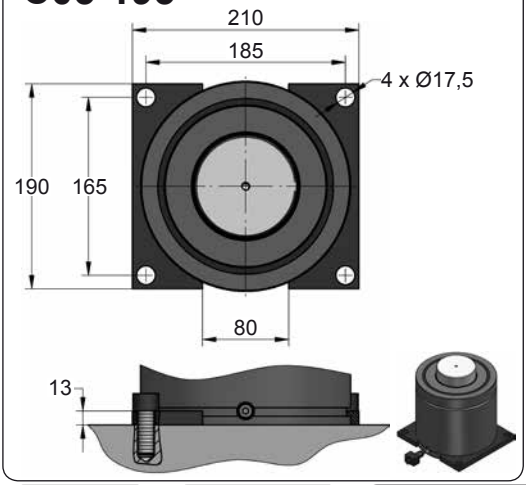


## C20-195

ISO VDI EM24.54.700/F

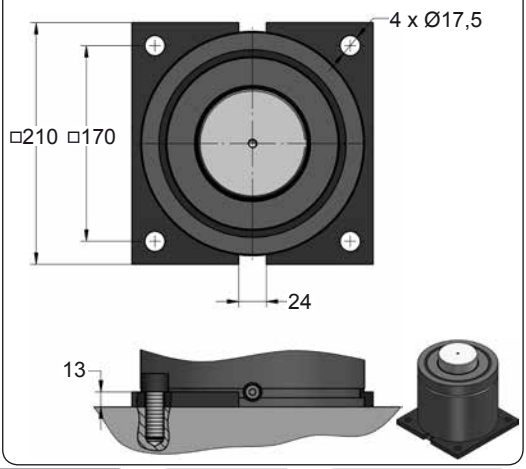









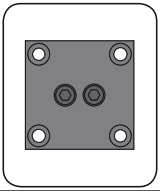

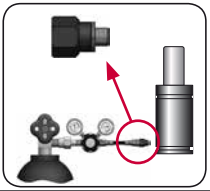

| CODE | | CW 20000 050 | KIT XXXXXXX-S<br>KIT XXXXXXX-C | B36-195 | 18 GA 5 |
|---|---|---|---|---|---|
| ENG | ORDER | GAS SPRING | REPAIR KIT | FLANGE | CHARGING ADAPTER |
| DEU | BESTELLUNG | GASDRUCKFEDER | ERSATZTEILSATZ | FLANSCHE | LADEADAPTER |
| FRA | COMMANDE | RESSORT À GAZ | KIT DE RÉPARATION | BRIDE | RACCORD DE CHARGE |
| ITA | ORDINE | CILINDRO AD AZOTO | KIT DI MANUTENZIONE | FLANGE | ADATTATORE DI CARICO |
| ESP | PEDIDO | RESORTE DE GAS | KIT DE REPARACION | BRIDA | ADAPTADOR DE CARGA |
| POR | PEDIDO | CILINDRO DE GÁS | KIT DE MANUTENÇÃO | FLANGE | ADAPTADOR DE CARGA |

AZOL GAS

# CW 20000 MOUNTS

*Compact Height*

## D02-195

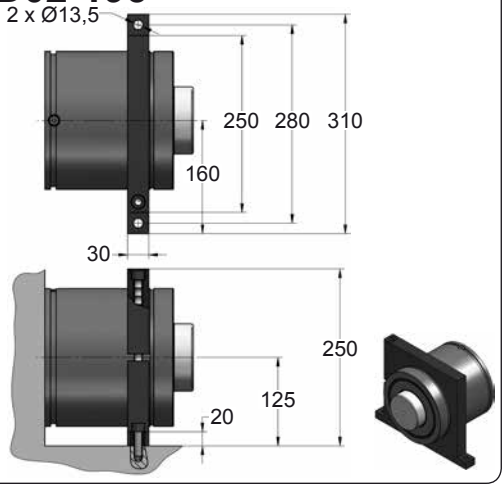









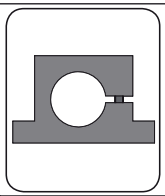

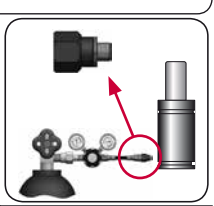

| CODE | | CW 20000 050 | KIT XXXXXXX-S<br>KIT XXXXXXX-C | D02-195 | 18 GA 5 |
|---|---|---|---|---|---|
| ENG | ORDER | GAS SPRING | REPAIR KIT | FLANGE | CHARGING ADAPTER |
| DEU | BESTELLUNG | GASDRUCKFEDER | ERSATZTEILSATZ | FLANSCHE | LADEADAPTER |
| FRA | COMMANDE | RESSORT À GAZ | KIT DE RÉPARATION | BRIDE | RACCORD DE CHARGE |
| ITA | ORDINE | CILINDRO AD AZOTO | KIT DI MANUTENZIONE | FLANGE | ADATTATORE DI CARICO |
| ESP | PEDIDO | RESORTE DE GAS | KIT DE REPARACION | BRIDA | ADAPTADOR DE CARGA |
| POR | PEDIDO | CILINDRO DE GÁS | KIT DE MANUTENÇÃO | FLANGE | ADAPTADOR DE CARGA |

AZOL GAS

# CR COMPACT HEIGHT SMALL

| MODEL | $F_0$ | Ø | S | L1 | Pmax | Charge Port | | |
|---|---|---|---|---|---|---|---|---|
| CR 1000 | 1000 | Ø50 | 10 - 80 | 51 - 191 | 150 | M6 | ✗ | ✓ |
| CR 1500 | 1500 | Ø63 | 10 - 100 | 55 - 235 | 150 | M6 | ✓ | ✓ |
| CR 2400 | 2400 | Ø75 | 10 - 100 | 57 - 237 | 150 | M6 | ✓ | ✓ |

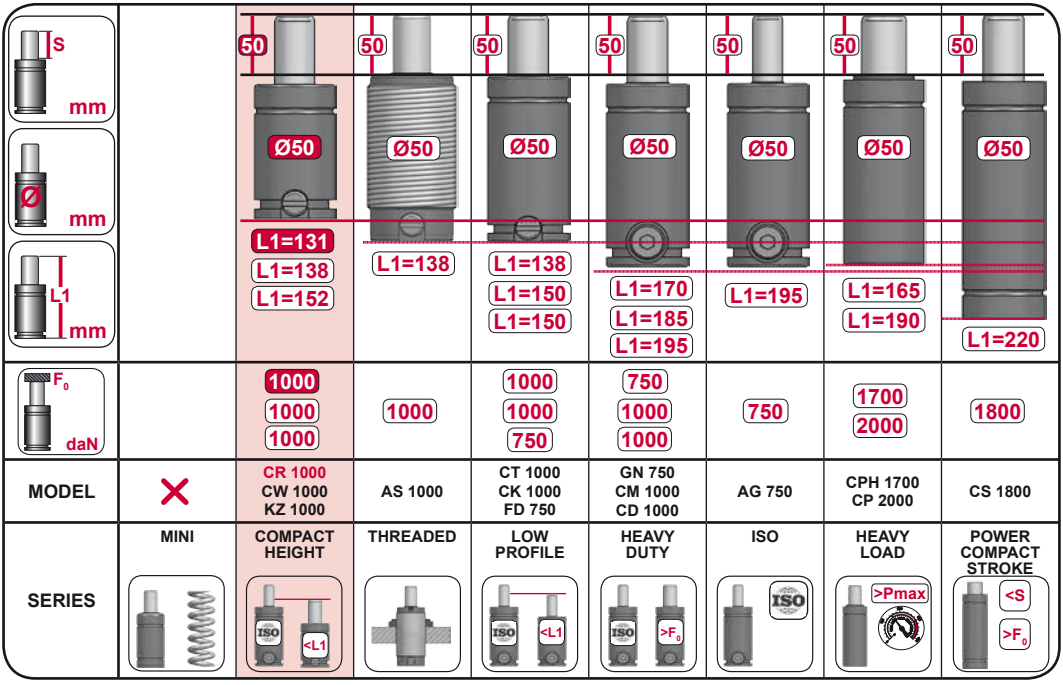

# CR 1000

*Compact Height*

AZOL GAS

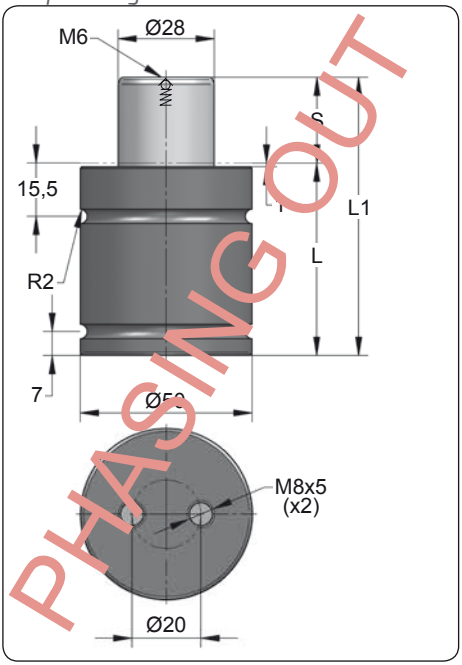


| ORDER | S (mm) | L1 ±0,25 (mm) | L (mm) | Kg. |
|---|---|---|---|---|
| CR 1000 010 | 10 | 51 | 41 | 0.51 |
| CR 1000 013 | 13 | 57 | 44 | 0.54 |
| CR 1000 019 | 19 | 69 | 50 | 0.60 |
| CR 1000 025 | 25 | 81 | 56 | 0.66 |
| CR 1000 038 | 38 | 107 | 69 | 0.78 |
| CR 1000 050 | 50 | 131 | 81 | 0.89 |
| CR 1000 063 | 63 | 157 | 94 | 1.02 |
| CR 1000 080 | 80 | 191 | 111 | 1.18 |

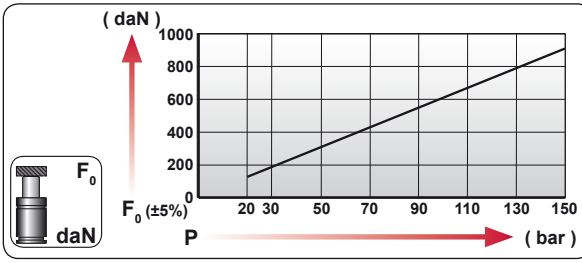


| CODE | bar | psi | F0 daN | F1 daN |
|---|---|---|---|---|
| CR 1000 050 | 150 | 2175 | 920 | 1730 |
| --------- | --- | --- | --- | --- |

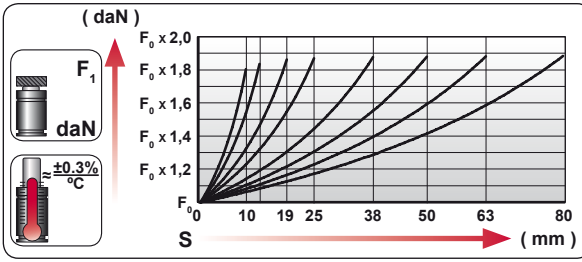


| | |
|---|---|
| ENG | ORDER |
| DEU | BESTELLUNG |
| FRA | COMMANDE |
| ITA | ORDINE |
| ESP | PEDIDO |
| POR | PEDIDO |

F0 daN — S mm

CR 1000 50

CR 1000 050

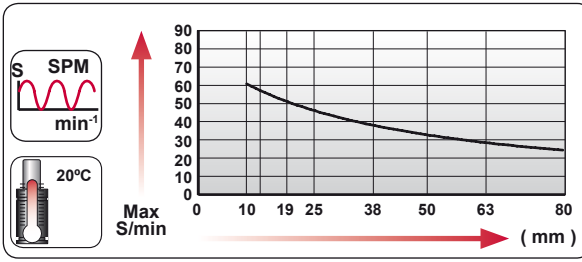


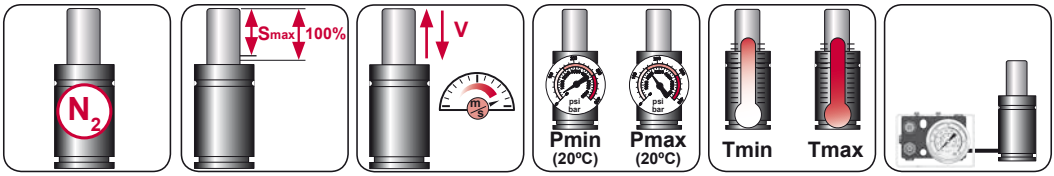


| $N_2$ | Smax < 90% | Vmax 1,6 m/s | bar psi 20 290 | bar psi 150 2175 | ºC ºF 0 32 | ºC ºF 80 176 |
|---|---|---|---|---|---|---|

AZOL GAS

# CR 1000 MOUNTS

*Compact Height*

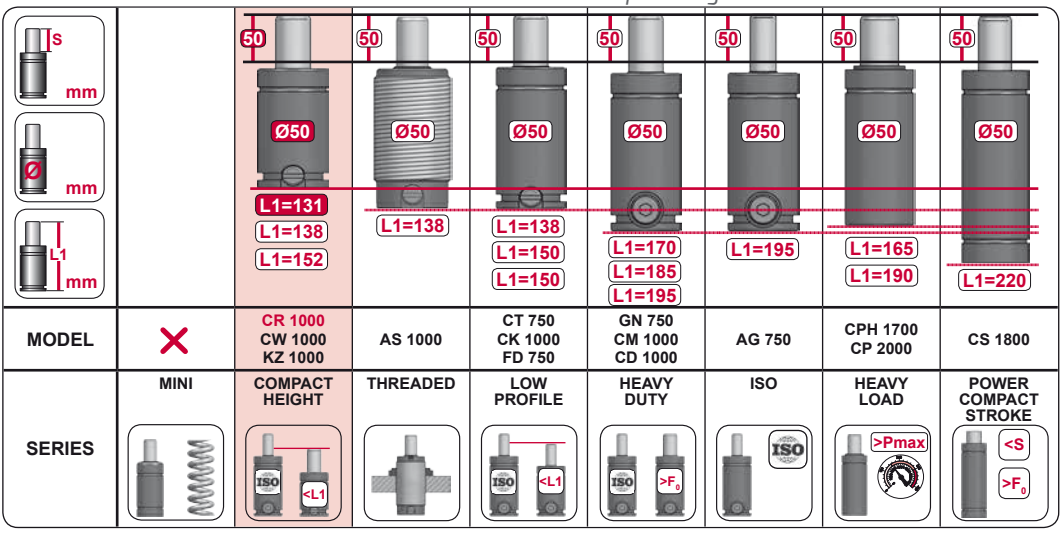


| MODEL | | CR 1000 CW 1000 KZ 1000 | AS 1000 | CT 750 CK 1000 FD 750 | GN 750 CM 1000 CD 1000 | AG 750 | CPH 1700 CP 2000 | CS 1800 |
|---|---|---|---|---|---|---|---|---|
| SERIES | MINI | COMPACT HEIGHT | THREADED | LOW PROFILE | HEAVY DUTY | ISO | HEAVY LOAD | POWER COMPACT STROKE |

## A14-050

E24.54.815.G
EM24.54.700/F

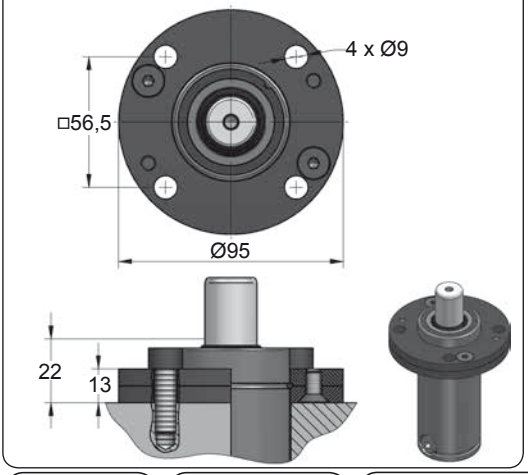


## A34-050

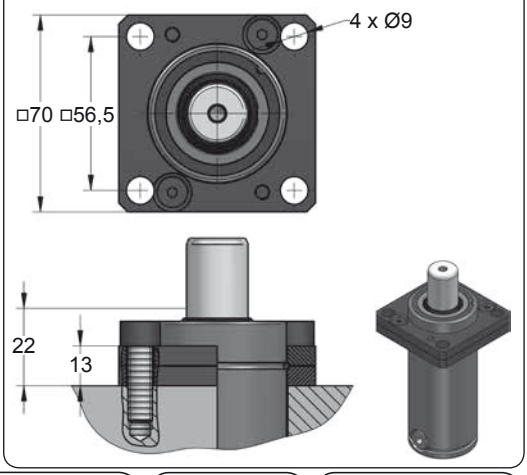





| CODE | | CR 1000 050 | KIT XXXXXXX-S KIT XXXXXXX-C | A14-050 | 06 GA 11 |
|---|---|---|---|---|---|
| ENG | ORDER | GAS SPRING | REPAIR KIT | FLANGE | CHARGING ADAPTER |
| DEU | BESTELLUNG | GASDRUCKFEDER | ERSATZTEILSATZ | FLANSCHE | LADEADAPTER |
| FRA | COMMANDE | RESSORT À GAZ | KIT DE RÉPARATION | BRIDE | RACCORD DE CHARGE |
| ITA | ORDINE | CILINDRO AD AZOTO | KIT DI MANUTENZIONE | FLANGE | ADATTATORE DI CARICO |
| ESP | PEDIDO | RESORTE DE GAS | KIT DE REPARACION | BRIDA | ADAPTADOR DE CARGA |
| POR | PEDIDO | CILINDRO DE GÁS | KIT DE MANUTENÇÃO | FLANGE | ADAPTADOR DE CARGA |

# CR 1000 MOUNTS

*Compact Height*

AZOL GAS

## B36-050

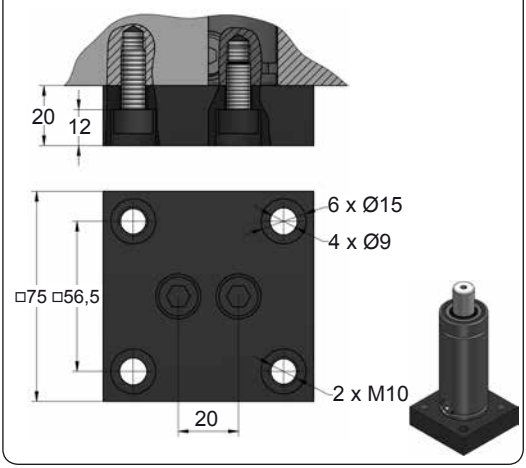


## B41-050

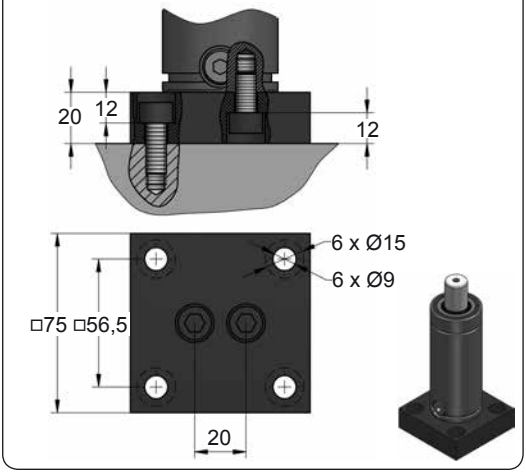


## D02-050

ISO E24.54.815.G EM24.54.700/F

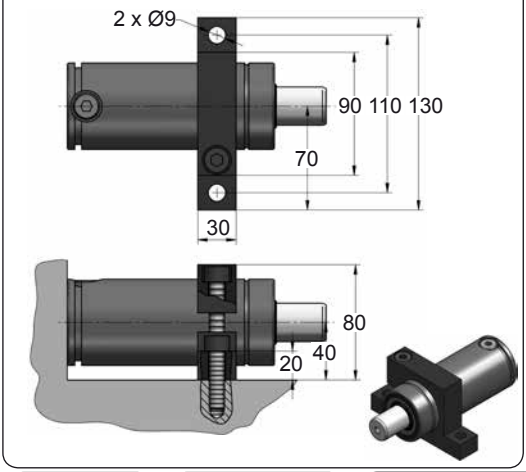


## D67-050

VDI

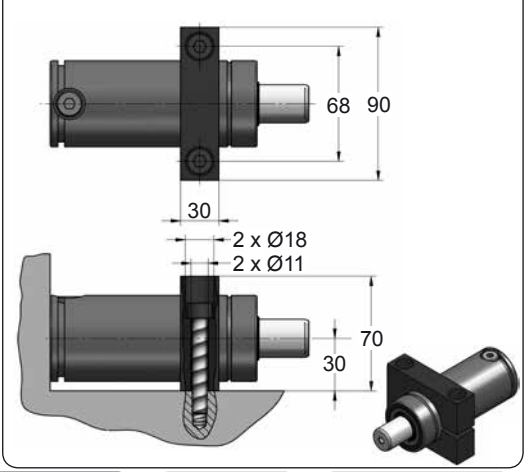









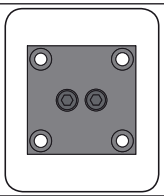

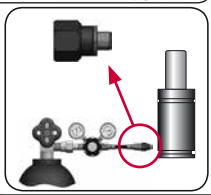

| CODE | | CR 1000 050 | KIT XXXXXXX-S<br>KIT XXXXXXX-C | B36-050 | 06 GA 11 |
|---|---|---|---|---|---|
| ENG | ORDER | GAS SPRING | REPAIR KIT | FLANGE | CHARGING ADAPTER |
| DEU | BESTELLUNG | GASDRUCKFEDER | ERSATZTEILSATZ | FLANSCHE | LADEADAPTER |
| FRA | COMMANDE | RESSORT À GAZ | KIT DE RÉPARATION | BRIDE | RACCORD DE CHARGE |
| ITA | ORDINE | CILINDRO AD AZOTO | KIT DI MANUTENZIONE | FLANGE | ADATTATORE DI CARICO |
| ESP | PEDIDO | RESORTE DE GAS | KIT DE REPARACION | BRIDA | ADAPTADOR DE CARGA |
| POR | PEDIDO | CILINDRO DE GÁS | KIT DE MANUTENÇÃO | FLANGE | ADAPTADOR DE CARGA |

AZOL GAS

# CR 1000 MOUNTS

*Compact Height*








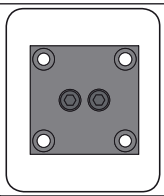

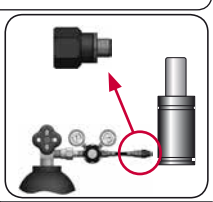

| CODE | | CR 1000 050 | KIT XXXXXXX-S<br>KIT XXXXXXX-C | B36-050 | 06 GA 11 |
|---|---|---|---|---|---|
| ENG | ORDER | GAS SPRING | REPAIR KIT | FLANGE | CHARGING ADAPTER |
| DEU | BESTELLUNG | GASDRUCKFEDER | ERSATZTEILSATZ | FLANSCHE | LADEADAPTER |
| FRA | COMMANDE | RESSORT À GAZ | KIT DE RÉPARATION | BRIDE | RACCORD DE CHARGE |
| ITA | ORDINE | CILINDRO AD AZOTO | KIT DI MANUTENZIONE | FLANGE | ADATTATORE DI CARICO |
| ESP | PEDIDO | RESORTE DE GAS | KIT DE REPARACION | BRIDA | ADAPTADOR DE CARGA |
| POR | PEDIDO | CILINDRO DE GÁS | KIT DE MANUTENÇÃO | FLANGE | ADAPTADOR DE CARGA |

# CR 1500

*Compact Height*

AZOL GAS

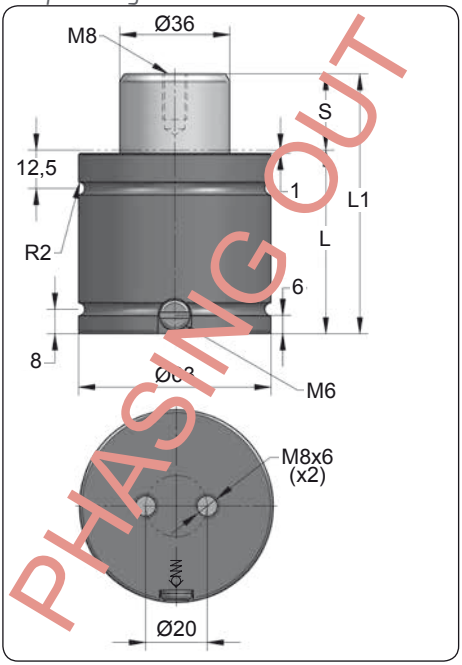


| ORDER | S (mm) | L1 ±0,25 (mm) | L (mm) | Kg. |
|---|---|---|---|---|
| CR 1500 010 | 10 | 55 | 45 | 0.88 |
| CR 1500 025 | 25 | 85 | 60 | 1.09 |
| CR 1500 038 | 38 | 111 | 73 | 1.28 |
| CR 1500 050 | 50 | 135 | 85 | 1.46 |
| CR 1500 063 | 63 | 161 | 98 | 1.64 |
| CR 1500 080 | 80 | 195 | 115 | 1.89 |
| CR 1500 100 | 100 | 235 | 135 | 2.18 |

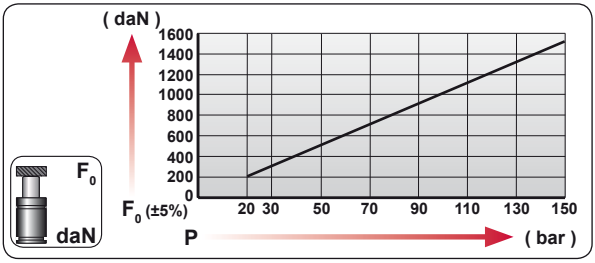


| CODE | bar | psi | F0 daN | F1 daN |
|---|---|---|---|---|
| CR 1500 050 | 150 | 2175 | 1530 | 2740 |
| CR-H 1500 050 | 0 | 0 | --- | --- |

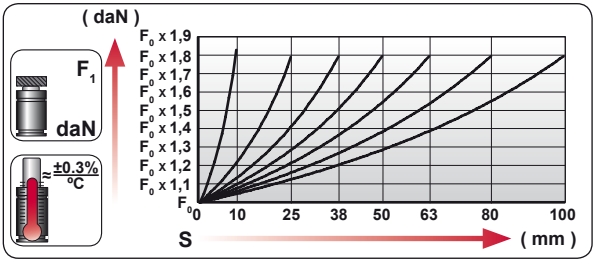


| | |
|---|---|
| ENG | ORDER |
| DEU | BESTELLUNG |
| FRA | COMMANDE |
| ITA | ORDINE |
| ESP | PEDIDO |
| POR | PEDIDO |

F0 daN — S mm

CR 1500 50

CR 1500 050

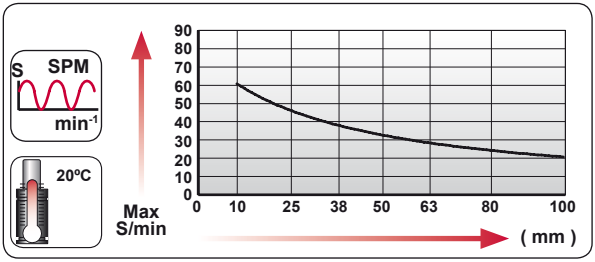


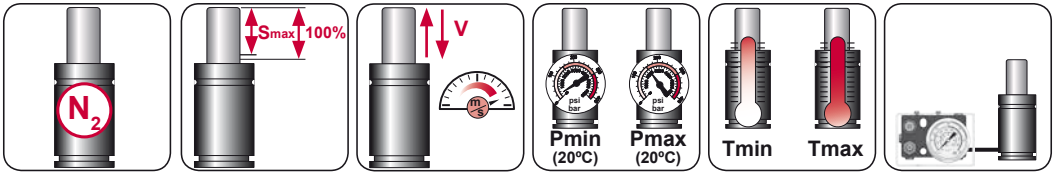


| $N_2$ | Smax < 90% | Vmax 1,6 m/s | bar psi 20 290 | bar psi 150 2175 | °C °F 0 32 | °C °F 80 176 | 600 CP- |
|---|---|---|---|---|---|---|---|

AZOL GAS

# CR 1500 MOUNTS

*Compact Height*

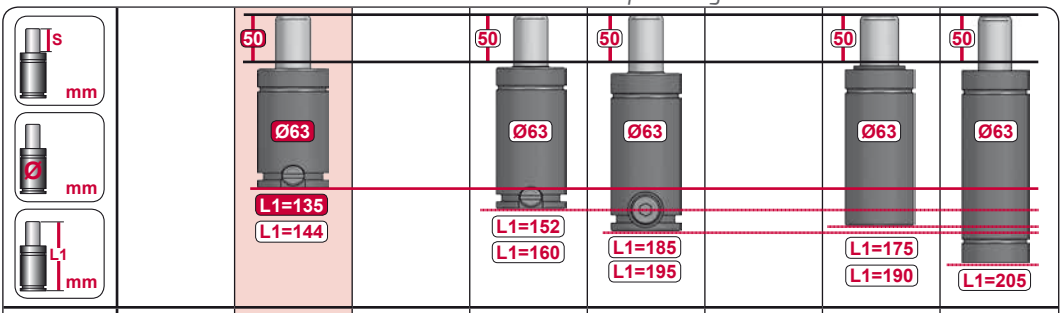


| MODEL | × | CR 1500 CW 1500 KZ 1500 | × | CT 1500 CK 1500 | CM 1500 CD 1500 | × | CPH 2800 CP 3000 | CS 3000 |
|---|---|---|---|---|---|---|---|---|
| SERIES | MINI | COMPACT HEIGHT | THREADED | LOW PROFILE | HEAVY DUTY | ISO | HEAVY LOAD | POWER COMPACT STROKE |

## A14-063

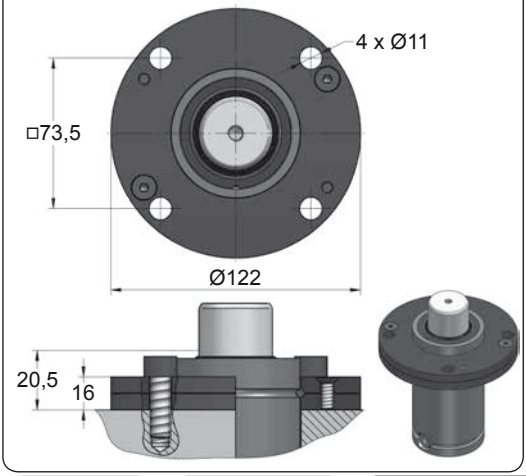


## A39-063

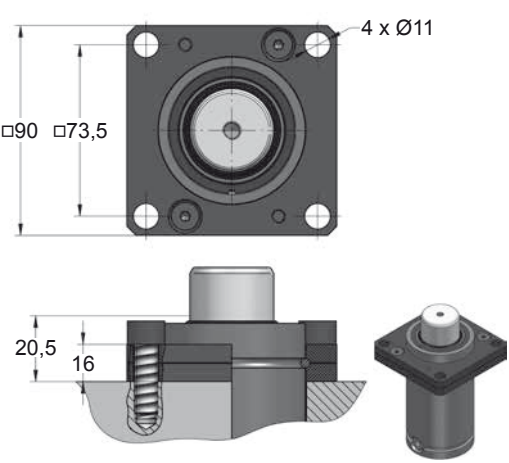




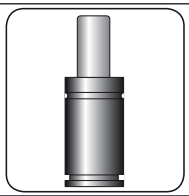




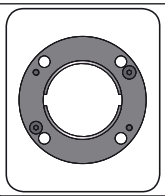

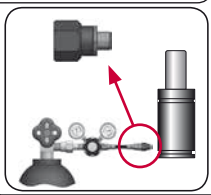

| CODE | | CR 1500 050 | KIT XXXXXXX-S KIT XXXXXXX-C | A14-063 | 06 GA 11 |
|---|---|---|---|---|---|
| ENG | ORDER | GAS SPRING | REPAIR KIT | FLANGE | CHARGING ADAPTER |
| DEU | BESTELLUNG | GASDRUCKFEDER | ERSATZTEILSATZ | FLANSCHE | LADEADAPTER |
| FRA | COMMANDE | RESSORT À GAZ | KIT DE RÉPARATION | BRIDE | RACCORD DE CHARGE |
| ITA | ORDINE | CILINDRO AD AZOTO | KIT DI MANUTENZIONE | FLANGE | ADATTATORE DI CARICO |
| ESP | PEDIDO | RESORTE DE GAS | KIT DE REPARACION | BRIDA | ADAPTADOR DE CARGA |
| POR | PEDIDO | CILINDRO DE GÁS | KIT DE MANUTENÇÃO | FLANGE | ADAPTADOR DE CARGA |

# CR 1500 MOUNTS

*Compact Height*

AZOL GAS

## A69-063

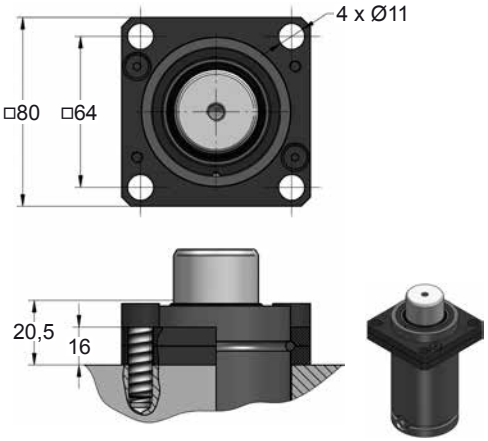


## B36-063

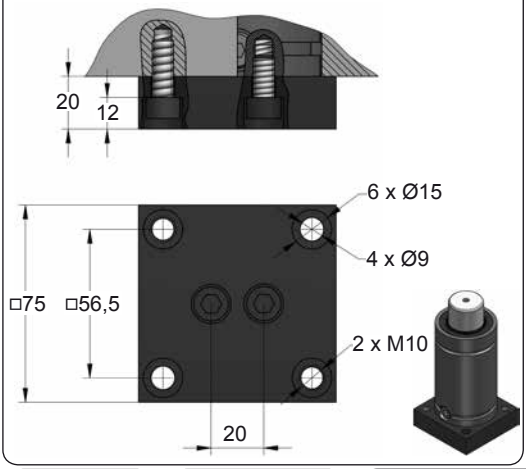


## B41-063

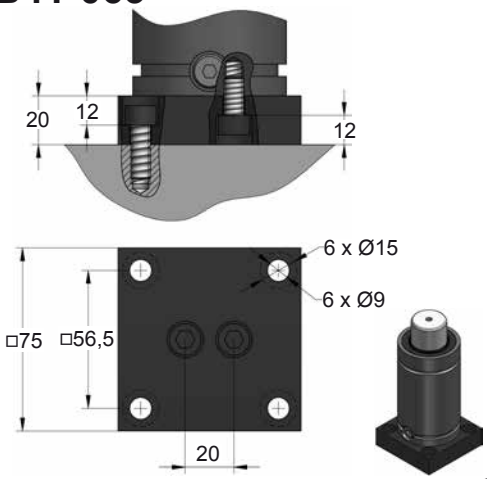









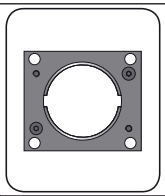

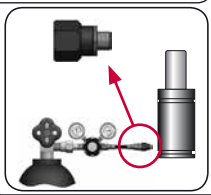

| CODE | | CR 1500 050 | KIT XXXXXXX-S<br>KIT XXXXXXX-C | A69-063 | 06 GA 11 |
|---|---|---|---|---|---|
| ENG | ORDER | GAS SPRING | REPAIR KIT | FLANGE | CHARGING ADAPTER |
| DEU | BESTELLUNG | GASDRUCKFEDER | ERSATZTEILSATZ | FLANSCHE | LADEADAPTER |
| FRA | COMMANDE | RESSORT À GAZ | KIT DE RÉPARATION | BRIDE | RACCORD DE CHARGE |
| ITA | ORDINE | CILINDRO AD AZOTO | KIT DI MANUTENZIONE | FLANGE | ADATTATORE DI CARICO |
| ESP | PEDIDO | RESORTE DE GAS | KIT DE REPARACION | BRIDA | ADAPTADOR DE CARGA |
| POR | PEDIDO | CILINDRO DE GÁS | KIT DE MANUTENÇÃO | FLANGE | ADAPTADOR DE CARGA |

AZOL GAS

# CR 1500 MOUNTS

*Compact Height*

## D02-063

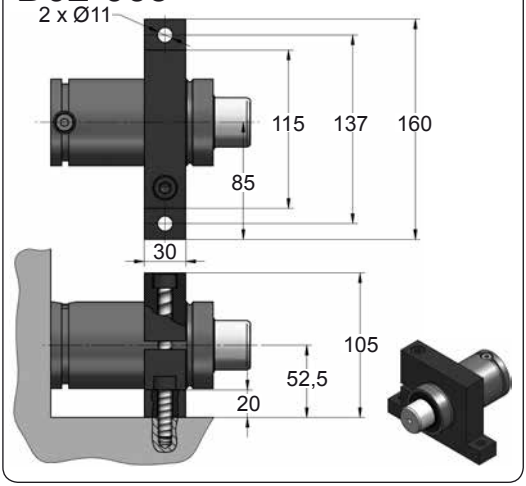


## D67-063

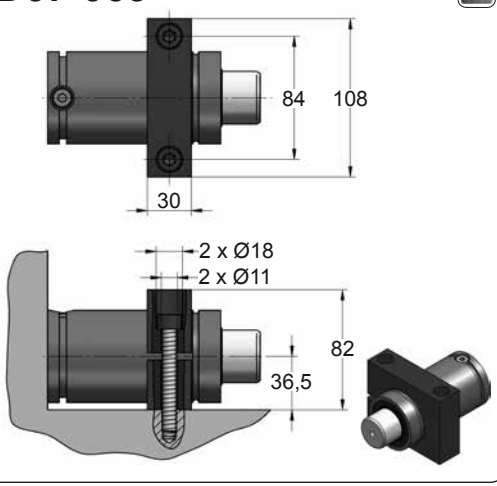









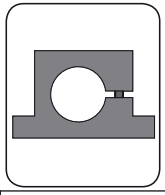

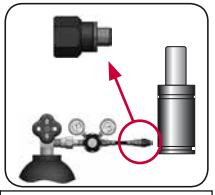

| CODE | | CR 1500 050 | KIT XXXXXXX-S<br>KIT XXXXXXX-C | D02-063 | 06 GA 11 |
|---|---|---|---|---|---|
| ENG | ORDER | GAS SPRING | REPAIR KIT | FLANGE | CHARGING ADAPTER |
| DEU | BESTELLUNG | GASDRUCKFEDER | ERSATZTEILSATZ | FLANSCHE | LADEADAPTER |
| FRA | COMMANDE | RESSORT À GAZ | KIT DE RÉPARATION | BRIDE | RACCORD DE CHARGE |
| ITA | ORDINE | CILINDRO AD AZOTO | KIT DI MANUTENZIONE | FLANGE | ADATTATORE DI CARICO |
| ESP | PEDIDO | RESORTE DE GAS | KIT DE REPARACION | BRIDA | ADAPTADOR DE CARGA |
| POR | PEDIDO | CILINDRO DE GÁS | KIT DE MANUTENÇÃO | FLANGE | ADAPTADOR DE CARGA |

# CR 2400

*Compact Height*

AZOL GAS

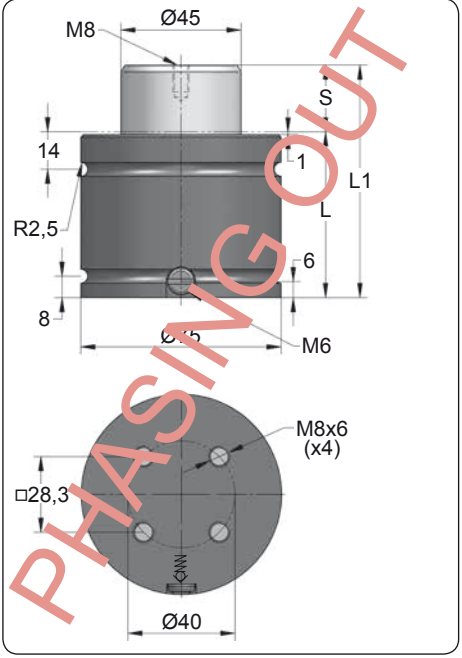


PHASING OUT

| ORDER | S (mm) | L1 ±0,25 (mm) | L (mm) | Kg. |
|---|---|---|---|---|
| CR 2400 010 | 10 | 57 | 47 | 1.30 |
| CR 2400 025 | 25 | 87 | 62 | 1.60 |
| CR 2400 038 | 38 | 113 | 75 | 1.85 |
| CR 2400 050 | 50 | 137 | 87 | 2.09 |
| CR 2400 063 | 63 | 163 | 100 | 2.34 |
| CR 2400 080 | 80 | 197 | 117 | 2.68 |
| CR 2400 100 | 100 | 237 | 137 | 3.07 |

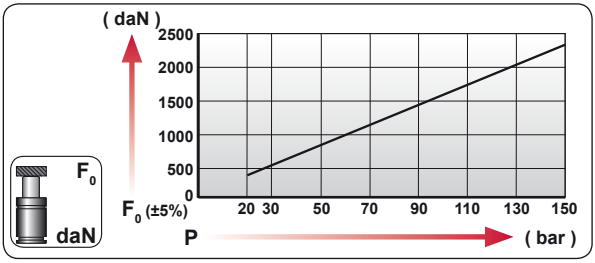


| CODE | bar | psi | F0 daN | F1 daN |
|---|---|---|---|---|
| CR 2400 050 | 150 | 2175 | 2385 | 4350 |
| CR-H 2400 050 | 0 | 0 | --- | --- |

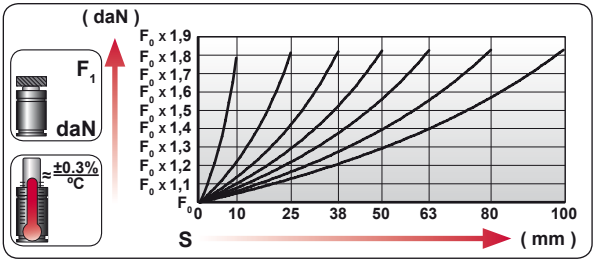


| | |
|---|---|
| ENG | ORDER |
| DEU | BESTELLUNG |
| FRA | COMMANDE |
| ITA | ORDINE |
| ESP | PEDIDO |
| POR | PEDIDO |




CR 2400 50

CR 2400 050

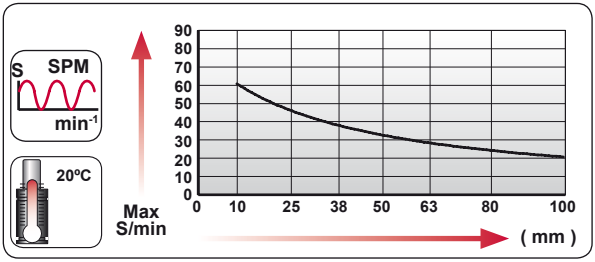


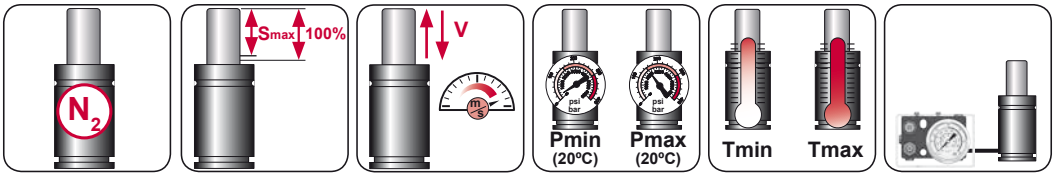


| $N_2$ | Smax < 90% | Vmax 1,6 m/s | bar psi 20 290 | bar psi 150 2175 | °C °F 0 32 | °C °F 80 176 | 600 CP- |
|---|---|---|---|---|---|---|---|

AZOL GAS

# CR 2400 MOUNTS

*Compact Height*

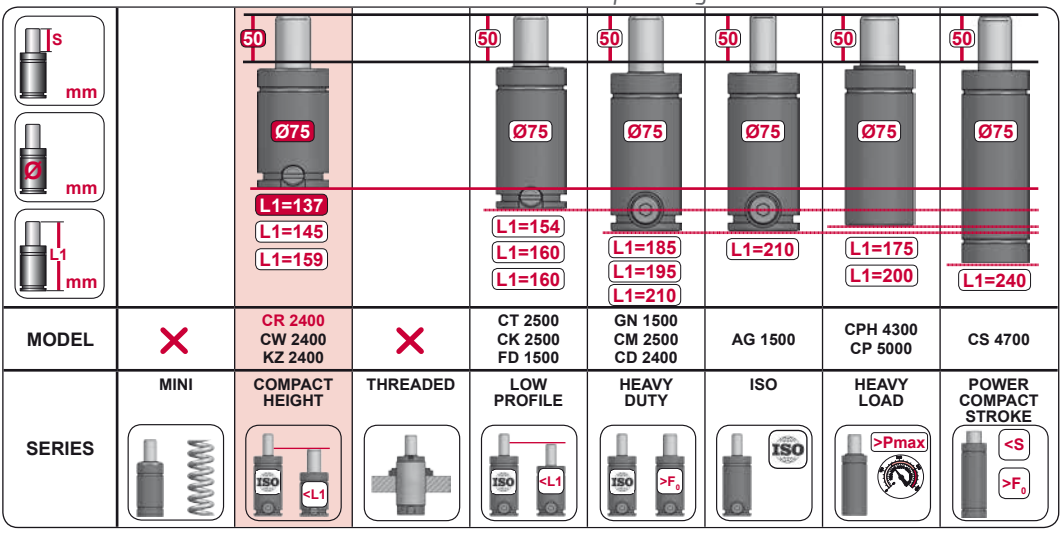


| MODEL | × | CR 2400<br>CW 2400<br>KZ 2400 | × | CT 2500<br>CK 2500<br>FD 1500 | GN 1500<br>CM 2500<br>CD 2400 | AG 1500 | CPH 4300<br>CP 5000 | CS 4700 |
|---|---|---|---|---|---|---|---|---|
| SERIES | MINI | COMPACT HEIGHT | THREADED | LOW PROFILE | HEAVY DUTY | ISO | HEAVY LOAD | POWER COMPACT STROKE |

## A14-075

E24.54.815.G
EM24.54.700/F

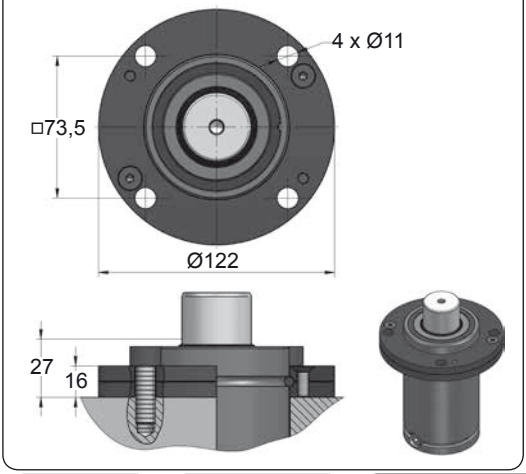


## A34-075

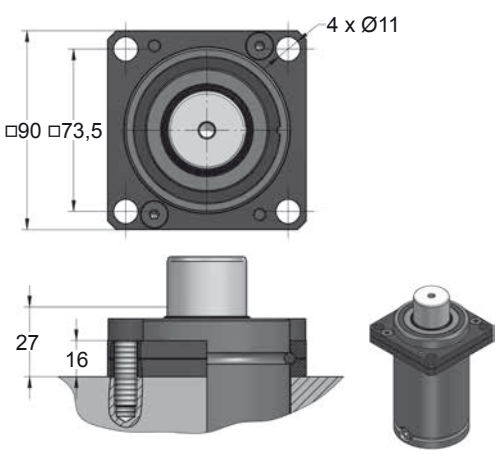





| CODE | | CR 2400 050 | KIT XXXXXXX-S<br>KIT XXXXXXX-C | A14-075 | 06 GA 11 |
|---|---|---|---|---|---|
| ENG | ORDER | GAS SPRING | REPAIR KIT | FLANGE | CHARGING ADAPTER |
| DEU | BESTELLUNG | GASDRUCKFEDER | ERSATZTEILSATZ | FLANSCHE | LADEADAPTER |
| FRA | COMMANDE | RESSORT À GAZ | KIT DE RÉPARATION | BRIDE | RACCORD DE CHARGE |
| ITA | ORDINE | CILINDRO AD AZOTO | KIT DI MANUTENZIONE | FLANGE | ADATTATORE DI CARICO |
| ESP | PEDIDO | RESORTE DE GAS | KIT DE REPARACION | BRIDA | ADAPTADOR DE CARGA |
| POR | PEDIDO | CILINDRO DE GÁS | KIT DE MANUTENÇÃO | FLANGE | ADAPTADOR DE CARGA |

# CR 2400 MOUNTS

*Compact Height*

AZOL GAS

## B36-075

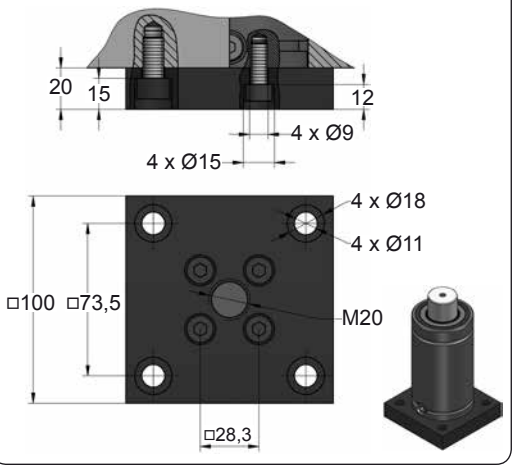


## B41-075

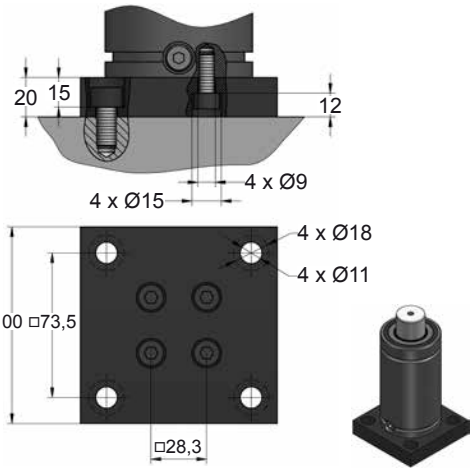


## D02-075

ISO E24.54.815.G EM24.54.700/F

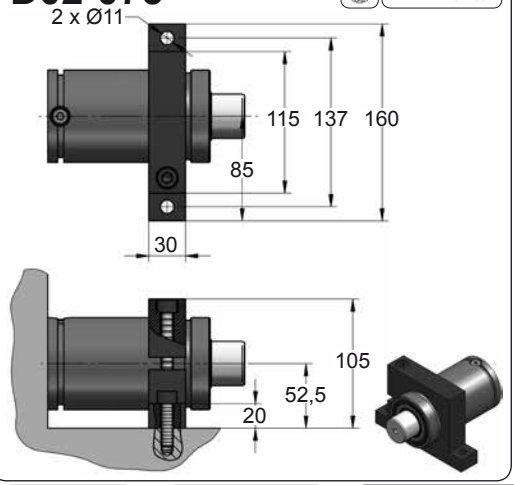


## D67-075

VDI

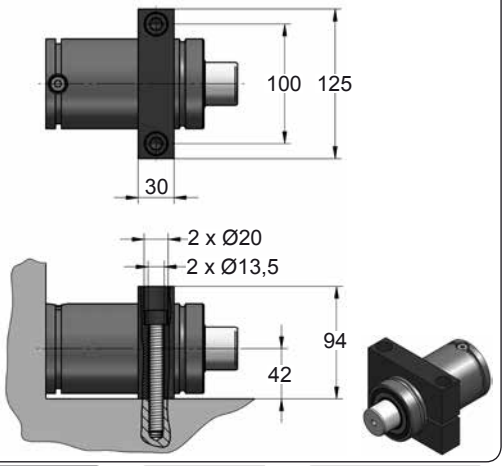









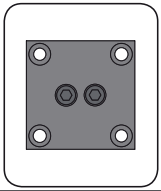

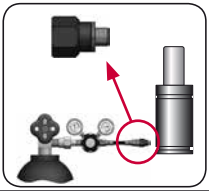

| CODE | | CR 2400 050 | KIT XXXXXXX-S<br>KIT XXXXXXX-C | B36-075 | 06 GA 11 |
|---|---|---|---|---|---|
| ENG | ORDER | GAS SPRING | REPAIR KIT | FLANGE | CHARGING ADAPTER |
| DEU | BESTELLUNG | GASDRUCKFEDER | ERSATZTEILSATZ | FLANSCHE | LADEADAPTER |
| FRA | COMMANDE | RESSORT À GAZ | KIT DE RÉPARATION | BRIDE | RACCORD DE CHARGE |
| ITA | ORDINE | CILINDRO AD AZOTO | KIT DI MANUTENZIONE | FLANGE | ADATTATORE DI CARICO |
| ESP | PEDIDO | RESORTE DE GAS | KIT DE REPARACION | BRIDA | ADAPTADOR DE CARGA |
| POR | PEDIDO | CILINDRO DE GÁS | KIT DE MANUTENÇÃO | FLANGE | ADAPTADOR DE CARGA |

AZOL GAS

# CR 2400 MOUNTS

*Compact Height*








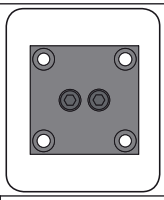

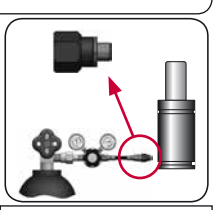

| CODE | | CR 2400 050 | KIT XXXXXXX-S<br>KIT XXXXXXX-C | B36-075 | 06 GA 11 |
|---|---|---|---|---|---|
| ENG | ORDER | GAS SPRING | REPAIR KIT | FLANGE | CHARGING ADAPTER |
| DEU | BESTELLUNG | GASDRUCKFEDER | ERSATZTEILSATZ | FLANSCHE | LADEADAPTER |
| FRA | COMMANDE | RESSORT À GAZ | KIT DE RÉPARATION | BRIDE | RACCORD DE CHARGE |
| ITA | ORDINE | CILINDRO AD AZOTO | KIT DI MANUTENZIONE | FLANGE | ADATTATORE DI CARICO |
| ESP | PEDIDO | RESORTE DE GAS | KIT DE REPARACION | BRIDA | ADAPTADOR DE CARGA |
| POR | PEDIDO | CILINDRO DE GÁS | KIT DE MANUTENÇÃO | FLANGE | ADAPTADOR DE CARGA |

AZOL GAS

# CP HEAVY LOAD LARGE

| MODEL | $F_0$ | Ø | S | L1 | Pmax | Charge Port | | |
|---|---|---|---|---|---|---|---|---|
| CP 150 | 150 | Ø19 | 10 - 80 | 75 - 220 | 160 | M6 | ✗ | ✓ |
| CP 300 | 300 | Ø25 | 10 - 80 | 75 - 225 | 170 | M6 | ✗ | ✓ |
| CP 500 | 500 | Ø32 | 10 - 80 | 75 - 230 | 200 | M6 | ✗ | ✗ |
| CP 1000 V1 | 1000 | Ø38 | 10 - 80 | 75 - 240 | 205 | M6 | ✗ | ✗ |
| CP 2000 V1 | 2000 | Ø50 | 10 - 80 | 90 - 255 | 210 | M6 | ✗ | ✗ |
| CP 3000 V1 | 3000 | Ø63 | 10 - 80 | 95 - 255 | 190 | M6 | ✗ | ✗ |
| CP 5000 V1 | 5000 | Ø75 | 10 - 80 | 100 - 275 | 200 | M6 | ✗ | ✗ |
| CP 8000 V1 | 8000 | Ø95 | 10 - 80 | 110 - 290 | 180 | M6 | ✗ | ✗ |

| S mm | Ø mm | L1 mm | | | | | | | |
|---|---|---|---|---|---|---|---|---|---|
| | | | 50 Ø50 L1=131 L1=138 L1=152 | 50 Ø50 L1=138 | 50 Ø50 L1=138 L1=150 L1=150 | 50 Ø50 L1=170 L1=185 L1=195 | 50 Ø50 L1=195 | 50 Ø50 L1=165 L1=190 | 50 Ø50 L1=220 |
| $F_0$ daN | | | 1000 1000 1000 | 1000 | 1000 1000 750 | 750 1000 1000 | 750 | 1700 2000 | 1800 |
| MODEL | ✗ | | CR 1000 CW 1000 KZ 1000 | AS 1000 | CT 1000 CK 1000 FD 750 | GN 750 CM 1000 CD 1000 | AG 750 | CPH 1700 CP 2000 | CS 1800 |
| SERIES | MINI | | COMPACT HEIGHT | THREADED | LOW PROFILE | HEAVY DUTY | ISO | HEAVY LOAD | POWER COMPACT STROKE |

# CP 150

*Heavy Load*

AZOL GAS

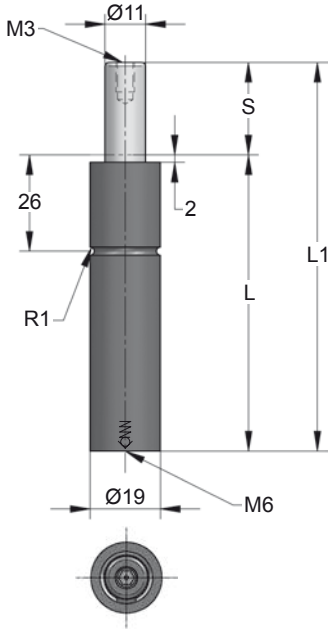


| ORDER | S (mm) | L1 ±0,25 (mm) | L (mm) | Kg. |
|---|---|---|---|---|
| CP 150 010 | 10 | 75 | 65 | 0.10 |
| CP 150 015 | 15 | 85 | 70 | 0.11 |
| CP 150 025 | 25 | 105 | 80 | 0.13 |
| CP 150 038 | 38 | 135 | 97 | 0.15 |
| CP 150 050 | 50 | 160 | 110 | 0.17 |
| CP 150 063 | 63 | 190 | 127 | 0.19 |
| CP 150 080 | 80 | 220 | 140 | 0.22 |

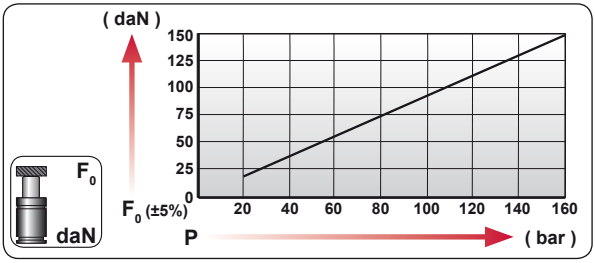


| CODE | bar | psi | $F_0$ daN | $F_1$ daN |
|---|---|---|---|---|
| CP 150 050 | 160 | 2320 | 150 | 245 |
| --------- | --- | --- | --- | --- |

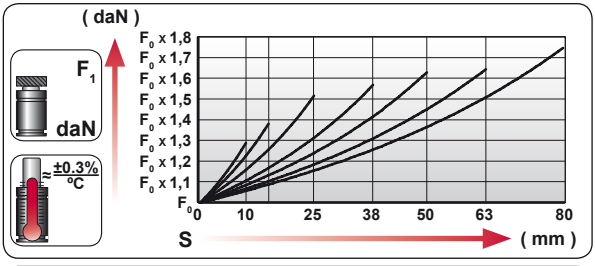


| | |
|---|---|
| ENG | ORDER |
| DEU | BESTELLUNG |
| FRA | COMMANDE |
| ITA | ORDINE |
| ESP | PEDIDO |
| POR | PEDIDO |

$F_0$ daN — S mm

CP 150 50

CP 150 050

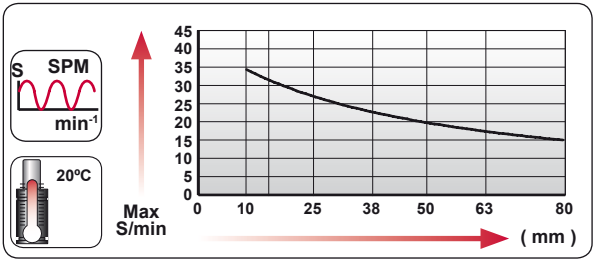


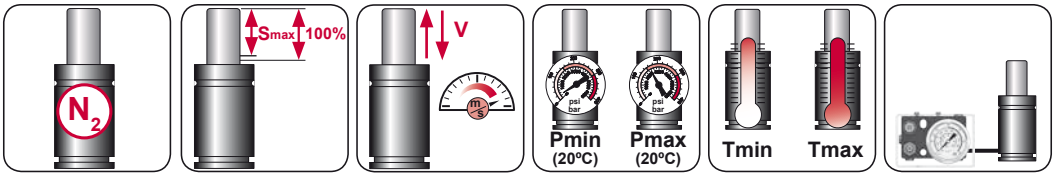


| $N_2$ | Smax < 90% | Vmax 0,5 m/s | bar psi 20 290 | bar psi 160 2320 | ºC ºF 0 32 | ºC ºF 80 176 |
|---|---|---|---|---|---|---|

AZOL GAS

# CP 150 MOUNTS

*Heavy Load*

## A14-019

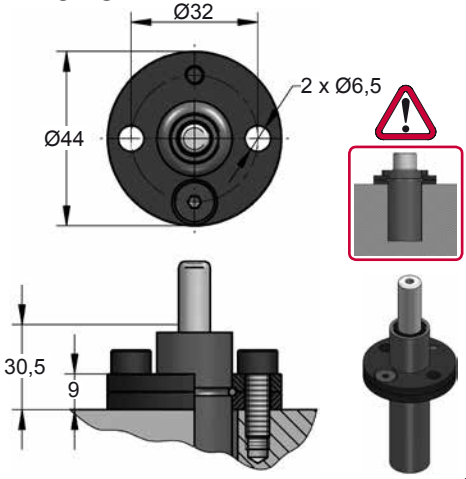


## A44-019

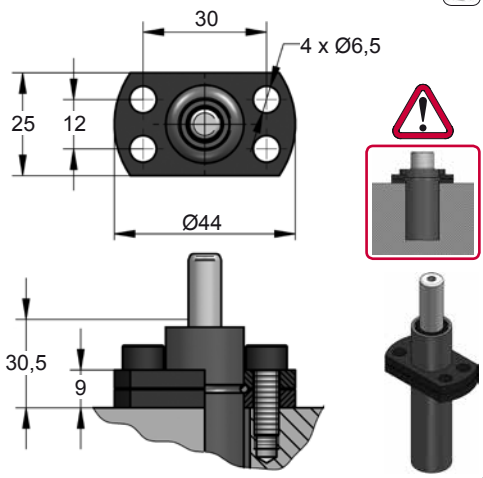









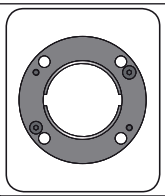

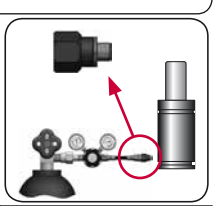

| CODE | | CP 150 050 | KIT XXXXXXX-S | A14-019 | 06 GA 11 |
|---|---|---|---|---|---|
| ENG | ORDER | GAS SPRING | REPAIR KIT | FLANGE | CHARGING ADAPTER |
| DEU | BESTELLUNG | GASDRUCKFEDER | ERSATZTEILSATZ | FLANSCHE | LADEADAPTER |
| FRA | COMMANDE | RESSORT À GAZ | KIT DE RÉPARATION | BRIDE | RACCORD DE CHARGE |
| ITA | ORDINE | CILINDRO AD AZOTO | KIT DI MANUTENZIONE | FLANGE | ADATTATORE DI CARICO |
| ESP | PEDIDO | RESORTE DE GAS | KIT DE REPARACION | BRIDA | ADAPTADOR DE CARGA |
| POR | PEDIDO | CILINDRO DE GÁS | KIT DE MANUTENÇÃO | FLANGE | ADAPTADOR DE CARGA |

# CP 300

*Heavy Load*

AZOL GAS

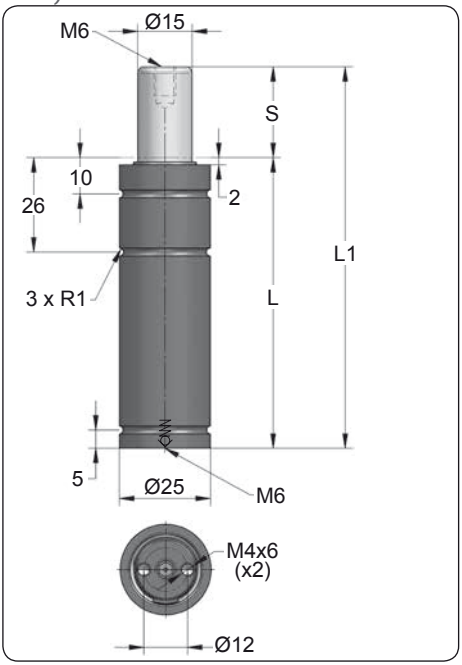


| ORDER | S (mm) | L1 ±0,25 (mm) | L (mm) | Kg. |
|---|---|---|---|---|
| CP 300 010 | 10 | 75 | 65 | 0.18 |
| CP 300 015 | 15 | 85 | 70 | 0.19 |
| CP 300 025 | 25 | 105 | 80 | 0.22 |
| CP 300 038 | 38 | 135 | 97 | 0.26 |
| CP 300 050 | 50 | 160 | 110 | 0.29 |
| CP 300 063 | 63 | 190 | 127 | 0.33 |
| CP 300 080 | 80 | 225 | 145 | 0.38 |

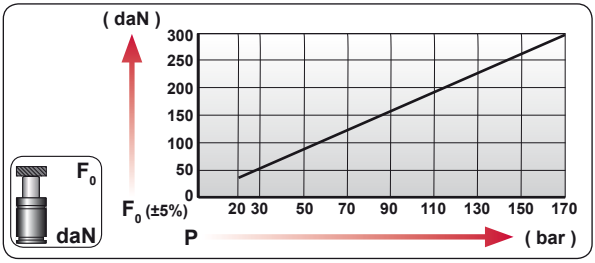


| CODE | | bar | psi | F0 daN | F1 daN |
|---|---|---|---|---|---|
| CP 300 050 | | 170 | 2465 | 300 | 515 |
| --------- | | --- | --- | --- | --- |

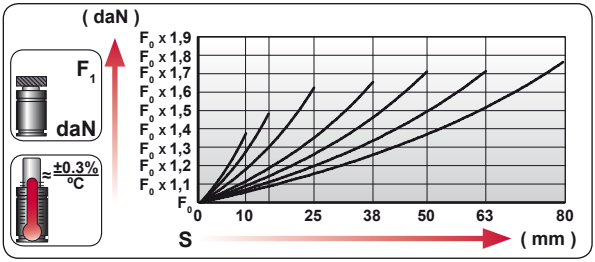


| | |
|---|---|
| ENG | ORDER |
| DEU | BESTELLUNG |
| FRA | COMMANDE |
| ITA | ORDINE |
| ESP | PEDIDO |
| POR | PEDIDO |

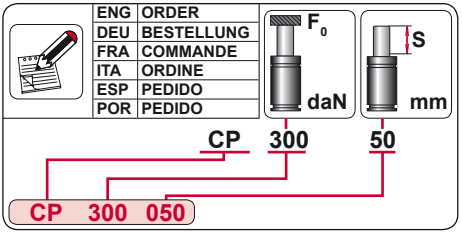


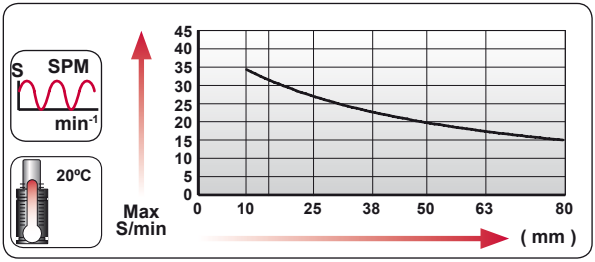


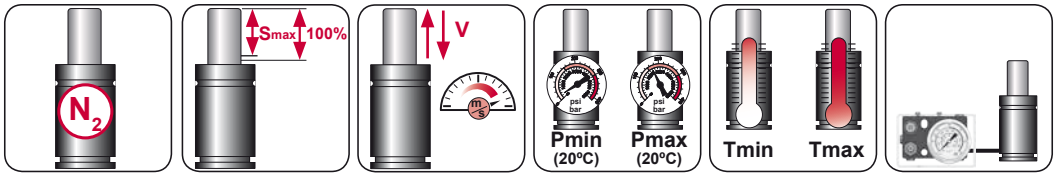


| $N_2$ | Smax < 90% | Vmax 0,5 m/s | bar psi 20 290 | bar psi 170 2465 | ºC ºF 0 32 | ºC ºF 80 176 | |
|---|---|---|---|---|---|---|---|

AZOL GAS

# CP 300 MOUNTS

*Heavy Load*

## A44-025

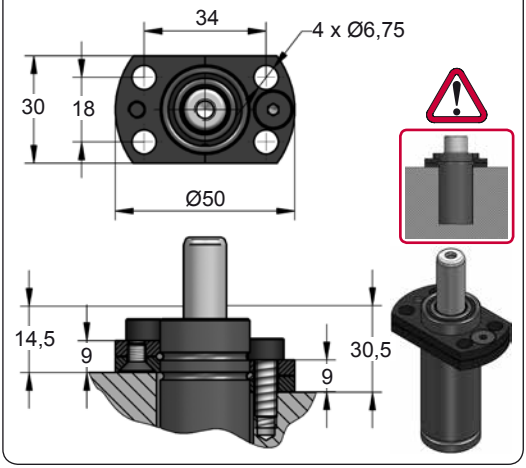


## A49-025

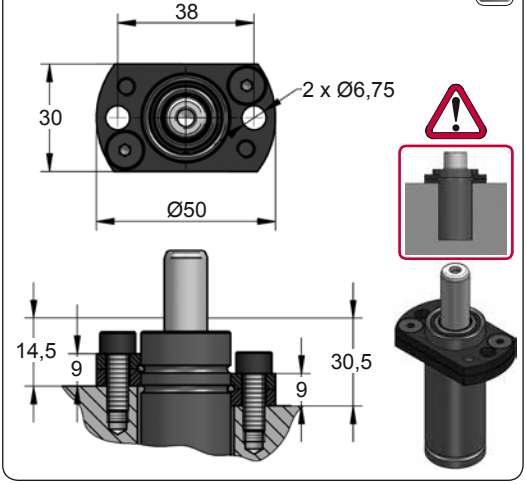









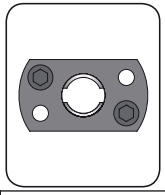

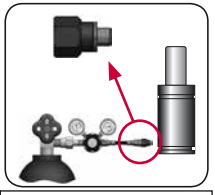

| CODE | | CP 300 050 | KIT XXXXXXX-S | A44-025 | 06 GA 11 |
|---|---|---|---|---|---|
| ENG | ORDER | GAS SPRING | REPAIR KIT | FLANGE | CHARGING ADAPTER |
| DEU | BESTELLUNG | GASDRUCKFEDER | ERSATZTEILSATZ | FLANSCHE | LADEADAPTER |
| FRA | COMMANDE | RESSORT À GAZ | KIT DE RÉPARATION | BRIDE | RACCORD DE CHARGE |
| ITA | ORDINE | CILINDRO AD AZOTO | KIT DI MANUTENZIONE | FLANGE | ADATTATORE DI CARICO |
| ESP | PEDIDO | RESORTE DE GAS | KIT DE REPARACION | BRIDA | ADAPTADOR DE CARGA |
| POR | PEDIDO | CILINDRO DE GÁS | KIT DE MANUTENÇÃO | FLANGE | ADAPTADOR DE CARGA |

# CP 500

*Heavy Load*

AZOL GAS

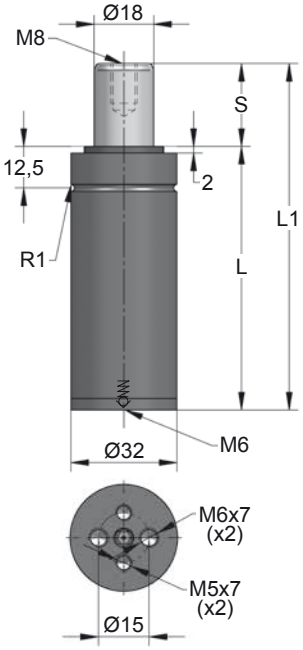


| ORDER | S (mm) | L1 ±0,25 (mm) | L (mm) | Kg. |
|---|---|---|---|---|
| CP 500 010 | 10 | 75 | 65 | 0.30 |
| CP 500 015 | 15 | 85 | 70 | 0.32 |
| CP 500 025 | 25 | 105 | 80 | 0.36 |
| CP 500 038 | 38 | 135 | 97 | 0.42 |
| CP 500 050 | 50 | 160 | 110 | 0.47 |
| CP 500 063 | 63 | 195 | 132 | 0.54 |
| CP 500 080 | 80 | 230 | 150 | 0.61 |

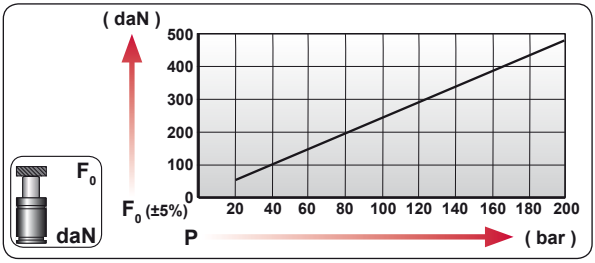


| CODE | bar | psi | $F_0$ daN | $F_1$ daN |
|---|---|---|---|---|
| CP 500 050 | 190 | 2755 | 485 | 755 |
| --------- | --- | --- | --- | --- |

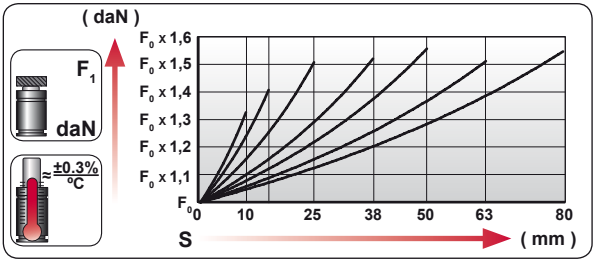


| | |
|---|---|
| ENG | ORDER |
| DEU | BESTELLUNG |
| FRA | COMMANDE |
| ITA | ORDINE |
| ESP | PEDIDO |
| POR | PEDIDO |

$F_0$ daN — S mm

CP 500 50

CP 500 050

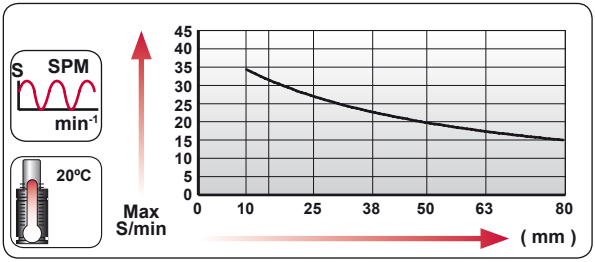


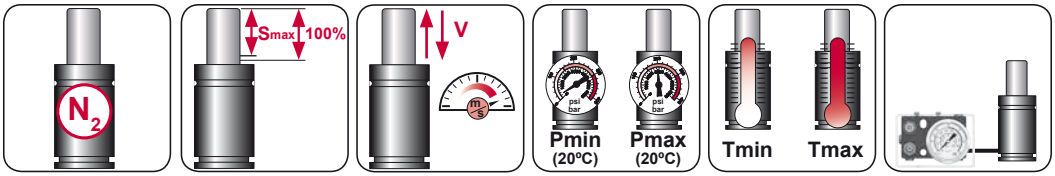


| $N_2$ | Smax < 90% | Vmax 0,5 m/s | bar psi 20 290 | bar psi 200 2900 | ºC ºF 0 32 | ºC ºF 80 176 |
|---|---|---|---|---|---|---|

AZOL GAS

# CP 500 MOUNTS

*Heavy Load*

## A14-032

ISO E24.54.815.G EM24.54.700/F

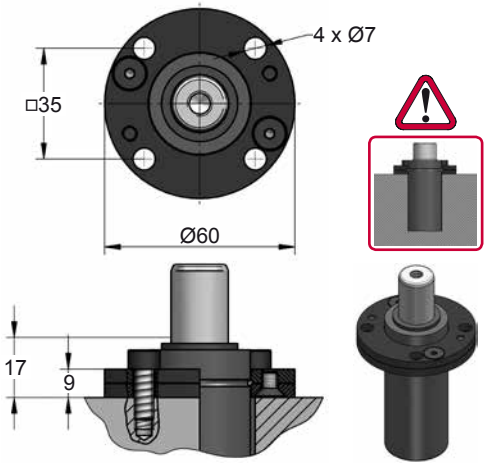


## A34-032

VDI

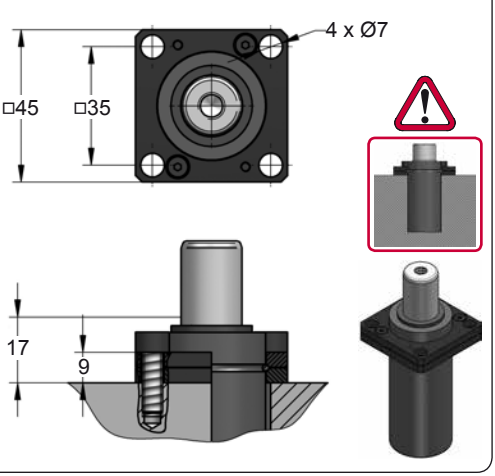


## D02-032

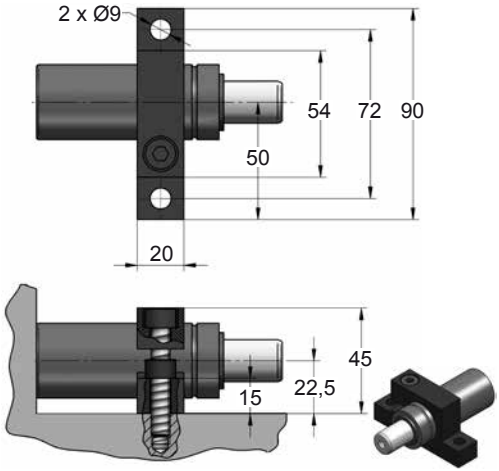


## D67-032

VDI

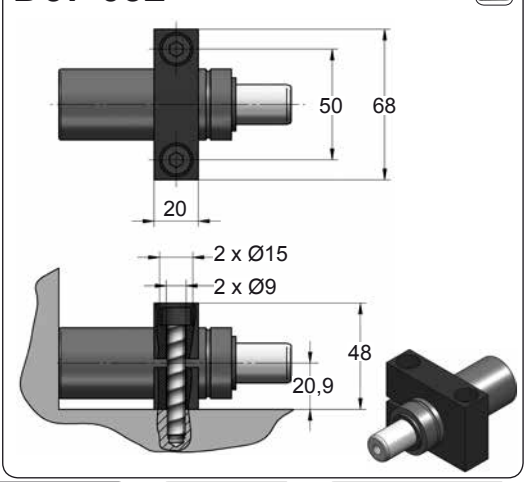




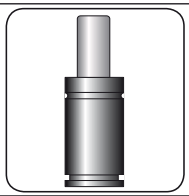




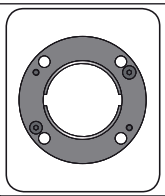

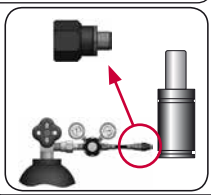

| CODE | | CP 500 050 | | A14-032 | 06 GA 11 |
|---|---|---|---|---|---|
| ENG | ORDER | GAS SPRING | REPAIR KIT | FLANGE | CHARGING ADAPTER |
| DEU | BESTELLUNG | GASDRUCKFEDER | ERSATZTEILSATZ | FLANSCHE | LADEADAPTER |
| FRA | COMMANDE | RESSORT À GAZ | KIT DE RÉPARATION | BRIDE | RACCORD DE CHARGE |
| ITA | ORDINE | CILINDRO AD AZOTO | KIT DI MANUTENZIONE | FLANGE | ADATTATORE DI CARICO |
| ESP | PEDIDO | RESORTE DE GAS | KIT DE REPARACION | BRIDA | ADAPTADOR DE CARGA |
| POR | PEDIDO | CILINDRO DE GÁS | KIT DE MANUTENÇÃO | FLANGE | ADAPTADOR DE CARGA |

# CP 1000

*Heavy Load*

AZOL GAS

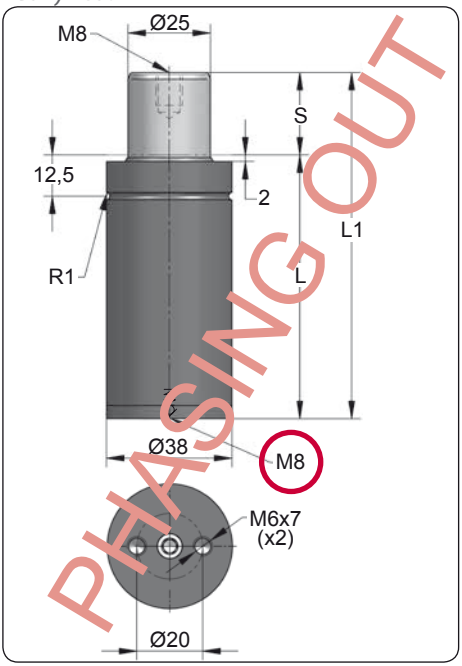


| ORDER | S (mm) | L1 ±0,25 (mm) | L (mm) | Kg. |
|---|---|---|---|---|
| CP 1000 010 | 10 | 75 | 65 | 0.42 |
| CP 1000 015 | 15 | 85 | 70 | 0.45 |
| CP 1000 025 | 25 | 105 | 80 | 0.50 |
| CP 1000 038 | 38 | 135 | 97 | 0.58 |
| CP 1000 050 | 50 | 160 | 110 | 0.64 |
| CP 1000 063 | 63 | 205 | 142 | 0.76 |
| CP 1000 080 | 80 | 240 | 160 | 0.85 |

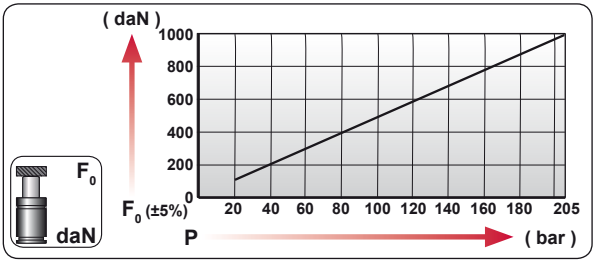


| CODE | | bar | psi | F0 daN | F1 daN |
|---|---|---|---|---|---|
| CP 1000 050 | | 195 | 2830 | 960 | 1655 |
| --------- | | --- | --- | --- | --- |

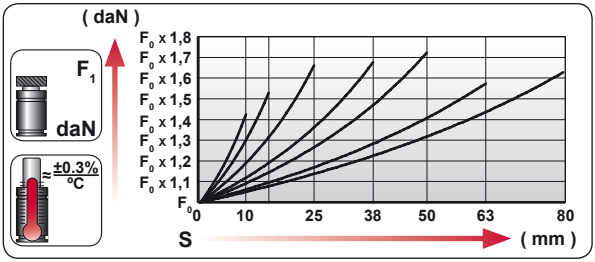


| | |
|---|---|
| ENG | ORDER |
| DEU | BESTELLUNG |
| FRA | COMMANDE |
| ITA | ORDINE |
| ESP | PEDIDO |
| POR | PEDIDO |




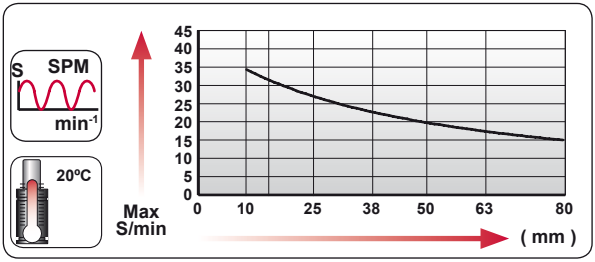


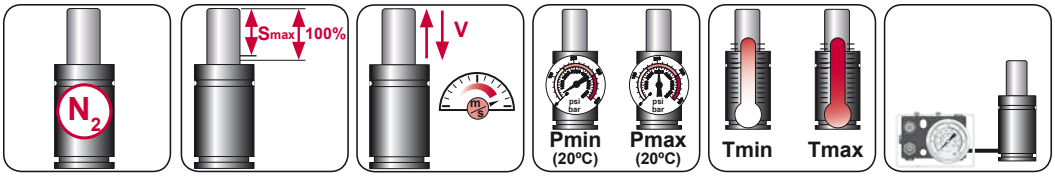


| $N_2$ | Smax < 90% | Vmax 0,5 m/s | bar psi 20 290 | bar psi 205 2975 | ºC ºF 0 32 | ºC ºF 80 176 | |
|---|---|---|---|---|---|---|---|

AZOL GAS

# CP 1000 MOUNTS

*Heavy Load*

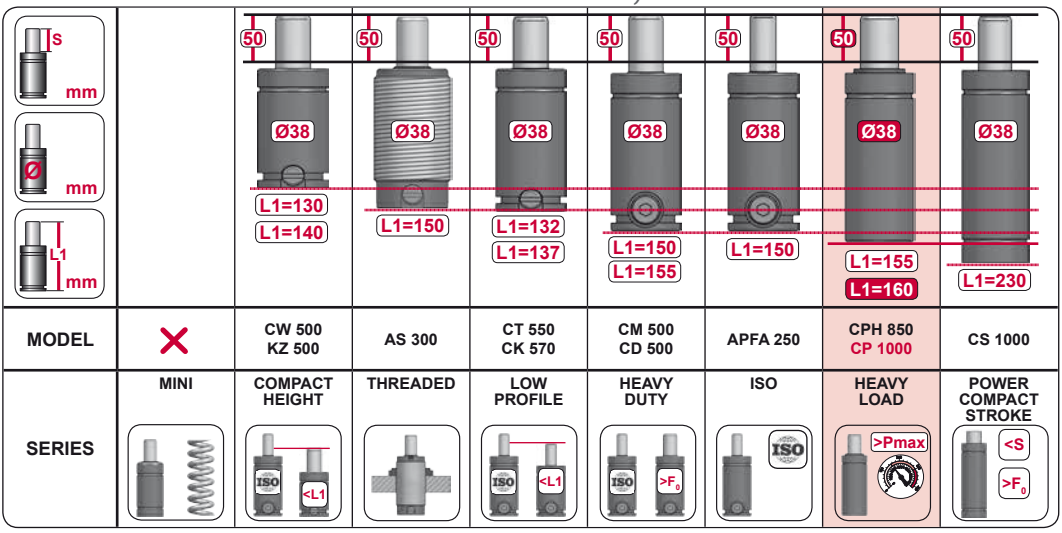


| MODEL | | CW 500 KZ 500 | AS 300 | CT 550 CK 570 | CM 500 CD 500 | APFA 250 | CPH 850 CP 1000 | CS 1000 |
|---|---|---|---|---|---|---|---|---|
| SERIES | MINI | COMPACT HEIGHT | THREADED | LOW PROFILE | HEAVY DUTY | ISO | HEAVY LOAD | POWER COMPACT STROKE |

## A14-038

ISO · E24.54.815.G · EM24.54.700/F

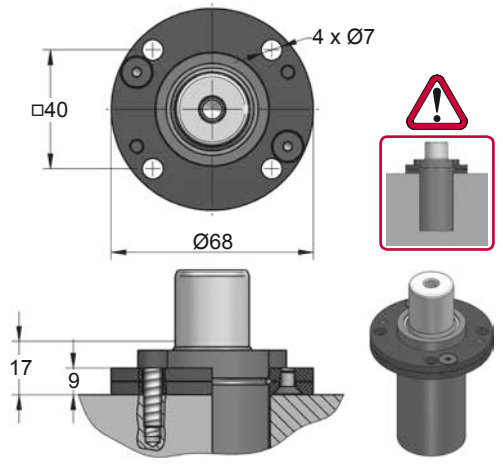


## A34-038

ISO · VDI

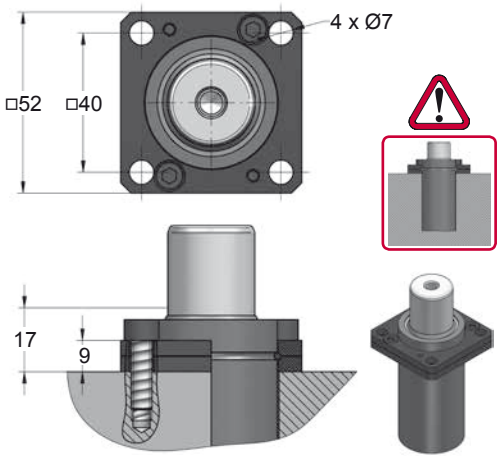





| CODE | | CP 1000 050 | | A14-038 | 08 GA 2 |
|---|---|---|---|---|---|
| ENG | ORDER | GAS SPRING | REPAIR KIT | FLANGE | CHARGING ADAPTER |
| DEU | BESTELLUNG | GASDRUCKFEDER | ERSATZTEILSATZ | FLANSCHE | LADEADAPTER |
| FRA | COMMANDE | RESSORT À GAZ | KIT DE RÉPARATION | BRIDE | RACCORD DE CHARGE |
| ITA | ORDINE | CILINDRO AD AZOTO | KIT DI MANUTENZIONE | FLANGE | ADATTATORE DI CARICO |
| ESP | PEDIDO | RESORTE DE GAS | KIT DE REPARACION | BRIDA | ADAPTADOR DE CARGA |
| POR | PEDIDO | CILINDRO DE GÁS | KIT DE MANUTENÇÃO | FLANGE | ADAPTADOR DE CARGA |

# CP 1000 V1

*Heavy Load*

AZOL GAS

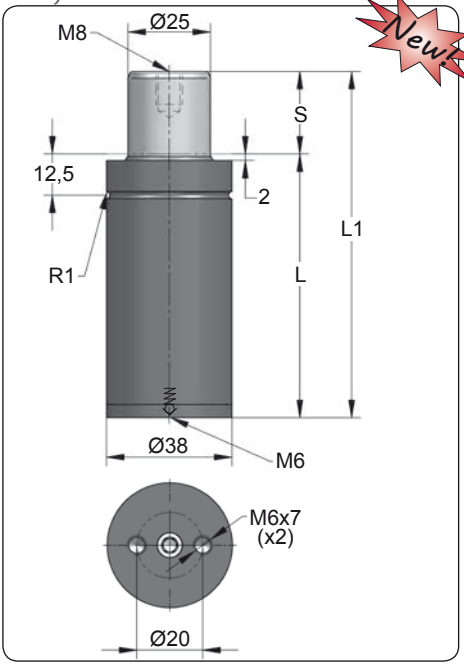


Newt

| ORDER | S (mm) | L1 ±0,25 (mm) | L (mm) | Kg. |
|---|---|---|---|---|
| CP 1000 010 V1 | 10 | 75 | 65 | 0.42 |
| CP 1000 015 V1 | 15 | 85 | 70 | 0.45 |
| CP 1000 025 V1 | 25 | 105 | 80 | 0.50 |
| CP 1000 038 V1 | 38 | 135 | 97 | 0.58 |
| CP 1000 050 V1 | 50 | 160 | 110 | 0.64 |
| CP 1000 063 V1 | 63 | 205 | 142 | 0.76 |
| CP 1000 080 V1 | 80 | 240 | 160 | 0.85 |

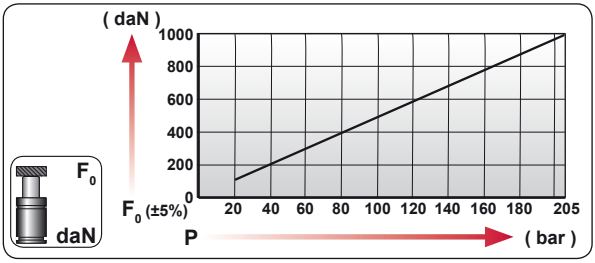


| CODE | bar | psi | $F_0$ daN | $F_1$ daN |
|---|---|---|---|---|
| CP 1000 050 V1 | 195 | 2830 | 960 | 1655 |
| --------- | --- | --- | --- | --- |

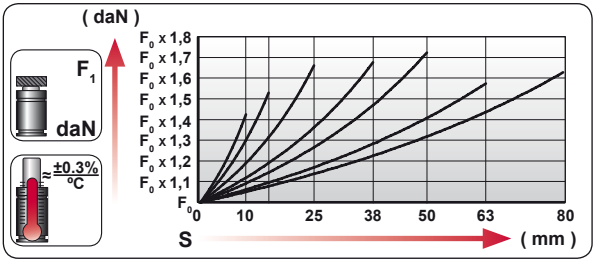


| | |
|---|---|
| ENG | ORDER |
| DEU | BESTELLUNG |
| FRA | COMMANDE |
| ITA | ORDINE |
| ESP | PEDIDO |
| POR | PEDIDO |

$F_0$ daN  S mm

CP 1000 50

CP 1000 050 V1

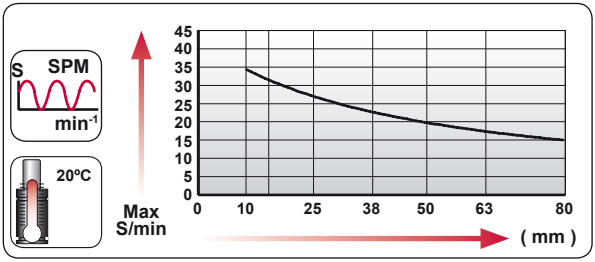


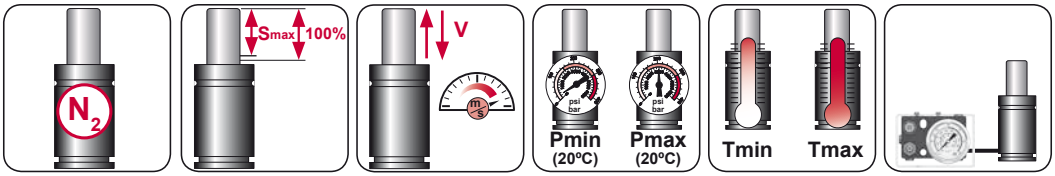


| $N_2$ | Smax < 90% | Vmax 0,5 m/s | bar psi 20 290 | bar psi 205 2975 | ºC ºF 0 32 | ºC ºF 80 176 | |
|---|---|---|---|---|---|---|---|

AZOL GAS

# CP 1000 V1 *MOUNTS*

*Heavy Load*

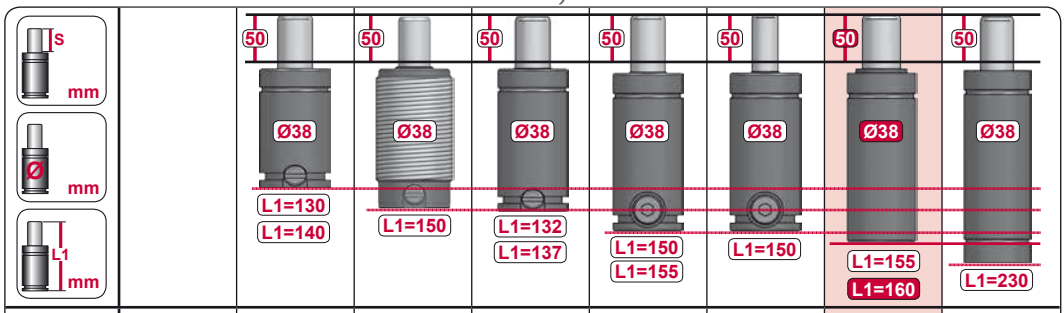


| MODEL | | CW 500 KZ 500 | AS 300 | CT 550 CK 570 | CM 500 CD 500 | APFA 250 | CPH 850 CP 1000 | CS 1000 |
|---|---|---|---|---|---|---|---|---|
| SERIES | MINI | COMPACT HEIGHT | THREADED | LOW PROFILE | HEAVY DUTY | ISO | HEAVY LOAD | POWER COMPACT STROKE |

## A14-038

ISO · E24.54.815.G · EM24.54.700/F

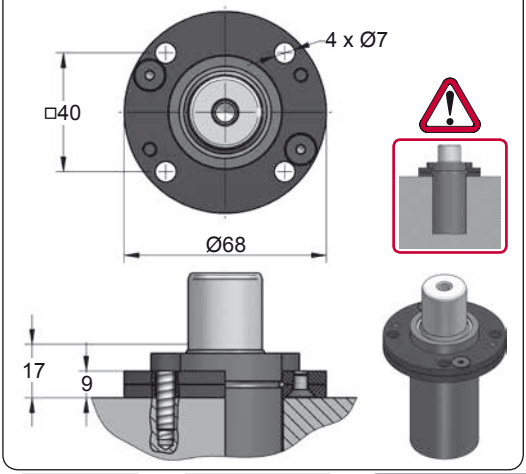


## A34-038

ISO · VDI

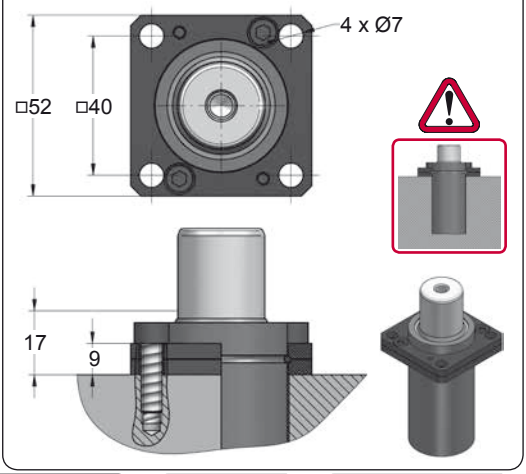









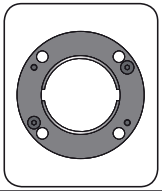

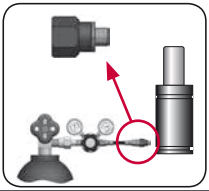

| CODE | | CP 1000 050 V1 | | A14-038 | 06 GA 11 |
|---|---|---|---|---|---|
| ENG | ORDER | GAS SPRING | REPAIR KIT | FLANGE | CHARGING ADAPTER |
| DEU | BESTELLUNG | GASDRUCKFEDER | ERSATZTEILSATZ | FLANSCHE | LADEADAPTER |
| FRA | COMMANDE | RESSORT À GAZ | KIT DE RÉPARATION | BRIDE | RACCORD DE CHARGE |
| ITA | ORDINE | CILINDRO AD AZOTO | KIT DI MANUTENZIONE | FLANGE | ADATTATORE DI CARICO |
| ESP | PEDIDO | RESORTE DE GAS | KIT DE REPARACION | BRIDA | ADAPTADOR DE CARGA |
| POR | PEDIDO | CILINDRO DE GÁS | KIT DE MANUTENÇÃO | FLANGE | ADAPTADOR DE CARGA |

# CP 2000

*Heavy Load*

AZOL GAS

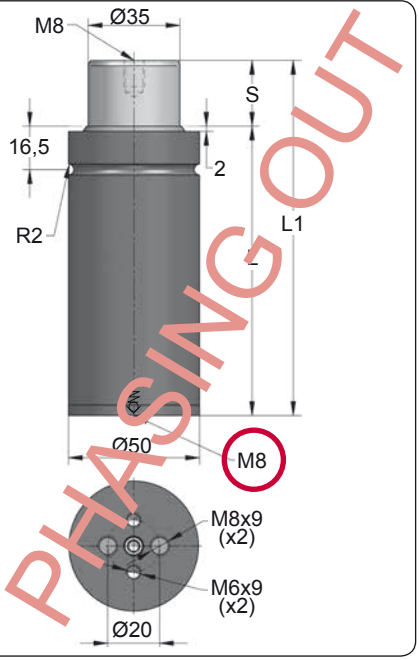


PHASING OUT

| ORDER | S (mm) | L1 ±0,25 (mm) | L (mm) | Kg. |
|---|---|---|---|---|
| CP 2000 010 | 10 | 90 | 80 | 0.98 |
| CP 2000 015 | 15 | 115 | 100 | 1.12 |
| CP 2000 025 | 25 | 135 | 110 | 1.22 |
| CP 2000 038 | 38 | 165 | 127 | 1.38 |
| CP 2000 050 | 50 | 190 | 140 | 1.52 |
| CP 2000 063 | 63 | 220 | 157 | 1.68 |
| CP 2000 080 | 80 | 255 | 175 | 1.86 |

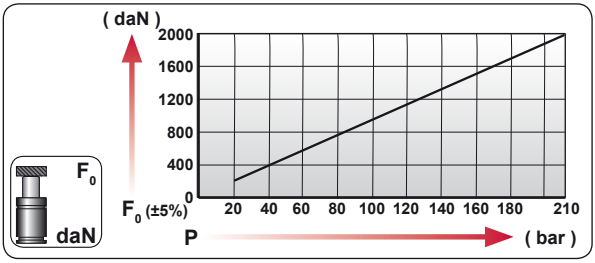


| CODE | bar | psi | $F_0$ daN | $F_1$ daN |
|---|---|---|---|---|
| CP 2000 050 | 200 | 2900 | 1925 | 3350 |
| --------- | --- | --- | --- | --- |

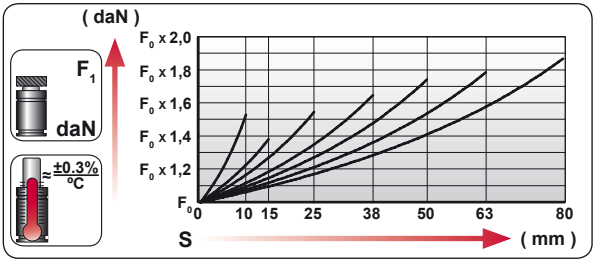


| | |
|---|---|
| ENG | ORDER |
| DEU | BESTELLUNG |
| FRA | COMMANDE |
| ITA | ORDINE |
| ESP | PEDIDO |
| POR | PEDIDO |

$F_0$ daN — S mm

CP 2000 50

CP 2000 050

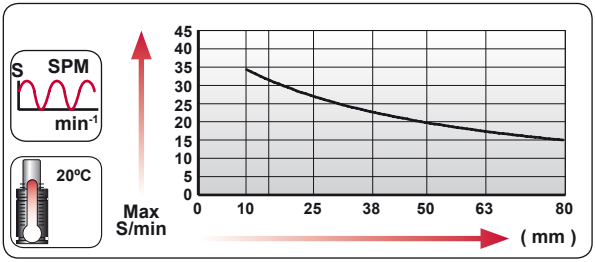


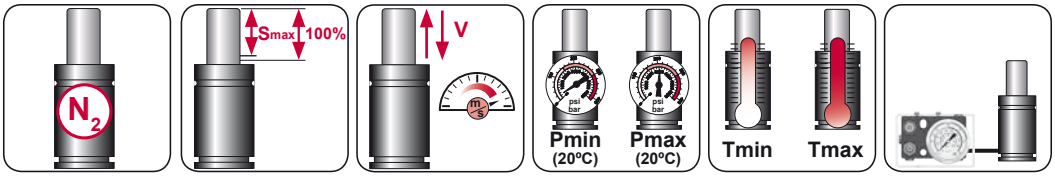


| $N_2$ | Smax < 90% | Vmax 0,5 m/s | bar psi 20 290 | bar psi 210 3045 | ºC ºF 0 32 | ºC ºF 80 176 |
|---|---|---|---|---|---|---|

AZOL GAS

# CP 2000 MOUNTS

*Heavy Load*

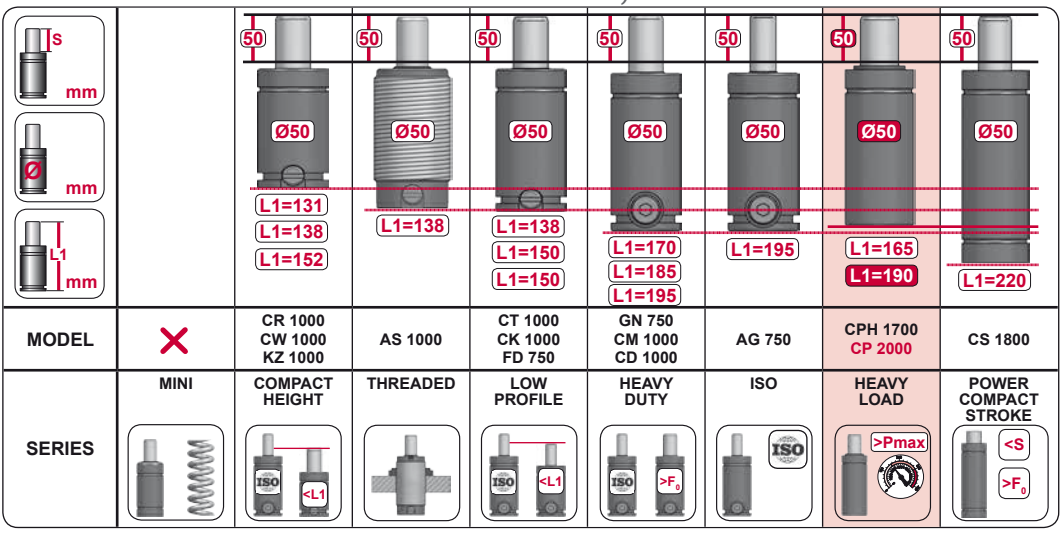


| MODEL | | CR 1000 CW 1000 KZ 1000 | AS 1000 | CT 1000 CK 1000 FD 750 | GN 750 CM 1000 CD 1000 | AG 750 | CPH 1700 CP 2000 | CS 1800 |
|---|---|---|---|---|---|---|---|---|
| SERIES | MINI | COMPACT HEIGHT | THREADED | LOW PROFILE | HEAVY DUTY | ISO | HEAVY LOAD | POWER COMPACT STROKE |

## A14-050

E24.54.815.G
EM24.54.700/F

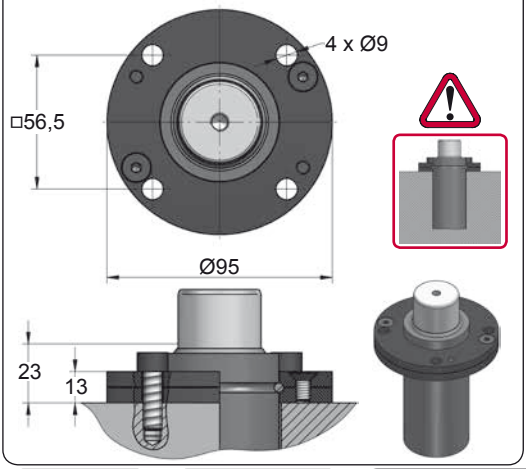


## A34-050

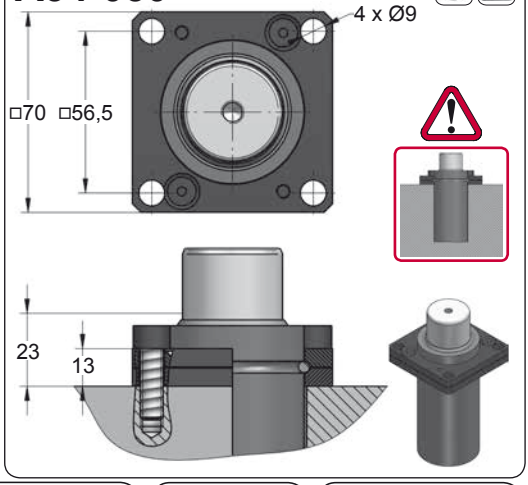





| CODE | | CP 2000 050 | | A14-050 | 08 GA 2 |
|---|---|---|---|---|---|
| ENG | ORDER | GAS SPRING | REPAIR KIT | FLANGE | CHARGING ADAPTER |
| DEU | BESTELLUNG | GASDRUCKFEDER | ERSATZTEILSATZ | FLANSCHE | LADEADAPTER |
| FRA | COMMANDE | RESSORT À GAZ | KIT DE RÉPARATION | BRIDE | RACCORD DE CHARGE |
| ITA | ORDINE | CILINDRO AD AZOTO | KIT DI MANUTENZIONE | FLANGE | ADATTATORE DI CARICO |
| ESP | PEDIDO | RESORTE DE GAS | KIT DE REPARACION | BRIDA | ADAPTADOR DE CARGA |
| POR | PEDIDO | CILINDRO DE GÁS | KIT DE MANUTENÇÃO | FLANGE | ADAPTADOR DE CARGA |

# CP 2000 V1

*Heavy Load*

AZOL GAS

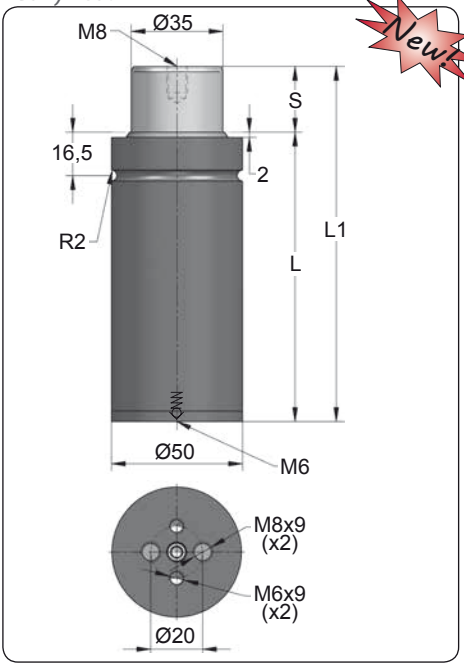


Newt

| ORDER | S (mm) | L1 ±0,25 (mm) | L (mm) | Kg. |
|---|---|---|---|---|
| CP 2000 010 V1 | 10 | 90 | 80 | 0.98 |
| CP 2000 015 V1 | 15 | 115 | 100 | 1.12 |
| CP 2000 025 V1 | 25 | 135 | 110 | 1.22 |
| CP 2000 038 V1 | 38 | 165 | 127 | 1.38 |
| CP 2000 050 V1 | 50 | 190 | 140 | 1.52 |
| CP 2000 063 V1 | 63 | 220 | 157 | 1.68 |
| CP 2000 080 V1 | 80 | 255 | 175 | 1.86 |

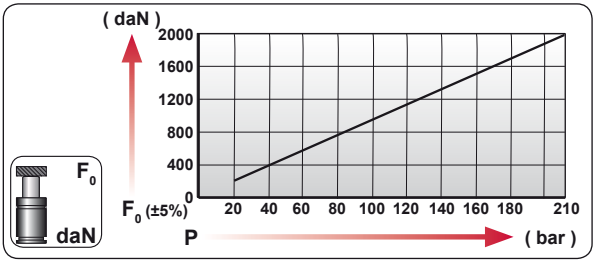


| CODE | bar | psi | F0 daN | F1 daN |
|---|---|---|---|---|
| CP 2000 050 V1 | 200 | 2900 | 1925 | 3350 |
| --------- | --- | --- | --- | --- |

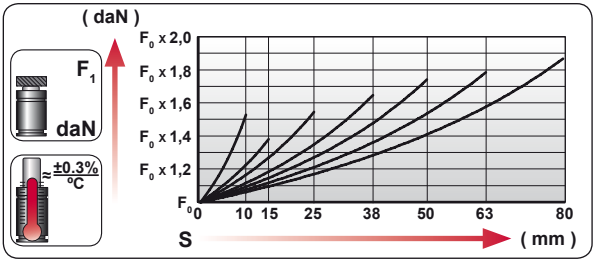


| | |
|---|---|
| ENG | ORDER |
| DEU | BESTELLUNG |
| FRA | COMMANDE |
| ITA | ORDINE |
| ESP | PEDIDO |
| POR | PEDIDO |

F0 daN S mm

CP 2000 50

CP 2000 050 V1

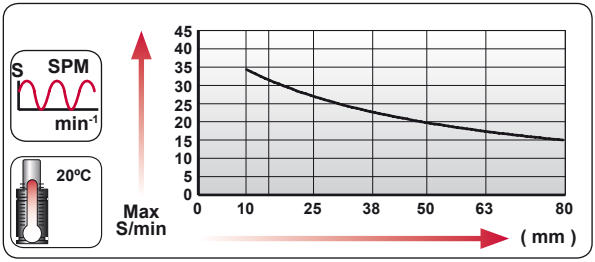


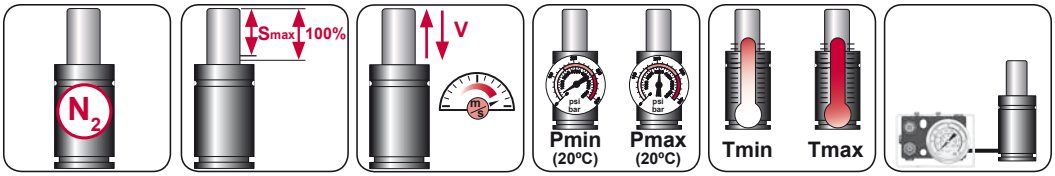


| $N_2$ | Smax < 90% | Vmax 0,5 m/s | bar psi 20 290 | bar psi 210 3045 | ºC ºF 0 32 | ºC ºF 80 176 |
|---|---|---|---|---|---|---|

AZOL GAS

# CP 2000 V1 *MOUNTS*

*Heavy Load*

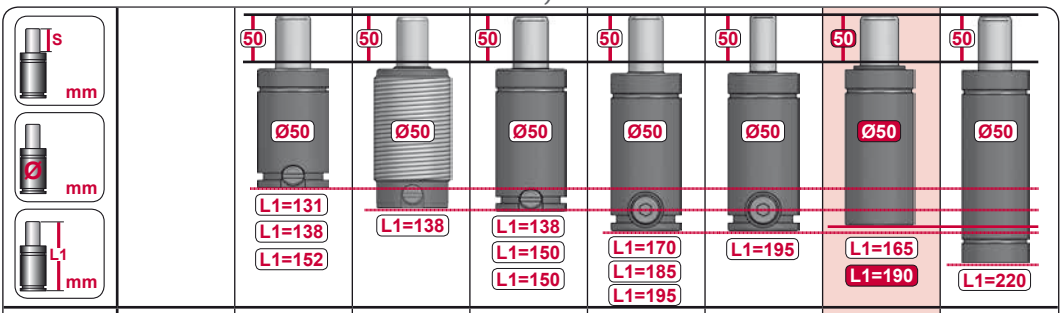


| MODEL | | CR 1000 CW 1000 KZ 1000 | AS 1000 | CT 1000 CK 1000 FD 750 | GN 750 CM 1000 CD 1000 | AG 750 | CPH 1700 CP 2000 | CS 1800 |
|---|---|---|---|---|---|---|---|---|
| SERIES | MINI | COMPACT HEIGHT | THREADED | LOW PROFILE | HEAVY DUTY | ISO | HEAVY LOAD | POWER COMPACT STROKE |

## A14-050

E24.54.815.G
EM24.54.700/F

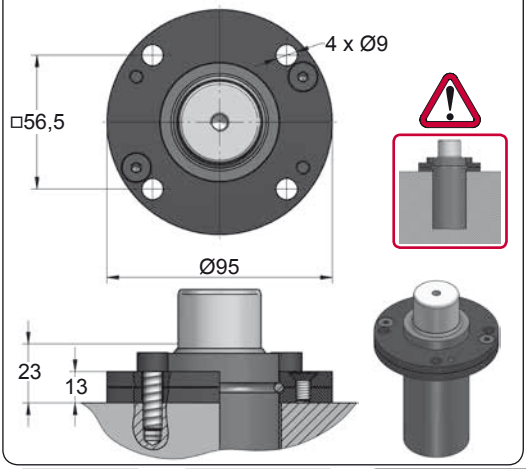


## A34-050

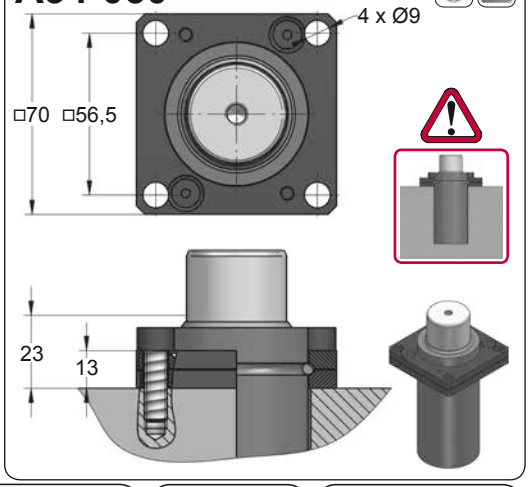





| CODE | | CP 2000 050 V1 | | A14-050 | 06 GA 11 |
|---|---|---|---|---|---|
| ENG | ORDER | GAS SPRING | REPAIR KIT | FLANGE | CHARGING ADAPTER |
| DEU | BESTELLUNG | GASDRUCKFEDER | ERSATZTEILSATZ | FLANSCHE | LADEADAPTER |
| FRA | COMMANDE | RESSORT À GAZ | KIT DE RÉPARATION | BRIDE | RACCORD DE CHARGE |
| ITA | ORDINE | CILINDRO AD AZOTO | KIT DI MANUTENZIONE | FLANGE | ADATTATORE DI CARICO |
| ESP | PEDIDO | RESORTE DE GAS | KIT DE REPARACION | BRIDA | ADAPTADOR DE CARGA |
| POR | PEDIDO | CILINDRO DE GÁS | KIT DE MANUTENÇÃO | FLANGE | ADAPTADOR DE CARGA |

# CP 3000

*Heavy Load*

AZOL GAS

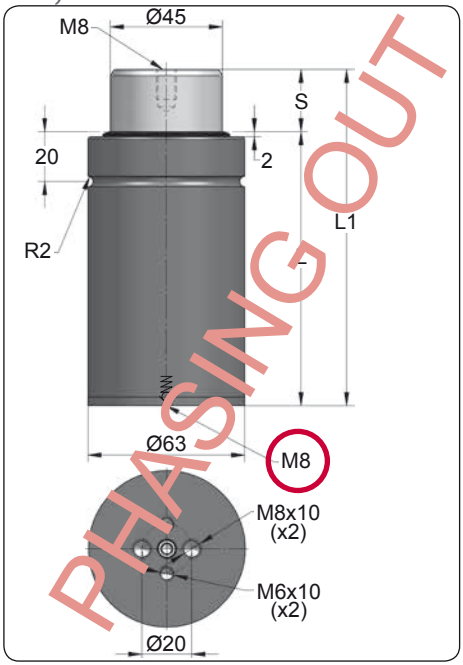


| ORDER | S (mm) | L1 ±0,25 (mm) | L (mm) | Kg. |
|---|---|---|---|---|
| CP 3000 010 | 10 | 95 | 85 | 1.62 |
| CP 3000 015 | 15 | 115 | 100 | 1.79 |
| CP 3000 025 | 25 | 135 | 110 | 1.96 |
| CP 3000 038 | 38 | 165 | 127 | 2.21 |
| CP 3000 050 | 50 | 190 | 140 | 2.42 |
| CP 3000 063 | 63 | 220 | 157 | 2.67 |
| CP 3000 080 | 80 | 255 | 175 | 2.97 |

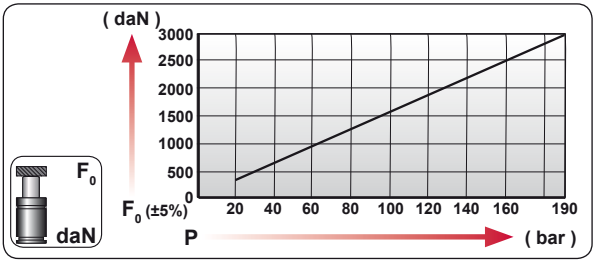


| CODE | bar | psi | $F_0$ daN | $F_1$ daN |
|---|---|---|---|---|
| CP 3000 050 | 180 | 2610 | 2860 | 5100 |
| --------- | --- | --- | --- | --- |

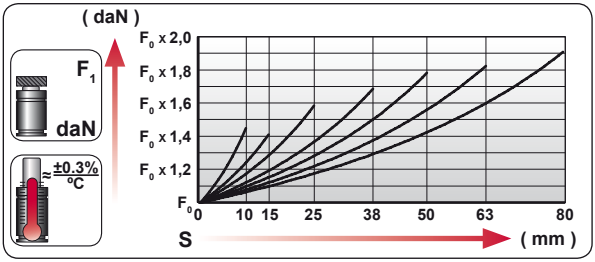


| | |
|---|---|
| ENG | ORDER |
| DEU | BESTELLUNG |
| FRA | COMMANDE |
| ITA | ORDINE |
| ESP | PEDIDO |
| POR | PEDIDO |




CP 3000 50

CP 3000 50

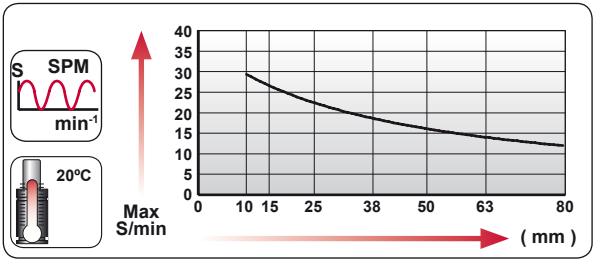


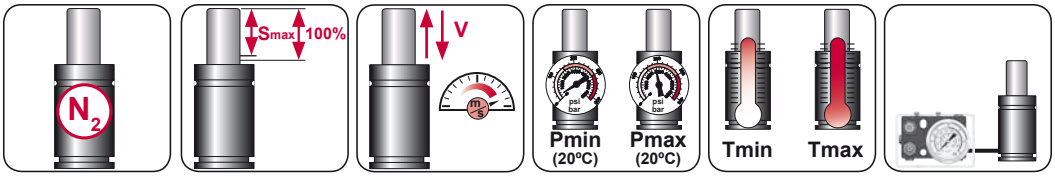


| $N_2$ | Smax < 90% | Vmax 0,5 m/s | bar psi 20 290 | bar psi 190 2755 | ºC ºF 0 32 | ºC ºF 80 176 | |
|---|---|---|---|---|---|---|---|

AZOL GAS

# CP 3000 MOUNTS

*Heavy Load*

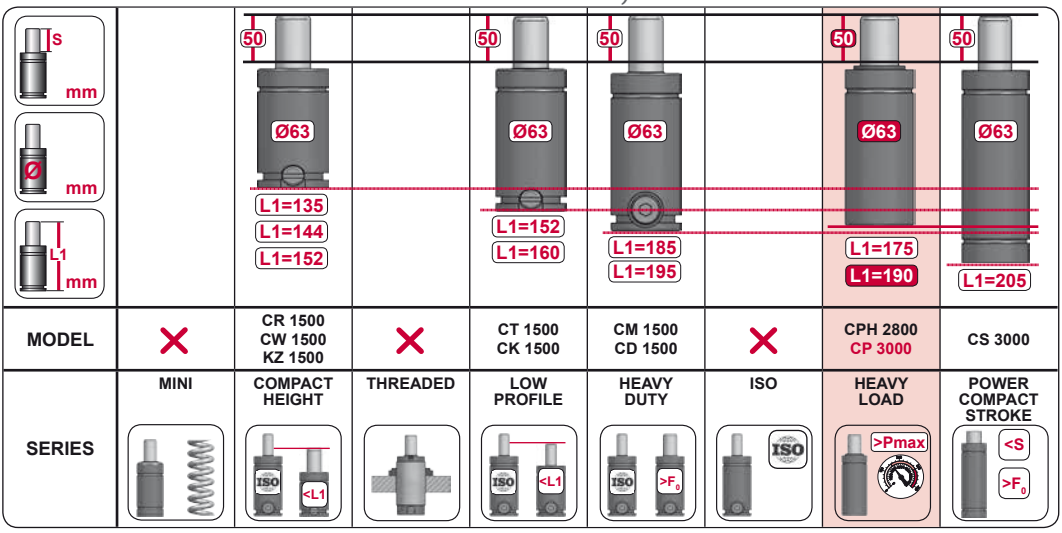


## A14-063

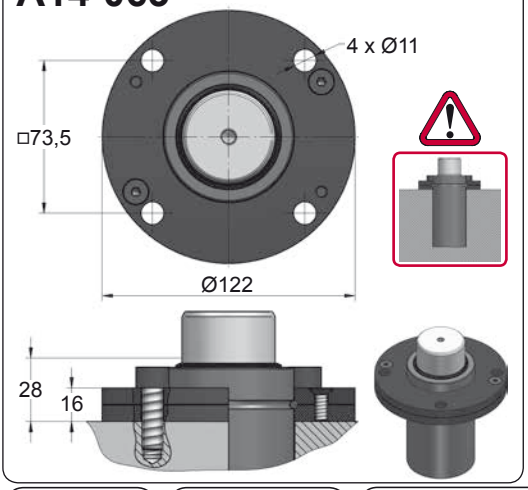


## A39-063

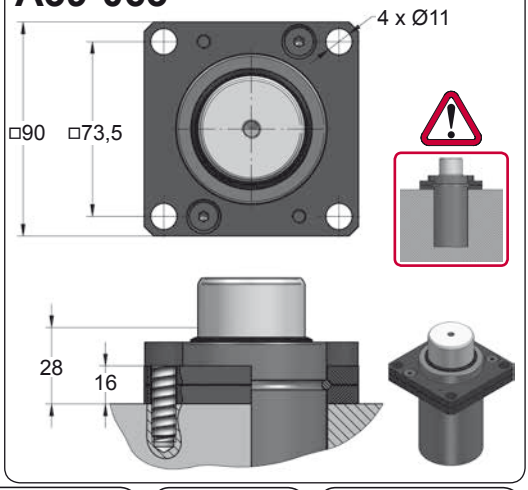









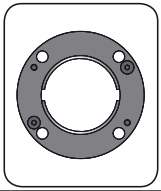

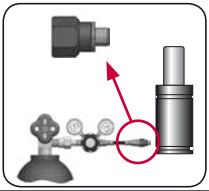

| CODE | | CP 3000 050 | | A14-063 | 08 GA 2 |
|---|---|---|---|---|---|
| ENG | ORDER | GAS SPRING | REPAIR KIT | FLANGE | CHARGING ADAPTER |
| DEU | BESTELLUNG | GASDRUCKFEDER | ERSATZTEILSATZ | FLANSCHE | LADEADAPTER |
| FRA | COMMANDE | RESSORT À GAZ | KIT DE RÉPARATION | BRIDE | RACCORD DE CHARGE |
| ITA | ORDINE | CILINDRO AD AZOTO | KIT DI MANUTENZIONE | FLANGE | ADATTATORE DI CARICO |
| ESP | PEDIDO | RESORTE DE GAS | KIT DE REPARACION | BRIDA | ADAPTADOR DE CARGA |
| POR | PEDIDO | CILINDRO DE GÁS | KIT DE MANUTENÇÃO | FLANGE | ADAPTADOR DE CARGA |

# CP 3000 V1

*Heavy Load*

AZOL GAS

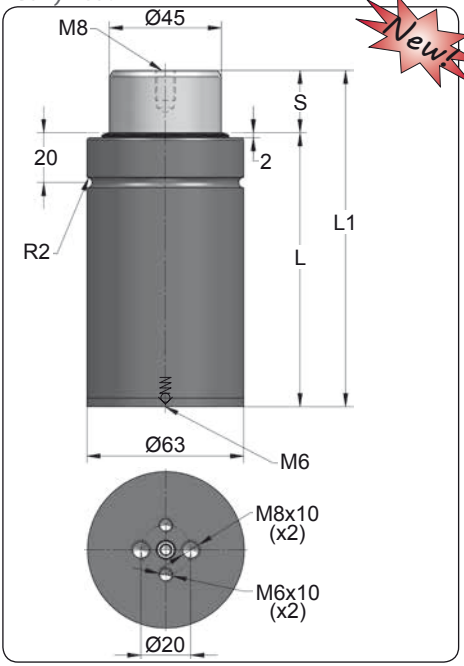


Newt

| ORDER | S (mm) | L1 ±0,25 (mm) | L (mm) | Kg. |
|---|---|---|---|---|
| CP 3000 010 V1 | 10 | 95 | 85 | 1.62 |
| CP 3000 015 V1 | 15 | 115 | 100 | 1.79 |
| CP 3000 025 V1 | 25 | 135 | 110 | 1.96 |
| CP 3000 038 V1 | 38 | 165 | 127 | 2.21 |
| CP 3000 050 V1 | 50 | 190 | 140 | 2.42 |
| CP 3000 063 V1 | 63 | 220 | 157 | 2.67 |
| CP 3000 080 V1 | 80 | 255 | 175 | 2.97 |

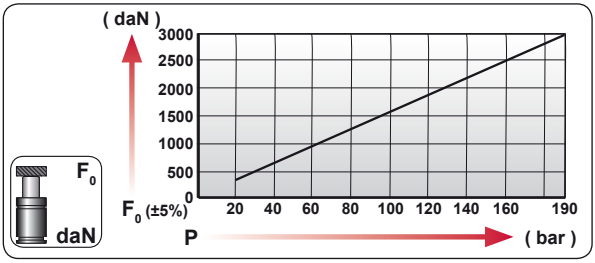


| CODE | bar | psi | $F_0$ daN | $F_1$ daN |
|---|---|---|---|---|
| CP 3000 050 V1 | 180 | 2610 | 2860 | 5100 |
| --------- | --- | --- | --- | --- |

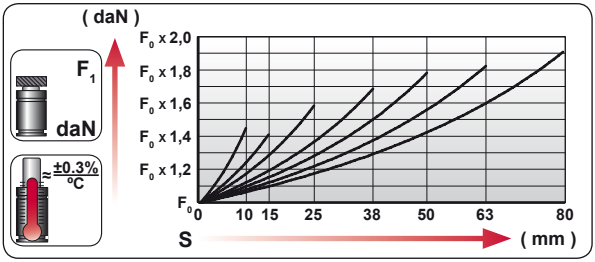


| | |
|---|---|
| ENG | ORDER |
| DEU | BESTELLUNG |
| FRA | COMMANDE |
| ITA | ORDINE |
| ESP | PEDIDO |
| POR | PEDIDO |

$F_0$ daN — S mm

CP 3000 50

CP 3000 050 V1

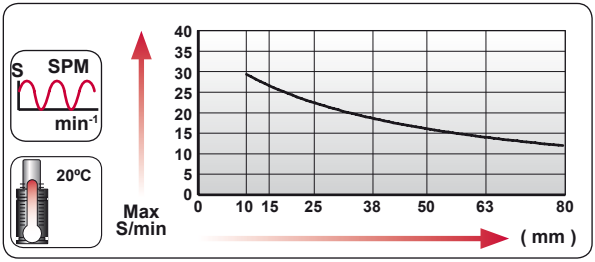


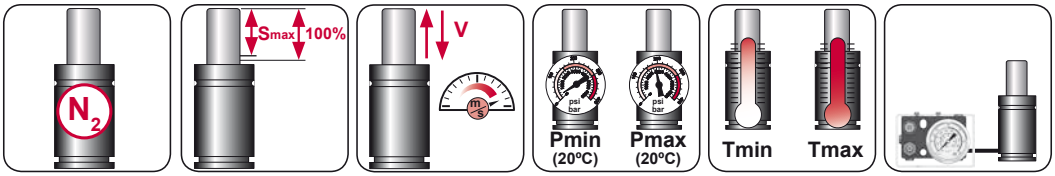


| $N_2$ | Smax < 90% | Vmax 0,5 m/s | bar psi 20 290 | bar psi 190 2755 | ºC ºF 0 32 | ºC ºF 80 176 |
|---|---|---|---|---|---|---|

AZOL GAS

# CP 3000 V1 *MOUNTS*

*Heavy Load*

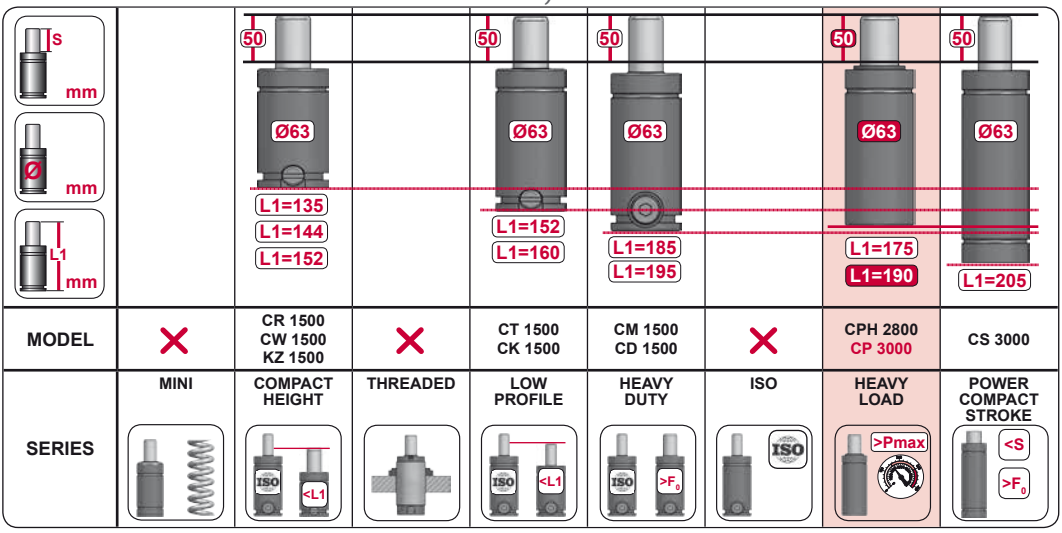


| MODEL | | CR 1500 CW 1500 KZ 1500 | | CT 1500 CK 1500 | CM 1500 CD 1500 | | CPH 2800 CP 3000 | CS 3000 |
|---|---|---|---|---|---|---|---|---|
| SERIES | MINI | COMPACT HEIGHT | THREADED | LOW PROFILE | HEAVY DUTY | ISO | HEAVY LOAD | POWER COMPACT STROKE |

## A14-063

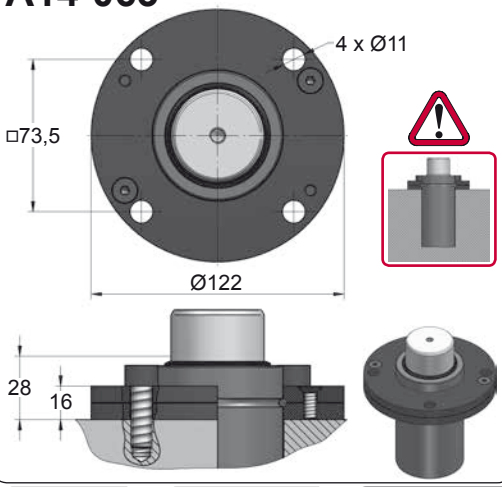


## A39-063

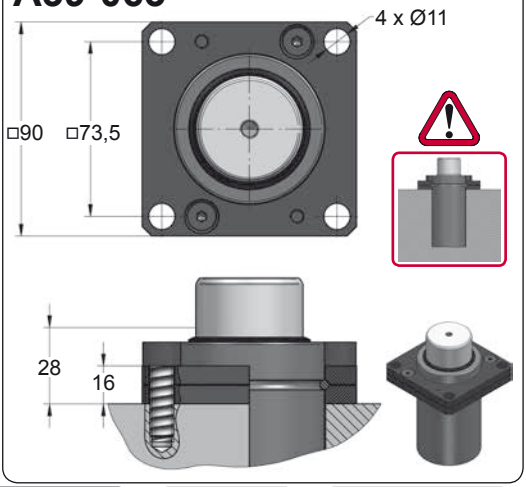





| CODE | | CP 3000 050 V1 | | A14-063 | 06 GA 11 |
|---|---|---|---|---|---|
| ENG | ORDER | GAS SPRING | REPAIR KIT | FLANGE | CHARGING ADAPTER |
| DEU | BESTELLUNG | GASDRUCKFEDER | ERSATZTEILSATZ | FLANSCHE | LADEADAPTER |
| FRA | COMMANDE | RESSORT À GAZ | KIT DE RÉPARATION | BRIDE | RACCORD DE CHARGE |
| ITA | ORDINE | CILINDRO AD AZOTO | KIT DI MANUTENZIONE | FLANGE | ADATTATORE DI CARICO |
| ESP | PEDIDO | RESORTE DE GAS | KIT DE REPARACION | BRIDA | ADAPTADOR DE CARGA |
| POR | PEDIDO | CILINDRO DE GÁS | KIT DE MANUTENÇÃO | FLANGE | ADAPTADOR DE CARGA |

# CP 5000

*Heavy Load*

AZOL GAS

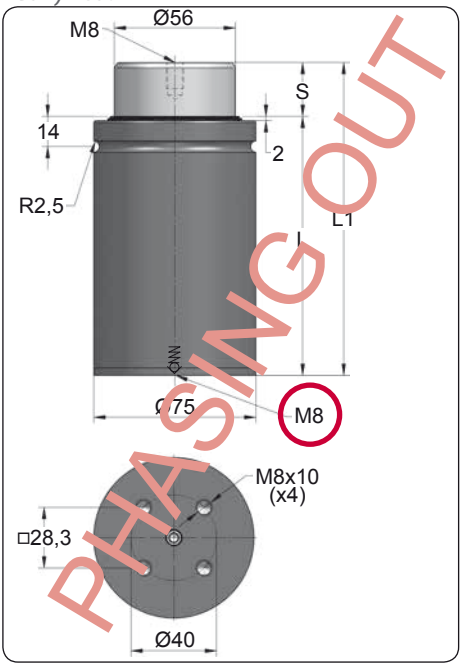


| ORDER | S (mm) | L1 ±0,25 (mm) | L (mm) | Kg. |
|---|---|---|---|---|
| CP 5000 010 | 10 | 100 | 90 | 2.43 |
| CP 5000 015 | 15 | 125 | 110 | 2.69 |
| CP 5000 025 | 25 | 145 | 120 | 2.91 |
| CP 5000 038 | 38 | 175 | 137 | 3.24 |
| CP 5000 050 | 50 | 200 | 150 | 3.51 |
| CP 5000 063 | 63 | 240 | 177 | 3.94 |
| CP 5000 080 | 80 | 275 | 195 | 4.33 |

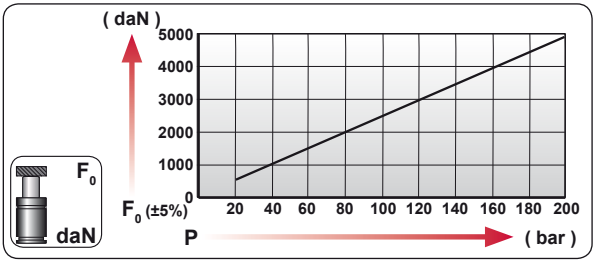


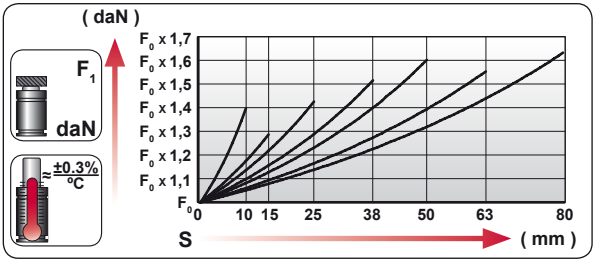


| CODE | bar | psi | $F_0$ daN | $F_1$ daN |
|---|---|---|---|---|
| CP 5000 050 | 200 | 2900 | 4925 | 7890 |
| --------- | --- | --- | --- | --- |

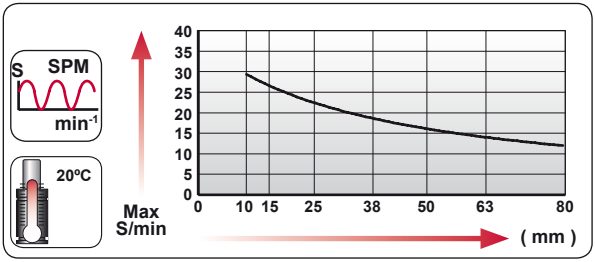


| | |
|---|---|
| ENG | ORDER |
| DEU | BESTELLUNG |
| FRA | COMMANDE |
| ITA | ORDINE |
| ESP | PEDIDO |
| POR | PEDIDO |

$F_0$ daN — S mm

CP 5000 50

CP 5000 050

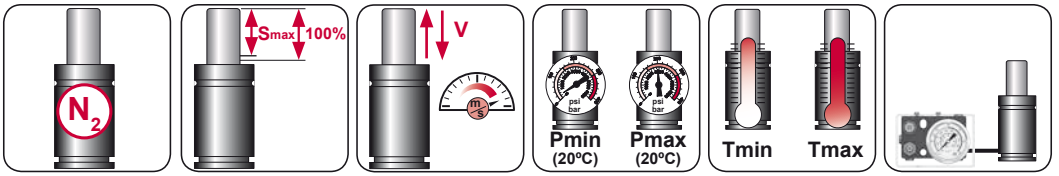


| $N_2$ | Smax < 90% | Vmax 0,5 m/s | bar psi 20 290 | bar psi 200 2900 | ºC ºF 0 32 | ºC ºF 80 176 | |
|---|---|---|---|---|---|---|---|

AZOL GAS

# CP 5000 MOUNTS

*Heavy Load*

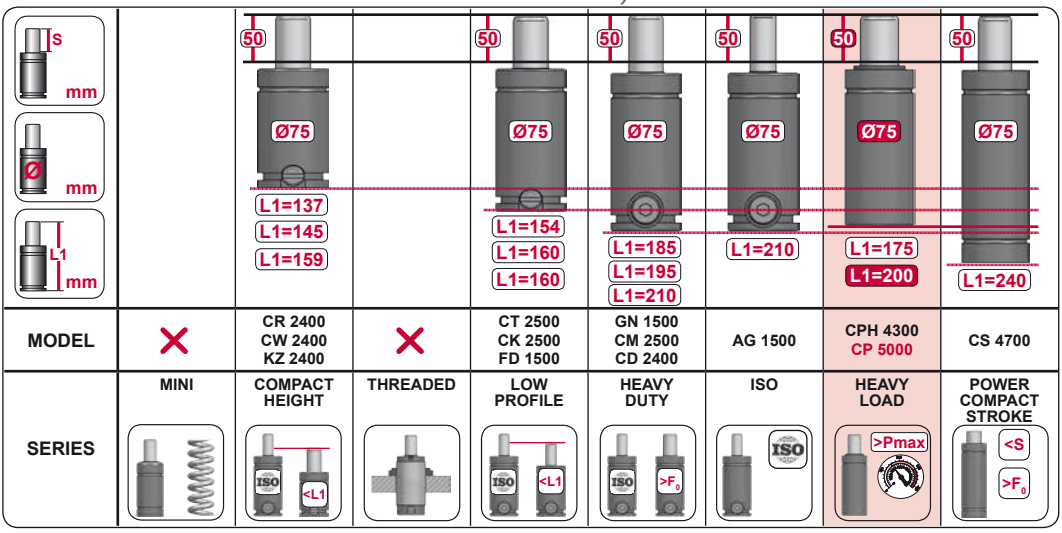


| | | | | | | | | |
|---|---|---|---|---|---|---|---|---|
| **MODEL** | ✕ | CR 2400<br>CW 2400<br>KZ 2400 | ✕ | CT 2500<br>CK 2500<br>FD 1500 | GN 1500<br>CM 2500<br>CD 2400 | AG 1500 | CPH 4300<br>CP 5000 | CS 4700 |
| **SERIES** | MINI | COMPACT HEIGHT | THREADED | LOW PROFILE | HEAVY DUTY | ISO | HEAVY LOAD | POWER COMPACT STROKE |

## A14-075

ISO E24.54.815.G EM24.54.700/F

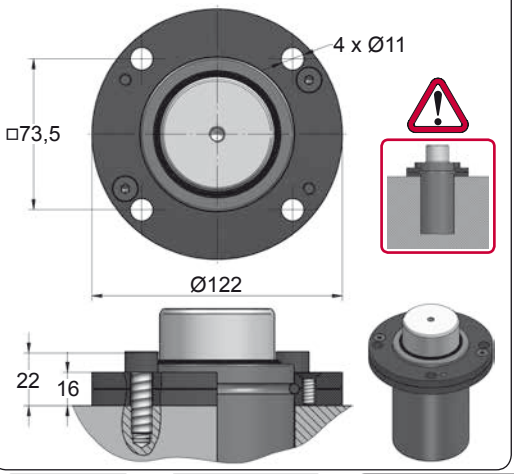


## A34-075

ISO VDI

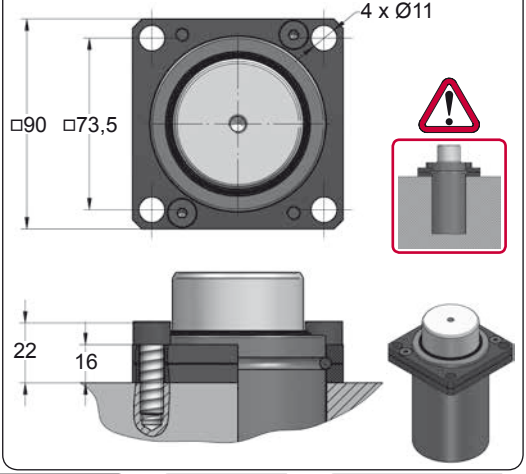





| CODE | CP 5000 050 | ✕ | A14-075 | 08 GA 2 |
|---|---|---|---|---|
| ENG ORDER | GAS SPRING | REPAIR KIT | FLANGE | CHARGING ADAPTER |
| DEU BESTELLUNG | GASDRUCKFEDER | ERSATZTEILSATZ | FLANSCHE | LADEADAPTER |
| FRA COMMANDE | RESSORT À GAZ | KIT DE RÉPARATION | BRIDE | RACCORD DE CHARGE |
| ITA ORDINE | CILINDRO AD AZOTO | KIT DI MANUTENZIONE | FLANGE | ADATTATORE DI CARICO |
| ESP PEDIDO | RESORTE DE GAS | KIT DE REPARACION | BRIDA | ADAPTADOR DE CARGA |
| POR PEDIDO | CILINDRO DE GÁS | KIT DE MANUTENÇÃO | FLANGE | ADAPTADOR DE CARGA |

# CP 5000 V1

*Heavy Load*

AZOL GAS

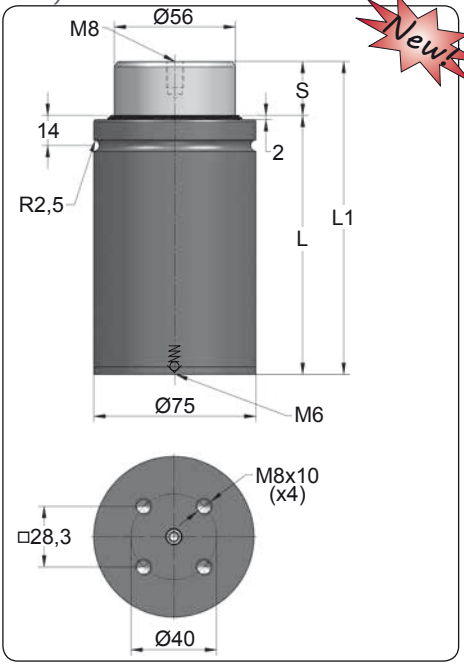


Newt

| ORDER | S (mm) | L1 ±0,25 (mm) | L (mm) | Kg. |
|---|---|---|---|---|
| CP 5000 010 V1 | 10 | 100 | 90 | 2.43 |
| CP 5000 015 V1 | 15 | 125 | 110 | 2.69 |
| CP 5000 025 V1 | 25 | 145 | 120 | 2.91 |
| CP 5000 038 V1 | 38 | 175 | 137 | 3.24 |
| CP 5000 050 V1 | 50 | 200 | 150 | 3.51 |
| CP 5000 063 V1 | 63 | 240 | 177 | 3.94 |
| CP 5000 080 V1 | 80 | 275 | 195 | 4.33 |

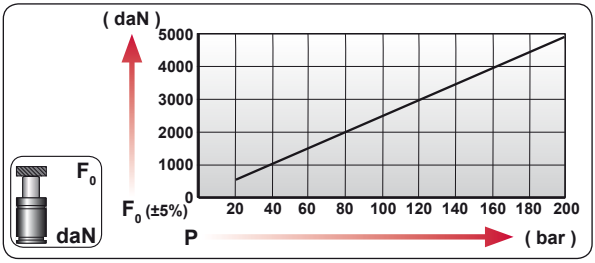


| CODE | bar | psi | $F_0$ daN | $F_1$ daN |
|---|---|---|---|---|
| CP 5000 050 V1 | 200 | 2900 | 4925 | 7890 |
| --------- | --- | --- | --- | --- |

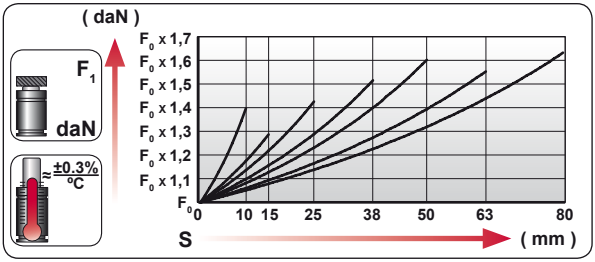


| | |
|---|---|
| ENG | ORDER |
| DEU | BESTELLUNG |
| FRA | COMMANDE |
| ITA | ORDINE |
| ESP | PEDIDO |
| POR | PEDIDO |

$F_0$ daN — S mm

CP 5000 50

CP 5000 050 V1

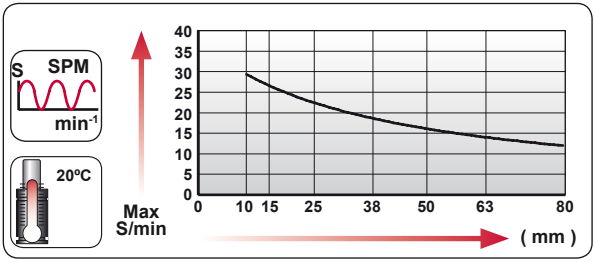


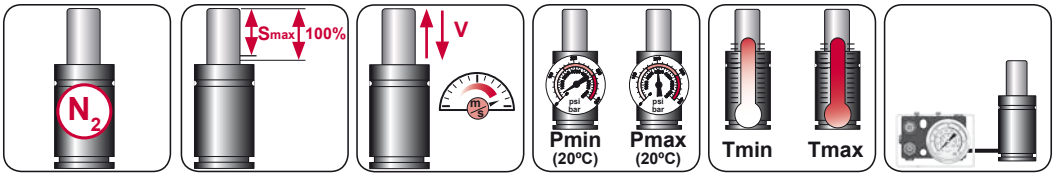


| $N_2$ | Smax < 90% | Vmax 0,5 m/s | bar psi 20 290 | bar psi 200 2900 | ºC ºF 0 32 | ºC ºF 80 176 |
|---|---|---|---|---|---|---|

AZOL GAS

# CP 5000 V1 *MOUNTS*

*Heavy Load*

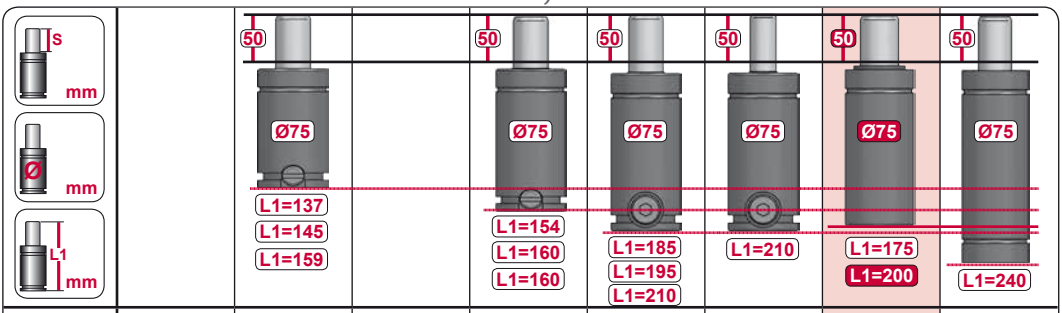


| | | | | | | | | |
|---|---|---|---|---|---|---|---|---|
| **MODEL** | ✕ | CR 2400<br>CW 2400<br>KZ 2400 | ✕ | CT 2500<br>CK 2500<br>FD 1500 | GN 1500<br>CM 2500<br>CD 2400 | AG 1500 | CPH 4300<br>CP 5000 | CS 4700 |
| **SERIES** | MINI | COMPACT HEIGHT | THREADED | LOW PROFILE | HEAVY DUTY | ISO | HEAVY LOAD | POWER COMPACT STROKE |

## A14-075

ISO · E24.54.815.G · EM24.54.700/F

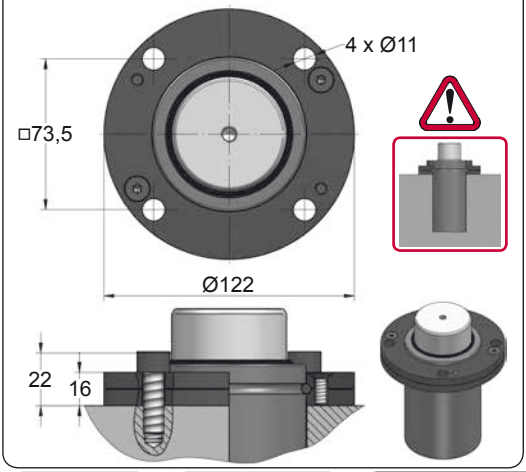


## A34-075

ISO · VDI

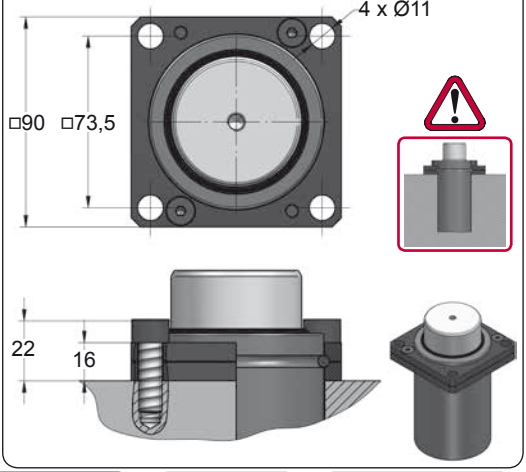









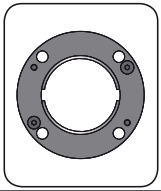

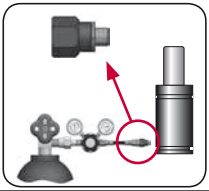

| CODE | | CP 5000 050 V1 | ✕ | A14-075 | 06 GA 11 |
|---|---|---|---|---|---|
| ENG | ORDER | GAS SPRING | REPAIR KIT | FLANGE | CHARGING ADAPTER |
| DEU | BESTELLUNG | GASDRUCKFEDER | ERSATZTEILSATZ | FLANSCHE | LADEADAPTER |
| FRA | COMMANDE | RESSORT À GAZ | KIT DE RÉPARATION | BRIDE | RACCORD DE CHARGE |
| ITA | ORDINE | CILINDRO AD AZOTO | KIT DI MANUTENZIONE | FLANGE | ADATTATORE DI CARICO |
| ESP | PEDIDO | RESORTE DE GAS | KIT DE REPARACION | BRIDA | ADAPTADOR DE CARGA |
| POR | PEDIDO | CILINDRO DE GÁS | KIT DE MANUTENÇÃO | FLANGE | ADAPTADOR DE CARGA |

# CP 8000

*Heavy Load*

AZOL GAS

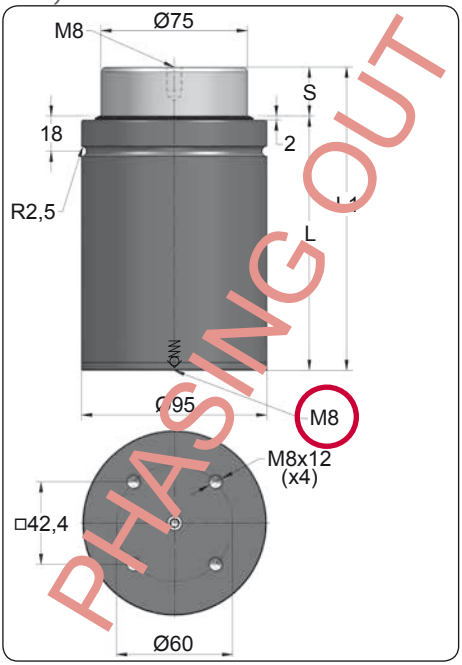


| ORDER | S (mm) | L1 ±0,25 (mm) | L (mm) | Kg. |
|---|---|---|---|---|
| CP 8000 010 | 10 | 110 | 100 | 4.62 |
| CP 8000 015 | 15 | 135 | 120 | 5.06 |
| CP 8000 025 | 25 | 155 | 130 | 5.44 |
| CP 8000 038 | 38 | 185 | 147 | 6.00 |
| CP 8000 050 | 50 | 215 | 165 | 6.56 |
| CP 8000 063 | 63 | 255 | 192 | 7.29 |
| CP 8000 080 | 80 | 290 | 210 | 7.96 |

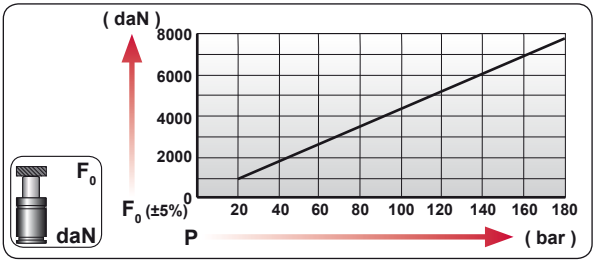


| CODE | bar | psi | F0 daN | F1 daN |
|---|---|---|---|---|
| CP 8000 050 | 180 | 2610 | 7950 | 13530 |
| --------- | --- | --- | --- | --- |

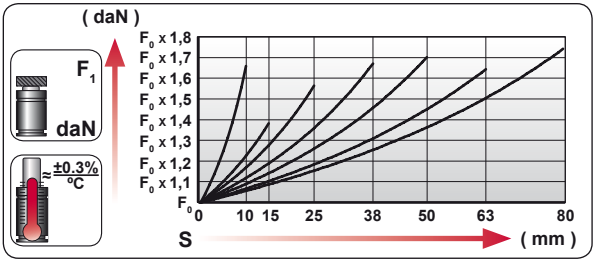


| ENG | ORDER |
|---|---|
| DEU | BESTELLUNG |
| FRA | COMMANDE |
| ITA | ORDINE |
| ESP | PEDIDO |
| POR | PEDIDO |




CP 8000 50

CP 8000 50

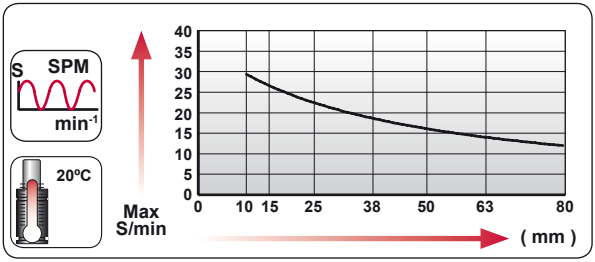


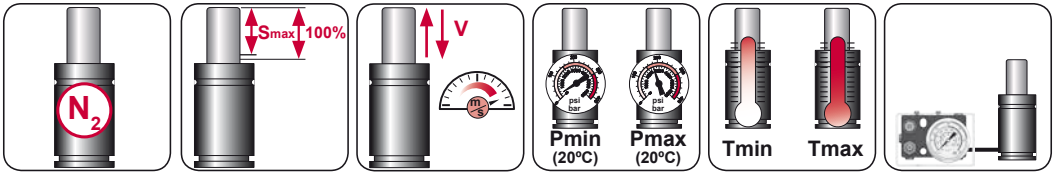


| $N_2$ | Smax < 90% | Vmax 0,5 m/s | bar psi 20 290 | bar psi 180 2610 | ºC ºF 0 32 | ºC ºF 80 176 |
|---|---|---|---|---|---|---|

AZOL GAS

# CP 8000 MOUNTS

*Heavy Load*

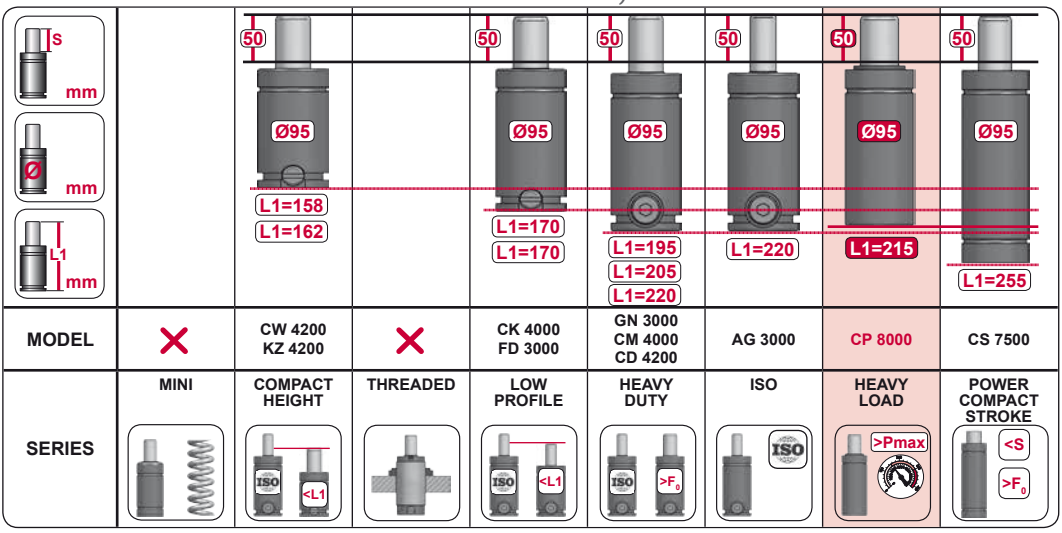


| MODEL | | CW 4200 KZ 4200 | | CK 4000 FD 3000 | GN 3000 CM 4000 CD 4200 | AG 3000 | CP 8000 | CS 7500 |
|---|---|---|---|---|---|---|---|---|
| SERIES | MINI | COMPACT HEIGHT | THREADED | LOW PROFILE | HEAVY DUTY | ISO | HEAVY LOAD | POWER COMPACT STROKE |

## A14-095

ISO E24.54.815.G EM24.54.700/F

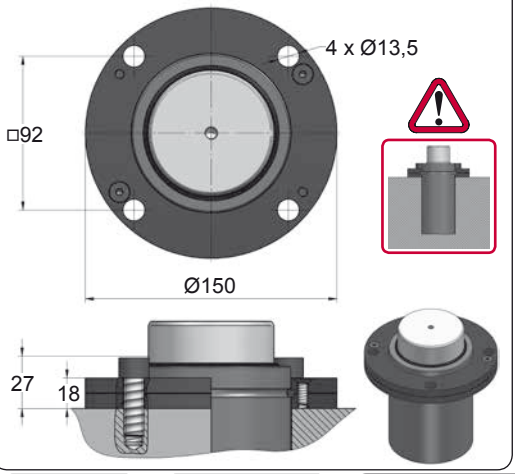


## A34-095

ISO VDI

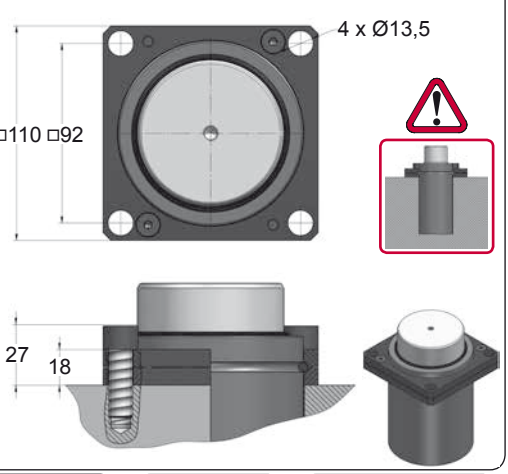









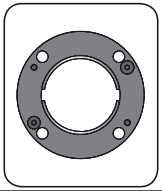

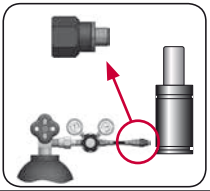

| CODE | | CP 8000 050 | | A14-095 | 08 GA 2 |
|---|---|---|---|---|---|
| ENG | ORDER | GAS SPRING | REPAIR KIT | FLANGE | CHARGING ADAPTER |
| DEU | BESTELLUNG | GASDRUCKFEDER | ERSATZTEILSATZ | FLANSCHE | LADEADAPTER |
| FRA | COMMANDE | RESSORT À GAZ | KIT DE RÉPARATION | BRIDE | RACCORD DE CHARGE |
| ITA | ORDINE | CILINDRO AD AZOTO | KIT DI MANUTENZIONE | FLANGE | ADATTATORE DI CARICO |
| ESP | PEDIDO | RESORTE DE GAS | KIT DE REPARACION | BRIDA | ADAPTADOR DE CARGA |
| POR | PEDIDO | CILINDRO DE GÁS | KIT DE MANUTENÇÃO | FLANGE | ADAPTADOR DE CARGA |

# CP 8000 V1

*Heavy Load*

AZOL GAS

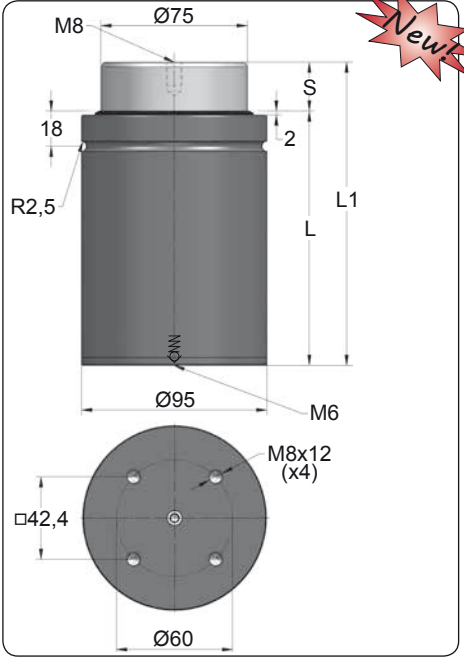


Newt

| ORDER | S (mm) | L1 ±0,25 (mm) | L (mm) | Kg. |
|---|---|---|---|---|
| CP 8000 010 V1 | 10 | 110 | 100 | 4.62 |
| CP 8000 015 V1 | 15 | 135 | 120 | 5.06 |
| CP 8000 025 V1 | 25 | 155 | 130 | 5.44 |
| CP 8000 038 V1 | 38 | 185 | 147 | 6.00 |
| CP 8000 050 V1 | 50 | 215 | 165 | 6.56 |
| CP 8000 063 V1 | 63 | 255 | 192 | 7.29 |
| CP 8000 080 V1 | 80 | 290 | 210 | 7.96 |

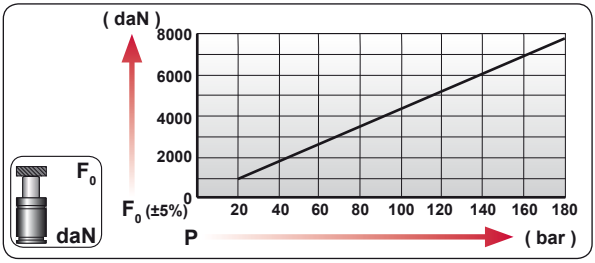


| CODE | bar | psi | $F_0$ daN | $F_1$ daN |
|---|---|---|---|---|
| CP 8000 050 V1 | 180 | 2610 | 7950 | 13530 |
| --------- | --- | --- | --- | --- |

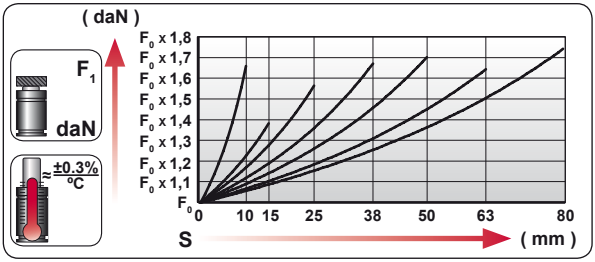


| | |
|---|---|
| ENG | ORDER |
| DEU | BESTELLUNG |
| FRA | COMMANDE |
| ITA | ORDINE |
| ESP | PEDIDO |
| POR | PEDIDO |

$F_0$ daN — S mm

CP 8000 50

CP 8000 050 V1

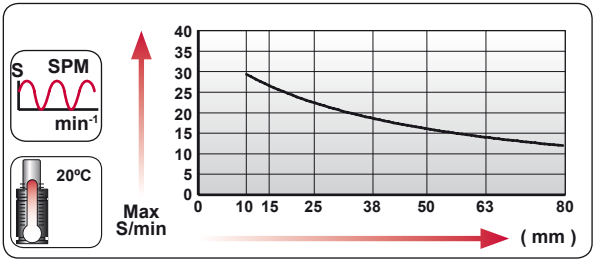


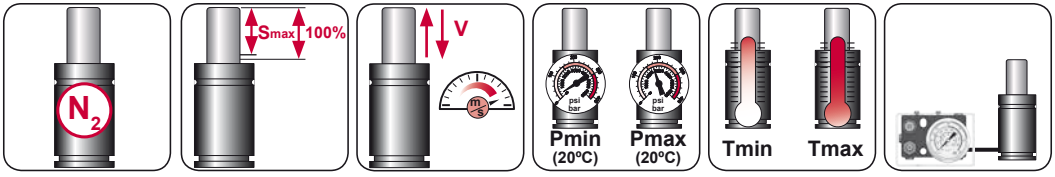


| $N_2$ | Smax < 90% | Vmax 0,5 m/s | bar psi 20 290 | bar psi 180 2610 | ºC ºF 0 32 | ºC ºF 80 176 |
|---|---|---|---|---|---|---|

AZOL GAS

# CP 8000 V1 MOUNTS

*Heavy Load*

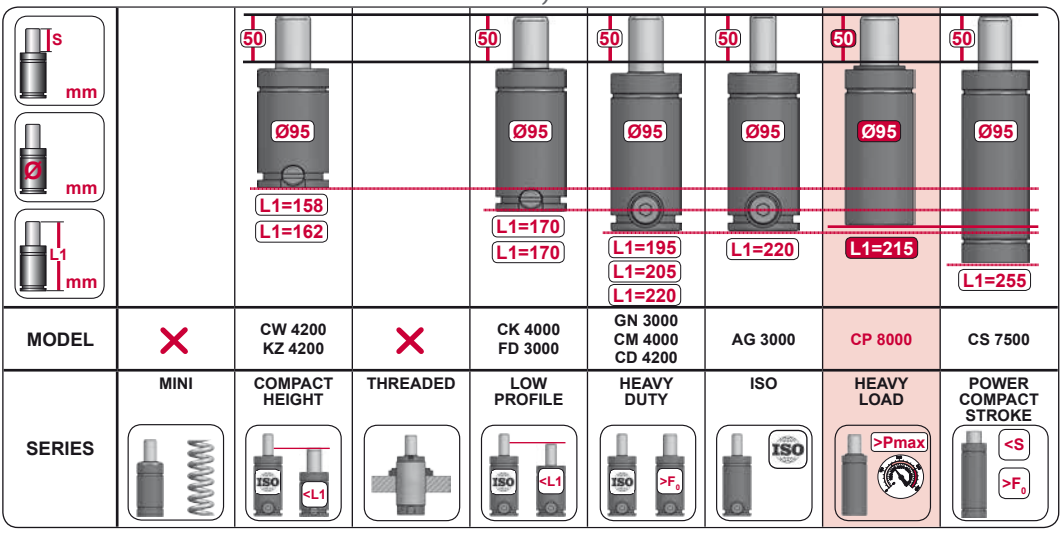


| MODEL | | CW 4200 KZ 4200 | | CK 4000 FD 3000 | GN 3000 CM 4000 CD 4200 | AG 3000 | CP 8000 | CS 7500 |
|---|---|---|---|---|---|---|---|---|
| SERIES | MINI | COMPACT HEIGHT | THREADED | LOW PROFILE | HEAVY DUTY | ISO | HEAVY LOAD | POWER COMPACT STROKE |

## A14-095

ISO · E24.54.815.G · EM24.54.700/F

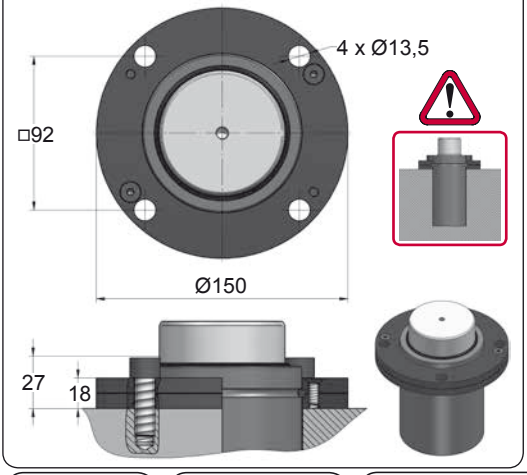


## A34-095

ISO · VDI

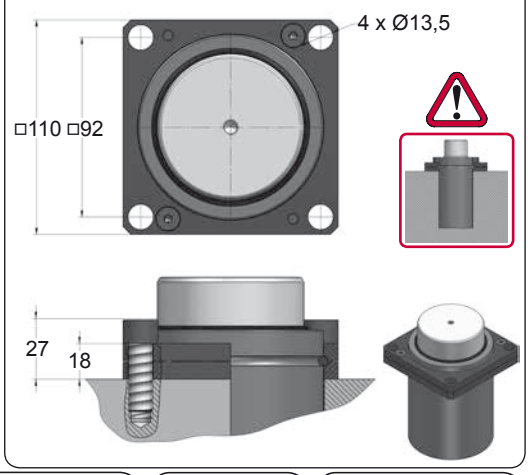









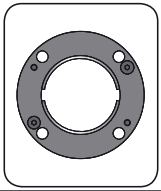

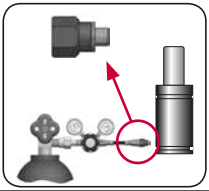

| CODE | | CP 8000 050 V1 | | A14-095 | 06 GA 11 |
|---|---|---|---|---|---|
| ENG | ORDER | GAS SPRING | REPAIR KIT | FLANGE | CHARGING ADAPTER |
| DEU | BESTELLUNG | GASDRUCKFEDER | ERSATZTEILSATZ | FLANSCHE | LADEADAPTER |
| FRA | COMMANDE | RESSORT À GAZ | KIT DE RÉPARATION | BRIDE | RACCORD DE CHARGE |
| ITA | ORDINE | CILINDRO AD AZOTO | KIT DI MANUTENZIONE | FLANGE | ADATTATORE DI CARICO |
| ESP | PEDIDO | RESORTE DE GAS | KIT DE REPARACION | BRIDA | ADAPTADOR DE CARGA |
| POR | PEDIDO | CILINDRO DE GÁS | KIT DE MANUTENÇÃO | FLANGE | ADAPTADOR DE CARGA |

AZOL GAS

# CPH HEAVY LOAD MEDIUM

| MODEL | $F_0$ | Ø | S | L1 | Pmax | Charge Port | | |
|---|---|---|---|---|---|---|---|---|
| CPH 850 | 850 | Ø38 | 12 - 80 | 74 - 225 | 175 | M6 | X | X |
| CPH 1250 | 1250 | Ø45 | 12 - 80 | 79 - 230 | 175 | M6 | X | X |
| CPH 1700 | 1700 | Ø50 | 12 - 80 | 84 - 235 | 175 | M6 | X | X |
| CPH 2800 | 2800 | Ø63 | 12 - 80 | 94 - 250 | 175 | M6 | X | X |
| CPH 4300 | 4300 | Ø75 | 12 - 80 | 94 - 250 | 175 | M6 | X | X |

| S mm / Ø mm / L1 mm | | | | | | | | |
|---|---|---|---|---|---|---|---|---|
| | | 50 Ø50 L1=131 L1=138 L1=152 | 50 Ø50 L1=138 | 50 Ø50 L1=138 L1=150 L1=150 | 50 Ø50 L1=170 L1=185 L1=195 | 50 Ø50 L1=195 | 50 Ø50 L1=165 L1=190 | 50 Ø50 L1=220 |
| $F_0$ daN | | 1000 1000 1000 | 1000 | 1000 1000 750 | 750 1000 1000 | 750 | 1700 2000 | 1800 |
| MODEL | X | CR 1000 CW 1000 KZ 1000 | AS 1000 | CT 1000 CK 1000 FD 750 | GN 750 CM 1000 CD 1000 | AG 750 | CPH 1700 CP 2000 | CS 1800 |
| SERIES | MINI | COMPACT HEIGHT | THREADED | LOW PROFILE | HEAVY DUTY | ISO | HEAVY LOAD | POWER COMPACT STROKE |

# CPH 850

*Heavy Load*

AZOL GAS

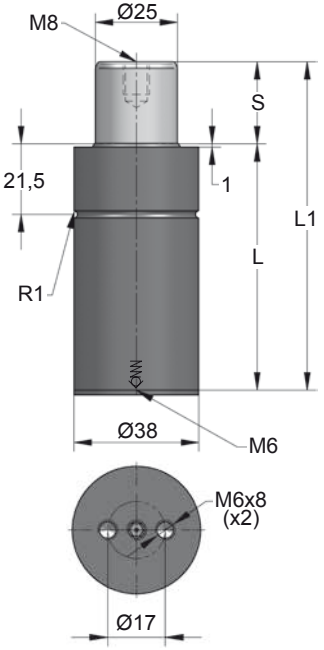


| ORDER | S (mm) | L1 ±0,25 (mm) | L (mm) | Kg. |
|---|---|---|---|---|
| CPH 850 012 | 12 | 74 | 62 | 0.41 |
| CPH 850 025 | 25 | 100 | 75 | 0.48 |
| CPH 850 038 | 38 | 130 | 92 | 0.56 |
| CPH 850 050 | 50 | 155 | 105 | 0.63 |
| CPH 850 063 | 63 | 185 | 122 | 0.70 |
| CPH 850 080 | 80 | 225 | 145 | 0.81 |

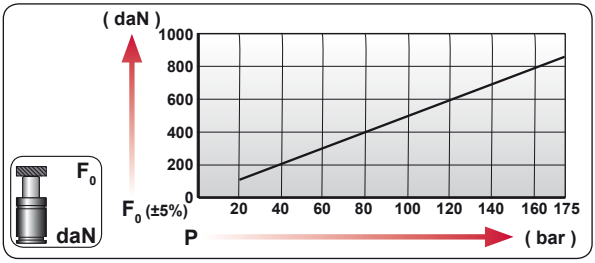


| CODE | | bar | psi | F0 daN | F1 daN |
|---|---|---|---|---|---|
| CPH 850 050 | | 165 | 2395 | 810 | 1420 |
| --------- | | --- | --- | --- | --- |

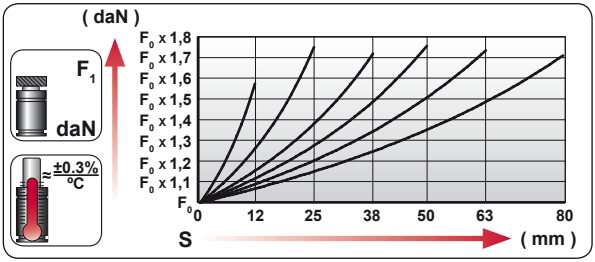


| | |
|---|---|
| ENG | ORDER |
| DEU | BESTELLUNG |
| FRA | COMMANDE |
| ITA | ORDINE |
| ESP | PEDIDO |
| POR | PEDIDO |

F0 daN S mm

CPH 850 50

CPH 850 050

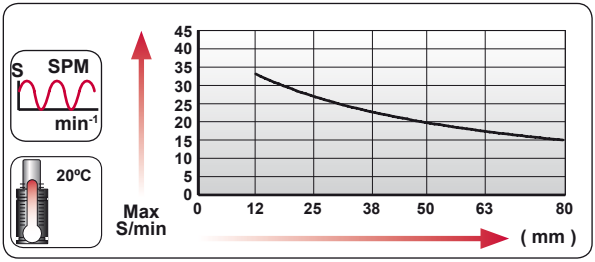


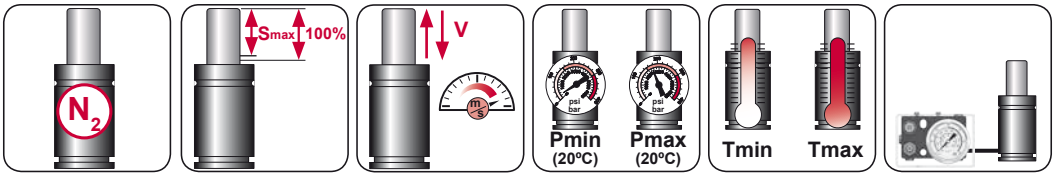


| $N_2$ | Smax < 90% | Vmax 0,5 m/s | bar psi 20 290 | bar psi 175 2540 | ºC ºF 0 32 | ºC ºF 80 176 | |
|---|---|---|---|---|---|---|---|

AZOL GAS

# CPH 850 MOUNTS

*Heavy Load*

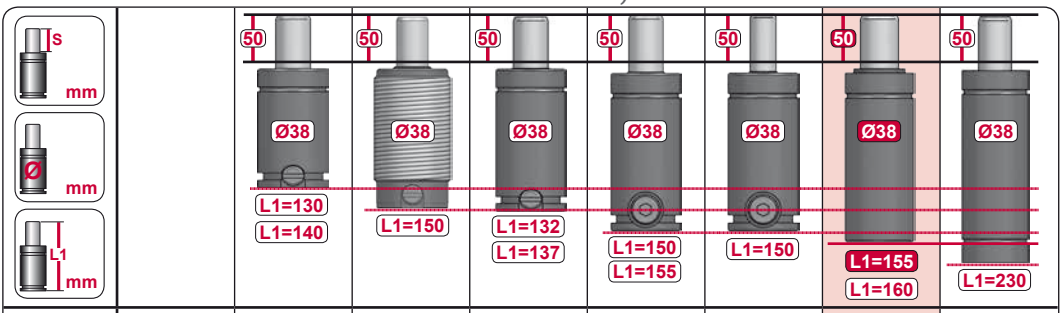


| MODEL | | CW 500 KZ 500 | AS 300 | CT 550 CK 570 | CM 500 CD 500 | APFA 250 | CPH 850 CP 1000 | CS 1000 |
|---|---|---|---|---|---|---|---|---|
| SERIES | MINI | COMPACT HEIGHT | THREADED | LOW PROFILE | HEAVY DUTY | ISO | HEAVY LOAD | POWER COMPACT STROKE |

## A14-038

E24.54.815.G
EM24.54.700/F

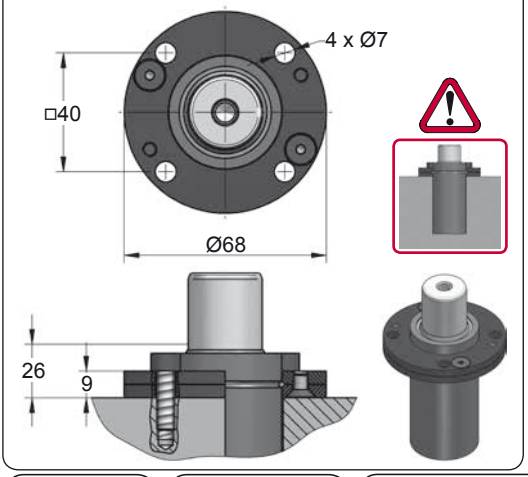


## A34-038

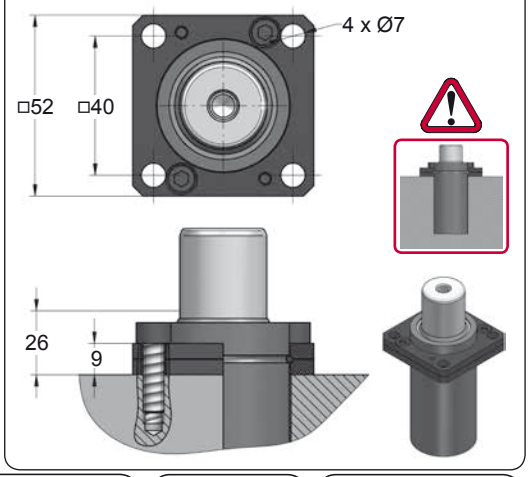





| CODE | | CPH 850 050 | | A14-038 | 06 GA 11 |
|---|---|---|---|---|---|
| ENG | ORDER | GAS SPRING | REPAIR KIT | FLANGE | CHARGING ADAPTER |
| DEU | BESTELLUNG | GASDRUCKFEDER | ERSATZTEILSATZ | FLANSCHE | LADEADAPTER |
| FRA | COMMANDE | RESSORT À GAZ | KIT DE RÉPARATION | BRIDE | RACCORD DE CHARGE |
| ITA | ORDINE | CILINDRO AD AZOTO | KIT DI MANUTENZIONE | FLANGE | ADATTATORE DI CARICO |
| ESP | PEDIDO | RESORTE DE GAS | KIT DE REPARACION | BRIDA | ADAPTADOR DE CARGA |
| POR | PEDIDO | CILINDRO DE GÁS | KIT DE MANUTENÇÃO | FLANGE | ADAPTADOR DE CARGA |

# CPH 1250

*Heavy Load*

AZOL GAS

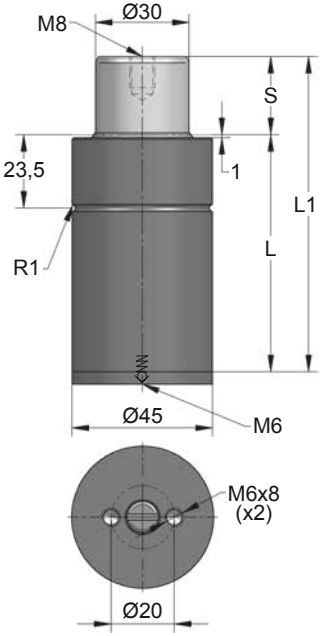


| ORDER | S (mm) | L1 ±0,25 (mm) | L (mm) | Kg. |
|---|---|---|---|---|
| CPH 1250 012 | 12 | 79 | 67 | 0.65 |
| CPH 1250 025 | 25 | 105 | 80 | 0.75 |
| CPH 1250 038 | 38 | 135 | 97 | 0.86 |
| CPH 1250 050 | 50 | 160 | 110 | 0.95 |
| CPH 1250 063 | 63 | 190 | 127 | 1.07 |
| CPH 1250 080 | 80 | 230 | 150 | 1.22 |

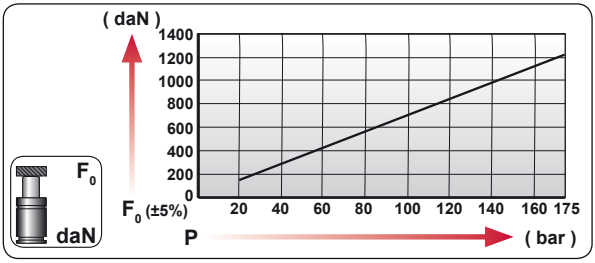


| CODE | bar | psi | F0 daN | F1 daN |
|---|---|---|---|---|
| CPH 1250 050 | 170 | 2465 | 1200 | 2150 |
| --------- | --- | --- | --- | --- |

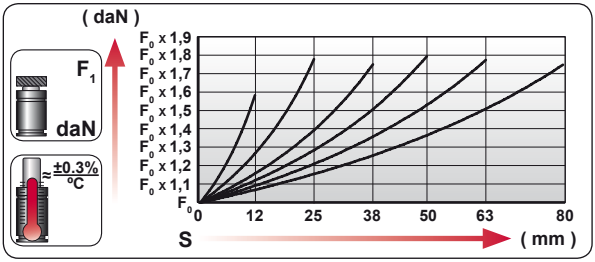


| | |
|---|---|
| ENG | ORDER |
| DEU | BESTELLUNG |
| FRA | COMMANDE |
| ITA | ORDINE |
| ESP | PEDIDO |
| POR | PEDIDO |




CPH 1250 50

CPH 1250 050

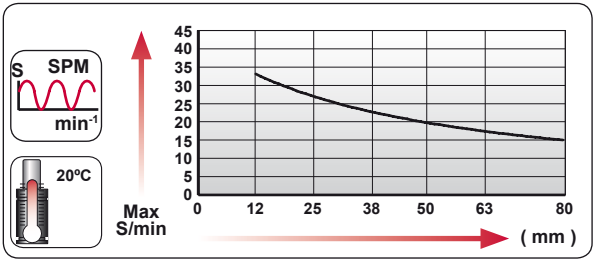


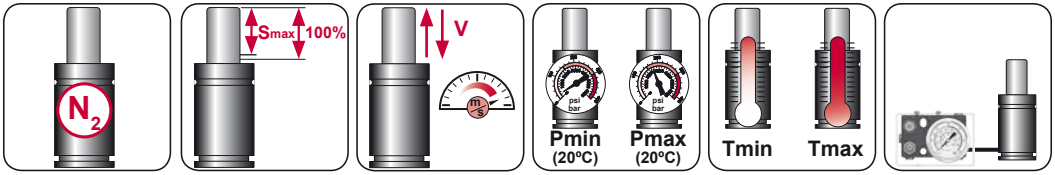


| $N_2$ | Smax < 90% | Vmax 0,5 m/s | bar psi 20 290 | bar psi 175 2540 | ºC ºF 0 32 | ºC ºF 80 176 |
|---|---|---|---|---|---|---|

AZOL GAS

# CPH 1250 MOUNTS

*Heavy Load*

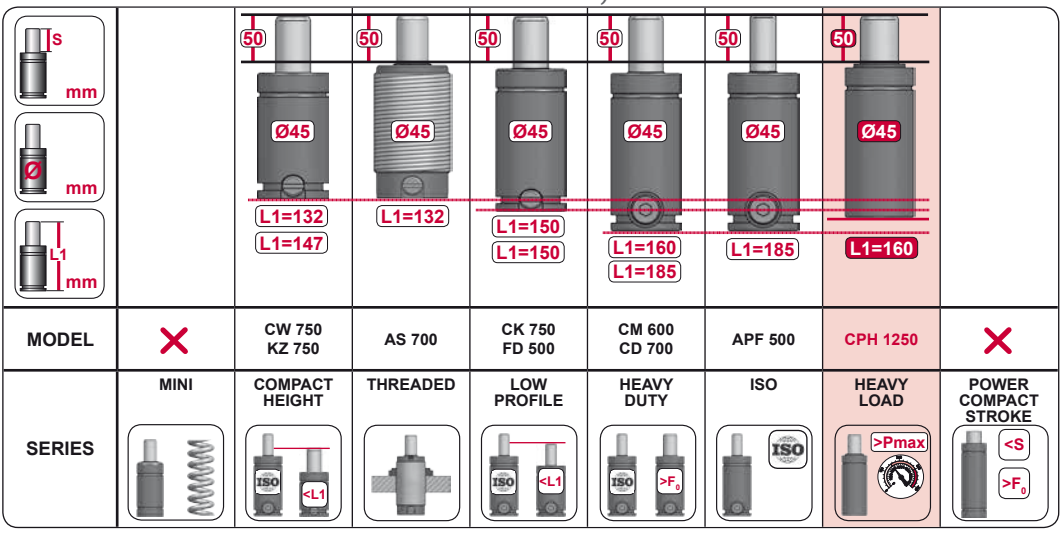


| MODEL | ✕ | CW 750 KZ 750 | AS 700 | CK 750 FD 500 | CM 600 CD 700 | APF 500 | CPH 1250 | ✕ |
|---|---|---|---|---|---|---|---|---|
| SERIES | MINI | COMPACT HEIGHT | THREADED | LOW PROFILE | HEAVY DUTY | ISO | HEAVY LOAD | POWER COMPACT STROKE |

## A14-045

ISO · E24.54.815.G · EM24.54.700/F

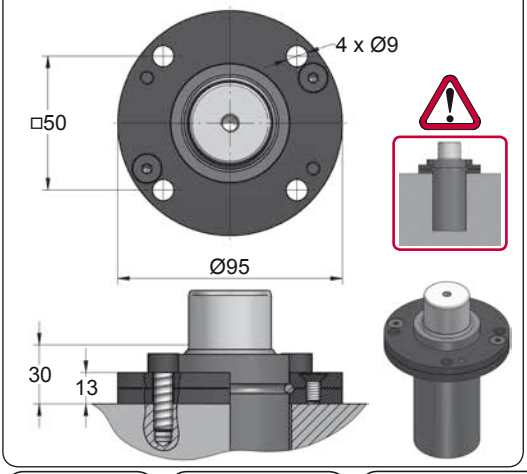


## A34-045

ISO · VDI

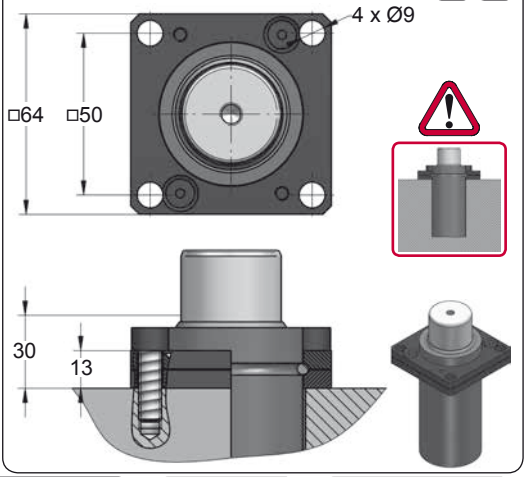









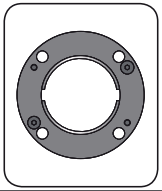

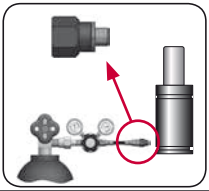

| CODE | | CPH 1250 050 | ✕ | A14-045 | 06 GA 11 |
|---|---|---|---|---|---|
| ENG | ORDER | GAS SPRING | REPAIR KIT | FLANGE | CHARGING ADAPTER |
| DEU | BESTELLUNG | GASDRUCKFEDER | ERSATZTEILSATZ | FLANSCHE | LADEADAPTER |
| FRA | COMMANDE | RESSORT À GAZ | KIT DE RÉPARATION | BRIDE | RACCORD DE CHARGE |
| ITA | ORDINE | CILINDRO AD AZOTO | KIT DI MANUTENZIONE | FLANGE | ADATTATORE DI CARICO |
| ESP | PEDIDO | RESORTE DE GAS | KIT DE REPARACION | BRIDA | ADAPTADOR DE CARGA |
| POR | PEDIDO | CILINDRO DE GÁS | KIT DE MANUTENÇÃO | FLANGE | ADAPTADOR DE CARGA |

# CPH 1700

*Heavy Load*

AZOL GAS

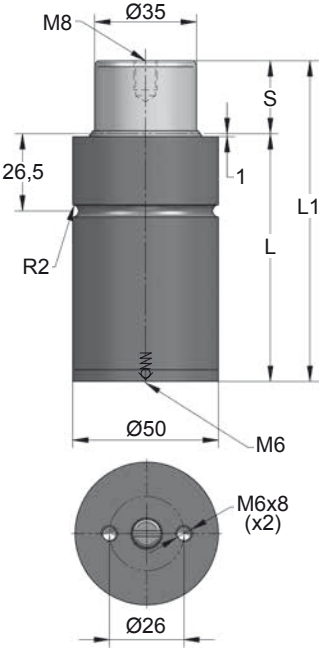


| ORDER | S (mm) | L1 ±0,25 (mm) | L (mm) | Kg. |
|---|---|---|---|---|
| CPH 1700 012 | 12 | 84 | 72 | 0.91 |
| CPH 1700 025 | 25 | 110 | 85 | 1.05 |
| CPH 1700 038 | 38 | 140 | 102 | 1.21 |
| CPH 1700 050 | 50 | 165 | 115 | 1.34 |
| CPH 1700 063 | 63 | 195 | 132 | 1.50 |
| CPH 1700 080 | 80 | 235 | 155 | 1.71 |

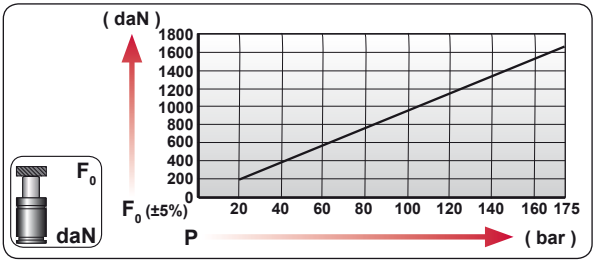


| CODE | bar | psi | $F_0$ daN | $F_1$ daN |
|---|---|---|---|---|
| CPH 1700 050 | 170 | 2465 | 1635 | 3430 |
| --------- | --- | --- | --- | --- |

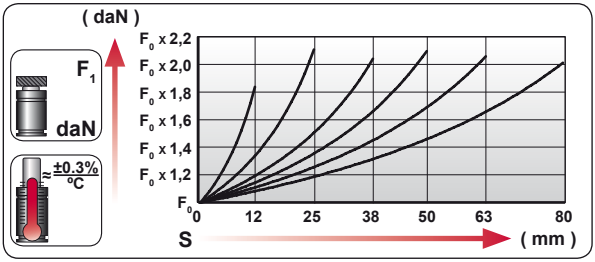


| | |
|---|---|
| ENG | ORDER |
| DEU | BESTELLUNG |
| FRA | COMMANDE |
| ITA | ORDINE |
| ESP | PEDIDO |
| POR | PEDIDO |




CPH 1700 50

CPH 1700 050

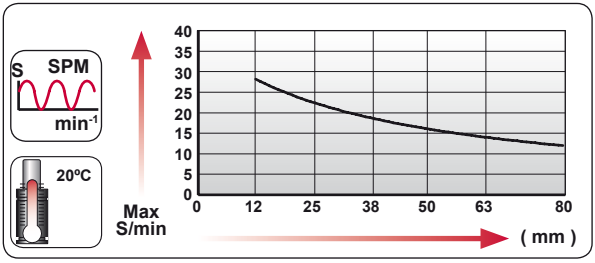


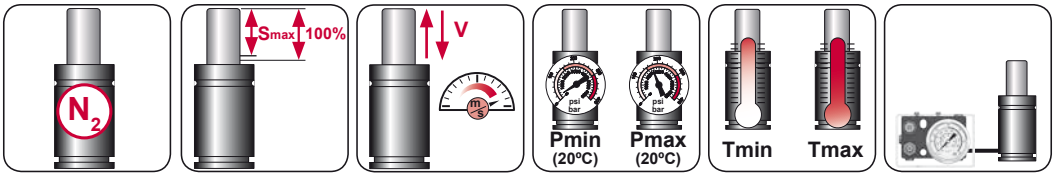


| $N_2$ | Smax < 90% | Vmax 0,5 m/s | bar psi 20 290 | bar psi 175 2540 | ºC ºF 0 32 | ºC ºF 80 176 |
|---|---|---|---|---|---|---|

AZOL GAS

# CPH 1700 MOUNTS

*Heavy Load*

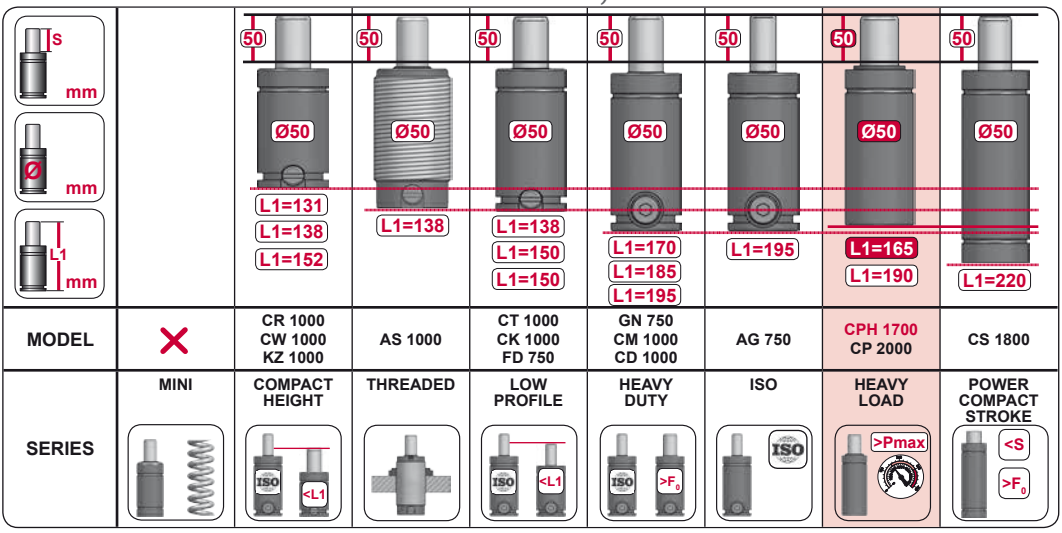


| MODEL | | CR 1000 CW 1000 KZ 1000 | AS 1000 | CT 1000 CK 1000 FD 750 | GN 750 CM 1000 CD 1000 | AG 750 | CPH 1700 CP 2000 | CS 1800 |
|---|---|---|---|---|---|---|---|---|
| SERIES | MINI | COMPACT HEIGHT | THREADED | LOW PROFILE | HEAVY DUTY | ISO | HEAVY LOAD | POWER COMPACT STROKE |

## A14-050

ISO E24.54.815.G EM24.54.700/F

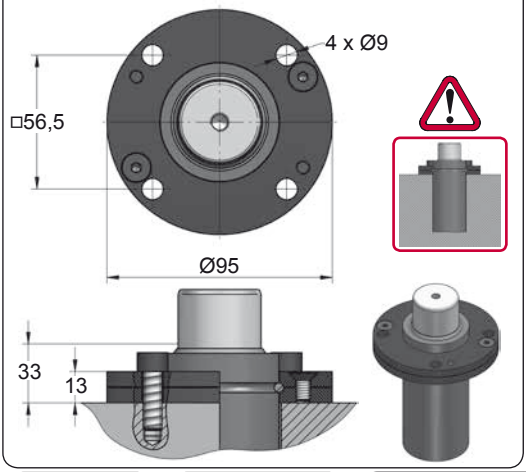


## A34-050

ISO VDI

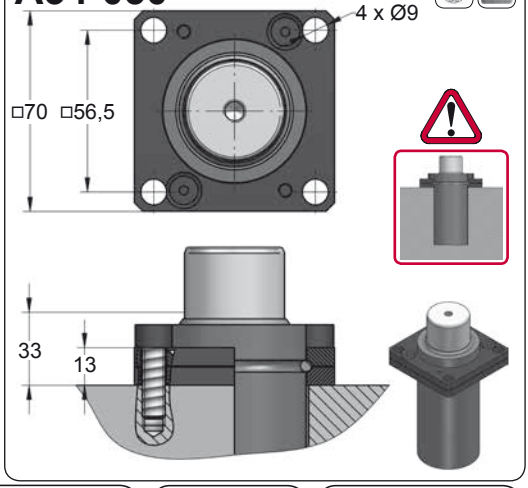









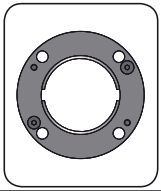

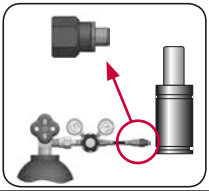

| CODE | | CPH 1700 050 | | A14-050 | 06 GA 11 |
|---|---|---|---|---|---|
| ENG | ORDER | GAS SPRING | REPAIR KIT | FLANGE | CHARGING ADAPTER |
| DEU | BESTELLUNG | GASDRUCKFEDER | ERSATZTEILSATZ | FLANSCHE | LADEADAPTER |
| FRA | COMMANDE | RESSORT À GAZ | KIT DE RÉPARATION | BRIDE | RACCORD DE CHARGE |
| ITA | ORDINE | CILINDRO AD AZOTO | KIT DI MANUTENZIONE | FLANGE | ADATTATORE DI CARICO |
| ESP | PEDIDO | RESORTE DE GAS | KIT DE REPARACION | BRIDA | ADAPTADOR DE CARGA |
| POR | PEDIDO | CILINDRO DE GÁS | KIT DE MANUTENÇÃO | FLANGE | ADAPTADOR DE CARGA |

# CPH 2800

*Heavy Load*

AZOL GAS

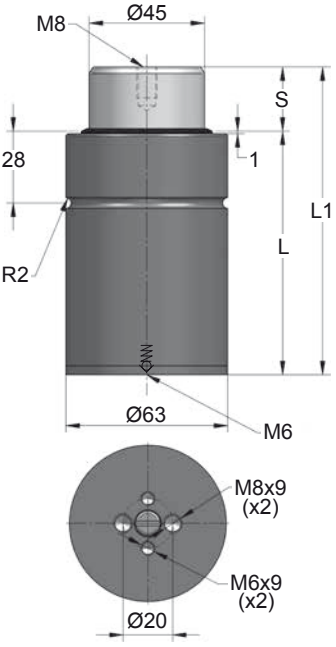


| ORDER | S (mm) | L1 ±0,25 (mm) | L (mm) | Kg. |
|---|---|---|---|---|
| CPH 2800 012 | 12 | 94 | 82 | 1.58 |
| CPH 2800 025 | 25 | 120 | 95 | 1.80 |
| CPH 2800 038 | 38 | 150 | 112 | 2.05 |
| CPH 2800 050 | 50 | 175 | 125 | 2.26 |
| CPH 2800 063 | 63 | 210 | 147 | 2.56 |
| CPH 2800 080 | 80 | 250 | 170 | 2.90 |

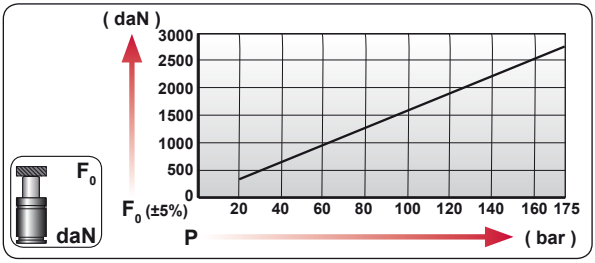


| CODE | bar | psi | $F_0$ daN | $F_1$ daN |
|---|---|---|---|---|
| CPH 2800 050 | 170 | 2465 | 2700 | 5260 |
| --------- | --- | --- | --- | --- |

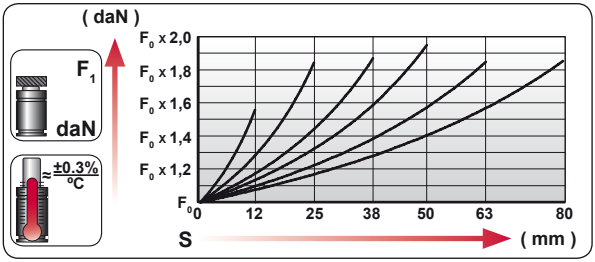


| | |
|---|---|
| ENG | ORDER |
| DEU | BESTELLUNG |
| FRA | COMMANDE |
| ITA | ORDINE |
| ESP | PEDIDO |
| POR | PEDIDO |

$F_0$ daN — S mm

CPH 2800 50

CPH 2800 050

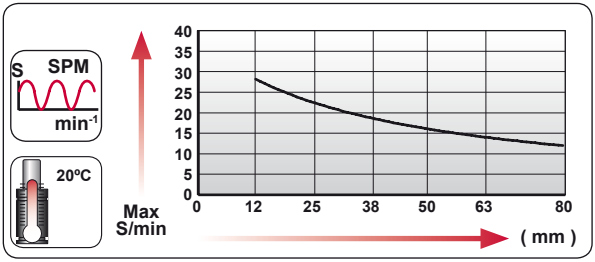


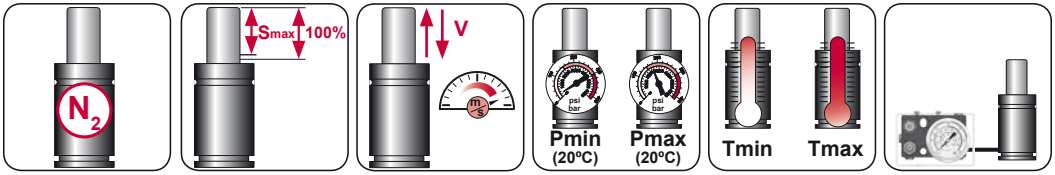


| $N_2$ | Smax < 90% | Vmax 0,5 m/s | bar psi 20 290 | bar psi 175 2540 | ºC ºF 0 32 | ºC ºF 80 176 | |
|---|---|---|---|---|---|---|---|

AZOL GAS

# CPH 2800 MOUNTS

*Heavy Load*

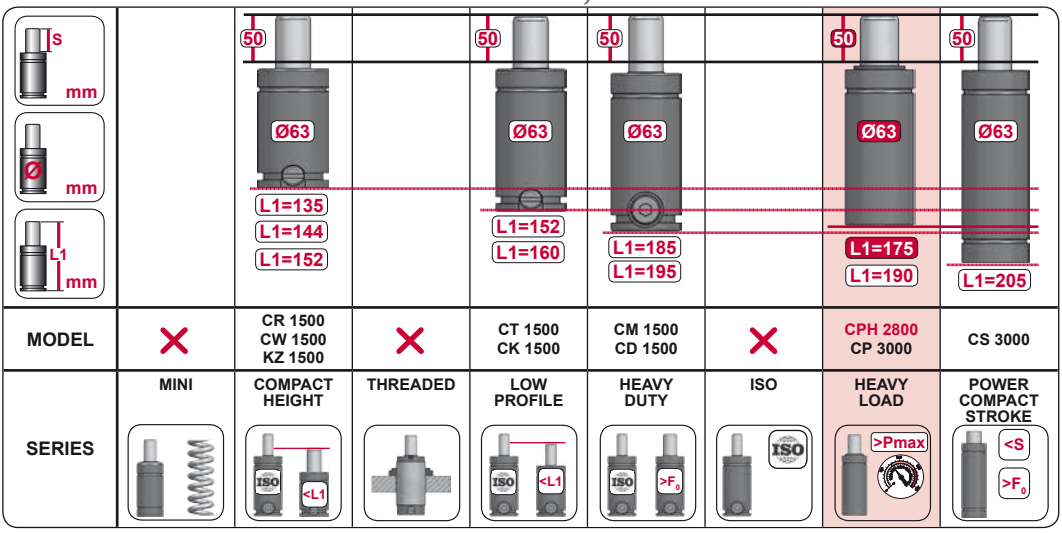


| MODEL | | CR 1500 CW 1500 KZ 1500 | | CT 1500 CK 1500 | CM 1500 CD 1500 | | CPH 2800 CP 3000 | CS 3000 |
|---|---|---|---|---|---|---|---|---|
| SERIES | MINI | COMPACT HEIGHT | THREADED | LOW PROFILE | HEAVY DUTY | ISO | HEAVY LOAD | POWER COMPACT STROKE |

## A14-063

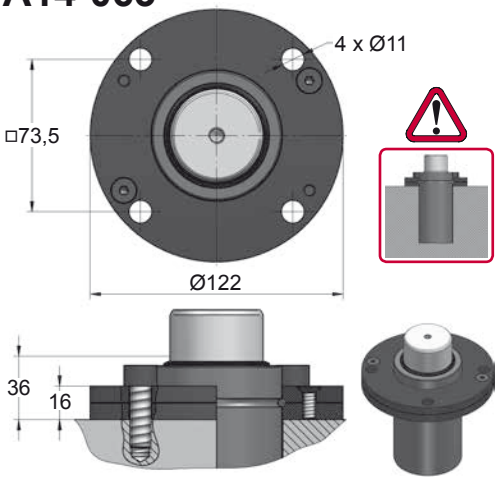


## A39-063

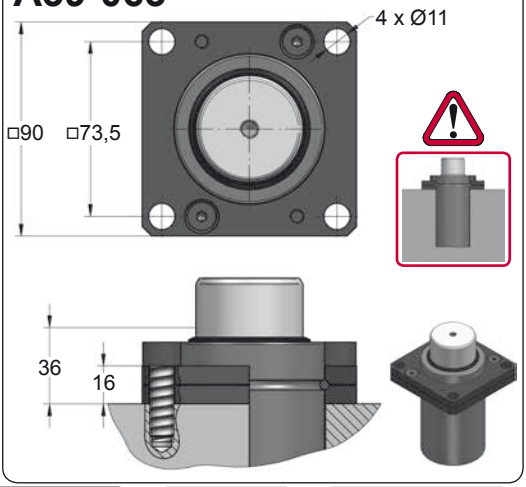





| CODE | | CPH 2800 050 | | A14-063 | 06 GA 11 |
|---|---|---|---|---|---|
| ENG | ORDER | GAS SPRING | REPAIR KIT | FLANGE | CHARGING ADAPTER |
| DEU | BESTELLUNG | GASDRUCKFEDER | ERSATZTEILSATZ | FLANSCHE | LADEADAPTER |
| FRA | COMMANDE | RESSORT À GAZ | KIT DE RÉPARATION | BRIDE | RACCORD DE CHARGE |
| ITA | ORDINE | CILINDRO AD AZOTO | KIT DI MANUTENZIONE | FLANGE | ADATTATORE DI CARICO |
| ESP | PEDIDO | RESORTE DE GAS | KIT DE REPARACION | BRIDA | ADAPTADOR DE CARGA |
| POR | PEDIDO | CILINDRO DE GÁS | KIT DE MANUTENÇÃO | FLANGE | ADAPTADOR DE CARGA |

# CPH 4300

*Heavy Load*

AZOL GAS

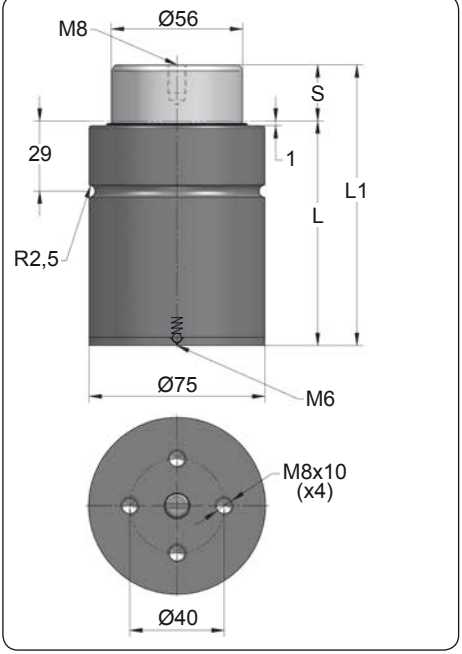


| ORDER | S (mm) | L1 ±0,25 (mm) | L (mm) | Kg. |
|---|---|---|---|---|
| CPH 4300 012 | 12 | 94 | 82 | 2.24 |
| CPH 4300 025 | 25 | 120 | 95 | 2.52 |
| CPH 4300 038 | 38 | 150 | 112 | 2.85 |
| CPH 4300 050 | 50 | 175 | 125 | 3.13 |
| CPH 4300 063 | 63 | 210 | 147 | 3.50 |
| CPH 4300 080 | 80 | 250 | 170 | 3.94 |

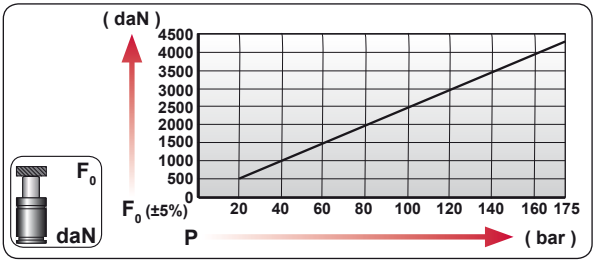


| CODE | bar | psi | $F_0$ daN | $F_1$ daN |
|---|---|---|---|---|
| CPH 4300 050 | 170 | 2465 | 4190 | 8100 |
| --------- | --- | --- | --- | --- |

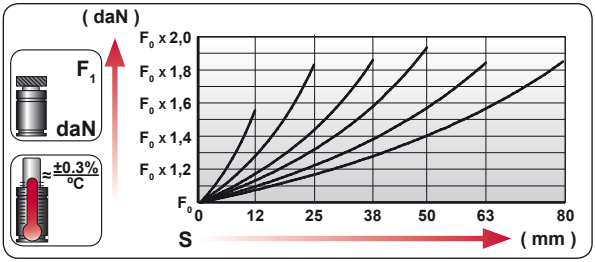


| | |
|---|---|
| ENG | ORDER |
| DEU | BESTELLUNG |
| FRA | COMMANDE |
| ITA | ORDINE |
| ESP | PEDIDO |
| POR | PEDIDO |

$F_0$ daN — S mm

CPH 4300 50

CPH 4300 050

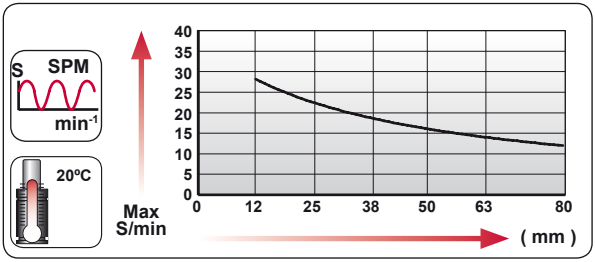


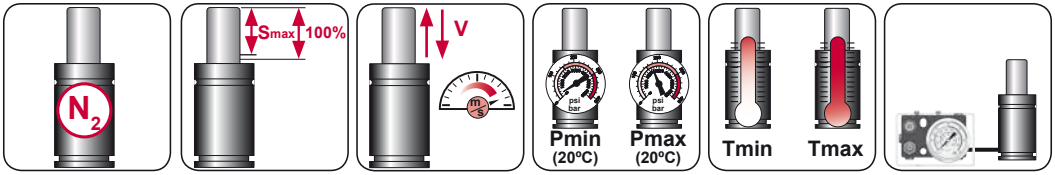


| $N_2$ | Smax < 90% | Vmax 0,5 m/s | bar psi 20 290 | bar psi 175 2540 | ºC ºF 0 32 | ºC ºF 80 176 | |
|---|---|---|---|---|---|---|---|

AZOL GAS

# CPH 4300 MOUNTS

*Heavy Load*

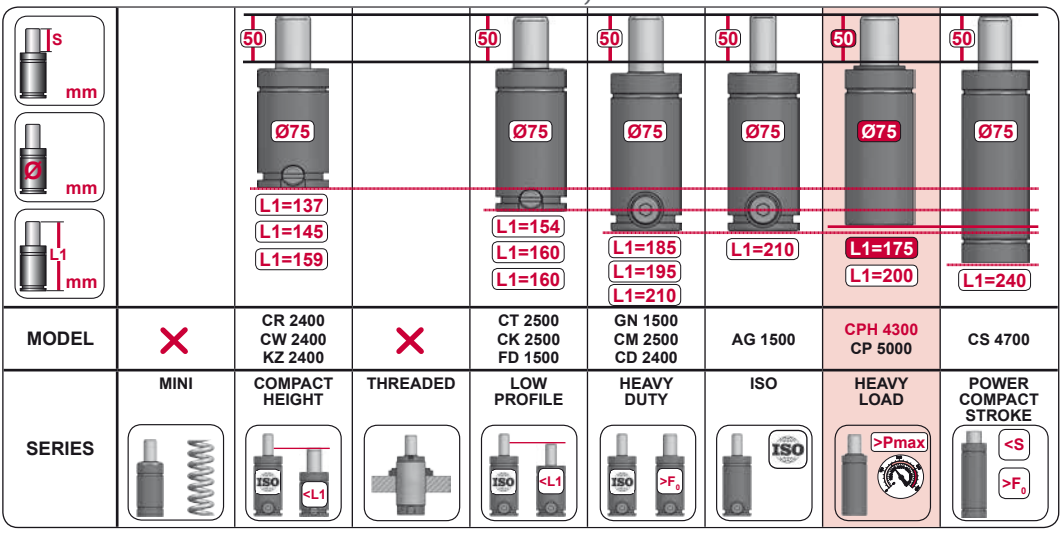


| MODEL | | CR 2400 CW 2400 KZ 2400 | | CT 2500 CK 2500 FD 1500 | GN 1500 CM 2500 CD 2400 | AG 1500 | CPH 4300 CP 5000 | CS 4700 |
|---|---|---|---|---|---|---|---|---|
| SERIES | MINI | COMPACT HEIGHT | THREADED | LOW PROFILE | HEAVY DUTY | ISO | HEAVY LOAD | POWER COMPACT STROKE |

## A14-075

E24.54.815.G
EM24.54.700/F

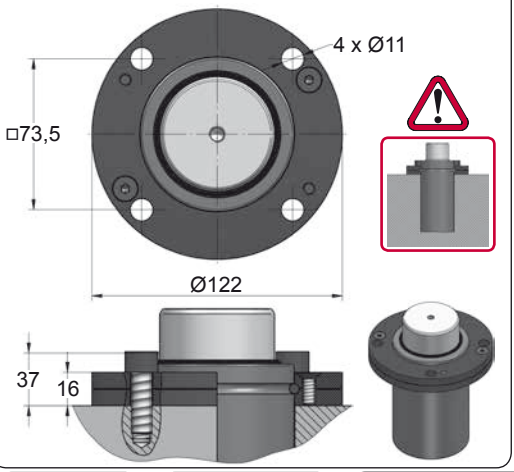


## A34-075

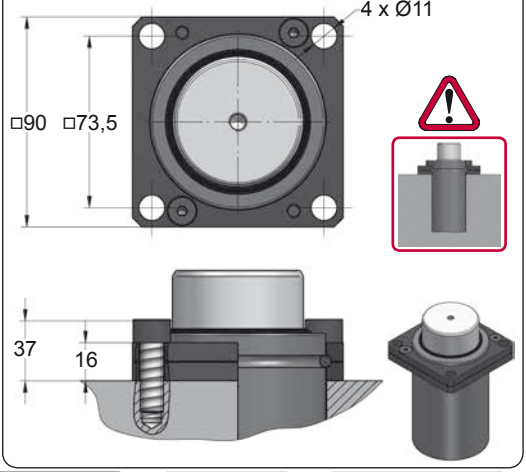





| CODE | | CPH 4300 050 | | A14-075 | 06 GA 11 |
|---|---|---|---|---|---|
| ENG | ORDER | GAS SPRING | REPAIR KIT | FLANGE | CHARGING ADAPTER |
| DEU | BESTELLUNG | GASDRUCKFEDER | ERSATZTEILSATZ | FLANSCHE | LADEADAPTER |
| FRA | COMMANDE | RESSORT À GAZ | KIT DE RÉPARATION | BRIDE | RACCORD DE CHARGE |
| ITA | ORDINE | CILINDRO AD AZOTO | KIT DI MANUTENZIONE | FLANGE | ADATTATORE DI CARICO |
| ESP | PEDIDO | RESORTE DE GAS | KIT DE REPARACION | BRIDA | ADAPTADOR DE CARGA |
| POR | PEDIDO | CILINDRO DE GÁS | KIT DE MANUTENÇÃO | FLANGE | ADAPTADOR DE CARGA |

AZOL GAS

# CS POWER COMPACT STROKE

| MODEL | $F_0$ | Ø | S | L1 | Pmax | Charge Port | | |
|---|---|---|---|---|---|---|---|---|
| CS 420 V1 | 420 | Ø25 | 6 - 50 | 56 - 195 | 165 | M6 | ✗ | ✓ |
| CSE 420 V1 | 420 | Ø25 | 6 - 50 | 56 - 195 | 165 | M6 | ✓ | ✗ |
| CS 770 V2 | 770 | Ø32 | 6 - 50 | 63 - 195 | 150 | M6 | ✗ | ✓ |
| CSE 770 V2 | 770 | Ø32 | 6 - 50 | 63 - 195 | 150 | M6 | ✓ | ✗ |
| CS 1000 V1 | 1000 | Ø38 | 6 - 50 | 61 - 230 | 150 | M6 | ✗ | ✓ |
| CSE 1000 V1 | 1000 | Ø38 | 6 - 50 | 61 - 230 | 150 | G1/8" | ✓ | ✗ |
| CS 1800 V1 | 1800 | Ø50 | 6 - 65 | 66 - 271 | 150 | G1/8" | ✗ | ✓ |
| CSE 1800 V1 | 1800 | Ø50 | 6 - 50 | 66 - 220 | 150 | G1/8" | ✓ | ✗ |
| CS 3000 V2 | 3000 | Ø63 | 10 - 65 | 85 - 256 | 150 | G1/8" | ✗ | ✓ |
| CSE 3000 V2 | 3000 | Ø63 | 10 - 50 | 85 - 205 | 150 | G1/8" | ✓ | ✗ |
| CS 4700 V1 | 4700 | Ø75 | 10 - 65 | 80 - 273 | 150 | G1/8" | ✗ | ✓ |
| CSE 4700 V1 | 4700 | Ø75 | 10 - 50 | 80 - 240 | 150 | G1/8" | ✓ | ✗ |
| CS 7500 V1 | 7500 | Ø95 | 10 - 65 | 90 - 279 | 150 | G1/8" | ✗ | ✓ |
| CSE 7500 V1 | 7500 | Ø95 | 10 - 50 | 90 - 255 | 150 | G1/8" | ✓ | ✗ |
| CS 11800 V1 | 11800 | Ø120 | 10 - 65 | 100 - 320 | 150 | G1/8" | ✗ | ✓ |
| CSE 11800 V1 | 11800 | Ø120 | 10 - 50 | 100 - 260 | 150 | G1/8" | ✓ | ✗ |
| CS 18300 V1 | 18300 | Ø150 | 10 - 65 | 110 - 323 | 150 | G1/8" | ✗ | ✓ |
| CSE 18300 V1 | 18300 | Ø150 | 10 - 50 | 110 - 270 | 150 | G1/8" | ✓ | ✗ |

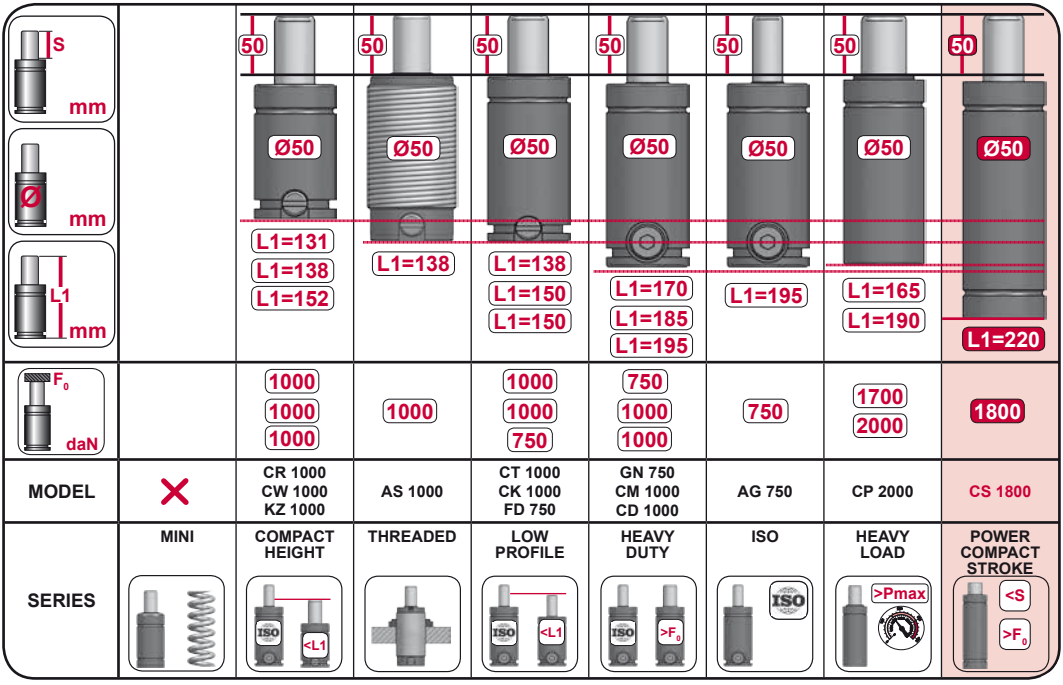

# CS 420

*Power Compact Stroke*

AZOL GAS

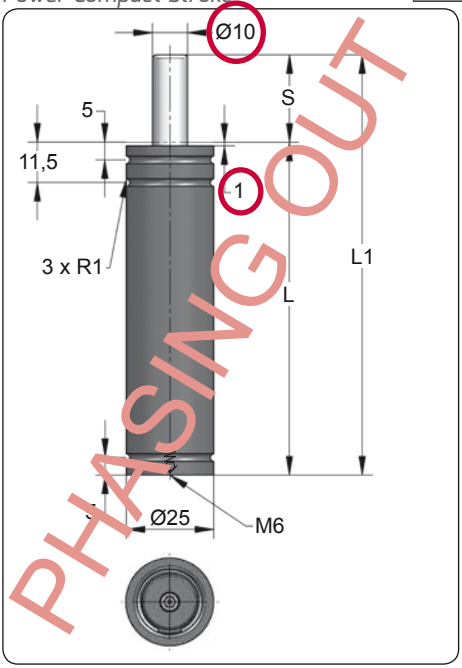


| ORDER | S (mm) | L1 ±0,25 (mm) | L (mm) | Kg. |
|---|---|---|---|---|
| CS 420 006 | 6 | 56 | 50 | 0.15 |
| CS 420 010 | 10 | 70 | 60 | 0.17 |
| CS 420 016 | 16 | 91 | 75 | 0.20 |
| CS 420 025 | 25 | 120 | 95 | 0.24 |
| CS 420 032 | 32 | 140 | 108 | 0.27 |
| CS 420 040 | 40 | 165 | 125 | 0.30 |
| CS 420 050 | 50 | 195 | 145 | 0.35 |

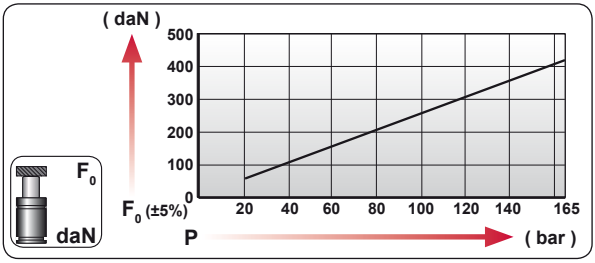


| CODE | bar | psi | F0 daN | F1 daN |
|---|---|---|---|---|
| CS 420 050 | 165 | 2395 | 420 | 740 |
| --------- | --- | --- | --- | --- |

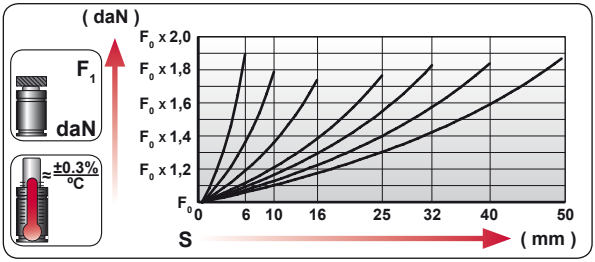


| | |
|---|---|
| ENG | ORDER |
| DEU | BESTELLUNG |
| FRA | COMMANDE |
| ITA | ORDINE |
| ESP | PEDIDO |
| POR | PEDIDO |




CS 420 50

CS 420 050

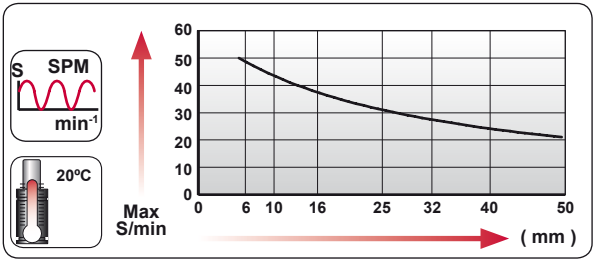


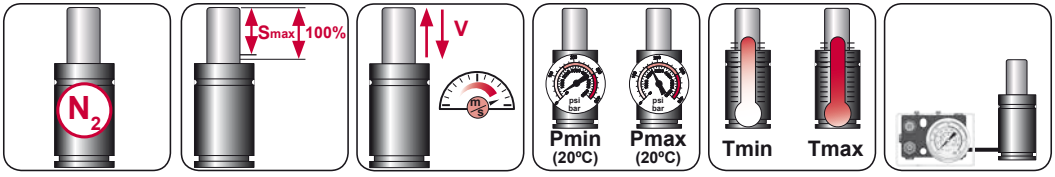


| $N_2$ | Smax < 90% | Vmax 0,5 m/s | bar psi 20 290 | bar psi 165 2395 | ºC ºF 0 32 | ºC ºF 80 176 | |
|---|---|---|---|---|---|---|---|

AZOL GAS

# CS 420 MOUNTS

*Power Compact Stroke*

## A44-025

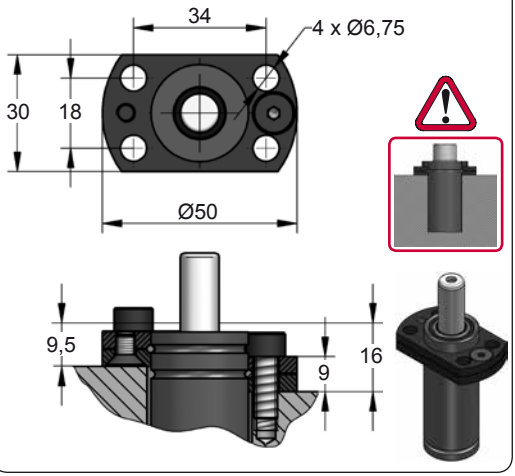


## D02-025

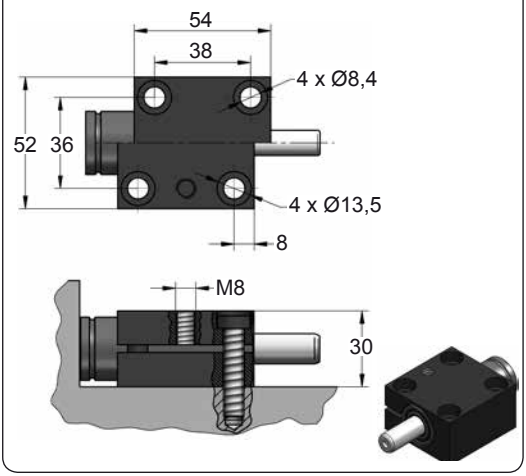









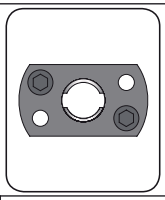

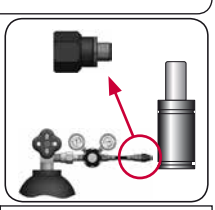

| CODE | | CS 420 050 | KIT XXXXXXX-S | A44-025 | 06 GA 11 |
|---|---|---|---|---|---|
| ENG | ORDER | GAS SPRING | REPAIR KIT | FLANGE | CHARGING ADAPTER |
| DEU | BESTELLUNG | GASDRUCKFEDER | ERSATZTEILSATZ | FLANSCHE | LADEADAPTER |
| FRA | COMMANDE | RESSORT À GAZ | KIT DE RÉPARATION | BRIDE | RACCORD DE CHARGE |
| ITA | ORDINE | CILINDRO AD AZOTO | KIT DI MANUTENZIONE | FLANGE | ADATTATORE DI CARICO |
| ESP | PEDIDO | RESORTE DE GAS | KIT DE REPARACION | BRIDA | ADAPTADOR DE CARGA |
| POR | PEDIDO | CILINDRO DE GÁS | KIT DE MANUTENÇÃO | FLANGE | ADAPTADOR DE CARGA |

# CS 420 V1

*Power Compact Stroke*

AZOL GAS

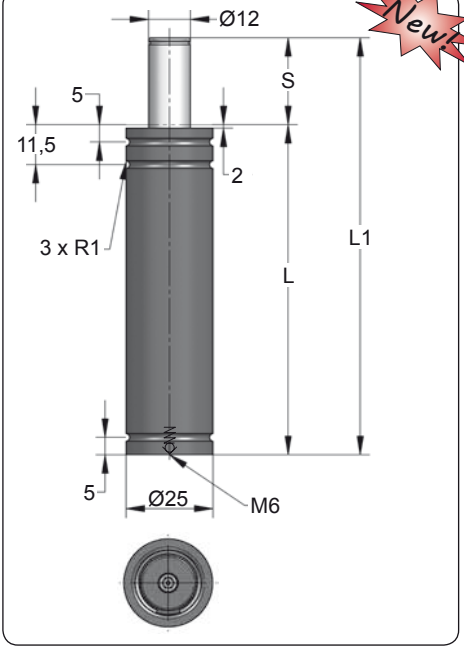


| ORDER | S (mm) | L1 ±0,25 (mm) | L (mm) | Kg. |
|---|---|---|---|---|
| CS 420 006 V1 | 6 | 56 | 50 | 0.15 |
| CS 420 010 V1 | 10 | 70 | 60 | 0.17 |
| CS 420 016 V1 | 16 | 91 | 75 | 0.20 |
| CS 420 025 V1 | 25 | 120 | 95 | 0.24 |
| CS 420 032 V1 | 32 | 140 | 108 | 0.27 |
| CS 420 040 V1 | 40 | 165 | 125 | 0.30 |
| CS 420 050 V1 | 50 | 195 | 145 | 0.35 |

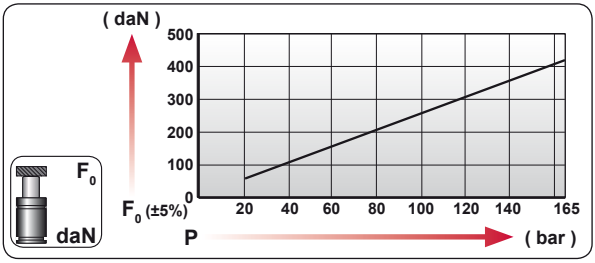


| CODE | bar | psi | $F_0$ daN | $F_1$ daN |
|---|---|---|---|---|
| CS 420 050 V1 | 165 | 2395 | 420 | 740 |
| --------- | --- | --- | --- | --- |

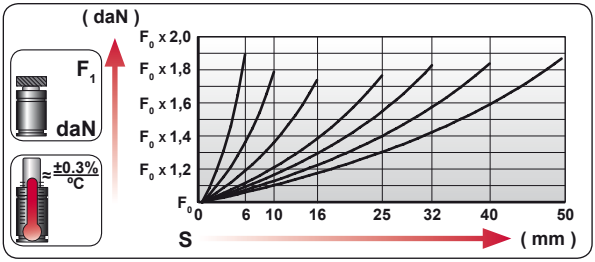


| | |
|---|---|
| ENG | ORDER |
| DEU | BESTELLUNG |
| FRA | COMMANDE |
| ITA | ORDINE |
| ESP | PEDIDO |
| POR | PEDIDO |

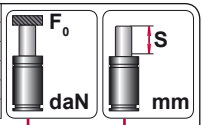


CS 420 50

CS 420 050 V1

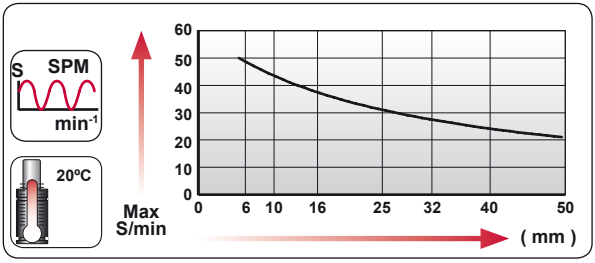


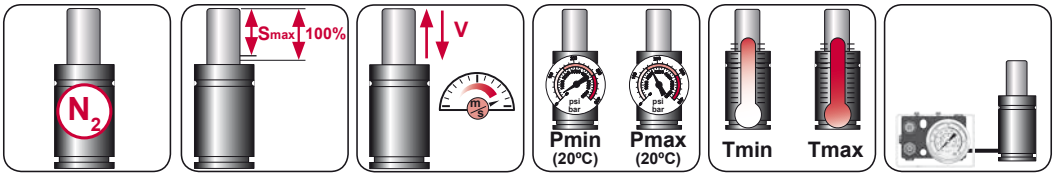


| $N_2$ | Smax < 90% | Vmax 0,5 m/s | bar psi 20 290 | bar psi 165 2395 | ºC ºF 0 32 | ºC ºF 80 176 |
|---|---|---|---|---|---|---|

AZOL GAS

# CS 420 V1 MOUNTS

*Power Compact Stroke*

## A44-025

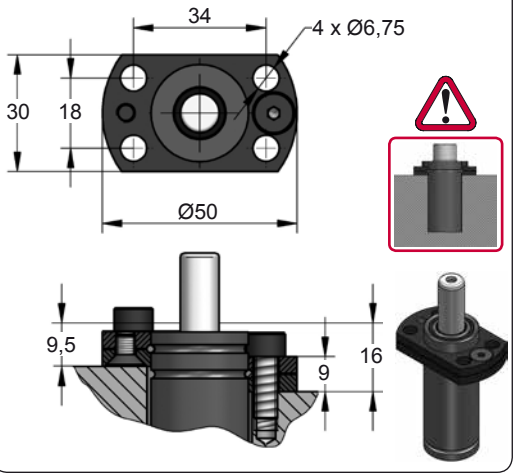


## D02-025

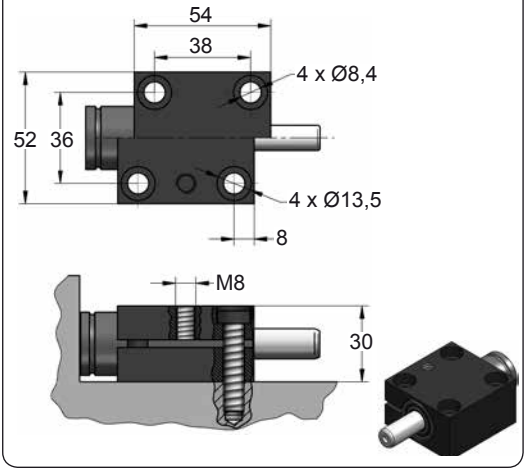









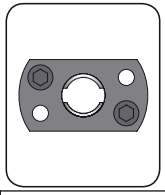

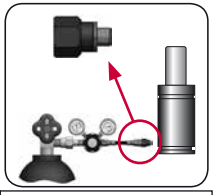

| CODE | | CS 420 050 V1 | KIT XXXXXXX-S | A44-025 | 06 GA 11 |
|---|---|---|---|---|---|
| ENG | ORDER | GAS SPRING | REPAIR KIT | FLANGE | CHARGING ADAPTER |
| DEU | BESTELLUNG | GASDRUCKFEDER | ERSATZTEILSATZ | FLANSCHE | LADEADAPTER |
| FRA | COMMANDE | RESSORT À GAZ | KIT DE RÉPARATION | BRIDE | RACCORD DE CHARGE |
| ITA | ORDINE | CILINDRO AD AZOTO | KIT DI MANUTENZIONE | FLANGE | ADATTATORE DI CARICO |
| ESP | PEDIDO | RESORTE DE GAS | KIT DE REPARACION | BRIDA | ADAPTADOR DE CARGA |
| POR | PEDIDO | CILINDRO DE GÁS | KIT DE MANUTENÇÃO | FLANGE | ADAPTADOR DE CARGA |

# CSE 420

*Power Compact Stroke*

AZOL GAS

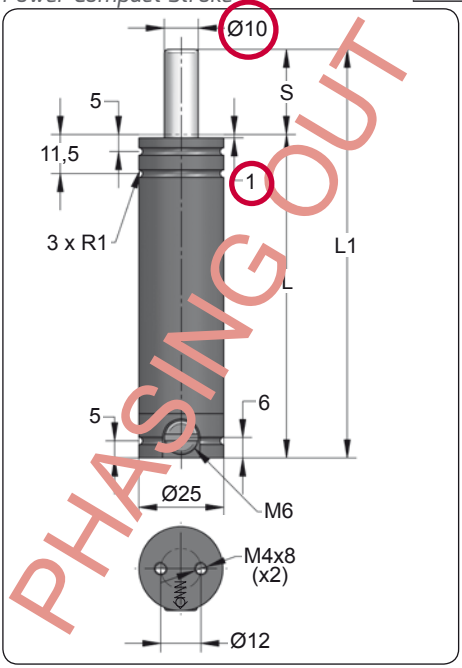


PHASING OUT

| ORDER | S (mm) | L1 ±0,25 (mm) | L (mm) | Kg. |
|---|---|---|---|---|
| CSE 420 006 | 6 | 56 | 50 | 0.16 |
| CSE 420 010 | 10 | 70 | 60 | 0.18 |
| CSE 420 016 | 16 | 91 | 75 | 0.21 |
| CSE 420 025 | 25 | 120 | 95 | 0.25 |
| CSE 420 032 | 32 | 140 | 108 | 0.28 |
| CSE 420 040 | 40 | 165 | 125 | 0.32 |
| CSE 420 050 | 50 | 195 | 145 | 0.36 |

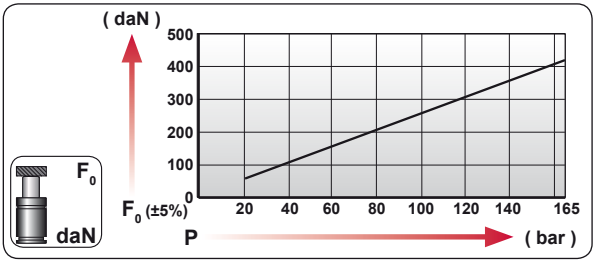


| CODE | bar | psi | F0 daN | F1 daN |
|---|---|---|---|---|
| CSE 420 050 | 165 | 2395 | 420 | 790 |
| CSE-H 420 050 | 0 | 0 | --- | --- |

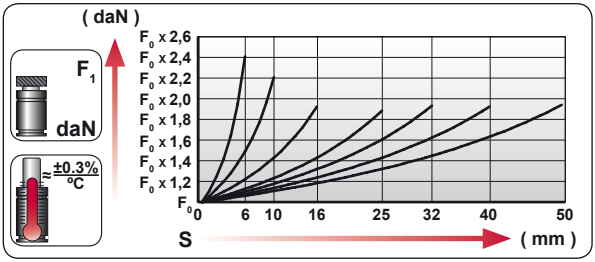


| | |
|---|---|
| ENG | ORDER |
| DEU | BESTELLUNG |
| FRA | COMMANDE |
| ITA | ORDINE |
| ESP | PEDIDO |
| POR | PEDIDO |

F0 daN — S mm

CSE 420 50

CSE 420 050

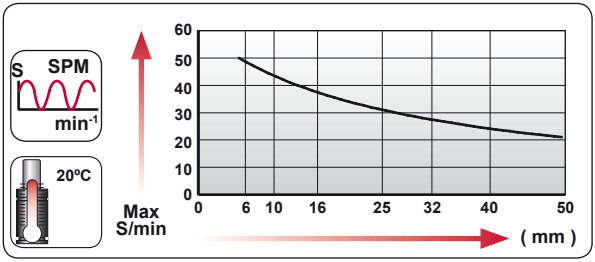


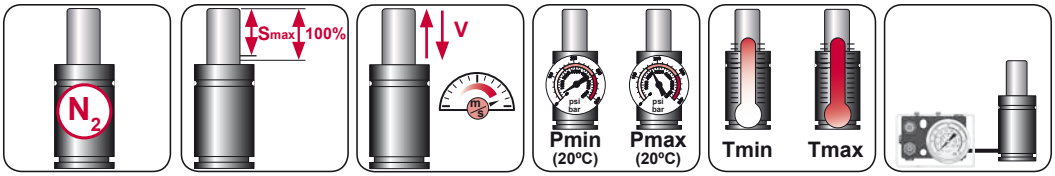


| $N_2$ | Smax < 90% | Vmax 0,5 m/s | bar psi 20 290 | bar psi 165 2395 | ºC ºF 0 32 | ºC ºF 80 176 | 600 CP- |
|---|---|---|---|---|---|---|---|

AZOL GAS

# CSE 420 MOUNTS

*Power Compact Stroke*

## A44-025

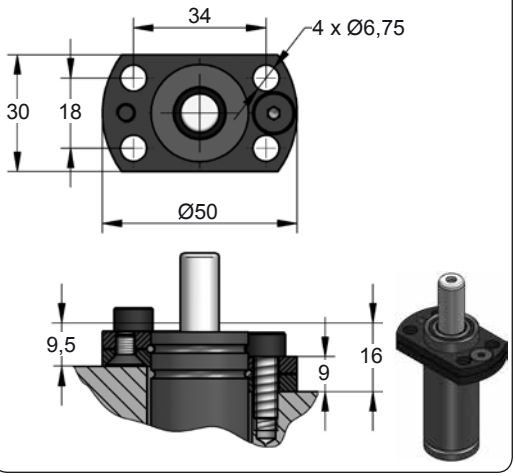


## D02-025

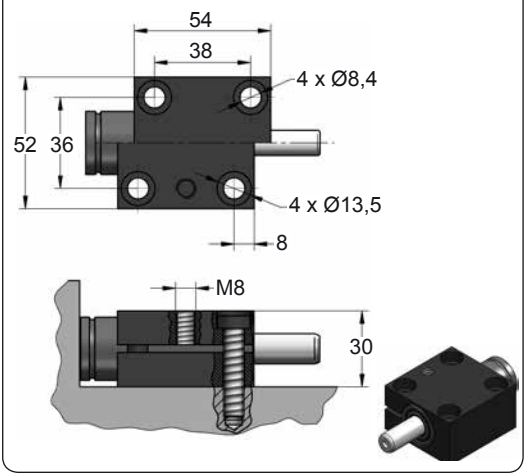









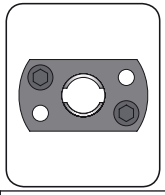

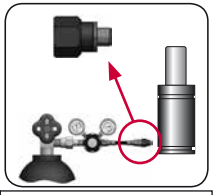

| CODE | | CSE 420 050 | | A44-025 | 06 GA 11 |
|---|---|---|---|---|---|
| ENG | ORDER | GAS SPRING | REPAIR KIT | FLANGE | CHARGING ADAPTER |
| DEU | BESTELLUNG | GASDRUCKFEDER | ERSATZTEILSATZ | FLANSCHE | LADEADAPTER |
| FRA | COMMANDE | RESSORT À GAZ | KIT DE RÉPARATION | BRIDE | RACCORD DE CHARGE |
| ITA | ORDINE | CILINDRO AD AZOTO | KIT DI MANUTENZIONE | FLANGE | ADATTATORE DI CARICO |
| ESP | PEDIDO | RESORTE DE GAS | KIT DE REPARACION | BRIDA | ADAPTADOR DE CARGA |
| POR | PEDIDO | CILINDRO DE GÁS | KIT DE MANUTENÇÃO | FLANGE | ADAPTADOR DE CARGA |

# CSE 420 V1

*Power Compact Stroke*

AZOL GAS

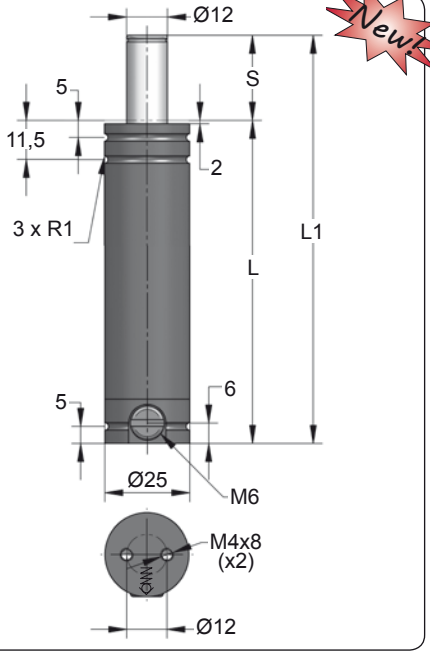


Newt

| ORDER | S (mm) | L1 ±0,25 (mm) | L (mm) | Kg. |
|---|---|---|---|---|
| CSE 420 006 V1 | 6 | 56 | 50 | 0.16 |
| CSE 420 010 V1 | 10 | 70 | 60 | 0.18 |
| CSE 420 016 V1 | 16 | 91 | 75 | 0.21 |
| CSE 420 025 V1 | 25 | 120 | 95 | 0.25 |
| CSE 420 032 V1 | 32 | 140 | 108 | 0.28 |
| CSE 420 040 V1 | 40 | 165 | 125 | 0.32 |
| CSE 420 050 V1 | 50 | 195 | 145 | 0.36 |

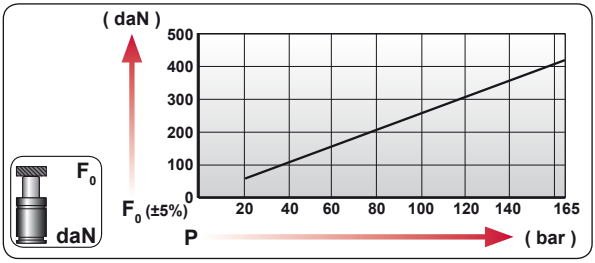


| CODE | bar | psi | F0 daN | F1 daN |
|---|---|---|---|---|
| CSE 420 050 V1 | 165 | 2395 | 420 | 790 |
| CSE-H 420 050 V1 | 0 | 0 | --- | --- |

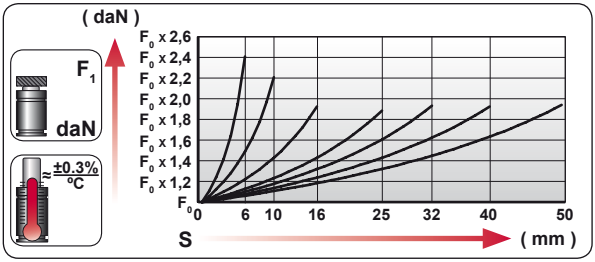


| | |
|---|---|
| ENG | ORDER |
| DEU | BESTELLUNG |
| FRA | COMMANDE |
| ITA | ORDINE |
| ESP | PEDIDO |
| POR | PEDIDO |




CSE 420 50

CSE 420 050 V1

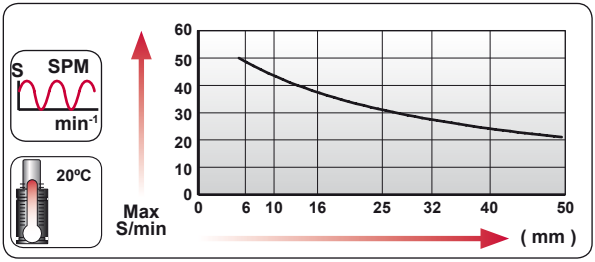


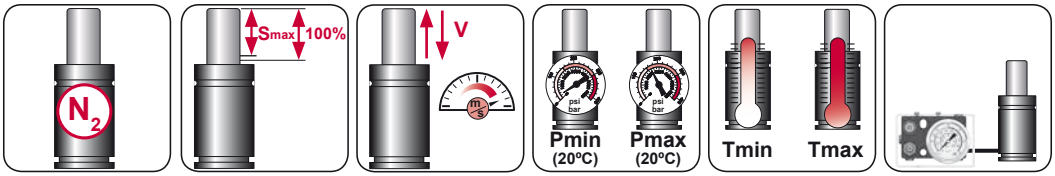


| $N_2$ | Smax < 90% | Vmax 0,5 m/s | bar psi 20 290 | bar psi 165 2395 | ºC ºF 0 32 | ºC ºF 80 176 | 600 CP- |
|---|---|---|---|---|---|---|---|

AZOL GAS

# CSE 420 V1 MOUNTS

*Power Compact Stroke*

## A44-025

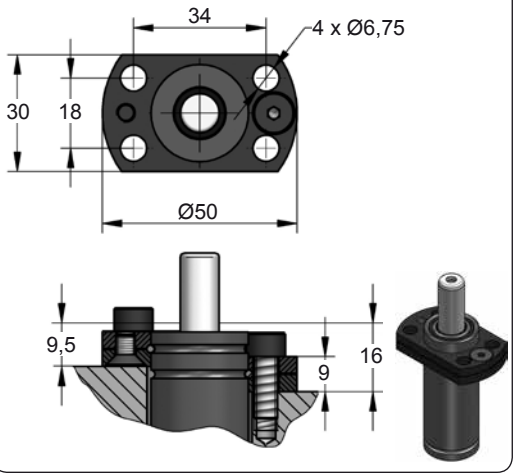


## D02-025

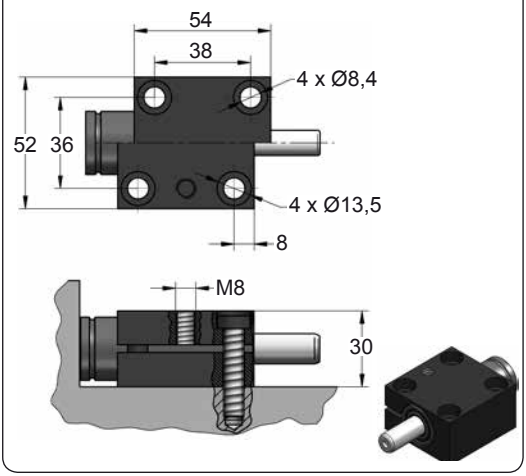









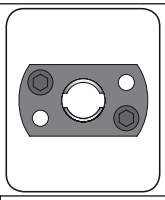

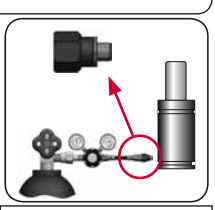

| CODE | | CSE 420 050 V1 | | A44-025 | 06 GA 11 |
|---|---|---|---|---|---|
| ENG | ORDER | GAS SPRING | REPAIR KIT | FLANGE | CHARGING ADAPTER |
| DEU | BESTELLUNG | GASDRUCKFEDER | ERSATZTEILSATZ | FLANSCHE | LADEADAPTER |
| FRA | COMMANDE | RESSORT À GAZ | KIT DE RÉPARATION | BRIDE | RACCORD DE CHARGE |
| ITA | ORDINE | CILINDRO AD AZOTO | KIT DI MANUTENZIONE | FLANGE | ADATTATORE DI CARICO |
| ESP | PEDIDO | RESORTE DE GAS | KIT DE REPARACION | BRIDA | ADAPTADOR DE CARGA |
| POR | PEDIDO | CILINDRO DE GÁS | KIT DE MANUTENÇÃO | FLANGE | ADAPTADOR DE CARGA |

# CS 770 V1

*Power Compact Stroke*

AZOL GAS

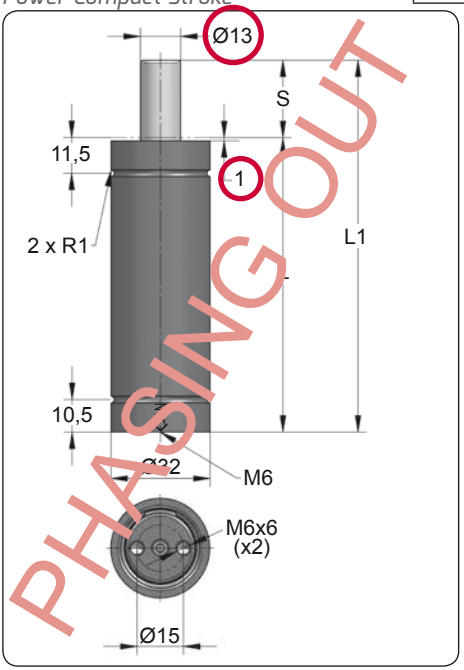


PHASING OUT

| ORDER | S (mm) | L1 ±0,25 (mm) | L (mm) | Kg. |
|---|---|---|---|---|
| CS 770 006 V1 | 6 | 63 | 57 | 0.27 |
| CS 770 010 V1 | 10 | 75 | 65 | 0.29 |
| CS 770 016 V1 | 16 | 93 | 77 | 0.32 |
| CS 770 025 V1 | 25 | 120 | 95 | 0.37 |
| CS 770 032 V1 | 32 | 140 | 108 | 0.40 |
| CS 770 040 V1 | 40 | 165 | 125 | 0.45 |
| CS 770 050 V1 | 50 | 195 | 145 | 0.50 |

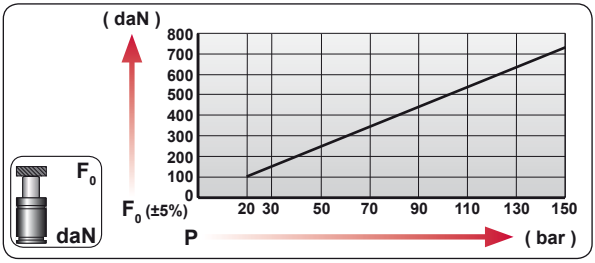


| CODE | bar | psi | F0 daN | F1 daN |
|---|---|---|---|---|
| CS 770 050 V1 | 150 | 2175 | 735 | 1365 |
| --------- | --- | --- | --- | --- |

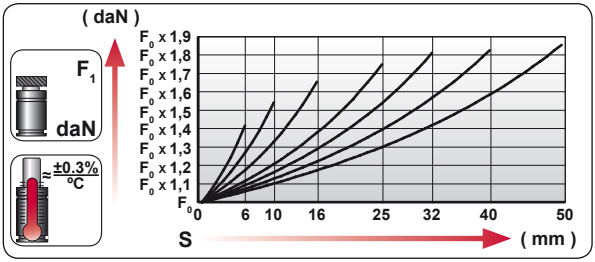


| | |
|---|---|
| ENG | ORDER |
| DEU | BESTELLUNG |
| FRA | COMMANDE |
| ITA | ORDINE |
| ESP | PEDIDO |
| POR | PEDIDO |

F0 daN — S mm

CS 770 50

CS 770 050 V1

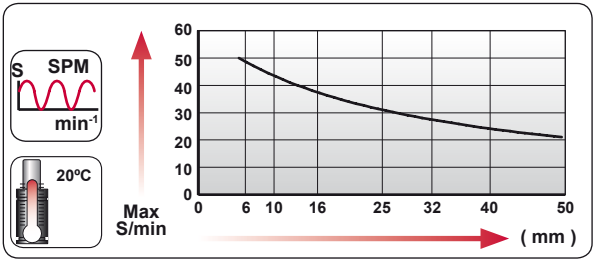


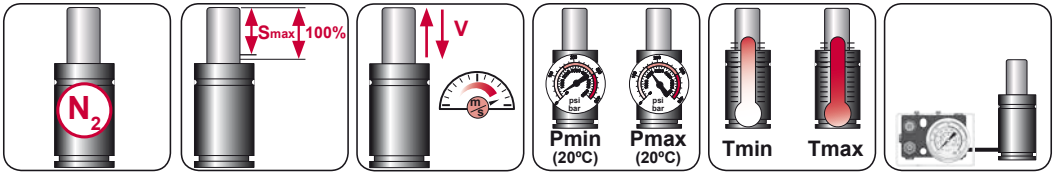


| $N_2$ | Smax < 90% | Vmax 0,5 m/s | bar psi 20 290 | bar psi 150 2175 | °C °F 0 32 | °C °F 80 176 |
|---|---|---|---|---|---|---|

AZOL GAS

# CS 770 V1 MOUNTS

*Power Compact Stroke*

## A14-032

ISO E24.54.815.G EM24.54.700/F

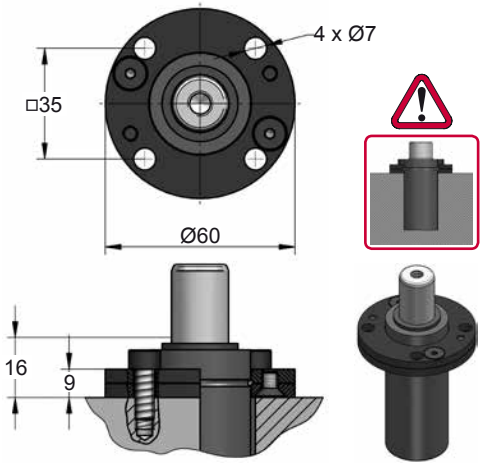


## A34-032

VDI

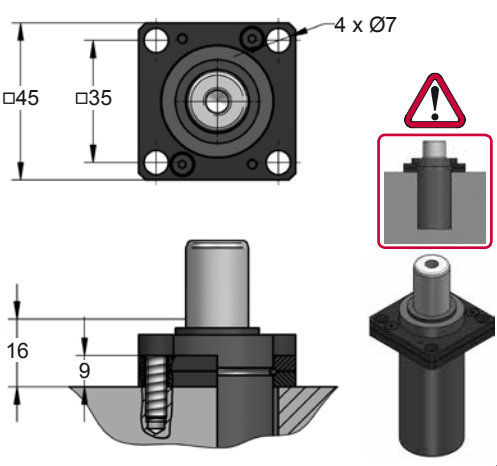


## D02-032

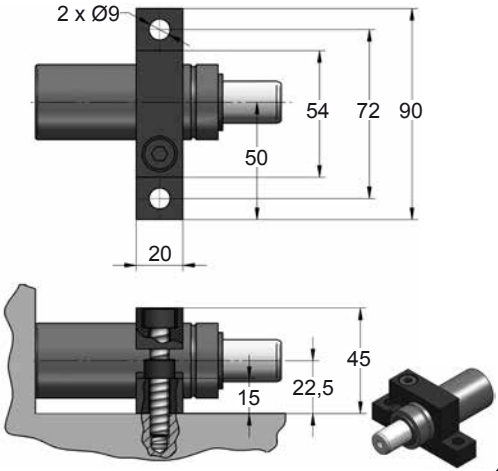









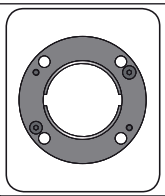

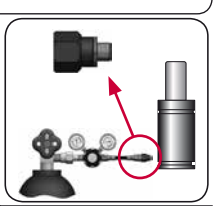

| CODE | | CS 770 050 V1 | KIT XXXXXXX-S | A14-032 | 06 GA 11 |
|---|---|---|---|---|---|
| ENG | ORDER | GAS SPRING | REPAIR KIT | FLANGE | CHARGING ADAPTER |
| DEU | BESTELLUNG | GASDRUCKFEDER | ERSATZTEILSATZ | FLANSCHE | LADEADAPTER |
| FRA | COMMANDE | RESSORT À GAZ | KIT DE RÉPARATION | BRIDE | RACCORD DE CHARGE |
| ITA | ORDINE | CILINDRO AD AZOTO | KIT DI MANUTENZIONE | FLANGE | ADATTATORE DI CARICO |
| ESP | PEDIDO | RESORTE DE GAS | KIT DE REPARACION | BRIDA | ADAPTADOR DE CARGA |
| POR | PEDIDO | CILINDRO DE GÁS | KIT DE MANUTENÇÃO | FLANGE | ADAPTADOR DE CARGA |

# CS 770 V2

*Power Compact Stroke*

AZOL GAS

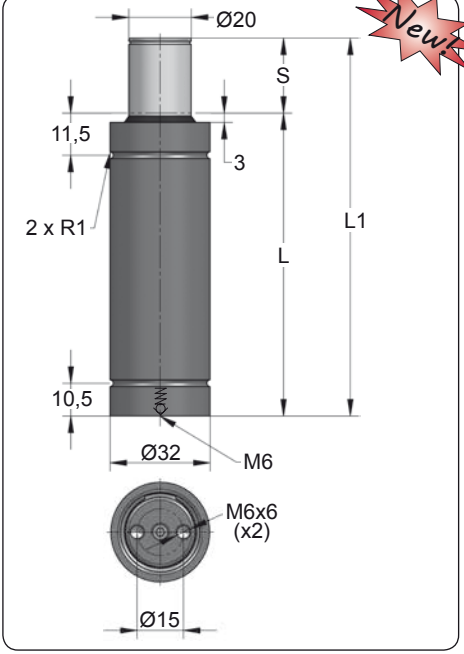


Newt

| ORDER | S (mm) | L1 ±0,25 (mm) | L (mm) | Kg. |
|---|---|---|---|---|
| CS 770 006 V2 | 6 | 63 | 57 | 0.27 |
| CS 770 010 V2 | 10 | 75 | 65 | 0.29 |
| CS 770 016 V2 | 16 | 93 | 77 | 0.32 |
| CS 770 025 V2 | 25 | 120 | 95 | 0.37 |
| CS 770 032 V2 | 32 | 140 | 108 | 0.40 |
| CS 770 040 V2 | 40 | 165 | 125 | 0.45 |
| CS 770 050 V2 | 50 | 195 | 145 | 0.50 |

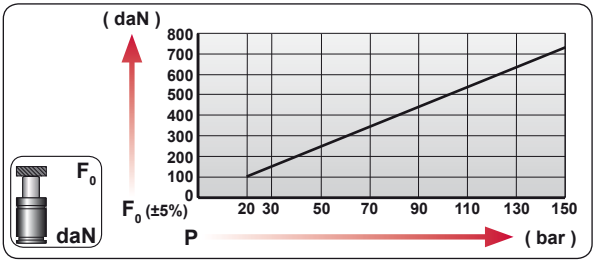


| CODE | bar | psi | F0 daN | F1 daN |
|---|---|---|---|---|
| CS 770 050 V2 | 150 | 2175 | 735 | 1365 |
| --------- | --- | --- | --- | --- |

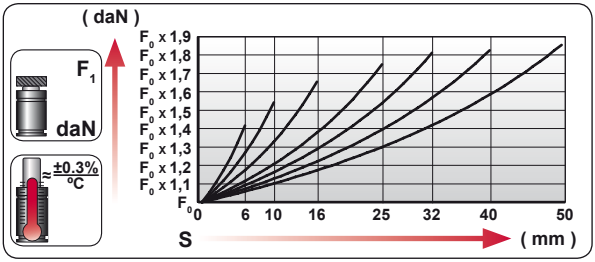


| | ENG | ORDER |
|---|---|---|
| | DEU | BESTELLUNG |
| | FRA | COMMANDE |
| | ITA | ORDINE |
| | ESP | PEDIDO |
| | POR | PEDIDO |

F0 daN — S mm

CS 770 50

CS 770 050 V2

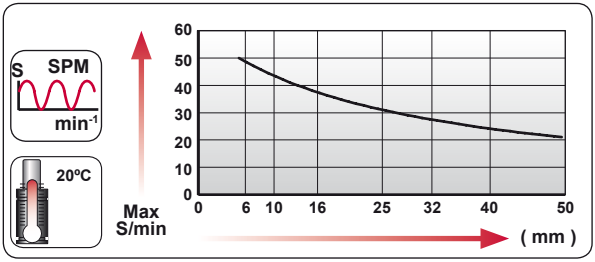


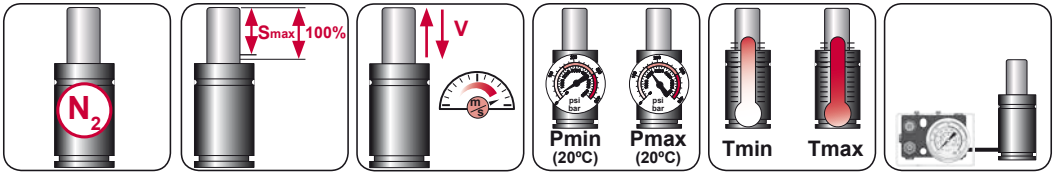


| $N_2$ | Smax < 90% | Vmax 0,5 m/s | bar psi 20 290 | bar psi 150 2175 | ºC ºF 0 32 | ºC ºF 80 176 | |
|---|---|---|---|---|---|---|---|

AZOL GAS

# CS 770 V2 MOUNTS

*Power Compact Stroke*

## A14-032

ISO E24.54.815.G
EM24.54.700/F

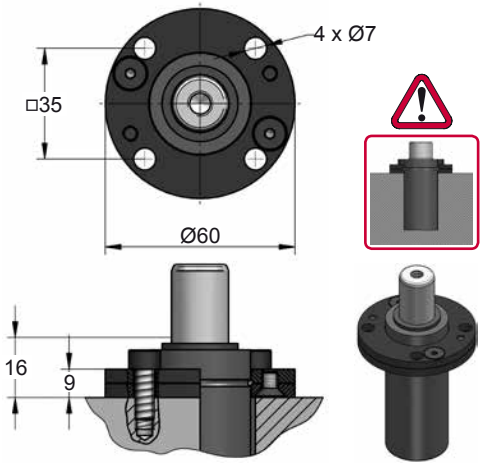


## A34-032

VDI

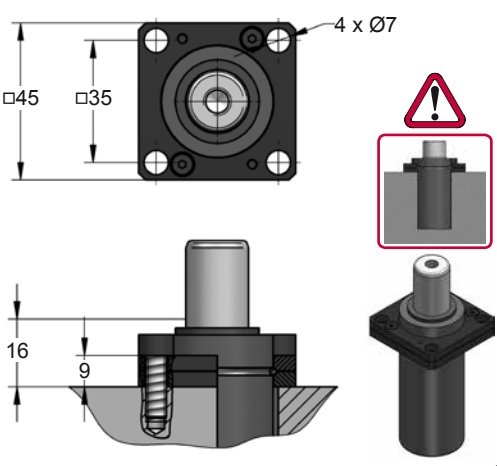


## D02-032

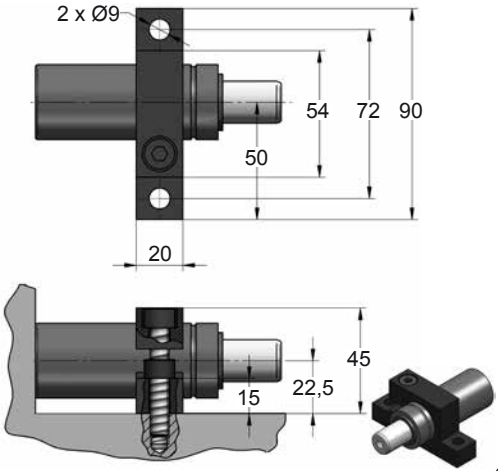









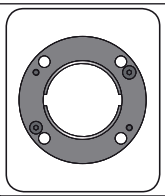

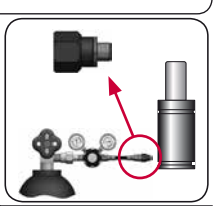

| CODE | | CS 770 050 V2 | KIT XXXXXXX-S | A14-032 | 06 GA 11 |
|---|---|---|---|---|---|
| ENG | ORDER | GAS SPRING | REPAIR KIT | FLANGE | CHARGING ADAPTER |
| DEU | BESTELLUNG | GASDRUCKFEDER | ERSATZTEILSATZ | FLANSCHE | LADEADAPTER |
| FRA | COMMANDE | RESSORT À GAZ | KIT DE RÉPARATION | BRIDE | RACCORD DE CHARGE |
| ITA | ORDINE | CILINDRO AD AZOTO | KIT DI MANUTENZIONE | FLANGE | ADATTATORE DI CARICO |
| ESP | PEDIDO | RESORTE DE GAS | KIT DE REPARACION | BRIDA | ADAPTADOR DE CARGA |
| POR | PEDIDO | CILINDRO DE GÁS | KIT DE MANUTENÇÃO | FLANGE | ADAPTADOR DE CARGA |

# CSE 770 V1

*Power Compact Stroke*

AZOL GAS

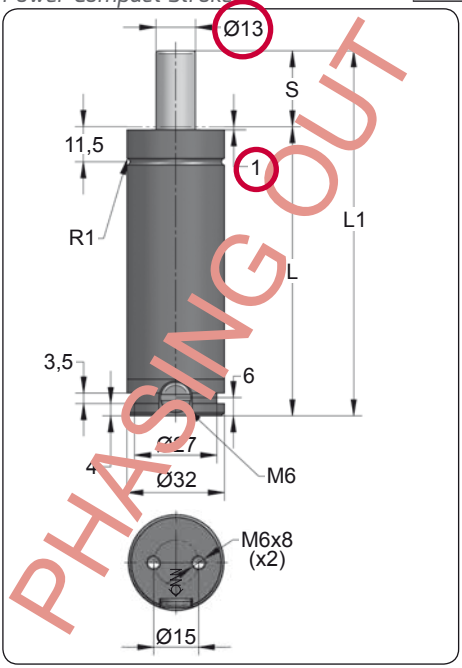


PHASING OUT

| ORDER | S (mm) | L1 ±0,25 (mm) | L (mm) | Kg. |
|---|---|---|---|---|
| CSE 770 006 V1 | 6 | 63 | 57 | 0.28 |
| CSE 770 010 V1 | 10 | 75 | 65 | 0.31 |
| CSE 770 016 V1 | 16 | 93 | 77 | 0.34 |
| CSE 770 025 V1 | 25 | 120 | 95 | 0.39 |
| CSE 770 032 V1 | 32 | 140 | 108 | 0.42 |
| CSE 770 040 V1 | 40 | 165 | 125 | 0.47 |
| CSE 770 050 V1 | 50 | 195 | 145 | 0.52 |

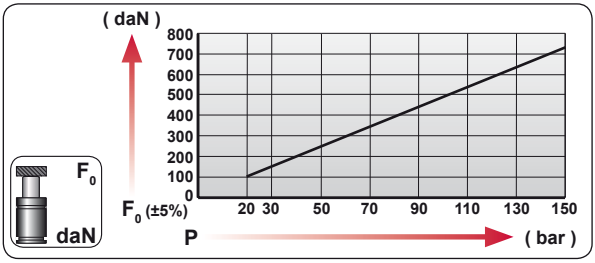


| CODE | bar | psi | F0 daN | F1 daN |
|---|---|---|---|---|
| CSE 770 050 V1 | 150 | 2175 | 735 | 1420 |
| CSE-H 770 050 V1 | 0 | 0 | --- | --- |

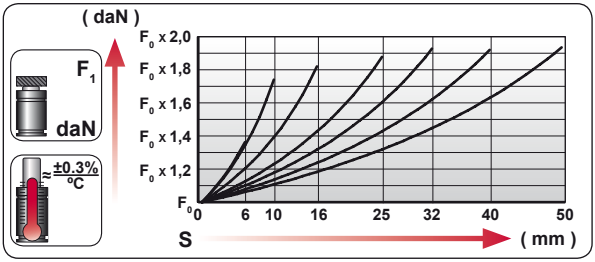


| | |
|---|---|
| ENG | ORDER |
| DEU | BESTELLUNG |
| FRA | COMMANDE |
| ITA | ORDINE |
| ESP | PEDIDO |
| POR | PEDIDO |

F0 daN — S mm

CSE 770 50

CSE 770 050 V1

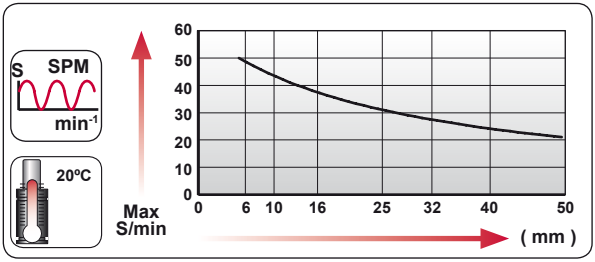


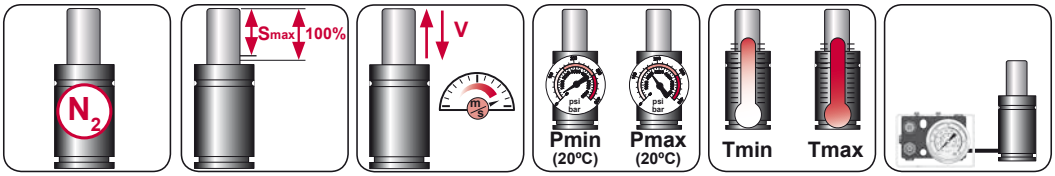


| $N_2$ | Smax < 90% | Vmax 0,5 m/s | bar psi 20 290 | bar psi 150 2175 | ºC ºF 0 32 | ºC ºF 80 176 | 600 CP- |
|---|---|---|---|---|---|---|---|

AZOL GAS

# CSE 770 V1 MOUNTS

*Power Compact Stroke*

## A14-032

ISO E24.54.815.G EM24.54.700/F

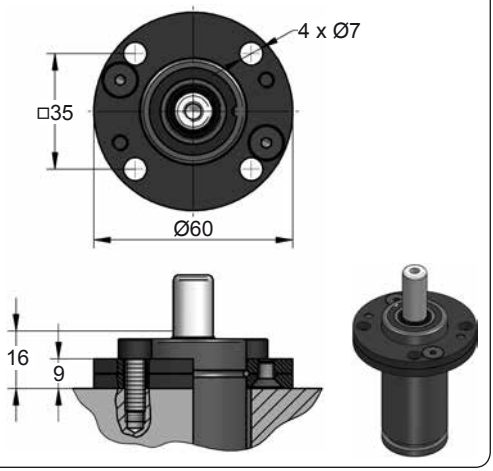


## A34-032

VDI

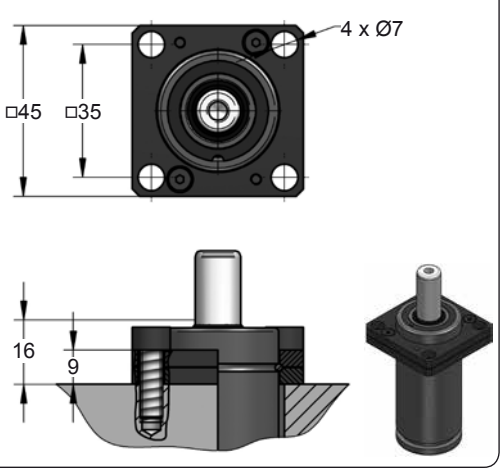


## C20-032

ISO VDI E24.54.815.G EM24.54.700/F

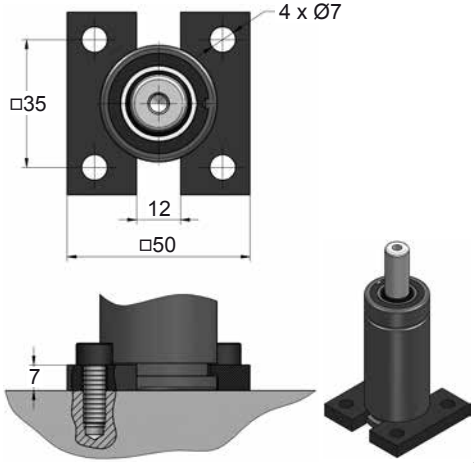


## D02-032

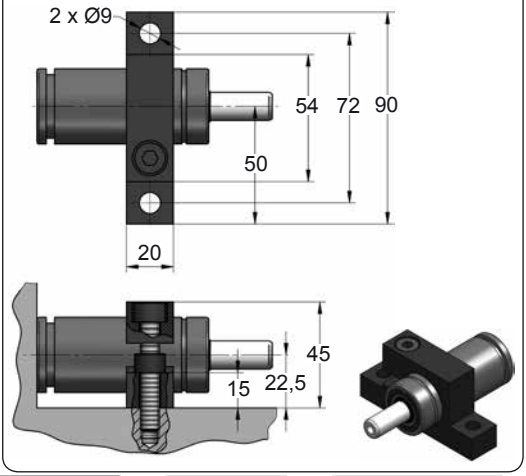









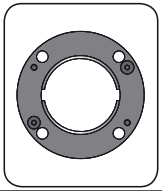

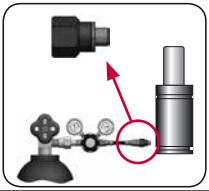

| CODE | | CSE 770 050 V1 | | A14-032 | 06 GA 11 |
|---|---|---|---|---|---|
| ENG | ORDER | GAS SPRING | REPAIR KIT | FLANGE | CHARGING ADAPTER |
| DEU | BESTELLUNG | GASDRUCKFEDER | ERSATZTEILSATZ | FLANSCHE | LADEADAPTER |
| FRA | COMMANDE | RESSORT À GAZ | KIT DE RÉPARATION | BRIDE | RACCORD DE CHARGE |
| ITA | ORDINE | CILINDRO AD AZOTO | KIT DI MANUTENZIONE | FLANGE | ADATTATORE DI CARICO |
| ESP | PEDIDO | RESORTE DE GAS | KIT DE REPARACION | BRIDA | ADAPTADOR DE CARGA |
| POR | PEDIDO | CILINDRO DE GÁS | KIT DE MANUTENÇÃO | FLANGE | ADAPTADOR DE CARGA |

# CSE 770 V2

*Power Compact Stroke*

AZOL GAS

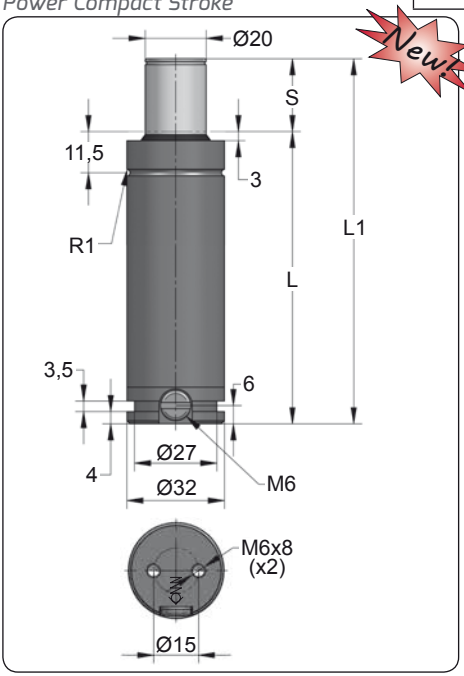


Newt

| ORDER | S (mm) | L1 ±0,25 (mm) | L (mm) | Kg. |
|---|---|---|---|---|
| CSE 770 006 V2 | 6 | 63 | 57 | 0.28 |
| CSE 770 010 V2 | 10 | 75 | 65 | 0.31 |
| CSE 770 016 V2 | 16 | 93 | 77 | 0.34 |
| CSE 770 025 V2 | 25 | 120 | 95 | 0.39 |
| CSE 770 032 V2 | 32 | 140 | 108 | 0.42 |
| CSE 770 040 V2 | 40 | 165 | 125 | 0.47 |
| CSE 770 050 V2 | 50 | 195 | 145 | 0.52 |

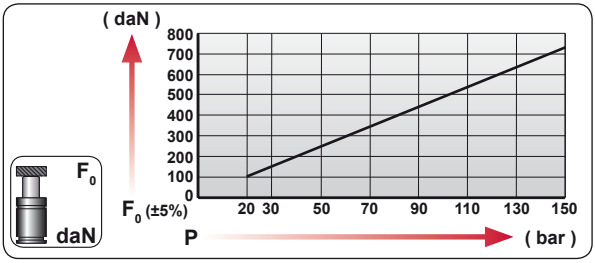


| CODE | bar | psi | F0 daN | F1 daN |
|---|---|---|---|---|
| CSE 770 050 V2 | 150 | 2175 | 735 | 1420 |
| CSE-H 770 050 V2 | 0 | 0 | --- | --- |

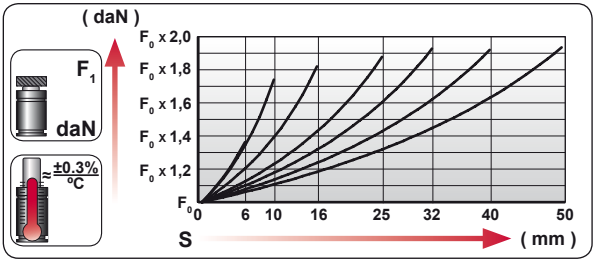


| | |
|---|---|
| ENG | ORDER |
| DEU | BESTELLUNG |
| FRA | COMMANDE |
| ITA | ORDINE |
| ESP | PEDIDO |
| POR | PEDIDO |

F0 daN — S mm

CSE 770 50

CSE 770 050 V2

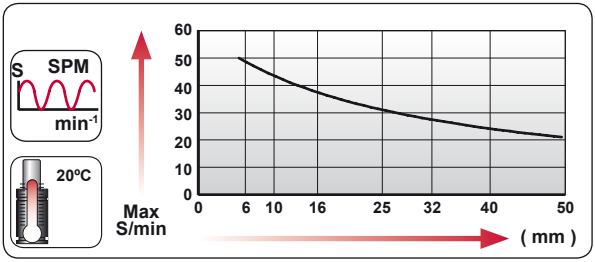


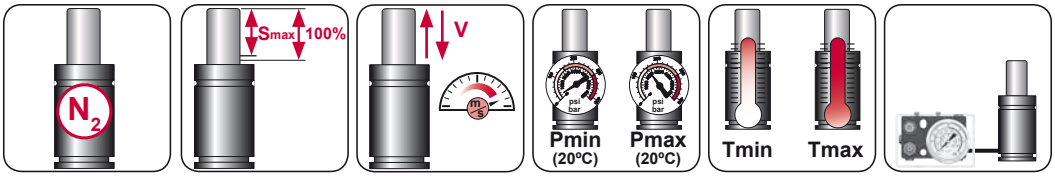


| $N_2$ | Smax < 90% | Vmax 0,5 m/s | bar psi 20 290 | bar psi 150 2175 | ºC ºF 0 32 | ºC ºF 80 176 | 600 CP- |
|---|---|---|---|---|---|---|---|

AZOL GAS

# CSE 770 V2 MOUNTS

*Power Compact Stroke*

## A14-032

ISO | E24.54.815.G | EM24.54.700/F

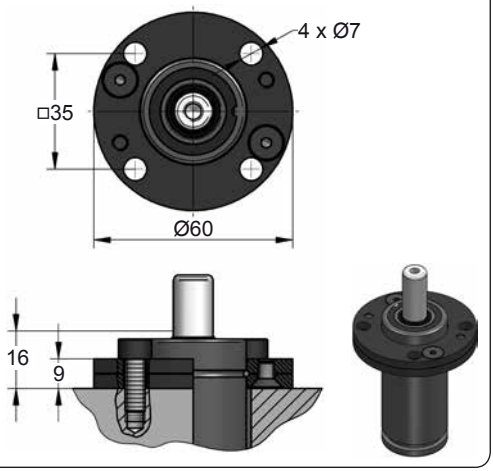


## A34-032

VDI

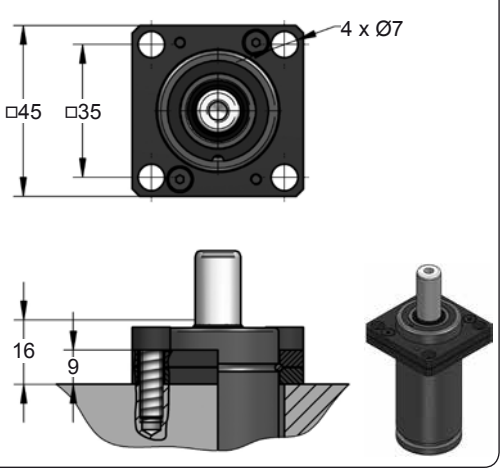


## C20-032

ISO | VDI | E24.54.815.G | EM24.54.700/F

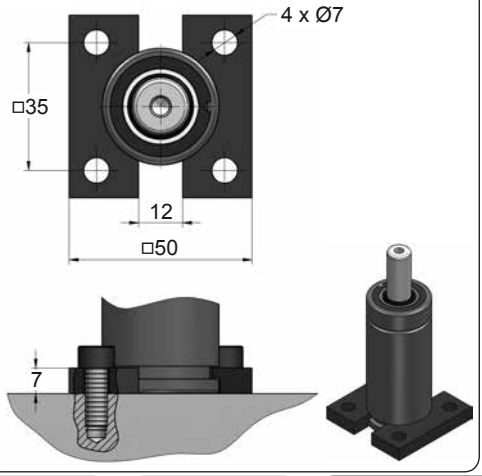


## D02-032

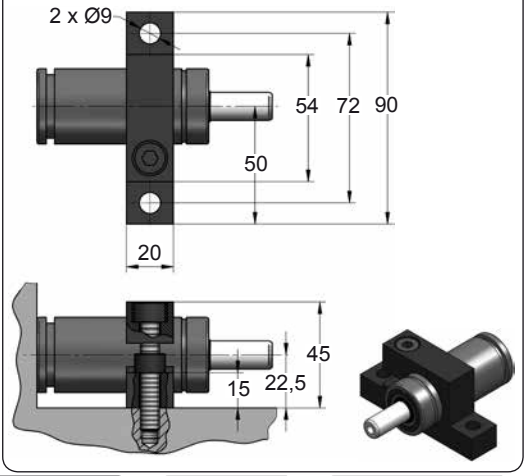









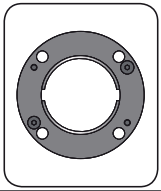

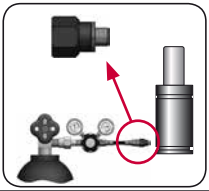

| CODE | | CSE 770 050 V2 | | A14-032 | 06 GA 11 |
|---|---|---|---|---|---|
| ENG | ORDER | GAS SPRING | REPAIR KIT | FLANGE | CHARGING ADAPTER |
| DEU | BESTELLUNG | GASDRUCKFEDER | ERSATZTEILSATZ | FLANSCHE | LADEADAPTER |
| FRA | COMMANDE | RESSORT À GAZ | KIT DE RÉPARATION | BRIDE | RACCORD DE CHARGE |
| ITA | ORDINE | CILINDRO AD AZOTO | KIT DI MANUTENZIONE | FLANGE | ADATTATORE DI CARICO |
| ESP | PEDIDO | RESORTE DE GAS | KIT DE REPARACION | BRIDA | ADAPTADOR DE CARGA |
| POR | PEDIDO | CILINDRO DE GÁS | KIT DE MANUTENÇÃO | FLANGE | ADAPTADOR DE CARGA |

# CS 1000

*Power Compact Stroke*

AZOL GAS

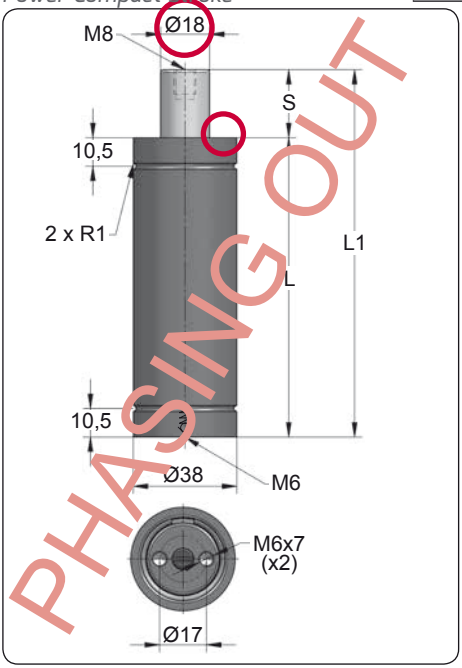


PHASING OUT

| ORDER | S (mm) | L1 ±0,25 (mm) | L (mm) | Kg. |
|---|---|---|---|---|
| CS 1000 006 | 6 | 61 | 55 | 0.36 |
| CS 1000 010 | 10 | 77 | 67 | 0.40 |
| CS 1000 016 | 16 | 100 | 84 | 0.47 |
| CS 1000 025 | 25 | 135 | 110 | 0.58 |
| CS 1000 032 | 32 | 167 | 135 | 0.67 |
| CS 1000 040 | 40 | 195 | 155 | 0.80 |
| CS 1000 050 | 50 | 230 | 180 | 0.88 |

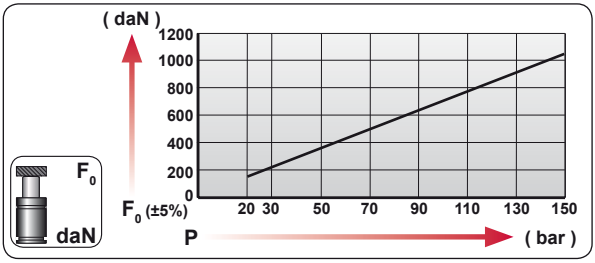


| CODE | bar | psi | F0 daN | F1 daN |
|---|---|---|---|---|
| CS 1000 050 | 150 | 2175 | 1060 | 1640 |
| --------- | --- | --- | --- | --- |

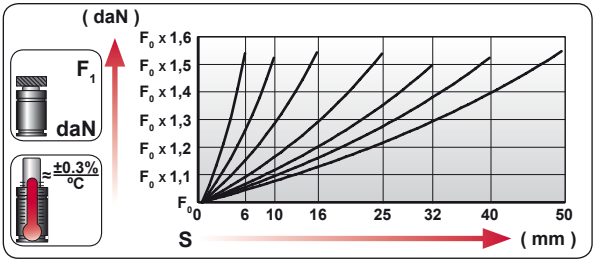


| ENG | ORDER |
|---|---|
| DEU | BESTELLUNG |
| FRA | COMMANDE |
| ITA | ORDINE |
| ESP | PEDIDO |
| POR | PEDIDO |

F0 daN — S mm

CS 1000 50

CS 1000 050

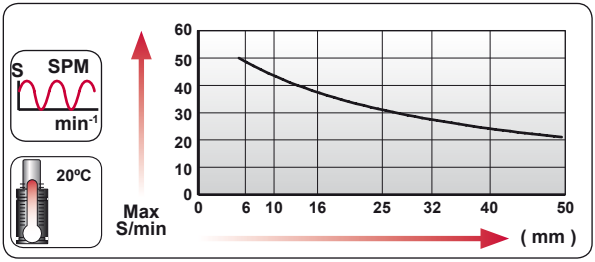


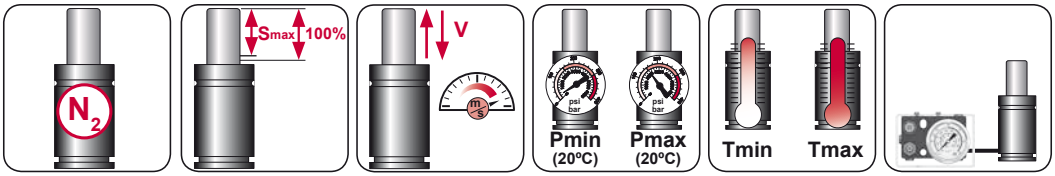


| $N_2$ | Smax < 90% | Vmax 0,5 m/s | bar psi 20 290 | bar psi 150 2175 | ºC ºF 0 32 | ºC ºF 80 176 | |
|---|---|---|---|---|---|---|---|

AZOL GAS

# CS 1000 MOUNTS

*Power Compact Stroke*

## A14-038

ISO · E24.54.815.G · EM24.54.700/F

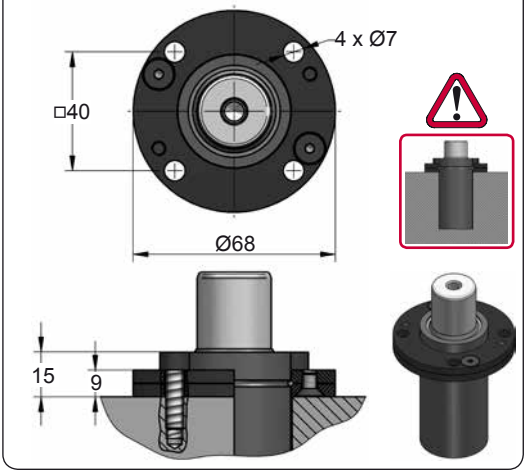


## A19-038

E24.54.815.G

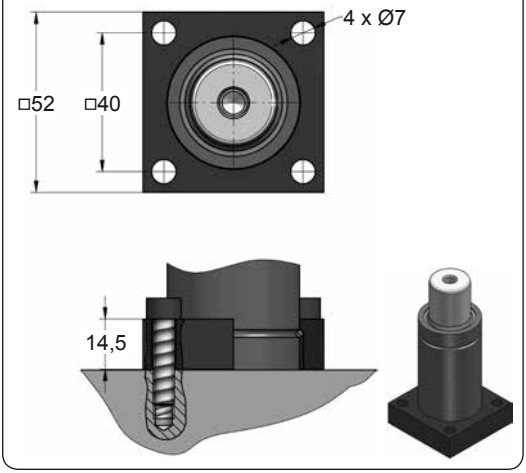


## A34-038

ISO · VDI

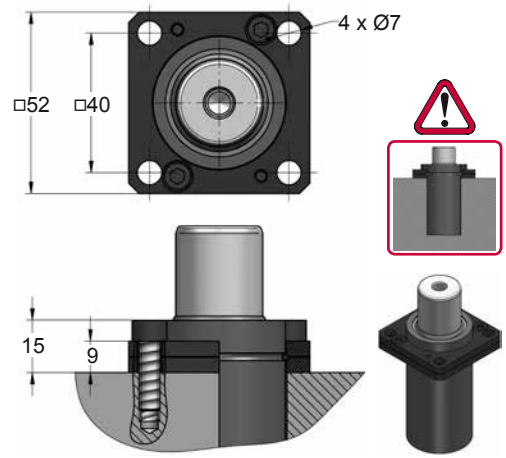


## D02-038

E24.54.815.G

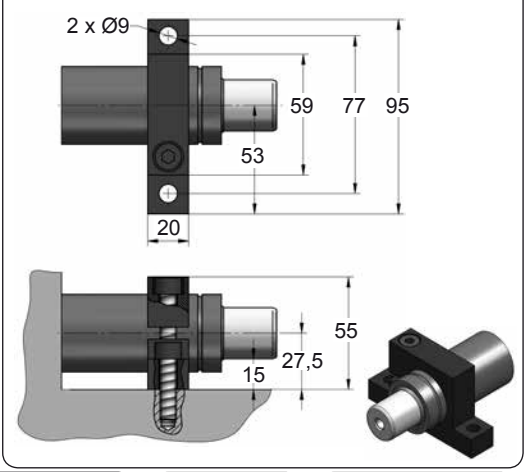









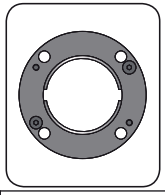

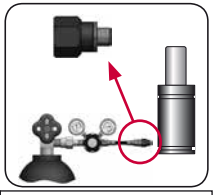

| CODE | | CS 1000 050 | KIT XXXXXXX-S | A14-038 | 06 GA 11 |
|---|---|---|---|---|---|
| ENG | ORDER | GAS SPRING | REPAIR KIT | FLANGE | CHARGING ADAPTER |
| DEU | BESTELLUNG | GASDRUCKFEDER | ERSATZTEILSATZ | FLANSCHE | LADEADAPTER |
| FRA | COMMANDE | RESSORT À GAZ | KIT DE RÉPARATION | BRIDE | RACCORD DE CHARGE |
| ITA | ORDINE | CILINDRO AD AZOTO | KIT DI MANUTENZIONE | FLANGE | ADATTATORE DI CARICO |
| ESP | PEDIDO | RESORTE DE GAS | KIT DE REPARACION | BRIDA | ADAPTADOR DE CARGA |
| POR | PEDIDO | CILINDRO DE GÁS | KIT DE MANUTENÇÃO | FLANGE | ADAPTADOR DE CARGA |

# CS 1000 V1

*Power Compact Stroke*

| BMW B2 4006 | | PSA E24.54.815.G |
|---|---|---|
| | | |
| | | |

AZOL GAS

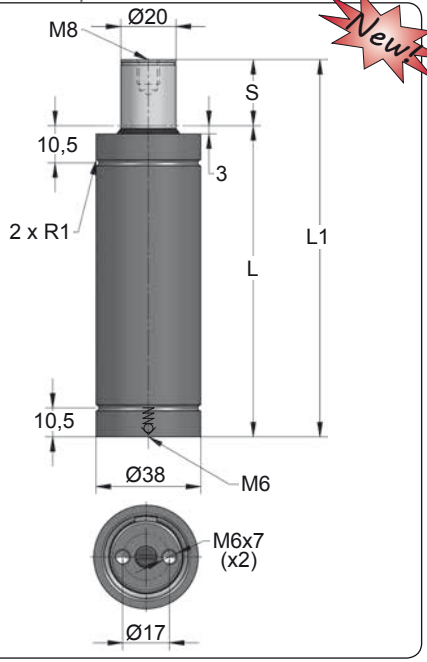


Newt

| ORDER | S (mm) | L1 ±0,25 (mm) | L (mm) | Kg. |
|---|---|---|---|---|
| CS 1000 006 V1 | 6 | 61 | 55 | 0.36 |
| CS 1000 010 V1 | 10 | 77 | 67 | 0.40 |
| CS 1000 016 V1 | 16 | 100 | 84 | 0.47 |
| CS 1000 025 V1 | 25 | 135 | 110 | 0.58 |
| CS 1000 032 V1 | 32 | 167 | 135 | 0.67 |
| CS 1000 040 V1 | 40 | 195 | 155 | 0.80 |
| CS 1000 050 V1 | 50 | 230 | 180 | 0.88 |

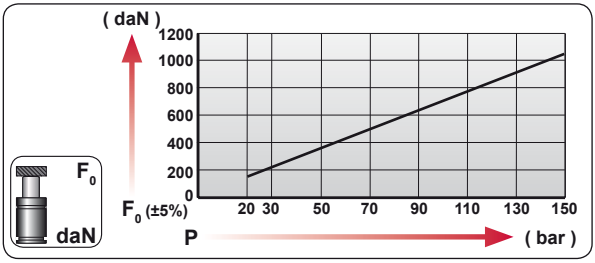


| CODE | bar | psi | F0 daN | F1 daN |
|---|---|---|---|---|
| CS 1000 050 V1 | 150 | 2175 | 1060 | 1640 |
| --------- | --- | --- | --- | --- |

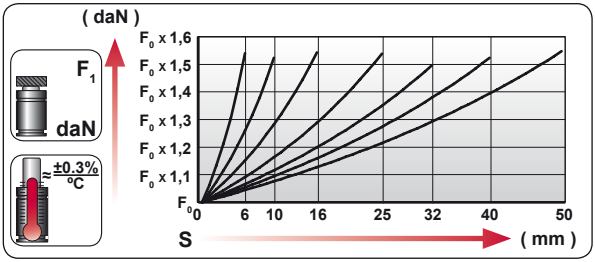


| | |
|---|---|
| ENG | ORDER |
| DEU | BESTELLUNG |
| FRA | COMMANDE |
| ITA | ORDINE |
| ESP | PEDIDO |
| POR | PEDIDO |

F0 daN — S mm

CS 1000 50

CS 1000 050 V1

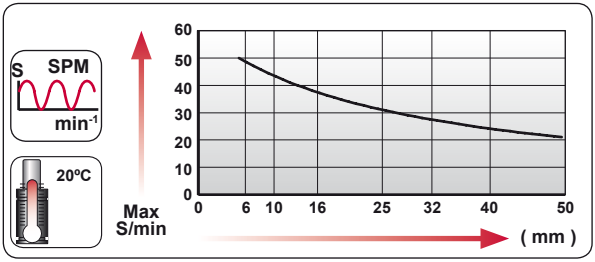


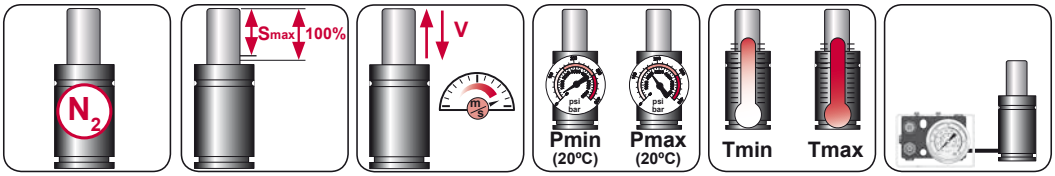


| $N_2$ | Smax < 90% | Vmax 0,5 m/s | bar psi 20 290 | bar psi 150 2175 | ºC ºF 0 32 | ºC ºF 80 176 | |
|---|---|---|---|---|---|---|---|

AZOL GAS

# CS 1000 V1 MOUNTS

*Power Compact Stroke*

## A14-038

ISO | E24.54.815.G EM24.54.700/F

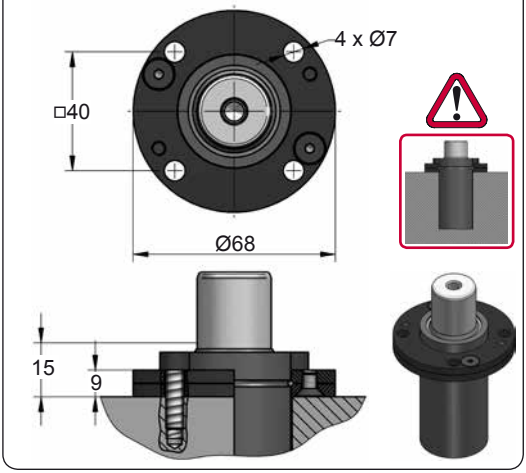


## A19-038

E24.54.815.G

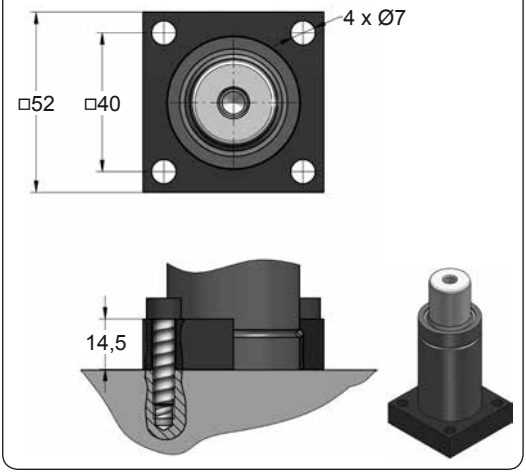


## A34-038

ISO | VDI

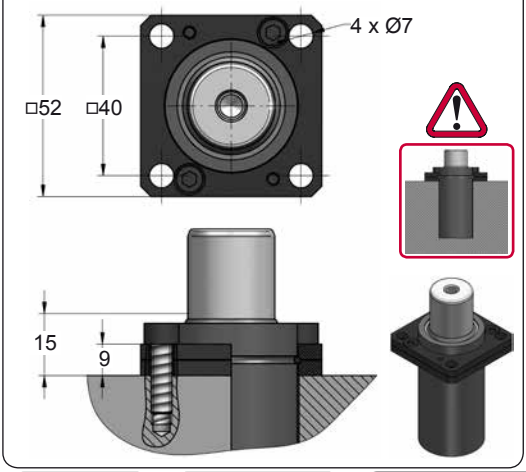


## D02-038

E24.54.815.G

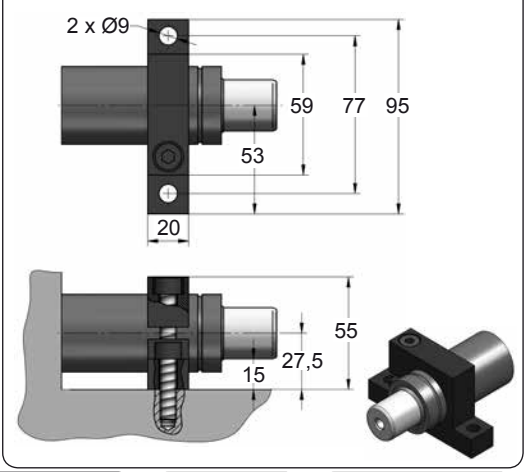









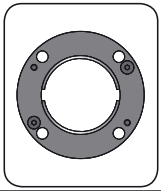

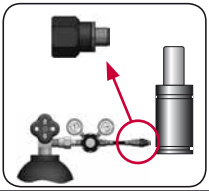

| CODE | | CS 1000 050 V1 | KIT XXXXXXX-S | A14-038 | 06 GA 11 |
|---|---|---|---|---|---|
| ENG | ORDER | GAS SPRING | REPAIR KIT | FLANGE | CHARGING ADAPTER |
| DEU | BESTELLUNG | GASDRUCKFEDER | ERSATZTEILSATZ | FLANSCHE | LADEADAPTER |
| FRA | COMMANDE | RESSORT À GAZ | KIT DE RÉPARATION | BRIDE | RACCORD DE CHARGE |
| ITA | ORDINE | CILINDRO AD AZOTO | KIT DI MANUTENZIONE | FLANGE | ADATTATORE DI CARICO |
| ESP | PEDIDO | RESORTE DE GAS | KIT DE REPARACION | BRIDA | ADAPTADOR DE CARGA |
| POR | PEDIDO | CILINDRO DE GÁS | KIT DE MANUTENÇÃO | FLANGE | ADAPTADOR DE CARGA |

# CSE 1000

*Power Compact Stroke*

AZOL GAS

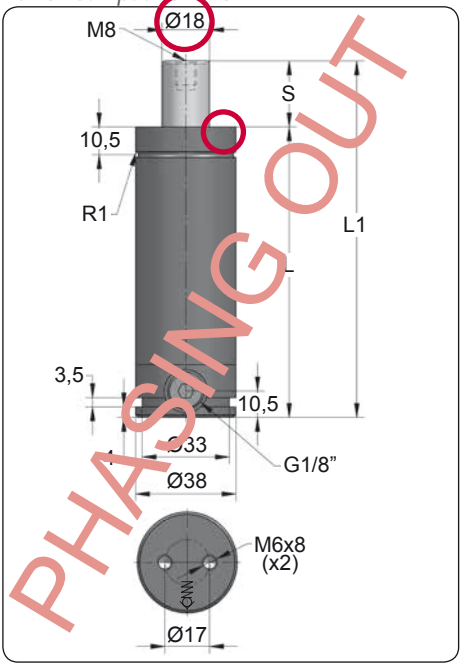


PHASING OUT

| ORDER | S (mm) | L1 ±0,25 (mm) | L (mm) | Kg. |
|---|---|---|---|---|
| CSE 1000 006 | 6 | 61 | 55 | 0.43 |
| CSE 1000 010 | 10 | 77 | 67 | 0.48 |
| CSE 1000 016 | 16 | 100 | 84 | 0.55 |
| CSE 1000 025 | 25 | 135 | 110 | 0.66 |
| CSE 1000 032 | 32 | 167 | 135 | 0.75 |
| CSE 1000 040 | 40 | 195 | 155 | 0.84 |
| CSE 1000 050 | 50 | 230 | 180 | 0.94 |

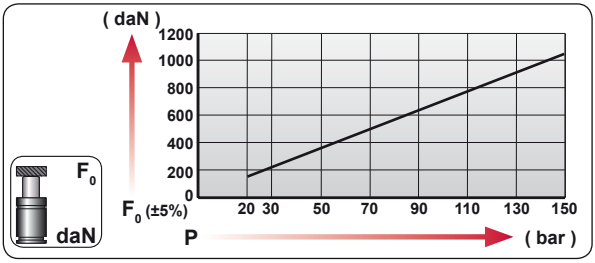


| CODE | bar | psi | F0 daN | F1 daN |
|---|---|---|---|---|
| CSE 1000 050 | 150 | 2175 | 1060 | 1720 |
| CSE-H 1000 050 | 0 | 0 | --- | --- |

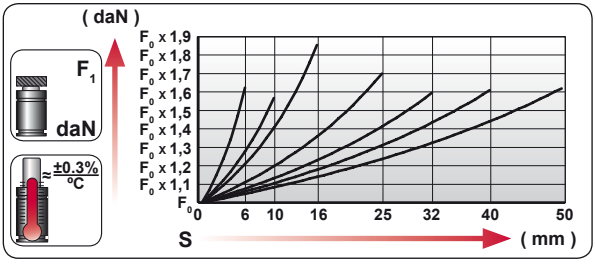


| | |
|---|---|
| ENG | ORDER |
| DEU | BESTELLUNG |
| FRA | COMMANDE |
| ITA | ORDINE |
| ESP | PEDIDO |
| POR | PEDIDO |

F0 daN — S mm

CSE 1000 50

CSE 1000 050

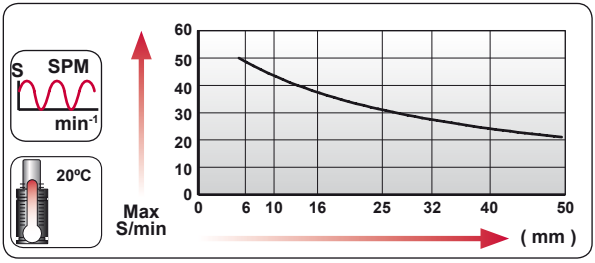


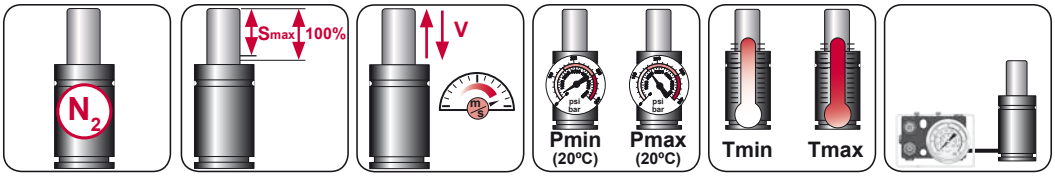


| $N_2$ | Smax < 90% | Vmax 0,5 m/s | bar psi 20 290 | bar psi 150 2175 | ºC ºF 0 32 | ºC ºF 80 176 | 600 CP- |
|---|---|---|---|---|---|---|---|

AZOL GAS

# CSE 1000 MOUNTS

*Power Compact Stroke*

## A14-038

ISO | E24.54.815.G EM24.54.700/F

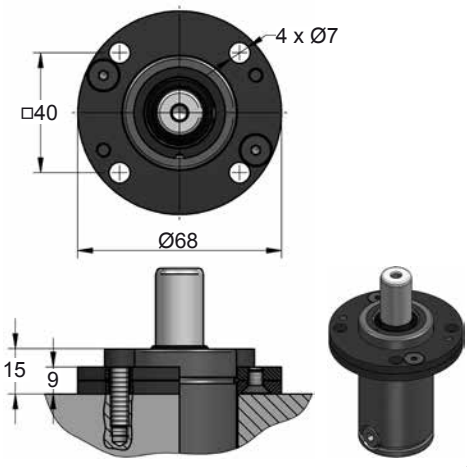


## A34-038

ISO | VDI

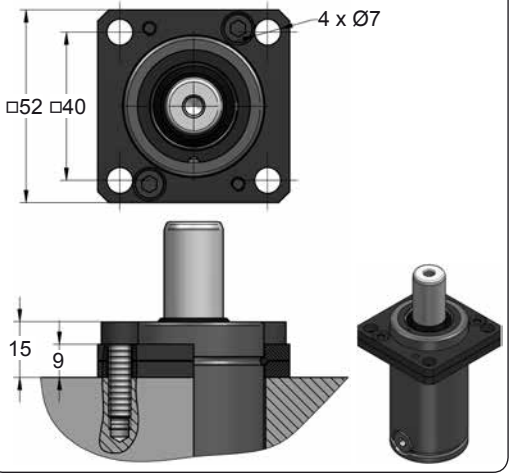


## C20-038

ISO | VDI | E24.54.815.G EM24.54.700/F

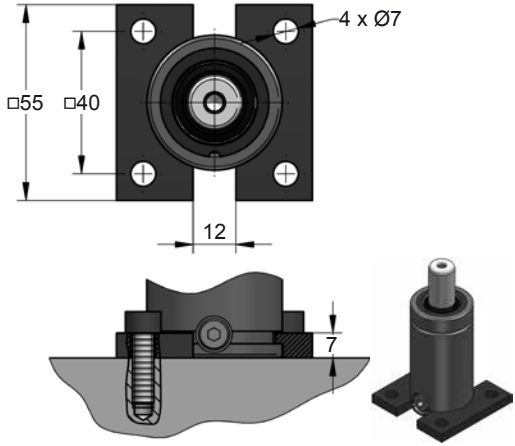


## D02-038

E24.54.815.G

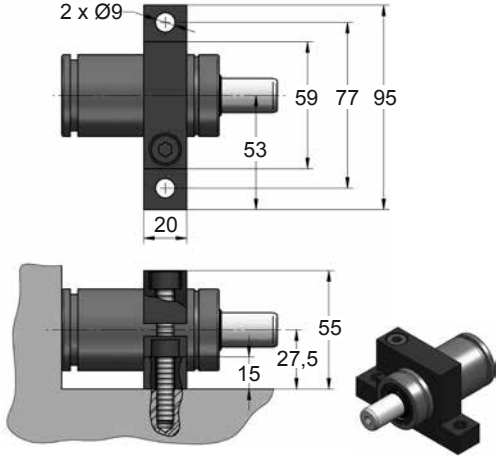









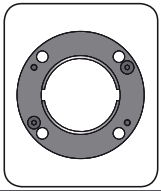

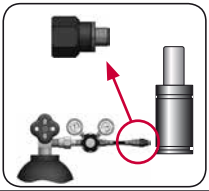

| CODE | | CSE 1000 050 | | A14-038 | 18 GA 5 |
|---|---|---|---|---|---|
| ENG | ORDER | GAS SPRING | REPAIR KIT | FLANGE | CHARGING ADAPTER |
| DEU | BESTELLUNG | GASDRUCKFEDER | ERSATZTEILSATZ | FLANSCHE | LADEADAPTER |
| FRA | COMMANDE | RESSORT À GAZ | KIT DE RÉPARATION | BRIDE | RACCORD DE CHARGE |
| ITA | ORDINE | CILINDRO AD AZOTO | KIT DI MANUTENZIONE | FLANGE | ADATTATORE DI CARICO |
| ESP | PEDIDO | RESORTE DE GAS | KIT DE REPARACION | BRIDA | ADAPTADOR DE CARGA |
| POR | PEDIDO | CILINDRO DE GÁS | KIT DE MANUTENÇÃO | FLANGE | ADAPTADOR DE CARGA |

# CSE 1000 V1

*Power Compact Stroke*

AZOL GAS

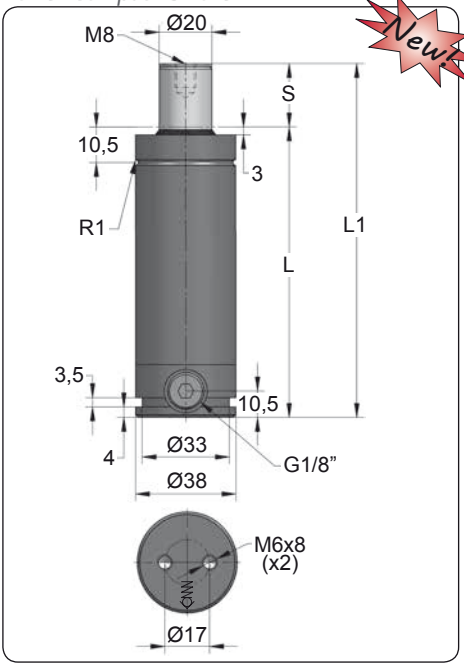


Newt

| ORDER | S (mm) | L1 ±0,25 (mm) | L (mm) | Kg. |
|---|---|---|---|---|
| CSE 1000 006 V1 | 6 | 61 | 55 | 0.43 |
| CSE 1000 010 V1 | 10 | 77 | 67 | 0.48 |
| CSE 1000 016 V1 | 16 | 100 | 84 | 0.55 |
| CSE 1000 025 V1 | 25 | 135 | 110 | 0.66 |
| CSE 1000 032 V1 | 32 | 167 | 135 | 0.75 |
| CSE 1000 040 V1 | 40 | 195 | 155 | 0.84 |
| CSE 1000 050 V1 | 50 | 230 | 180 | 0.94 |

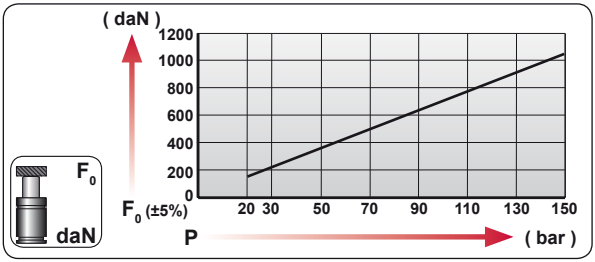


| CODE | bar | psi | F0 daN | F1 daN |
|---|---|---|---|---|
| CSE 1000 050 V1 | 150 | 2175 | 1060 | 1720 |
| CSE-H 1000 050 V1 | 0 | 0 | --- | --- |

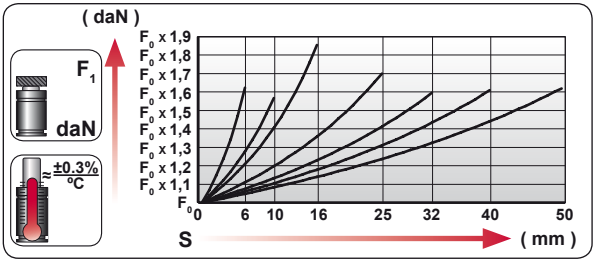


| | |
|---|---|
| ENG | ORDER |
| DEU | BESTELLUNG |
| FRA | COMMANDE |
| ITA | ORDINE |
| ESP | PEDIDO |
| POR | PEDIDO |

F0 daN — S mm

CSE 1000 50

CSE 1000 050 V1

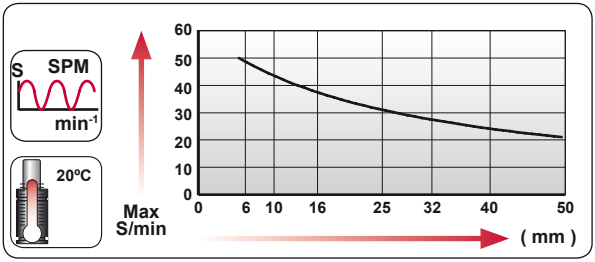


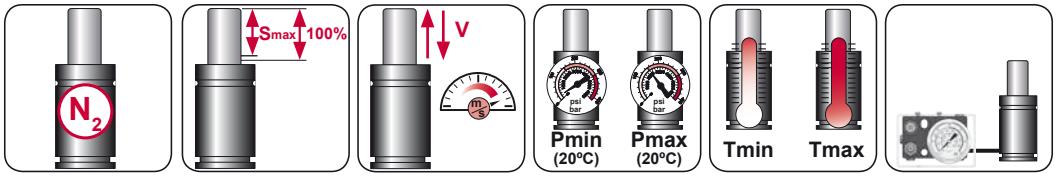


| $N_2$ | Smax < 90% | Vmax 0,5 m/s | bar psi 20 290 | bar psi 150 2175 | ºC ºF 0 32 | ºC ºF 80 176 | 600 CP- |
|---|---|---|---|---|---|---|---|

AZOL GAS

# CSE 1000 V1 MOUNTS

*Power Compact Stroke*

## A14-038

ISO | E24.54.815.G | EM24.54.700/F

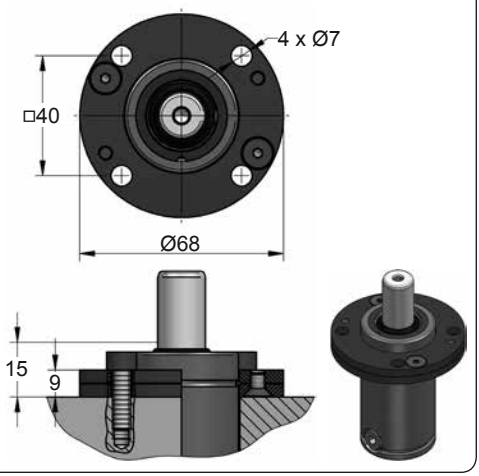


## A34-038

ISO | VDI

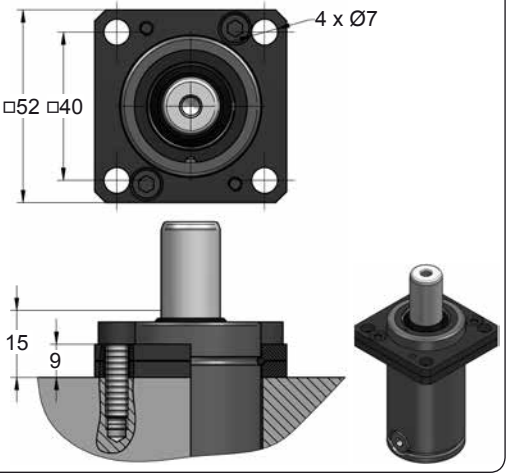


## C20-038

ISO | VDI | E24.54.815.G | EM24.54.700/F

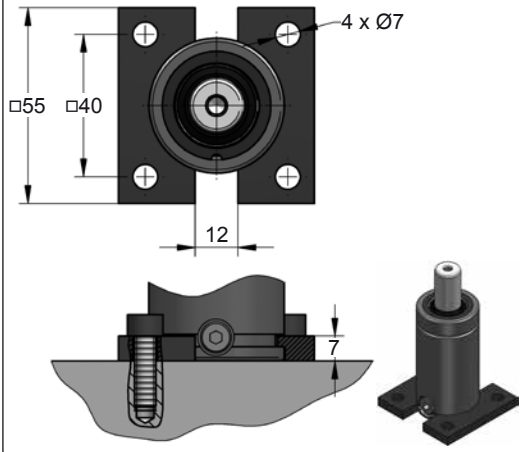


## D02-038

E24.54.815.G

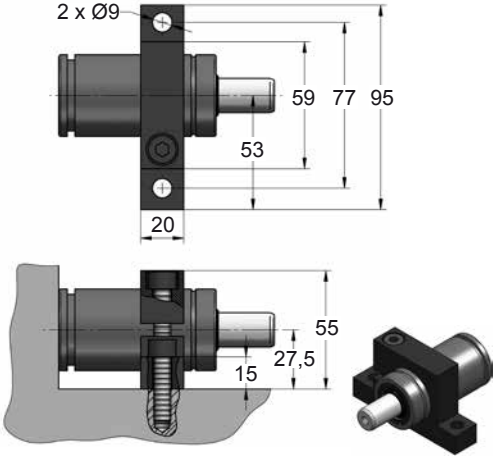









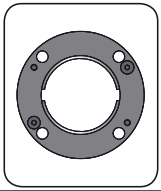

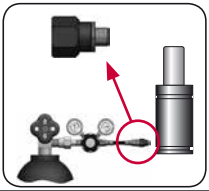

| CODE | | CSE 1000 050 V1 | | A14-038 | 18 GA 5 |
|---|---|---|---|---|---|
| ENG | ORDER | GAS SPRING | REPAIR KIT | FLANGE | CHARGING ADAPTER |
| DEU | BESTELLUNG | GASDRUCKFEDER | ERSATZTEILSATZ | FLANSCHE | LADEADAPTER |
| FRA | COMMANDE | RESSORT À GAZ | KIT DE RÉPARATION | BRIDE | RACCORD DE CHARGE |
| ITA | ORDINE | CILINDRO AD AZOTO | KIT DI MANUTENZIONE | FLANGE | ADATTATORE DI CARICO |
| ESP | PEDIDO | RESORTE DE GAS | KIT DE REPARACION | BRIDA | ADAPTADOR DE CARGA |
| POR | PEDIDO | CILINDRO DE GÁS | KIT DE MANUTENÇÃO | FLANGE | ADAPTADOR DE CARGA |

# CS 1800

*Power Compact Stroke*

AZOL GAS

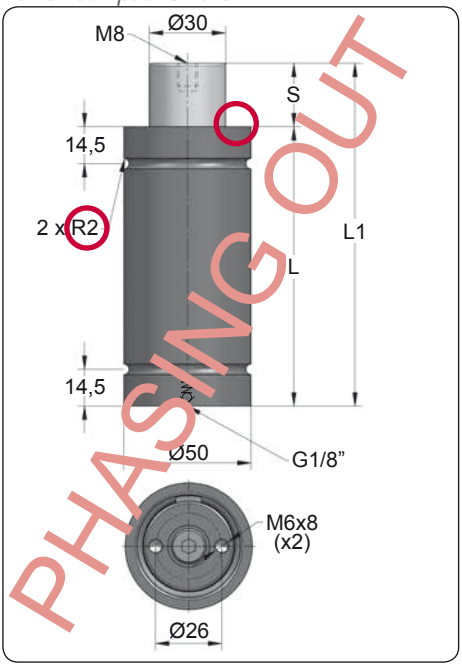


PHASING OUT

| ORDER | S (mm) | L1 ±0,25 (mm) | L (mm) | Kg. |
|---|---|---|---|---|
| CS 1800 006 | 6 | 66 | 60 | 0.70 |
| CS 1800 010 | 10 | 80 | 70 | 0.77 |
| CS 1800 016 | 16 | 106 | 90 | 0.91 |
| CS 1800 025 | 25 | 135 | 110 | 1.06 |
| CS 1800 032 | 32 | 162 | 130 | 1.20 |
| CS 1800 040 | 40 | 190 | 150 | 1.34 |
| CS 1800 050 | 50 | 220 | 170 | 1.50 |

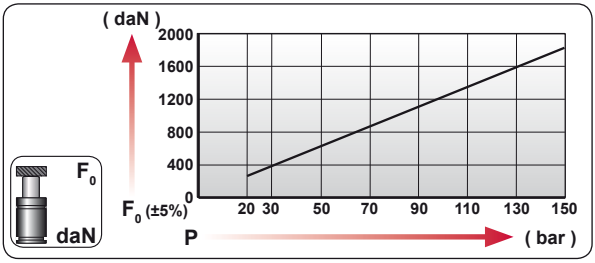


| CODE | bar | psi | F0 daN | F1 daN |
|---|---|---|---|---|
| CS 1800 050 | 150 | 2175 | 1885 | 3015 |
| --------- | --- | --- | --- | --- |

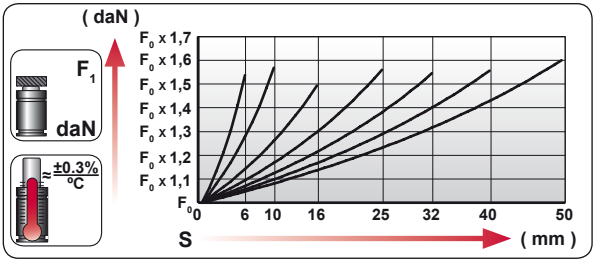


| ENG | ORDER |
|---|---|
| DEU | BESTELLUNG |
| FRA | COMMANDE |
| ITA | ORDINE |
| ESP | PEDIDO |
| POR | PEDIDO |




CS 1800 50

CS 1800 050

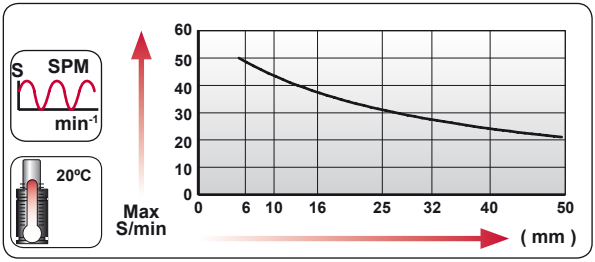


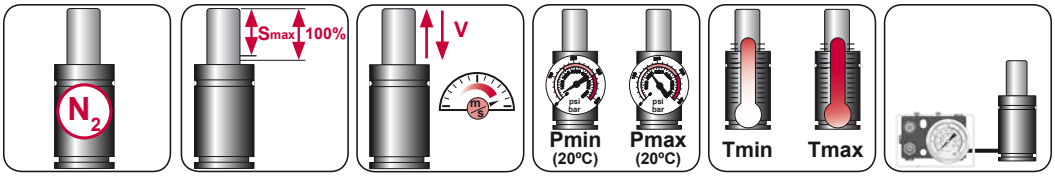


| $N_2$ | Smax < 90% | Vmax 0,5 m/s | bar psi 20 290 | bar psi 150 2175 | °C °F 0 32 | °C °F 80 176 | |
|---|---|---|---|---|---|---|---|

AZOL GAS

# CS 1800 MOUNTS

*Power Compact Stroke*

## A14-050

ISO · E24.54.815.G · EM24.54.700/F

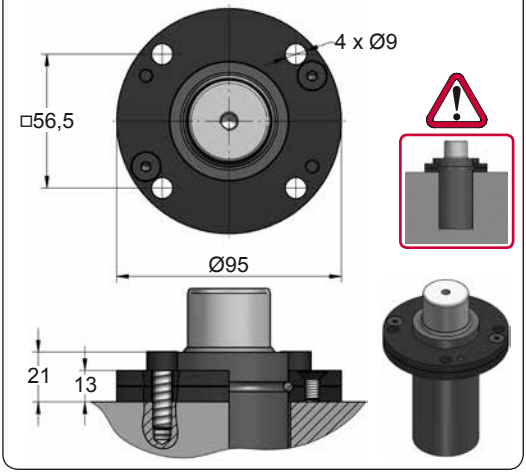


## A19-050

E24.54.815.G

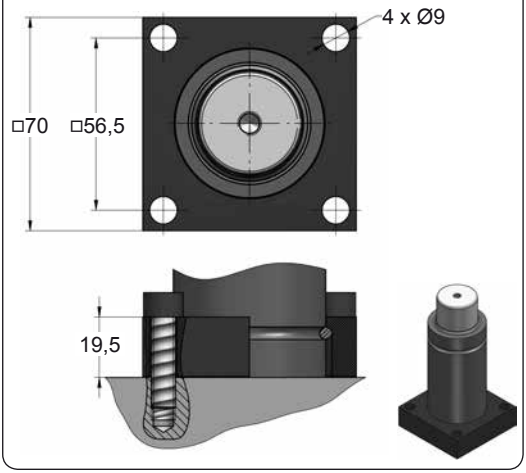


## A34-050

ISO · VDI

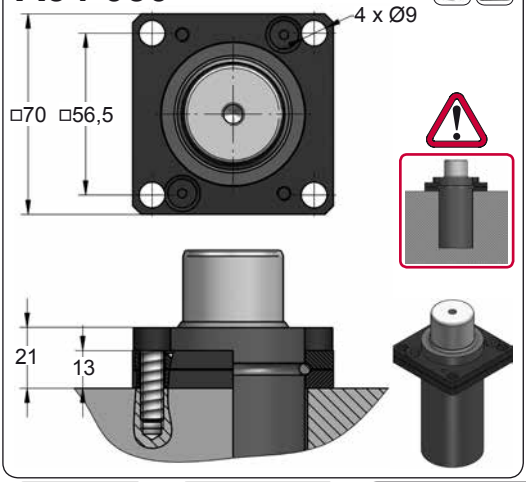


## D02-050

VDI · E24.54.815.G · EM24.54.700/F

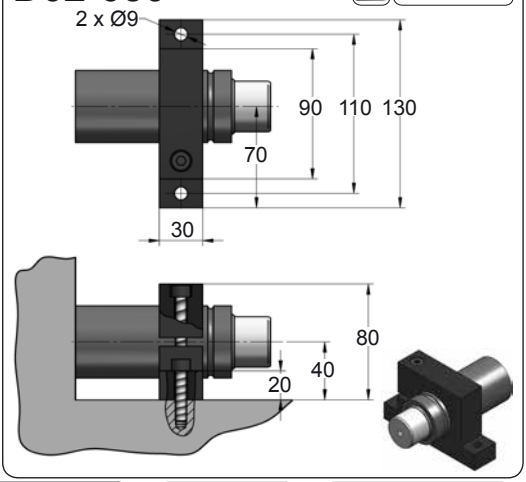









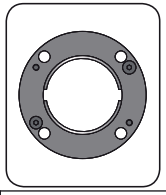

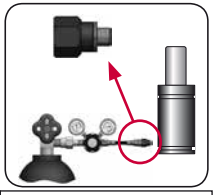

| CODE | | CS 1800 050 | KIT XXXXXXX-S | A14-050 | 18 GA 5 |
|---|---|---|---|---|---|
| ENG | ORDER | GAS SPRING | REPAIR KIT | FLANGE | CHARGING ADAPTER |
| DEU | BESTELLUNG | GASDRUCKFEDER | ERSATZTEILSATZ | FLANSCHE | LADEADAPTER |
| FRA | COMMANDE | RESSORT À GAZ | KIT DE RÉPARATION | BRIDE | RACCORD DE CHARGE |
| ITA | ORDINE | CILINDRO AD AZOTO | KIT DI MANUTENZIONE | FLANGE | ADATTATORE DI CARICO |
| ESP | PEDIDO | RESORTE DE GAS | KIT DE REPARACION | BRIDA | ADAPTADOR DE CARGA |
| POR | PEDIDO | CILINDRO DE GÁS | KIT DE MANUTENÇÃO | FLANGE | ADAPTADOR DE CARGA |

# CS 1800 V1

*Power Compact Stroke*

| BMW B2 4006 | | PSA E24.54.815.G |
|---|---|---|
| | | |
| | | |

AZOL GAS

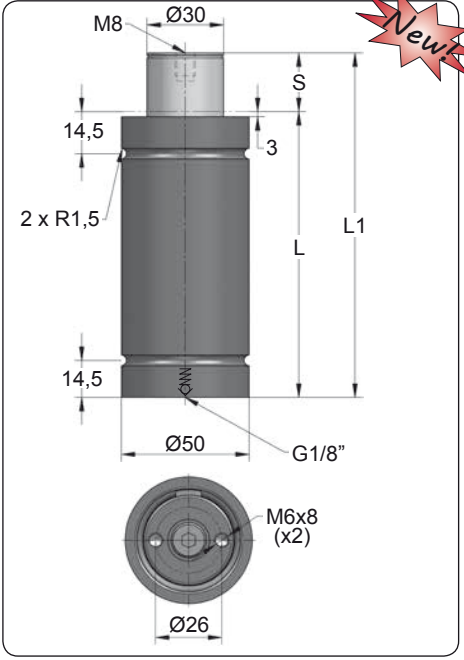


Newt

| ORDER | S (mm) | L1 ±0,25 (mm) | L (mm) | Kg. |
|---|---|---|---|---|
| CS 1800 006 V1 | 6 | 66 | 60 | 0.70 |
| CS 1800 010 V1 | 10 | 80 | 70 | 0.77 |
| CS 1800 016 V1 | 16 | 106 | 90 | 0.91 |
| CS 1800 025 V1 | 25 | 135 | 110 | 1.06 |
| CS 1800 032 V1 | 32 | 162 | 130 | 1.20 |
| CS 1800 040 V1 | 40 | 190 | 150 | 1.34 |
| CS 1800 050 V1 | 50 | 220 | 170 | 1.50 |
| CS 1800 065 V1 | 65 | 271 | 206 | 1.70 |

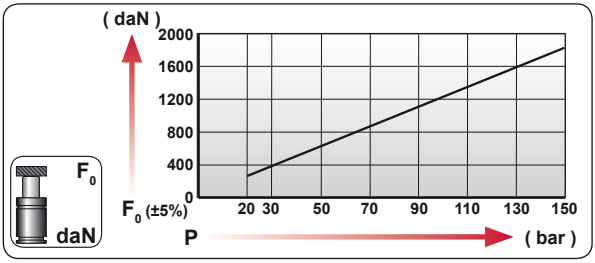


| CODE | | bar | psi | F0 daN | F1 daN |
|---|---|---|---|---|---|
| CS 1800 050 V1 | | 150 | 2175 | 1885 | 3015 |
| --------- | | --- | --- | --- | --- |

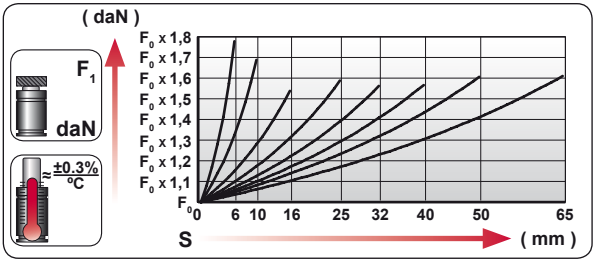


| ENG | ORDER |
|---|---|
| DEU | BESTELLUNG |
| FRA | COMMANDE |
| ITA | ORDINE |
| ESP | PEDIDO |
| POR | PEDIDO |




CS 1800 50

CS 1800 050 V1

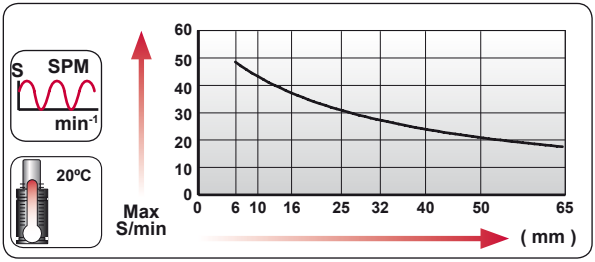


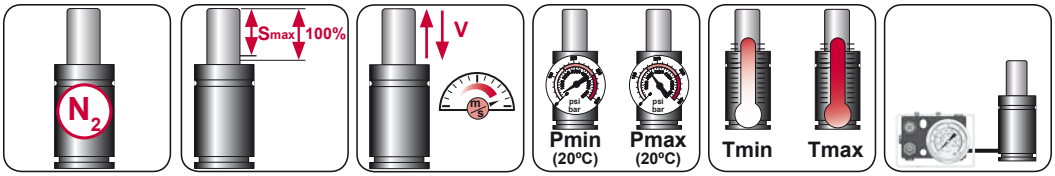


| $N_2$ | Smax < 90% | Vmax 0,5 m/s | bar psi 20 290 | bar psi 150 2175 | ºC ºF 0 32 | ºC ºF 80 176 | |
|---|---|---|---|---|---|---|---|

AZOL GAS

# CS 1800 V1 MOUNTS

*Power Compact Stroke*

## A49-050

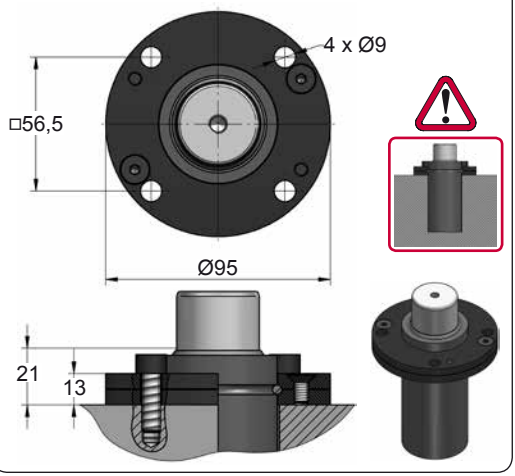


## A54-050

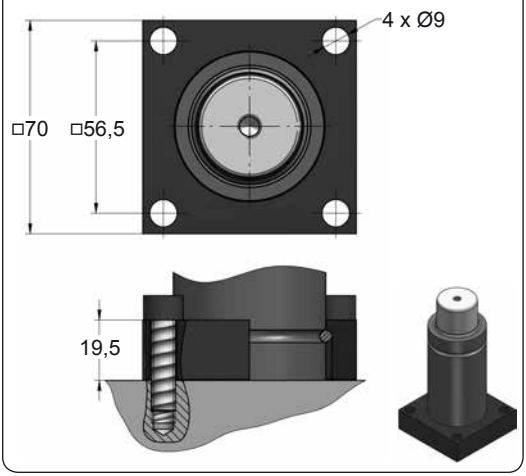


## A59-050

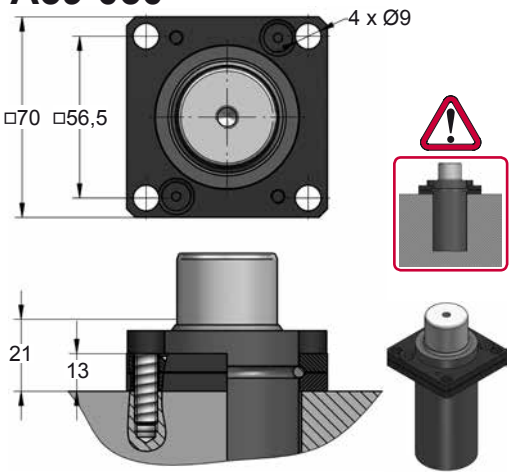


## D02-050

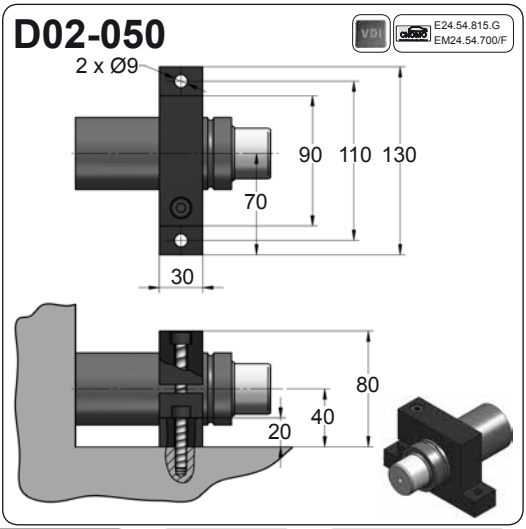









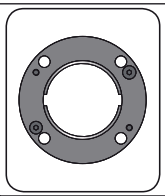

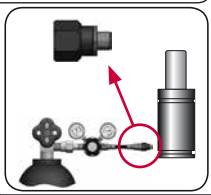

| CODE | | CS 1800 050 V1 | KIT XXXXXXX-S | A49-050 | 18 GA 5 |
|---|---|---|---|---|---|
| ENG | ORDER | GAS SPRING | REPAIR KIT | FLANGE | CHARGING ADAPTER |
| DEU | BESTELLUNG | GASDRUCKFEDER | ERSATZTEILSATZ | FLANSCHE | LADEADAPTER |
| FRA | COMMANDE | RESSORT À GAZ | KIT DE RÉPARATION | BRIDE | RACCORD DE CHARGE |
| ITA | ORDINE | CILINDRO AD AZOTO | KIT DI MANUTENZIONE | FLANGE | ADATTATORE DI CARICO |
| ESP | PEDIDO | RESORTE DE GAS | KIT DE REPARACION | BRIDA | ADAPTADOR DE CARGA |
| POR | PEDIDO | CILINDRO DE GÁS | KIT DE MANUTENÇÃO | FLANGE | ADAPTADOR DE CARGA |

# CSE 1800

*Power Compact Stroke*

AZOL GAS

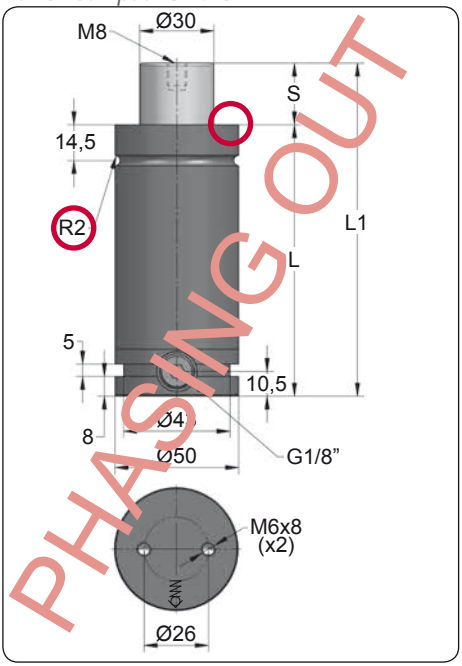


| ORDER | S (mm) | L1 ±0,25 (mm) | L (mm) | Kg. |
|---|---|---|---|---|
| CSE 1800 006 | 6 | 66 | 60 | 0.81 |
| CSE 1800 010 | 10 | 80 | 70 | 0.88 |
| CSE 1800 016 | 16 | 106 | 90 | 1.02 |
| CSE 1800 025 | 25 | 135 | 110 | 1.17 |
| CSE 1800 032 | 32 | 162 | 130 | 1.31 |
| CSE 1800 040 | 40 | 190 | 150 | 1.45 |
| CSE 1800 050 | 50 | 220 | 170 | 1.60 |

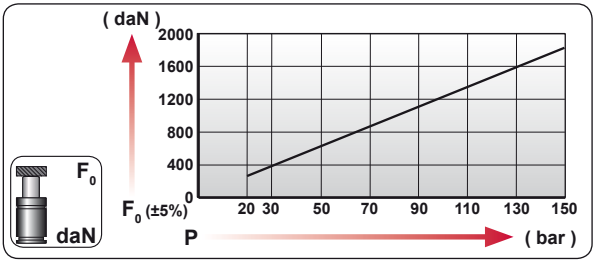


| CODE | bar | psi | F0 daN | F1 daN |
|---|---|---|---|---|
| CSE 1800 050 | 150 | 2175 | 1885 | 3165 |
| CSE-H 1800 050 | 0 | 0 | --- | --- |

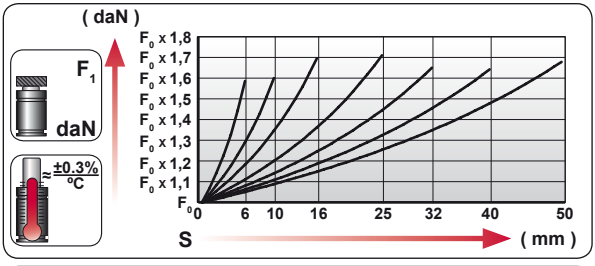


| | |
|---|---|
| ENG | ORDER |
| DEU | BESTELLUNG |
| FRA | COMMANDE |
| ITA | ORDINE |
| ESP | PEDIDO |
| POR | PEDIDO |

F0 daN — S mm

CSE 1800 50

CSE 1800 050

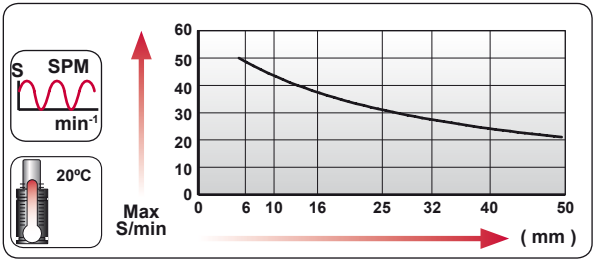


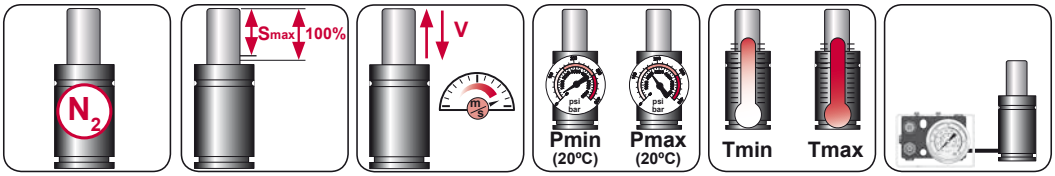


| $N_2$ | Smax < 90% | Vmax 0,5 m/s | bar psi 20 290 | bar psi 150 2175 | ºC ºF 0 32 | ºC ºF 80 176 | 600 CP- |
|---|---|---|---|---|---|---|---|

AZOL GAS

# CSE 1800 MOUNTS

*Power Compact Stroke*

## A14-050

ISO | E24.54.815.G EM24.54.700/F

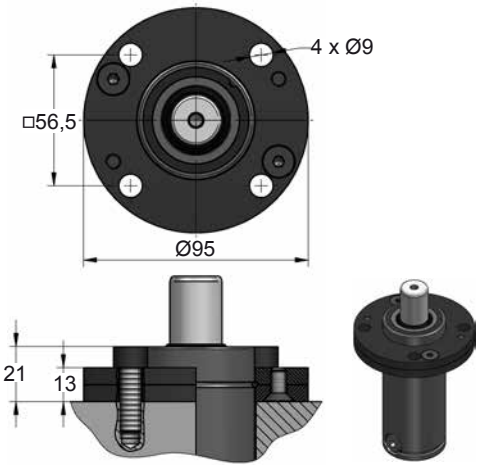


## A34-050

E24.54.815.G

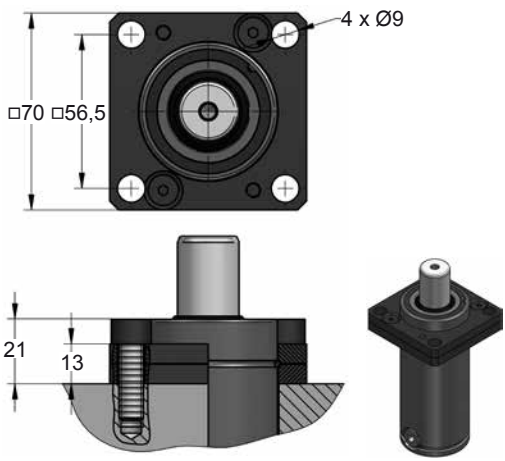


## C20-050

ISO | VDI | E24.54.815.G EM24.54.700/F

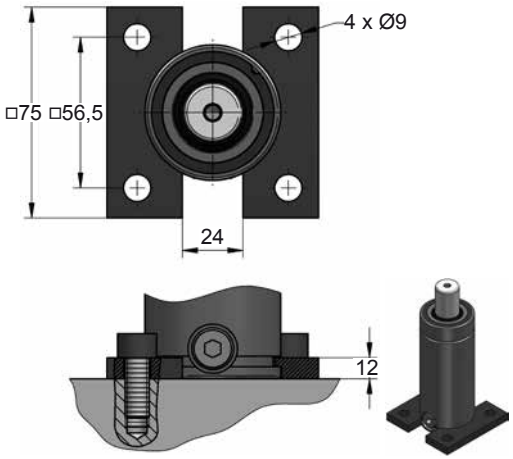


## D02-050

ISO | E24.54.815.G EM24.54.700/F

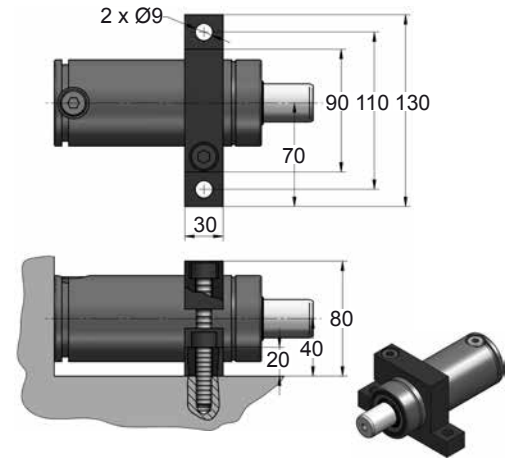









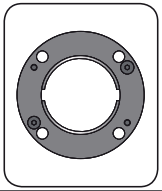

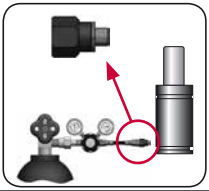

| CODE | | CSE 1800 050 | | A14-050 | 18 GA 5 |
|---|---|---|---|---|---|
| ENG | ORDER | GAS SPRING | REPAIR KIT | FLANGE | CHARGING ADAPTER |
| DEU | BESTELLUNG | GASDRUCKFEDER | ERSATZTEILSATZ | FLANSCHE | LADEADAPTER |
| FRA | COMMANDE | RESSORT À GAZ | KIT DE RÉPARATION | BRIDE | RACCORD DE CHARGE |
| ITA | ORDINE | CILINDRO AD AZOTO | KIT DI MANUTENZIONE | FLANGE | ADATTATORE DI CARICO |
| ESP | PEDIDO | RESORTE DE GAS | KIT DE REPARACION | BRIDA | ADAPTADOR DE CARGA |
| POR | PEDIDO | CILINDRO DE GÁS | KIT DE MANUTENÇÃO | FLANGE | ADAPTADOR DE CARGA |

# CSE 1800 V1

*Power Compact Stroke*

AZOL GAS

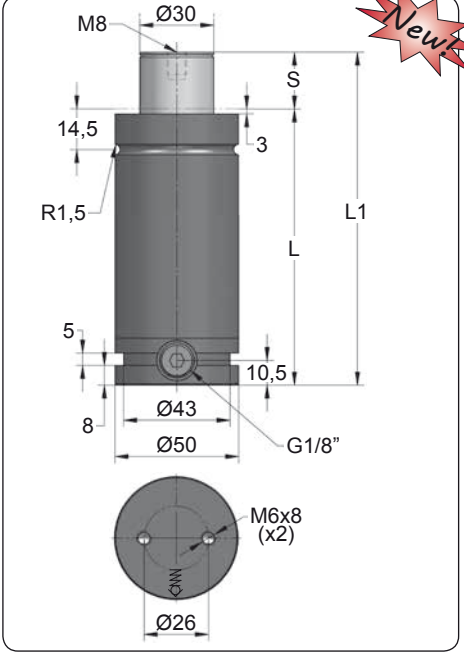


Newt

| ORDER | S (mm) | L1 ±0,25 (mm) | L (mm) | Kg. |
|---|---|---|---|---|
| CSE 1800 006 V1 | 6 | 66 | 60 | 0.81 |
| CSE 1800 010 V1 | 10 | 80 | 70 | 0.88 |
| CSE 1800 016 V1 | 16 | 106 | 90 | 1.02 |
| CSE 1800 025 V1 | 25 | 135 | 110 | 1.17 |
| CSE 1800 032 V1 | 32 | 162 | 130 | 1.31 |
| CSE 1800 040 V1 | 40 | 190 | 150 | 1.45 |
| CSE 1800 050 V1 | 50 | 220 | 170 | 1.60 |

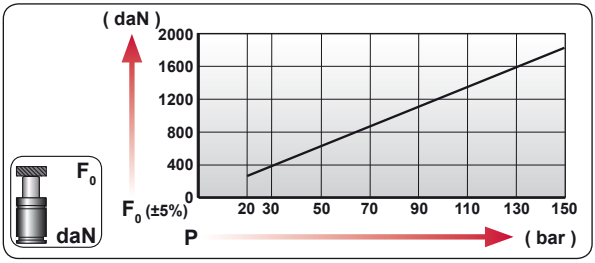


| CODE | bar | psi | F0 daN | F1 daN |
|---|---|---|---|---|
| CSE 1800 050 V1 | 150 | 2175 | 1885 | 3165 |
| CSE-H 1800 050 V1 | 0 | 0 | --- | --- |

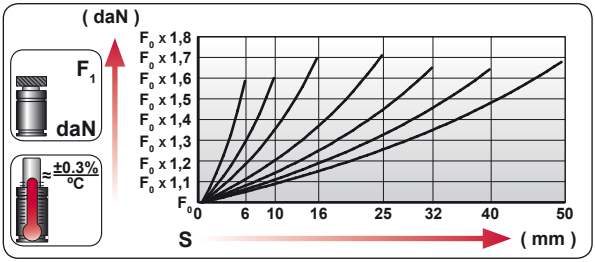


| ENG | ORDER |
|---|---|
| DEU | BESTELLUNG |
| FRA | COMMANDE |
| ITA | ORDINE |
| ESP | PEDIDO |
| POR | PEDIDO |

F0 daN S mm

CSE 1800 50

CSE 1800 050 V1

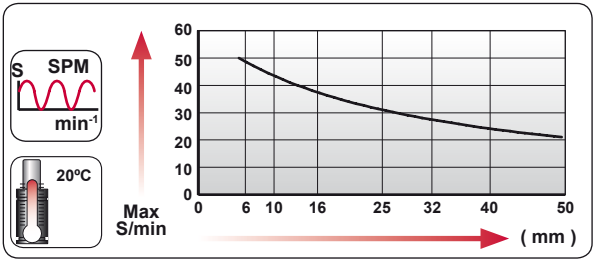


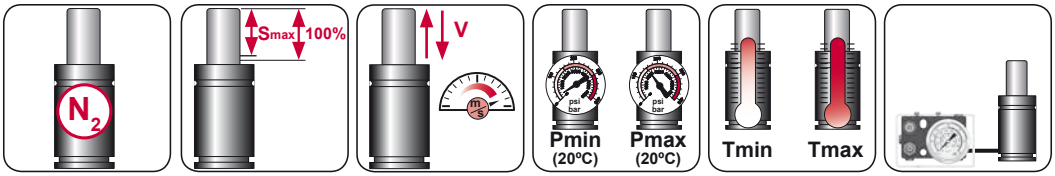


| $N_2$ | Smax < 90% | Vmax 0,5 m/s | bar psi 20 290 | bar psi 150 2175 | ºC ºF 0 32 | ºC ºF 80 176 | 600 CP- |
|---|---|---|---|---|---|---|---|

AZOL GAS

# CSE 1800 V1 MOUNTS

*Power Compact Stroke*

## A49-050

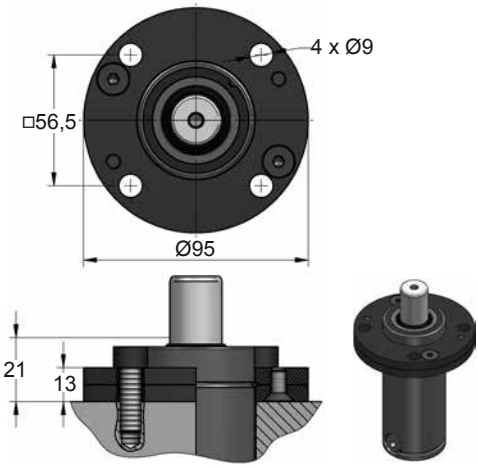


## A59-050

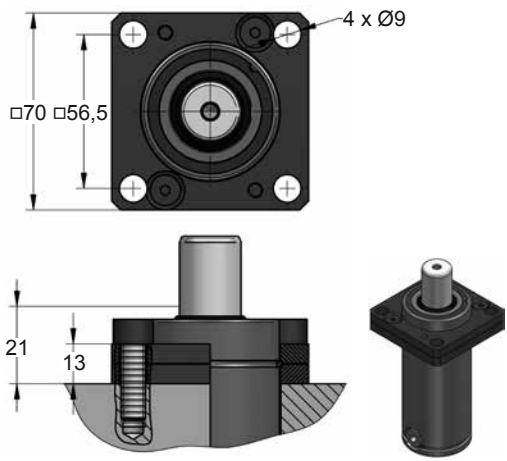


## C20-050

ISO VDI E24.54.815.G EM24.54.700/F

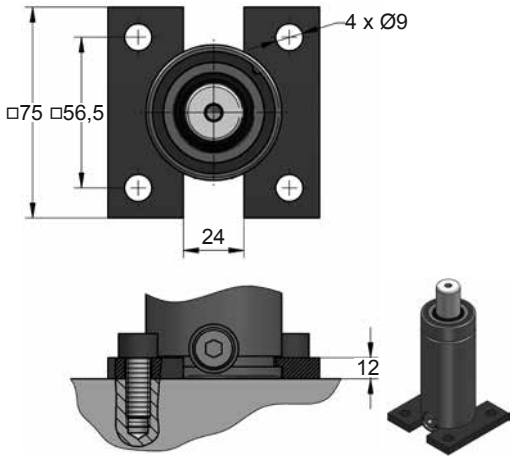


## D02-050

ISO E24.54.815.G EM24.54.700/F

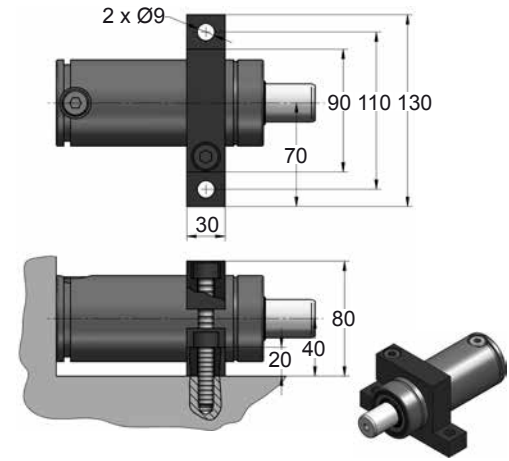









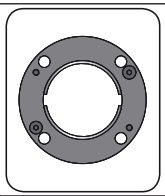

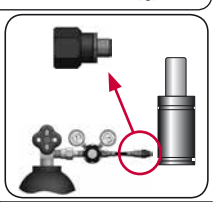

| CODE | | CSE 1800 050 V1 | | A49-050 | 18 GA 5 |
|---|---|---|---|---|---|
| ENG | ORDER | GAS SPRING | REPAIR KIT | FLANGE | CHARGING ADAPTER |
| DEU | BESTELLUNG | GASDRUCKFEDER | ERSATZTEILSATZ | FLANSCHE | LADEADAPTER |
| FRA | COMMANDE | RESSORT À GAZ | KIT DE RÉPARATION | BRIDE | RACCORD DE CHARGE |
| ITA | ORDINE | CILINDRO AD AZOTO | KIT DI MANUTENZIONE | FLANGE | ADATTATORE DI CARICO |
| ESP | PEDIDO | RESORTE DE GAS | KIT DE REPARACION | BRIDA | ADAPTADOR DE CARGA |
| POR | PEDIDO | CILINDRO DE GÁS | KIT DE MANUTENÇÃO | FLANGE | ADAPTADOR DE CARGA |

# CS 3000 V1

*Power Compact Stroke*

AZOL GAS

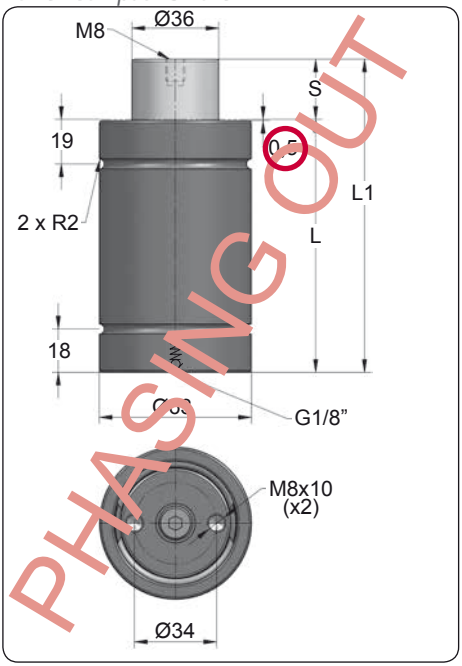


PHASING OUT

| ORDER | S (mm) | L1 ±0,25 (mm) | L (mm) | Kg. |
|---|---|---|---|---|
| CS 3000 010 V1 | 10 | 85 | 75 | 1.32 |
| CS 3000 016 V1 | 16 | 103 | 87 | 1.47 |
| CS 3000 025 V1 | 25 | 130 | 105 | 1.69 |
| CS 3000 032 V1 | 32 | 150 | 118 | 1.85 |
| CS 3000 040 V1 | 40 | 175 | 135 | 2.05 |
| CS 3000 050 V1 | 50 | 205 | 155 | 2.30 |

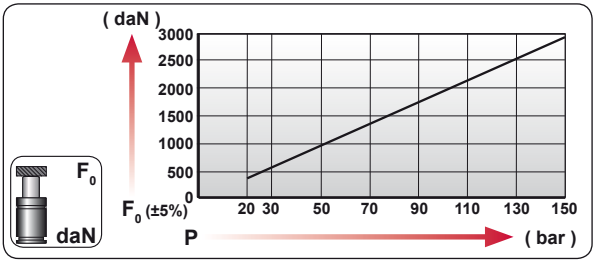


| CODE | bar | psi | $F_0$ daN | $F_1$ daN |
|---|---|---|---|---|
| CS 3000 050 V1 | 150 | 2175 | 2945 | 5385 |
| --------- | --- | --- | --- | --- |

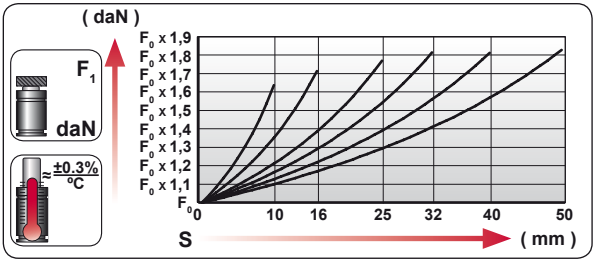


| | |
|---|---|
| ENG | ORDER |
| DEU | BESTELLUNG |
| FRA | COMMANDE |
| ITA | ORDINE |
| ESP | PEDIDO |
| POR | PEDIDO |

$F_0$ daN — S mm

CS 3000 50

CS 3000 050 V1

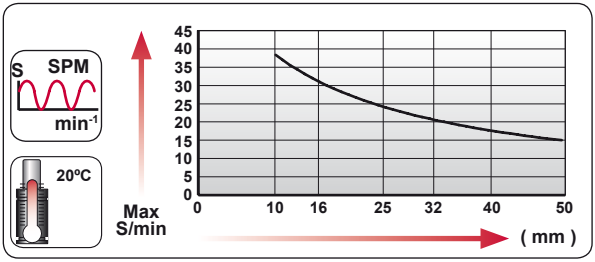


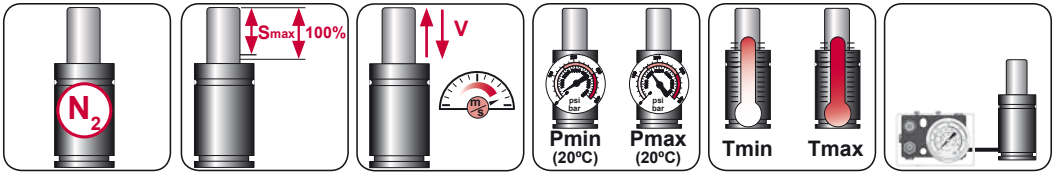


| $N_2$ | Smax < 90% | Vmax 0,5 m/s | bar psi 20 290 | bar psi 150 2175 | ºC ºF 0 32 | ºC ºF 80 176 |
|---|---|---|---|---|---|---|

AZOL GAS

# CS 3000 V1 MOUNTS

*Power Compact Stroke*

## A14-063

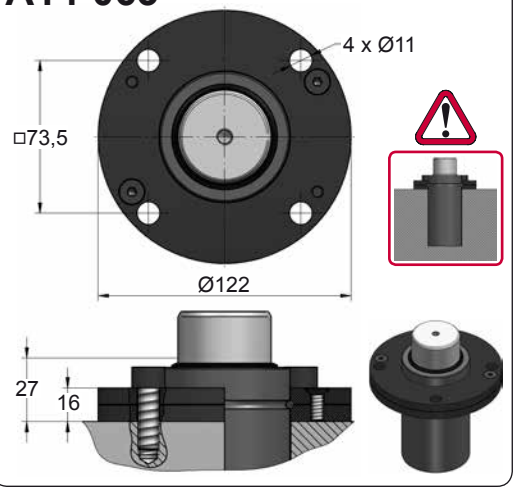


## A39-063

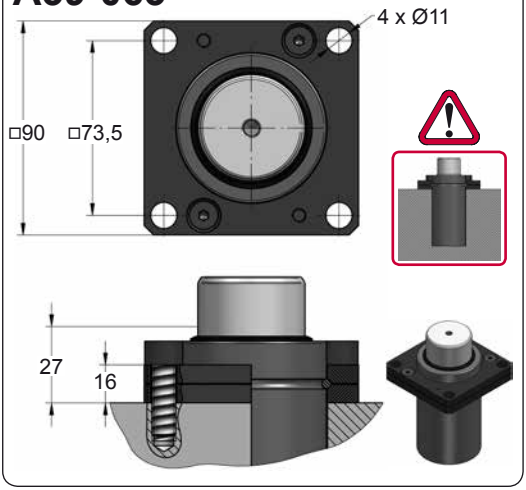


## A69-063

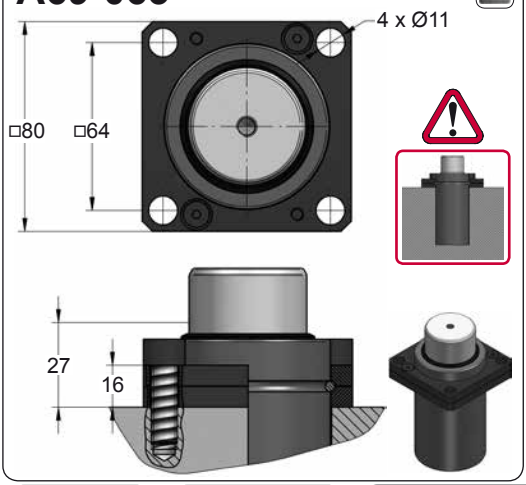


## D02-063

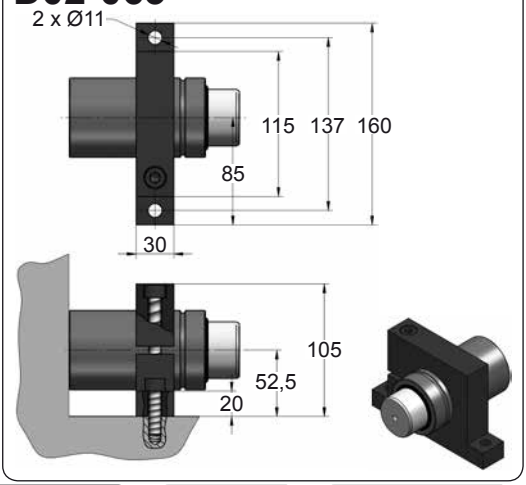









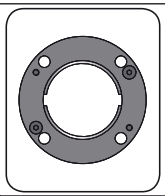

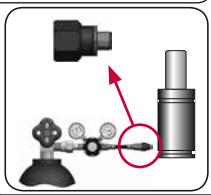

| CODE | | CS 3000 050 V1 | KIT XXXXXXX-S | A14-063 | 18 GA 5 |
|---|---|---|---|---|---|
| ENG | ORDER | GAS SPRING | REPAIR KIT | FLANGE | CHARGING ADAPTER |
| DEU | BESTELLUNG | GASDRUCKFEDER | ERSATZTEILSATZ | FLANSCHE | LADEADAPTER |
| FRA | COMMANDE | RESSORT À GAZ | KIT DE RÉPARATION | BRIDE | RACCORD DE CHARGE |
| ITA | ORDINE | CILINDRO AD AZOTO | KIT DI MANUTENZIONE | FLANGE | ADATTATORE DI CARICO |
| ESP | PEDIDO | RESORTE DE GAS | KIT DE REPARACION | BRIDA | ADAPTADOR DE CARGA |
| POR | PEDIDO | CILINDRO DE GÁS | KIT DE MANUTENÇÃO | FLANGE | ADAPTADOR DE CARGA |

# CS 3000 V2

*Power Compact Stroke*

AZOL GAS

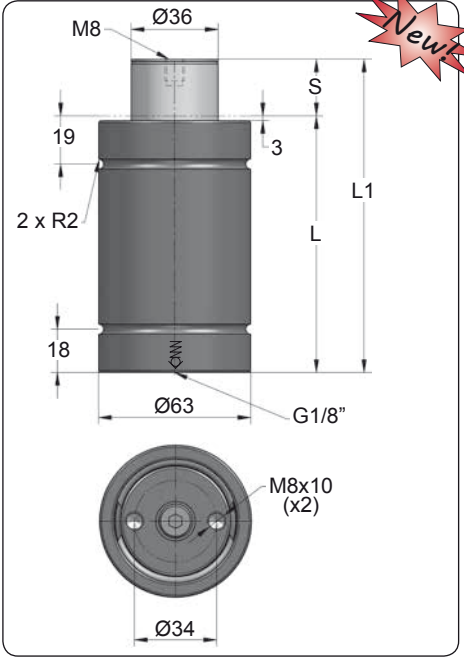


Newt

| ORDER | S (mm) | L1 ±0,25 (mm) | L (mm) | Kg. |
|---|---|---|---|---|
| CS 3000 010 V2 | 10 | 85 | 75 | 1.32 |
| CS 3000 016 V2 | 16 | 103 | 87 | 1.47 |
| CS 3000 025 V2 | 25 | 130 | 105 | 1.69 |
| CS 3000 032 V2 | 32 | 150 | 118 | 1.85 |
| CS 3000 040 V2 | 40 | 175 | 135 | 2.05 |
| CS 3000 050 V2 | 50 | 205 | 155 | 2.30 |
| CS 3000 065 V2 | 65 | 256 | 191 | 2.62 |

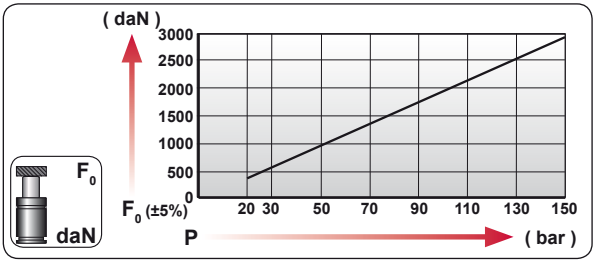


| CODE | | bar | psi | $F_0$ daN | $F_1$ daN |
|---|---|---|---|---|---|
| CS 3000 050 V2 | | 150 | 2175 | 2945 | 5385 |
| --------- | | --- | --- | --- | --- |

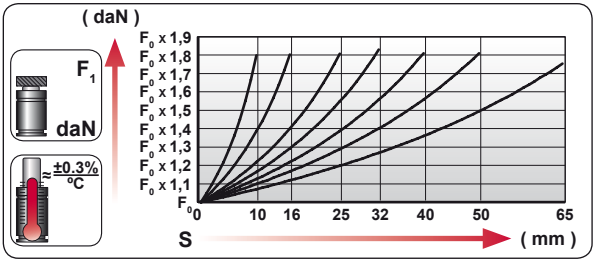


| | |
|---|---|
| ENG | ORDER |
| DEU | BESTELLUNG |
| FRA | COMMANDE |
| ITA | ORDINE |
| ESP | PEDIDO |
| POR | PEDIDO |

$F_0$ daN — S mm

CS 3000 50

CS 3000 050 V2

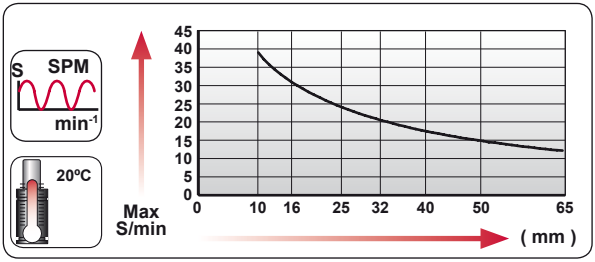


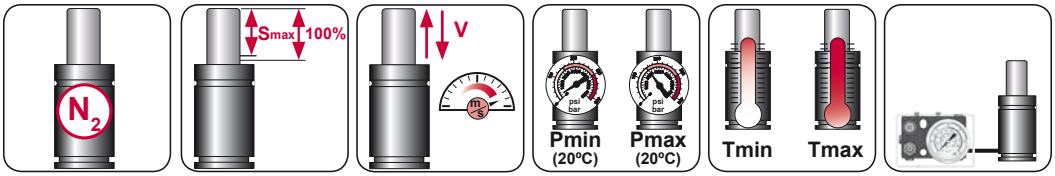


| $N_2$ | Smax < 90% | Vmax 0,5 m/s | bar psi 20 290 | bar psi 150 2175 | ºC ºF 0 32 | ºC ºF 80 176 | |
|---|---|---|---|---|---|---|---|

AZOL GAS

# CS 3000 V2 MOUNTS

*Power Compact Stroke*

## A14-063

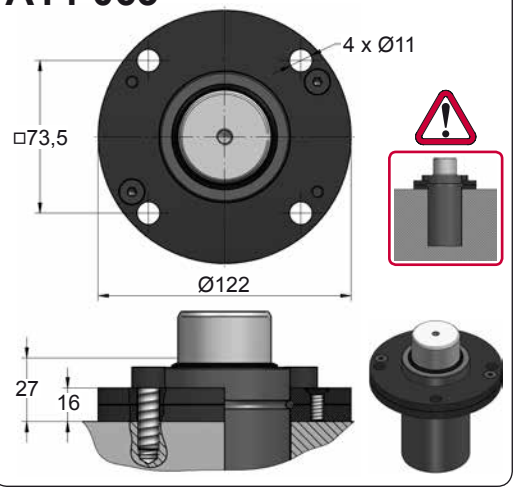


## A39-063

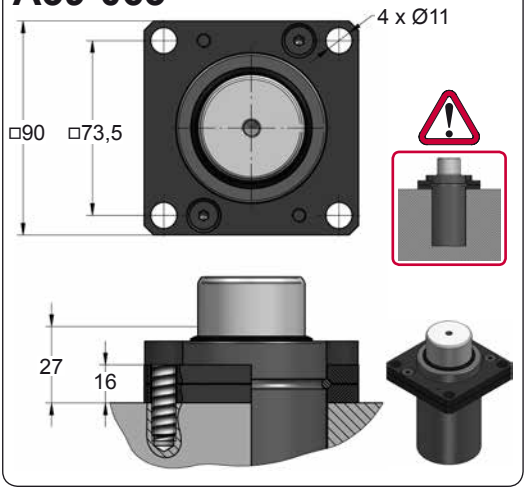


## A69-063

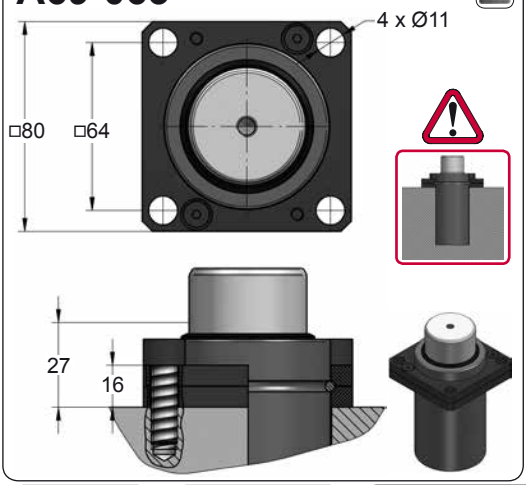


## D02-063

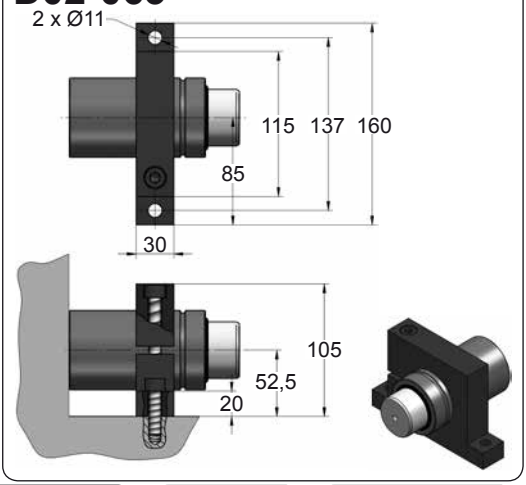









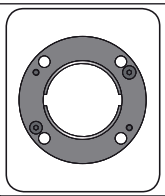

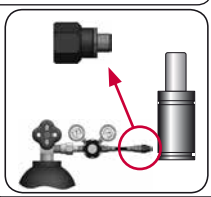

| CODE | | CS 3000 050 V2 | KIT XXXXXXX-S | A14-063 | 18 GA 5 |
|---|---|---|---|---|---|
| ENG | ORDER | GAS SPRING | REPAIR KIT | FLANGE | CHARGING ADAPTER |
| DEU | BESTELLUNG | GASDRUCKFEDER | ERSATZTEILSATZ | FLANSCHE | LADEADAPTER |
| FRA | COMMANDE | RESSORT À GAZ | KIT DE RÉPARATION | BRIDE | RACCORD DE CHARGE |
| ITA | ORDINE | CILINDRO AD AZOTO | KIT DI MANUTENZIONE | FLANGE | ADATTATORE DI CARICO |
| ESP | PEDIDO | RESORTE DE GAS | KIT DE REPARACION | BRIDA | ADAPTADOR DE CARGA |
| POR | PEDIDO | CILINDRO DE GÁS | KIT DE MANUTENÇÃO | FLANGE | ADAPTADOR DE CARGA |

# CSE 3000 V1

*Power Compact Stroke*

AZOL GAS

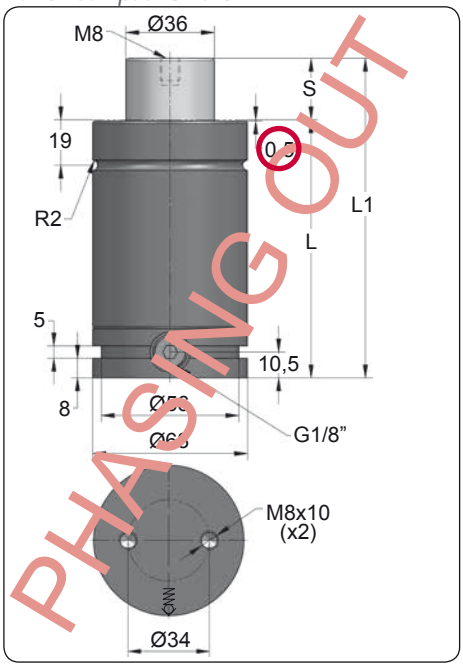


| ORDER | S (mm) | L1 ±0,25 (mm) | L (mm) | Kg. |
|---|---|---|---|---|
| CSE 3000 010 V1 | 10 | 85 | 75 | 1.52 |
| CSE 3000 016 V1 | 16 | 103 | 87 | 1.67 |
| CSE 3000 025 V1 | 25 | 130 | 105 | 1.88 |
| CSE 3000 032 V1 | 32 | 150 | 118 | 2.05 |
| CSE 3000 040 V1 | 40 | 175 | 135 | 2.25 |
| CSE 3000 050 V1 | 50 | 205 | 155 | 2.49 |

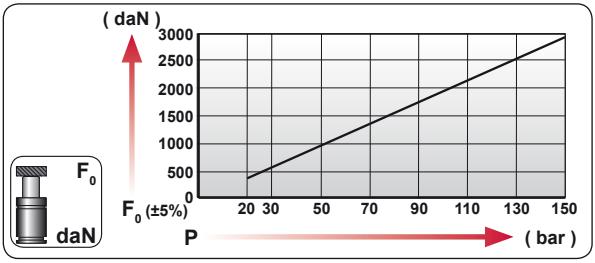


| CODE | bar | psi | $F_0$ daN | $F_1$ daN |
|---|---|---|---|---|
| CSE 3000 050 V1 | 150 | 2175 | 2945 | 5940 |
| CSE-H 3000 050 V1 | 0 | 0 | --- | --- |

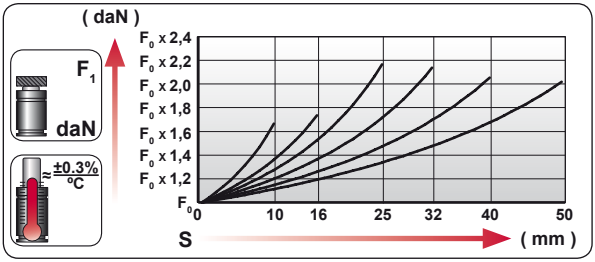


| | |
|---|---|
| ENG | ORDER |
| DEU | BESTELLUNG |
| FRA | COMMANDE |
| ITA | ORDINE |
| ESP | PEDIDO |
| POR | PEDIDO |




CSE 3000 50

CSE 3000 050 V1

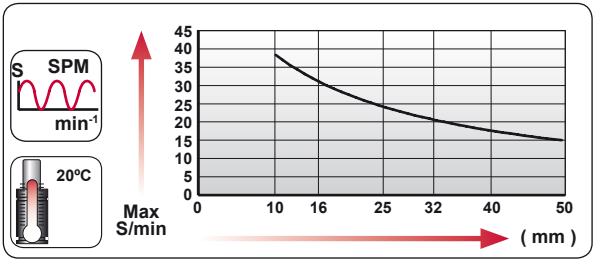


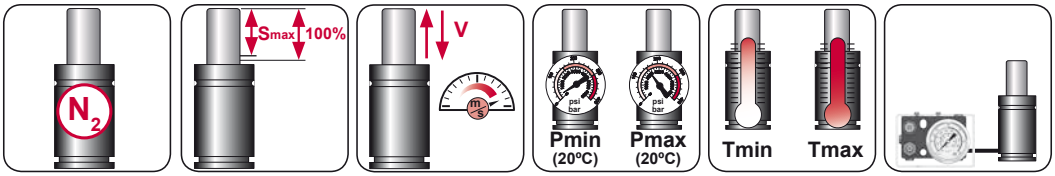


| $N_2$ | Smax < 90% | Vmax 0,5 m/s | bar psi 20 290 | bar psi 150 2175 | ºC ºF 0 32 | ºC ºF 80 176 | 600 CP- |
|---|---|---|---|---|---|---|---|

AZOL GAS

# CSE 3000 V1 MOUNTS

*Power Compact Stroke*

## A14-063

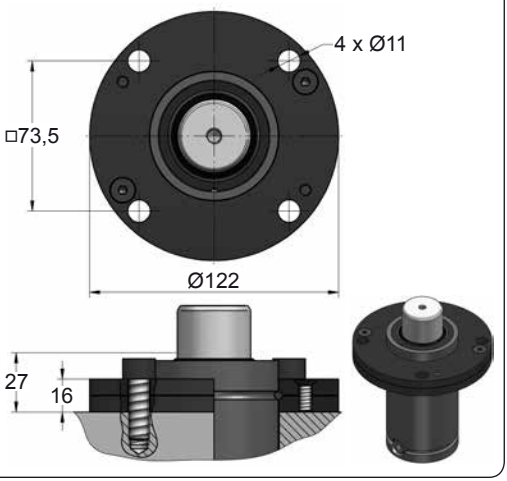


## A69-063

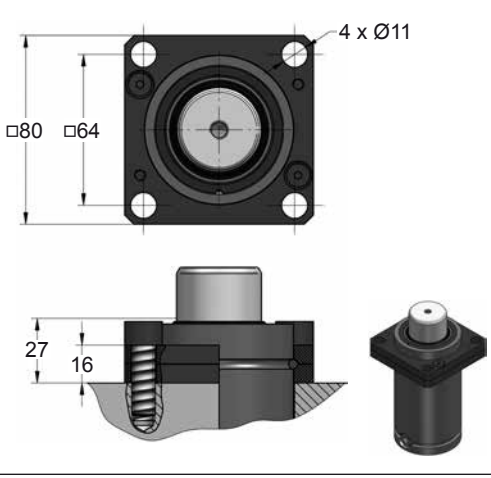


## C35-063

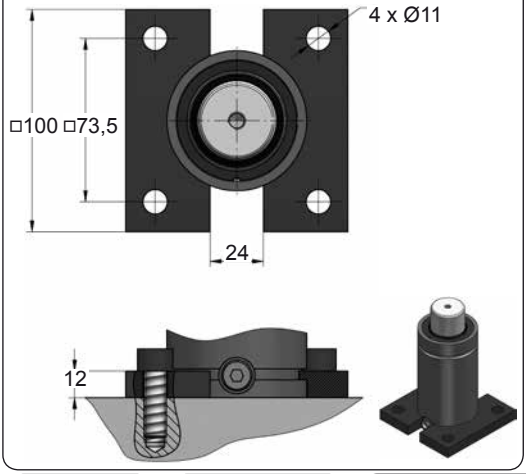


## D02-063

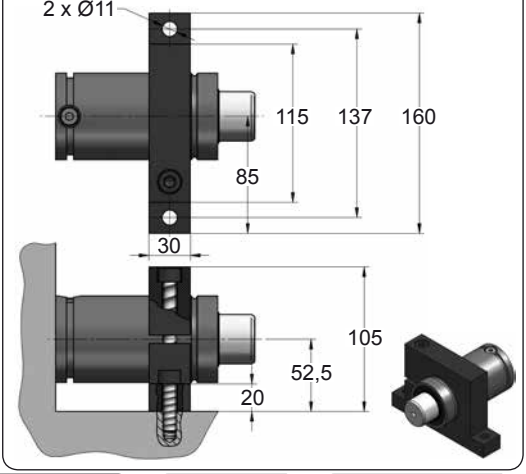









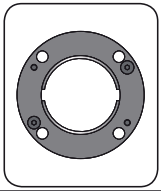

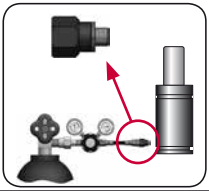

| CODE | | CSE 3000 050 V1 | | A14-063 | 18 GA 5 |
|---|---|---|---|---|---|
| ENG | ORDER | GAS SPRING | REPAIR KIT | FLANGE | CHARGING ADAPTER |
| DEU | BESTELLUNG | GASDRUCKFEDER | ERSATZTEILSATZ | FLANSCHE | LADEADAPTER |
| FRA | COMMANDE | RESSORT À GAZ | KIT DE RÉPARATION | BRIDE | RACCORD DE CHARGE |
| ITA | ORDINE | CILINDRO AD AZOTO | KIT DI MANUTENZIONE | FLANGE | ADATTATORE DI CARICO |
| ESP | PEDIDO | RESORTE DE GAS | KIT DE REPARACION | BRIDA | ADAPTADOR DE CARGA |
| POR | PEDIDO | CILINDRO DE GÁS | KIT DE MANUTENÇÃO | FLANGE | ADAPTADOR DE CARGA |

# CSE 3000 V2

*Power Compact Stroke*

AZOL GAS

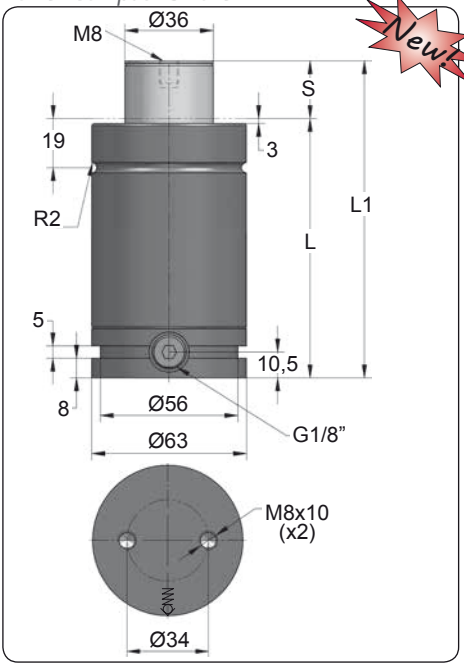


Newt

| ORDER | S (mm) | L1 ±0,25 (mm) | L (mm) | Kg. |
|---|---|---|---|---|
| CSE 3000 010 V2 | 10 | 85 | 75 | 1.52 |
| CSE 3000 016 V2 | 16 | 103 | 87 | 1.67 |
| CSE 3000 025 V2 | 25 | 130 | 105 | 1.88 |
| CSE 3000 032 V2 | 32 | 150 | 118 | 2.05 |
| CSE 3000 040 V2 | 40 | 175 | 135 | 2.25 |
| CSE 3000 050 V2 | 50 | 205 | 155 | 2.49 |

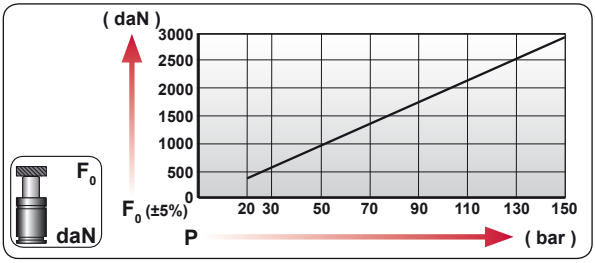


| CODE | bar | psi | F0 daN | F1 daN |
|---|---|---|---|---|
| CSE 3000 050 V2 | 150 | 2175 | 2945 | 5940 |
| CSE-H 3000 050 V2 | 0 | 0 | --- | --- |

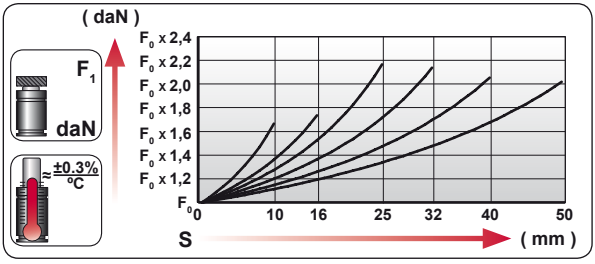


| | |
|---|---|
| ENG | ORDER |
| DEU | BESTELLUNG |
| FRA | COMMANDE |
| ITA | ORDINE |
| ESP | PEDIDO |
| POR | PEDIDO |

F0 daN — S mm

CSE 3000 50

CSE 3000 050 V2

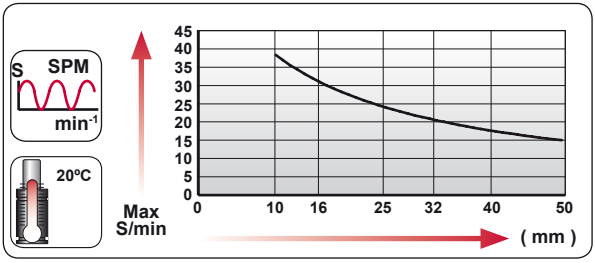


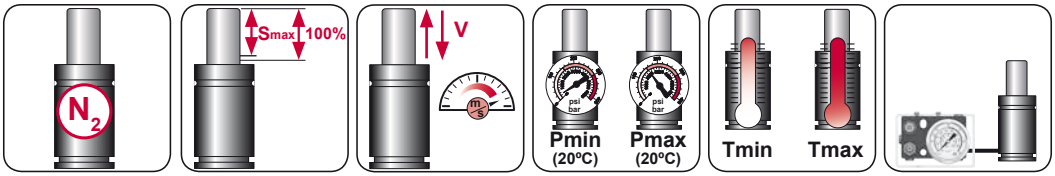


| $N_2$ | Smax < 90% | Vmax 0,5 m/s | bar psi 20 290 | bar psi 150 2175 | ºC ºF 0 32 | ºC ºF 80 176 | 600 CP- |
|---|---|---|---|---|---|---|---|

AZOL GAS

# CSE 3000 V2 MOUNTS

*Power Compact Stroke*

## A14-063

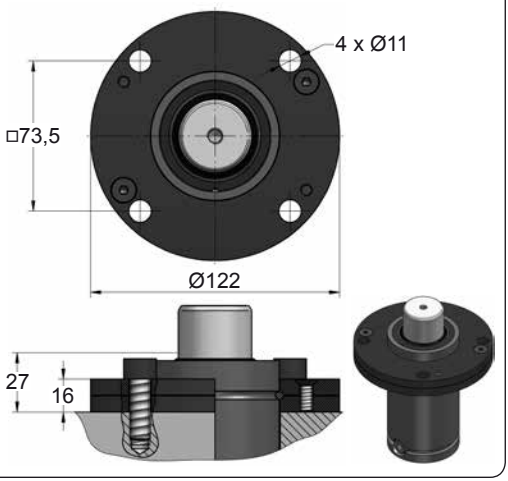


## A69-063

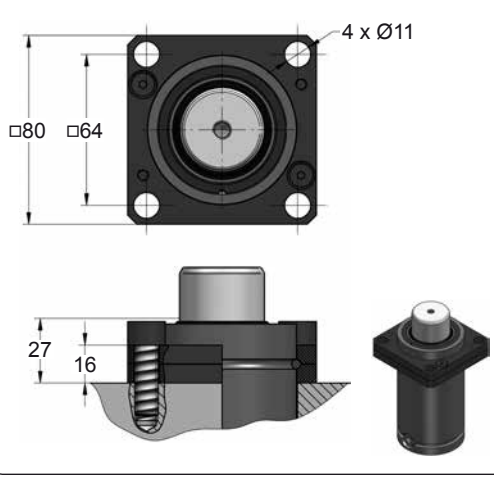


## C35-063

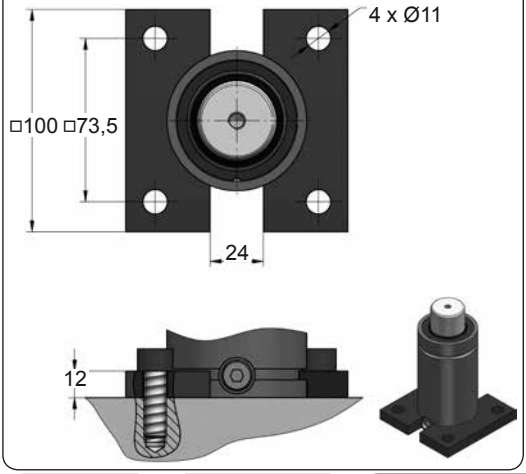


## D02-063

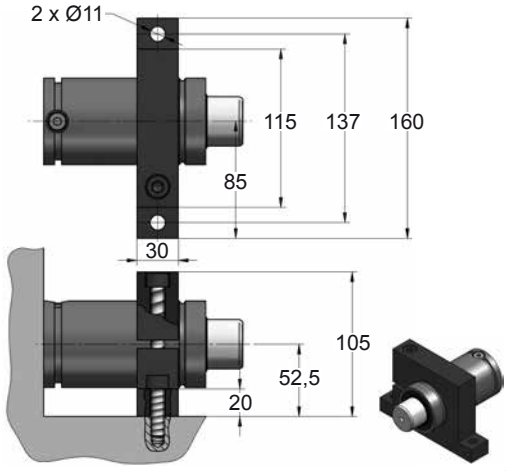









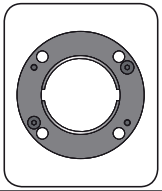

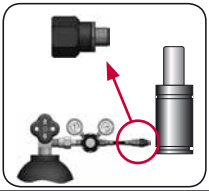

| CODE | | CSE 3000 050 V2 | | A14-063 | 18 GA 5 |
|---|---|---|---|---|---|
| ENG | ORDER | GAS SPRING | REPAIR KIT | FLANGE | CHARGING ADAPTER |
| DEU | BESTELLUNG | GASDRUCKFEDER | ERSATZTEILSATZ | FLANSCHE | LADEADAPTER |
| FRA | COMMANDE | RESSORT À GAZ | KIT DE RÉPARATION | BRIDE | RACCORD DE CHARGE |
| ITA | ORDINE | CILINDRO AD AZOTO | KIT DI MANUTENZIONE | FLANGE | ADATTATORE DI CARICO |
| ESP | PEDIDO | RESORTE DE GAS | KIT DE REPARACION | BRIDA | ADAPTADOR DE CARGA |
| POR | PEDIDO | CILINDRO DE GÁS | KIT DE MANUTENÇÃO | FLANGE | ADAPTADOR DE CARGA |

# CS 4700

*Power Compact Stroke*

AZOL GAS

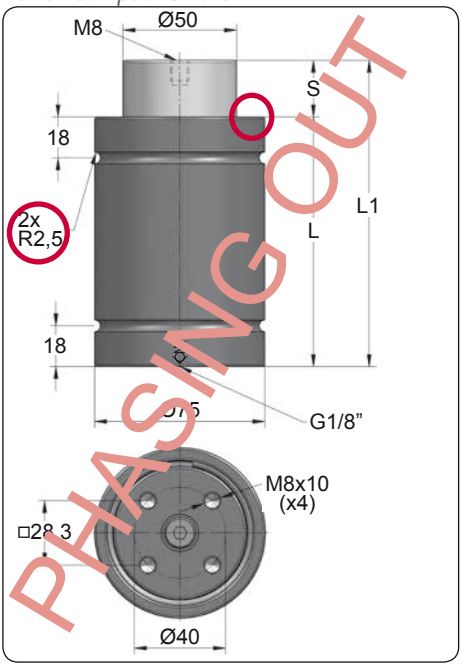


| ORDER | S (mm) | L1 ±0,25 (mm) | L (mm) | Kg. |
|---|---|---|---|---|
| CS 4700 010 | 10 | 80 | 70 | 1.66 |
| CS 4700 016 | 16 | 106 | 90 | 1.95 |
| CS 4700 025 | 25 | 135 | 110 | 2.21 |
| CS 4700 032 | 32 | 167 | 135 | 2.54 |
| CS 4700 040 | 40 | 200 | 160 | 2.86 |
| CS 4700 050 | 50 | 240 | 190 | 3.27 |

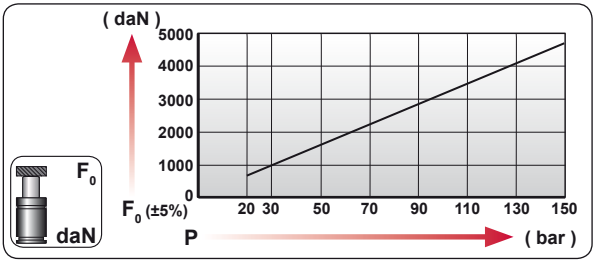


| CODE | bar | psi | F0 daN | F1 daN |
|---|---|---|---|---|
| CS 4700 050 | 150 | 2175 | 4675 | 6885 |
| --------- | --- | --- | --- | --- |

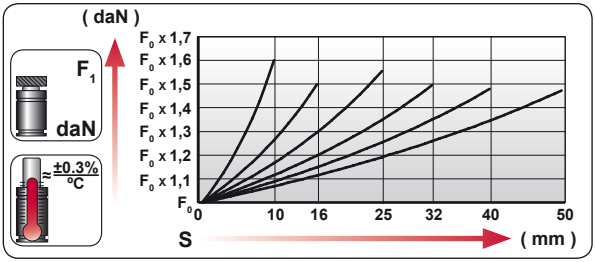


| | ENG | ORDER |
|---|---|---|
| | DEU | BESTELLUNG |
| | FRA | COMMANDE |
| | ITA | ORDINE |
| | ESP | PEDIDO |
| | POR | PEDIDO |

F0 daN — S mm

CS 4700 50

CS 4700 050

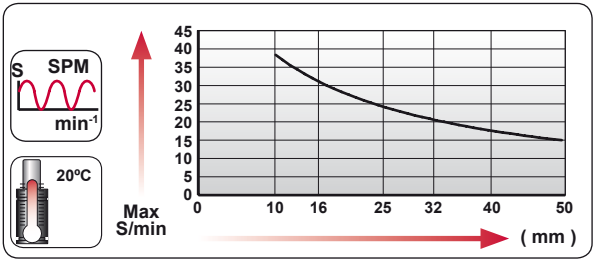


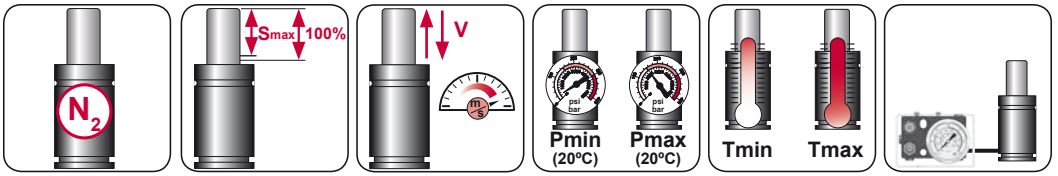


| $N_2$ | Smax < 90% | Vmax 0,5 m/s | bar psi 20 290 | bar psi 150 2175 | °C °F 0 32 | °C °F 80 176 |
|---|---|---|---|---|---|---|

AZOL GAS

# CS 4700 MOUNTS

*Power Compact Stroke*

## A14-075

E24.54.815.G
EM24.54.700/F

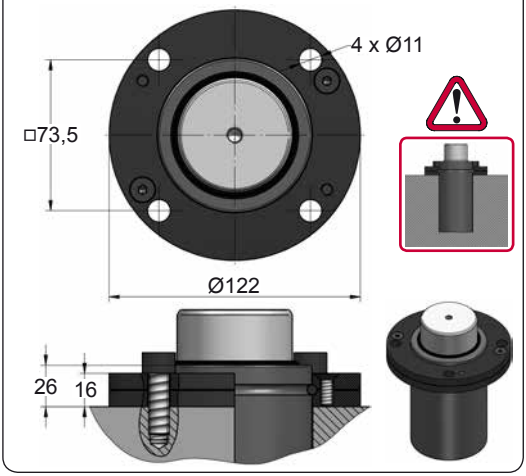


## A19-075

E24.54.815.G

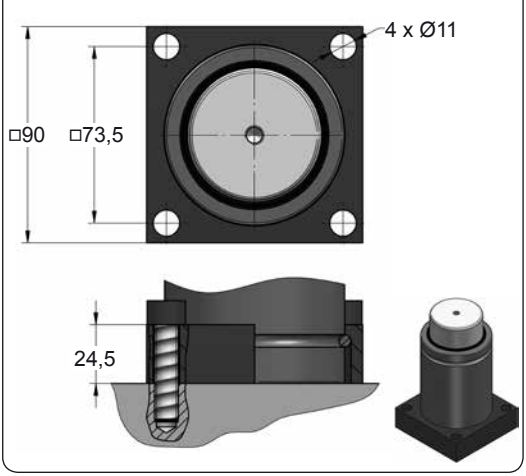


## A34-075

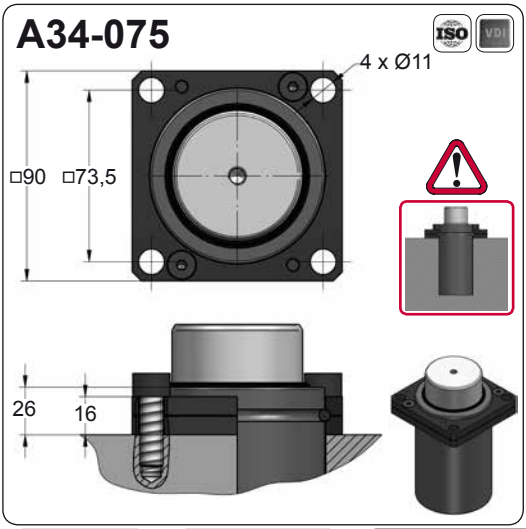


## D02-075

E24.54.815.G
EM24.54.700/F

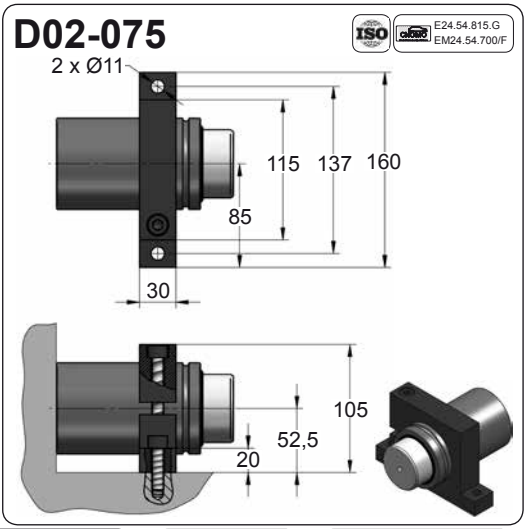









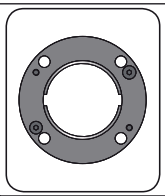

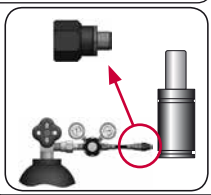

| CODE | | CS 4700 050 | KIT XXXXXXX-S | A14-075 | 18 GA 5 |
|---|---|---|---|---|---|
| ENG | ORDER | GAS SPRING | REPAIR KIT | FLANGE | CHARGING ADAPTER |
| DEU | BESTELLUNG | GASDRUCKFEDER | ERSATZTEILSATZ | FLANSCHE | LADEADAPTER |
| FRA | COMMANDE | RESSORT À GAZ | KIT DE RÉPARATION | BRIDE | RACCORD DE CHARGE |
| ITA | ORDINE | CILINDRO AD AZOTO | KIT DI MANUTENZIONE | FLANGE | ADATTATORE DI CARICO |
| ESP | PEDIDO | RESORTE DE GAS | KIT DE REPARACION | BRIDA | ADAPTADOR DE CARGA |
| POR | PEDIDO | CILINDRO DE GÁS | KIT DE MANUTENÇÃO | FLANGE | ADAPTADOR DE CARGA |

# CS 4700 V1

*Power Compact Stroke*

| BMW B2 4006 | | PSA E24.54.815.G |
|---|---|---|
| | | |
| | | |

AZOL GAS

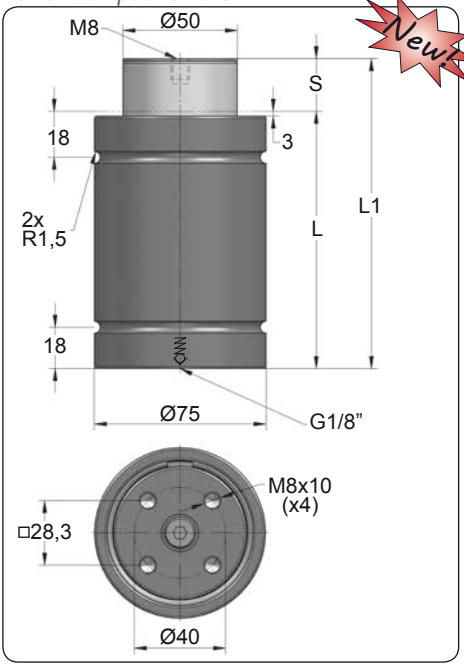


Newt

| ORDER | S (mm) | L1 ±0,25 (mm) | L (mm) | Kg. |
|---|---|---|---|---|
| CS 4700 010 V1 | 10 | 80 | 70 | 1.66 |
| CS 4700 016 V1 | 16 | 106 | 90 | 1.95 |
| CS 4700 025 V1 | 25 | 135 | 110 | 2.21 |
| CS 4700 032 V1 | 32 | 167 | 135 | 2.54 |
| CS 4700 040 V1 | 40 | 200 | 160 | 2.86 |
| CS 4700 050 V1 | 50 | 240 | 190 | 3.27 |
| CS 4700 065 V1 | 65 | 273 | 208 | 3.42 |

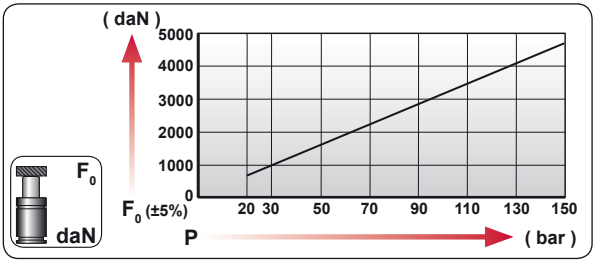


| CODE | bar | psi | F0 daN | F1 daN |
|---|---|---|---|---|
| CS 4700 050 V1 | 150 | 2175 | 4675 | 6885 |
| --------- | --- | --- | --- | --- |

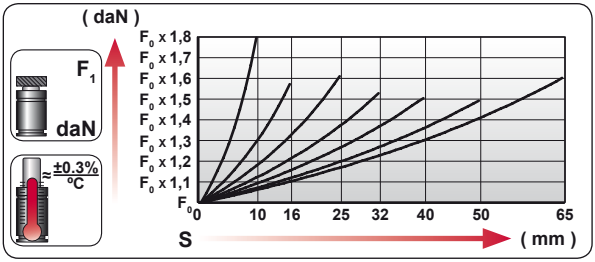


| ENG | ORDER |
|---|---|
| DEU | BESTELLUNG |
| FRA | COMMANDE |
| ITA | ORDINE |
| ESP | PEDIDO |
| POR | PEDIDO |

F0 daN — S mm

CS 4700 50

CS 4700 050 V1

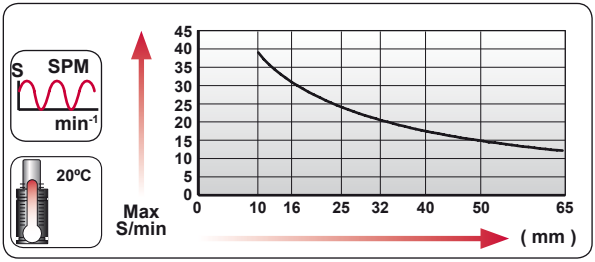


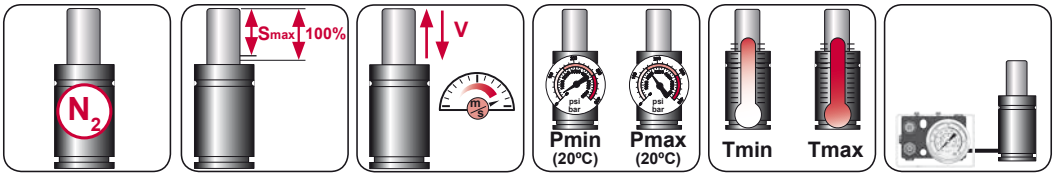


| $N_2$ | Smax < 90% | Vmax 0,5 m/s | bar psi 20 290 | bar psi 150 2175 | ºC ºF 0 32 | ºC ºF 80 176 | |
|---|---|---|---|---|---|---|---|

AZOL GAS

# CS 4700 V1 MOUNTS

*Power Compact Stroke*

## A49-075

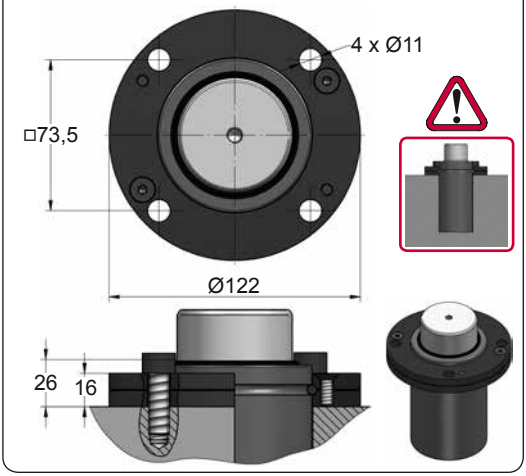


## A54-075

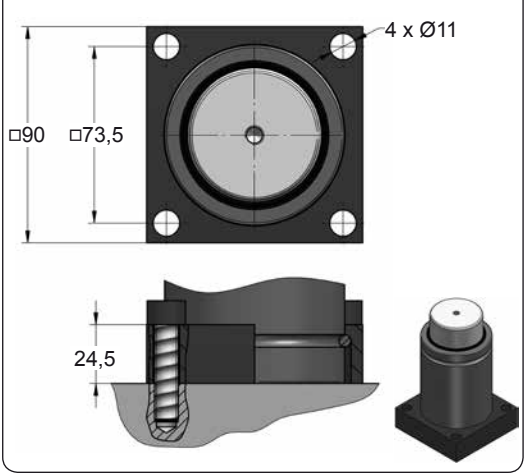


## A59-075

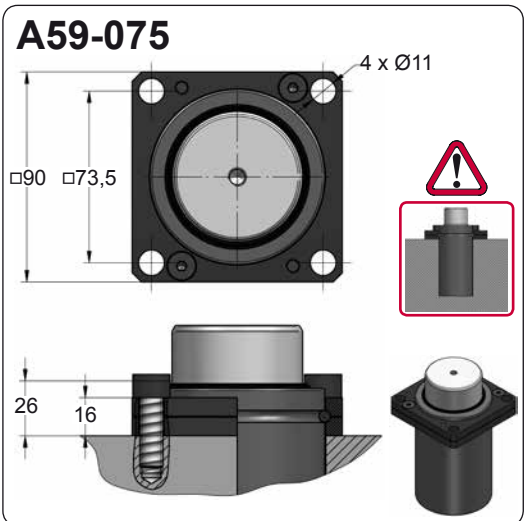


## D02-075

ISO E24.54.815.G EM24.54.700/F

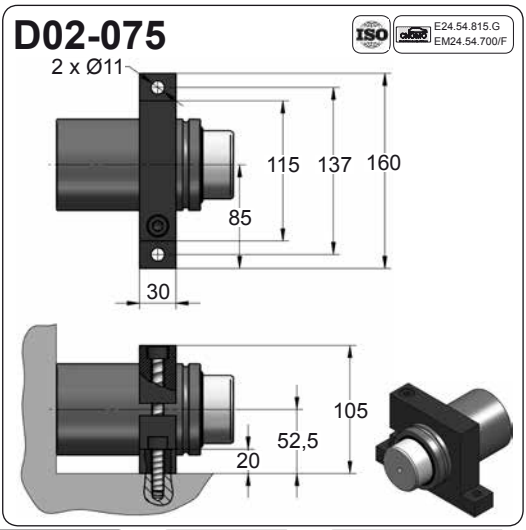









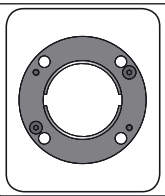

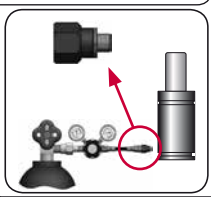

| CODE | | CS 4700 050 V1 | KIT XXXXXXX-S | A49-075 | 18 GA 5 |
|---|---|---|---|---|---|
| ENG | ORDER | GAS SPRING | REPAIR KIT | FLANGE | CHARGING ADAPTER |
| DEU | BESTELLUNG | GASDRUCKFEDER | ERSATZTEILSATZ | FLANSCHE | LADEADAPTER |
| FRA | COMMANDE | RESSORT À GAZ | KIT DE RÉPARATION | BRIDE | RACCORD DE CHARGE |
| ITA | ORDINE | CILINDRO AD AZOTO | KIT DI MANUTENZIONE | FLANGE | ADATTATORE DI CARICO |
| ESP | PEDIDO | RESORTE DE GAS | KIT DE REPARACION | BRIDA | ADAPTADOR DE CARGA |
| POR | PEDIDO | CILINDRO DE GÁS | KIT DE MANUTENÇÃO | FLANGE | ADAPTADOR DE CARGA |

# CSE 4700

*Power Compact Stroke*

AZOL GAS

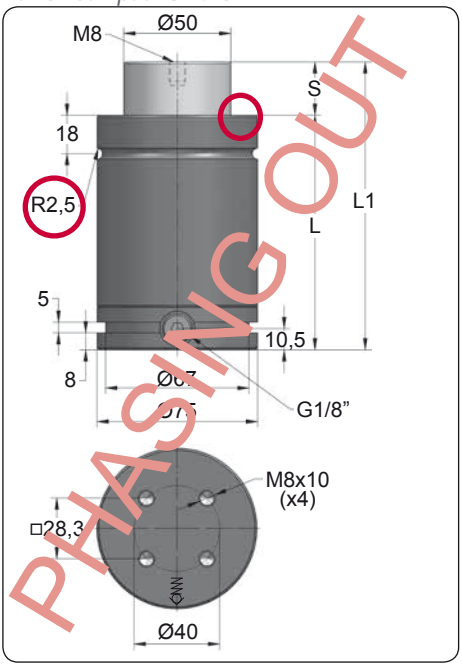


| ORDER | S (mm) | L1 ±0,25 (mm) | L (mm) | Kg. |
|---|---|---|---|---|
| CSE 4700 010 | 10 | 80 | 70 | 1.88 |
| CSE 4700 016 | 16 | 106 | 90 | 2.14 |
| CSE 4700 025 | 25 | 135 | 110 | 2.43 |
| CSE 4700 032 | 32 | 167 | 135 | 2.75 |
| CSE 4700 040 | 40 | 200 | 160 | 3.08 |
| CSE 4700 050 | 50 | 240 | 190 | 3.49 |

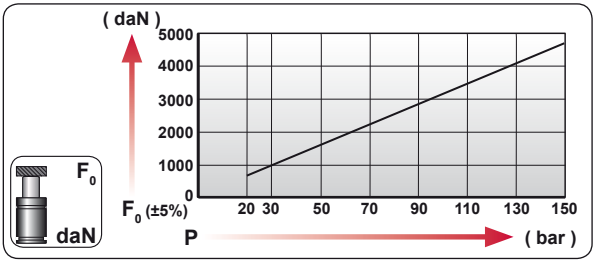


| CODE | bar | psi | F0 daN | F1 daN |
|---|---|---|---|---|
| CSE 4700 050 | 150 | 2175 | 4675 | 7005 |
| CSE-H 4700 050 | 0 | 0 | --- | --- |

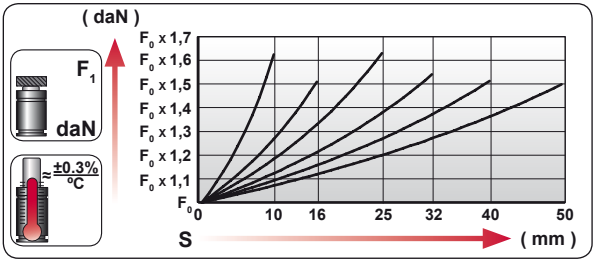


| | |
|---|---|
| ENG | ORDER |
| DEU | BESTELLUNG |
| FRA | COMMANDE |
| ITA | ORDINE |
| ESP | PEDIDO |
| POR | PEDIDO |

F0 daN — S mm

CSE 4700 50

CSE 4700 050

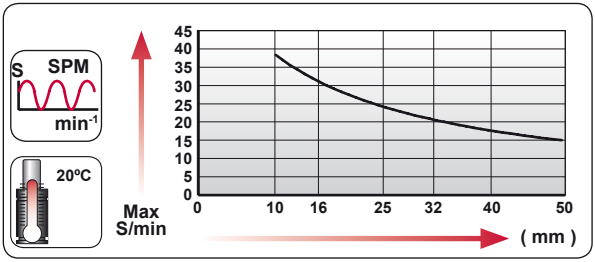


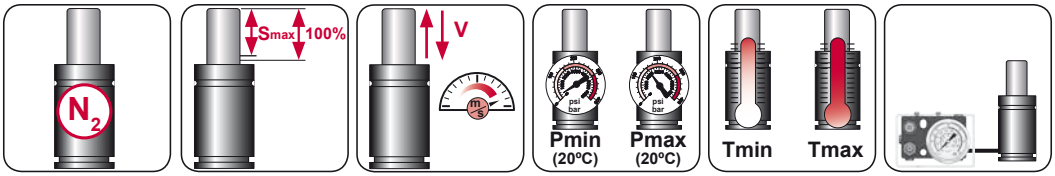


| $N_2$ | Smax < 90% | Vmax 0,5 m/s | bar psi 20 290 | bar psi 150 2175 | ºC ºF 0 32 | ºC ºF 80 176 | 600 CP- |
|---|---|---|---|---|---|---|---|

AZOL GAS

# CSE 4700 MOUNTS

*Power Compact Stroke*

## A14-075

ISO E24.54.815.G EM24.54.700/F

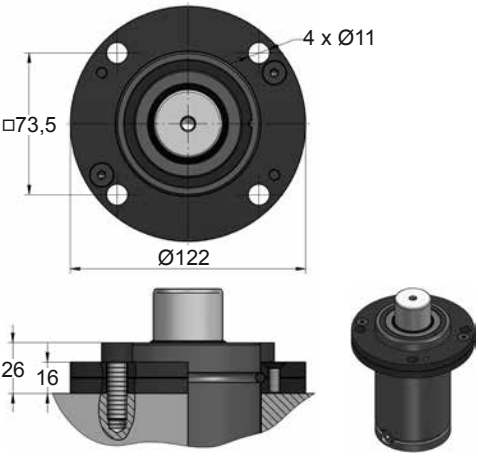


## A34-075

ISO VDI

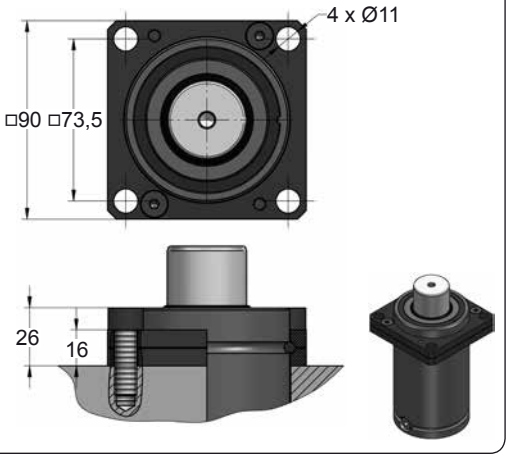


## C20-075

ISO VDI E24.54.815.G EM24.54.700/F

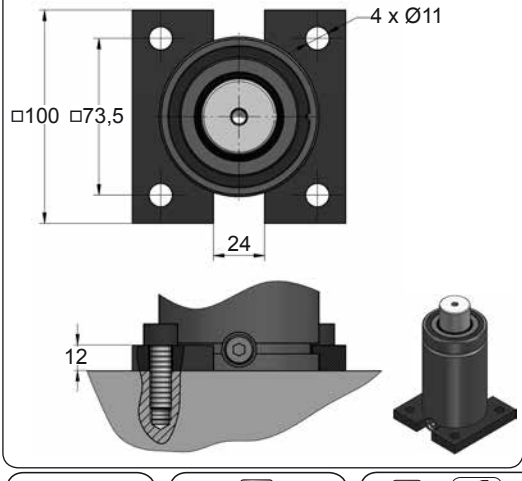


## D02-075

ISO E24.54.815.G EM24.54.700/F

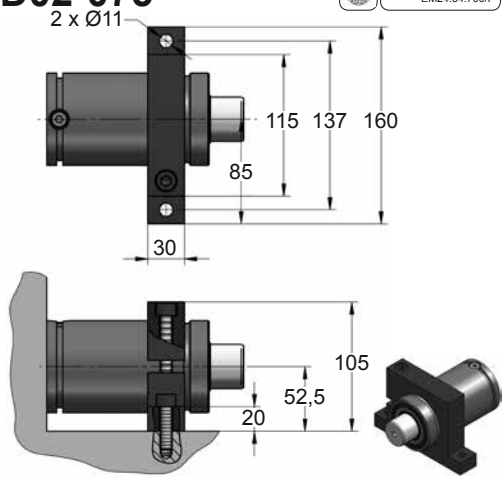




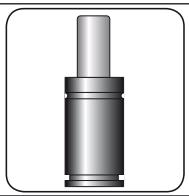




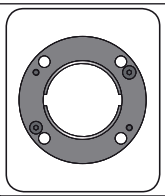

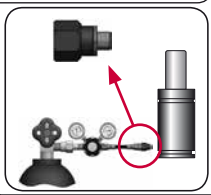

| CODE | | CSE 4700 050 | | A14-075 | 18 GA 5 |
|---|---|---|---|---|---|
| ENG | ORDER | GAS SPRING | REPAIR KIT | FLANGE | CHARGING ADAPTER |
| DEU | BESTELLUNG | GASDRUCKFEDER | ERSATZTEILSATZ | FLANSCHE | LADEADAPTER |
| FRA | COMMANDE | RESSORT À GAZ | KIT DE RÉPARATION | BRIDE | RACCORD DE CHARGE |
| ITA | ORDINE | CILINDRO AD AZOTO | KIT DI MANUTENZIONE | FLANGE | ADATTATORE DI CARICO |
| ESP | PEDIDO | RESORTE DE GAS | KIT DE REPARACION | BRIDA | ADAPTADOR DE CARGA |
| POR | PEDIDO | CILINDRO DE GÁS | KIT DE MANUTENÇÃO | FLANGE | ADAPTADOR DE CARGA |

# CSE 4700 V1

*Power Compact Stroke*

AZOL GAS

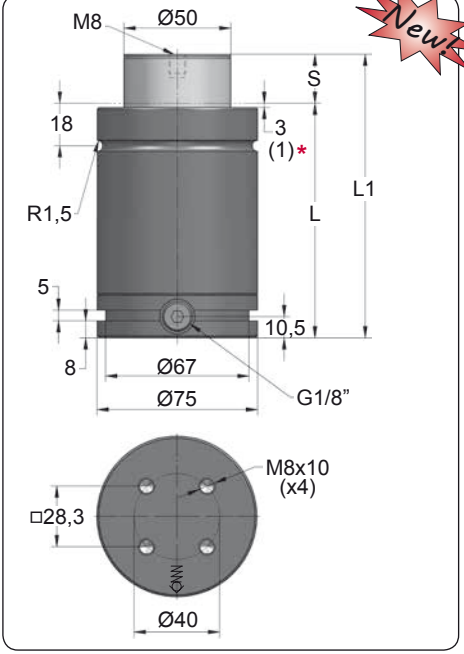


Newt

| ORDER | S (mm) | L1 ±0,25 (mm) | L (mm) | Kg. |
|---|---|---|---|---|
| CSE 4700 010 V1 * | 10 | 80 | 70 | 1.88 |
| CSE 4700 016 V1 | 16 | 106 | 90 | 2.14 |
| CSE 4700 025 V1 | 25 | 135 | 110 | 2.43 |
| CSE 4700 032 V1 | 32 | 167 | 135 | 2.75 |
| CSE 4700 040 V1 | 40 | 200 | 160 | 3.08 |
| CSE 4700 050 V1 | 50 | 240 | 190 | 3.49 |

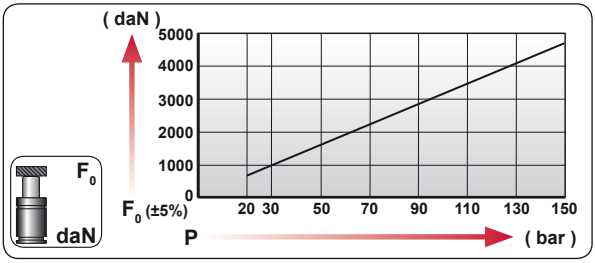


| CODE | bar | psi | F0 daN | F1 daN |
|---|---|---|---|---|
| CSE 4700 050 V1 | 150 | 2175 | 4675 | 7005 |
| CSE-H 4700 050 V1 | 0 | 0 | --- | --- |

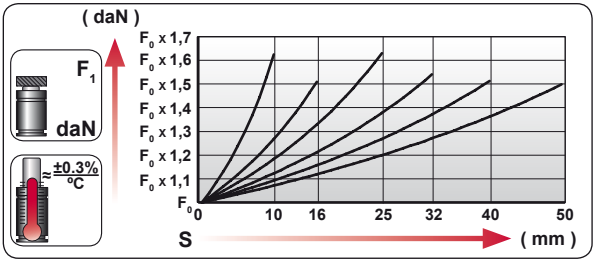


| | |
|---|---|
| ENG | ORDER |
| DEU | BESTELLUNG |
| FRA | COMMANDE |
| ITA | ORDINE |
| ESP | PEDIDO |
| POR | PEDIDO |

F0 daN — S mm

CSE 4700 50

CSE 4700 050 V1

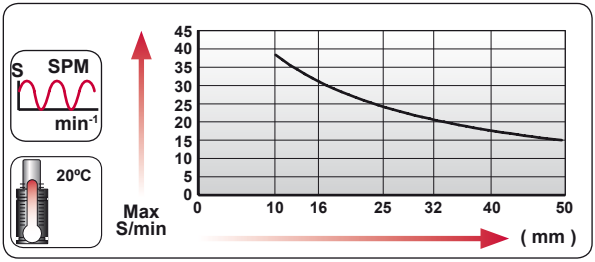


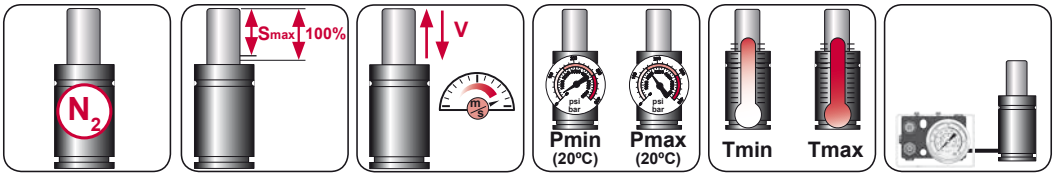


| $N_2$ | Smax < 90% | Vmax 0,5 m/s | bar psi 20 290 | bar psi 150 2175 | ºC ºF 0 32 | ºC ºF 80 176 | 600 CP- |
|---|---|---|---|---|---|---|---|

AZOL GAS

# CSE 4700 V1 MOUNTS

*Power Compact Stroke*

## A49-075

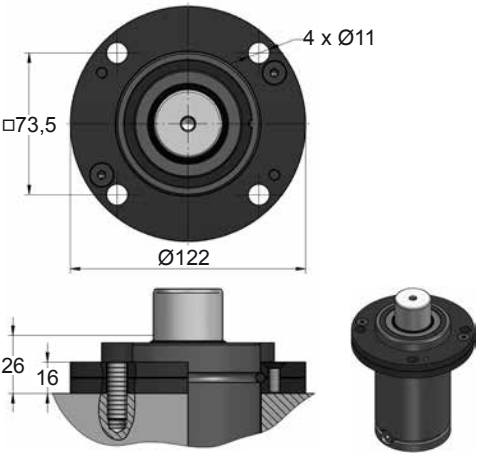


## A59-075

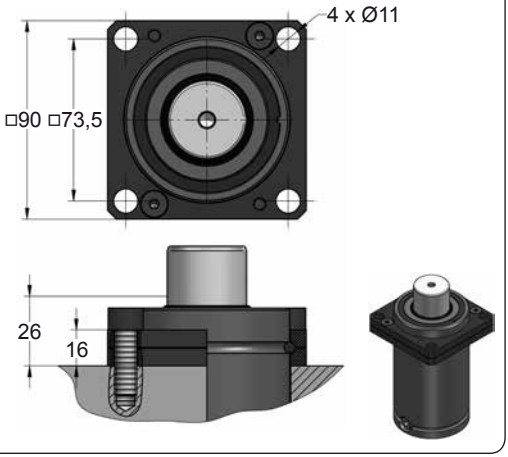


## C20-075

E24.54.815.G
EM24.54.700/F

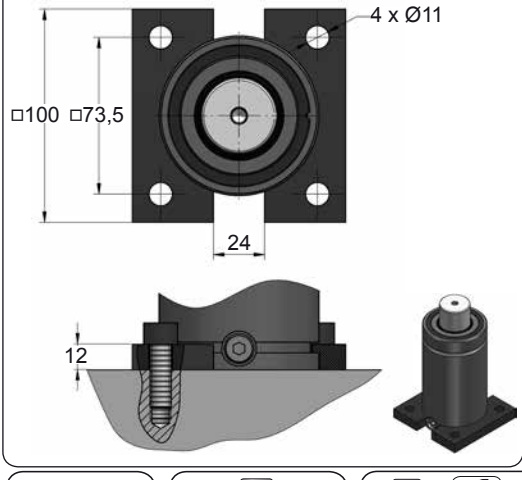


## D02-075

E24.54.815.G
EM24.54.700/F

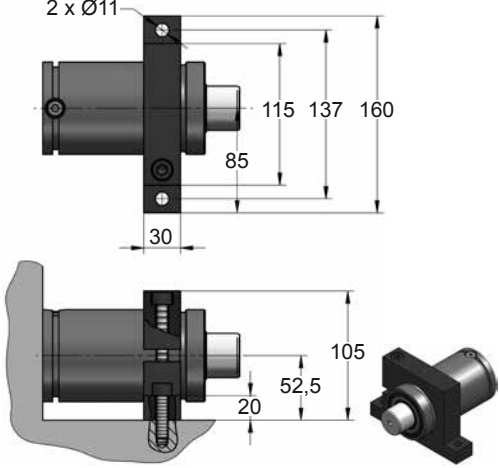









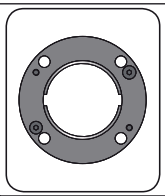

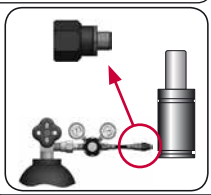

| CODE | | CSE 4700 050 V1 | | A49-075 | 18 GA 5 |
|---|---|---|---|---|---|
| ENG | ORDER | GAS SPRING | REPAIR KIT | FLANGE | CHARGING ADAPTER |
| DEU | BESTELLUNG | GASDRUCKFEDER | ERSATZTEILSATZ | FLANSCHE | LADEADAPTER |
| FRA | COMMANDE | RESSORT À GAZ | KIT DE RÉPARATION | BRIDE | RACCORD DE CHARGE |
| ITA | ORDINE | CILINDRO AD AZOTO | KIT DI MANUTENZIONE | FLANGE | ADATTATORE DI CARICO |
| ESP | PEDIDO | RESORTE DE GAS | KIT DE REPARACION | BRIDA | ADAPTADOR DE CARGA |
| POR | PEDIDO | CILINDRO DE GÁS | KIT DE MANUTENÇÃO | FLANGE | ADAPTADOR DE CARGA |

# CS 7500

*Power Compact Stroke*

AZOL GAS

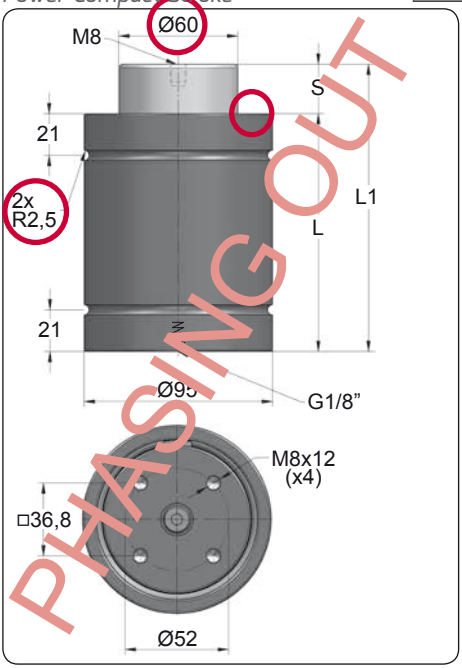


| ORDER | S (mm) | L1 ±0,25 (mm) | L (mm) | Kg. |
|---|---|---|---|---|
| CS 7500 010 | 10 | 90 | 80 | 3.03 |
| CS 7500 016 | 16 | 116 | 100 | 3.48 |
| CS 7500 025 | 25 | 145 | 120 | 3.98 |
| CS 7500 032 | 32 | 182 | 150 | 4.56 |
| CS 7500 040 | 40 | 210 | 170 | 4.91 |
| CS 7500 050 | 50 | 255 | 205 | 5.63 |

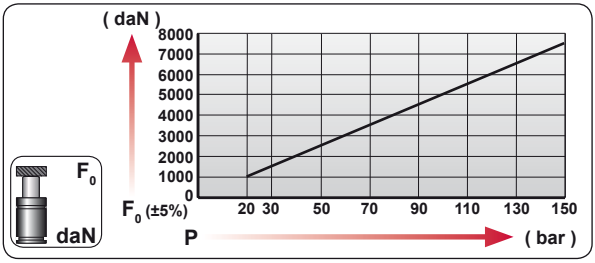


| CODE | bar | psi | F0 daN | F1 daN |
|---|---|---|---|---|
| CS 7500 050 | 150 | 2175 | 7540 | 10765 |
| --------- | --- | --- | --- | --- |

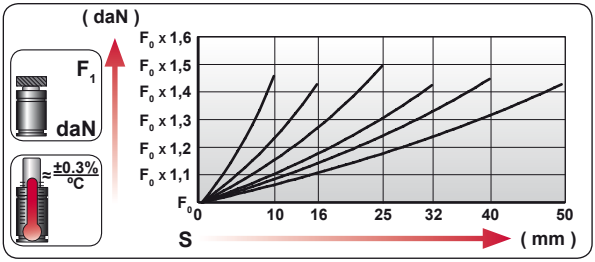


| | ENG | ORDER |
|---|---|---|
| | DEU | BESTELLUNG |
| | FRA | COMMANDE |
| | ITA | ORDINE |
| | ESP | PEDIDO |
| | POR | PEDIDO |

F0 daN — S mm

CS 7500 050

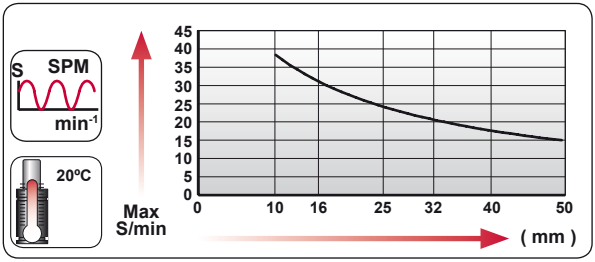


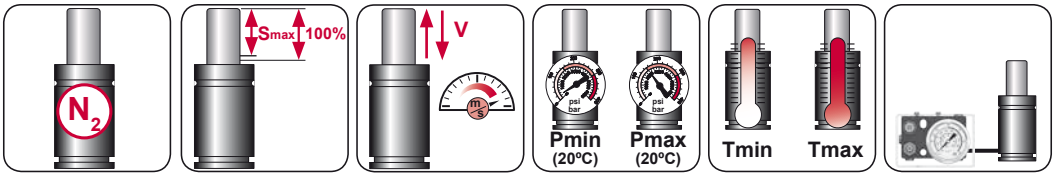


| $N_2$ | Smax < 90% | Vmax 0,5 m/s | bar psi 20 290 | bar psi 150 2175 | ºC ºF 0 32 | ºC ºF 80 176 | |
|---|---|---|---|---|---|---|---|

AZOL GAS

# CS 7500 MOUNTS

*Power Compact Stroke*

## A14-095

E24.54.815.G
EM24.54.700/F

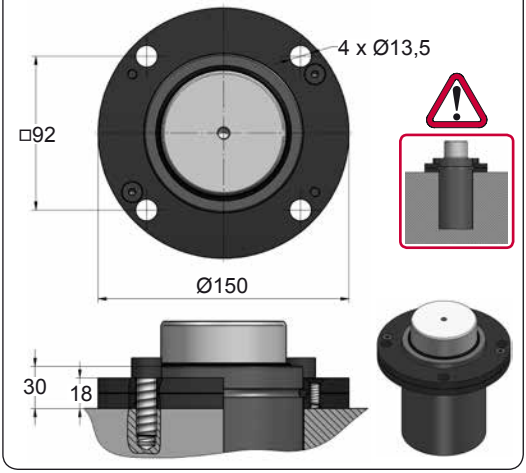


## A19-095

E24.54.815.G

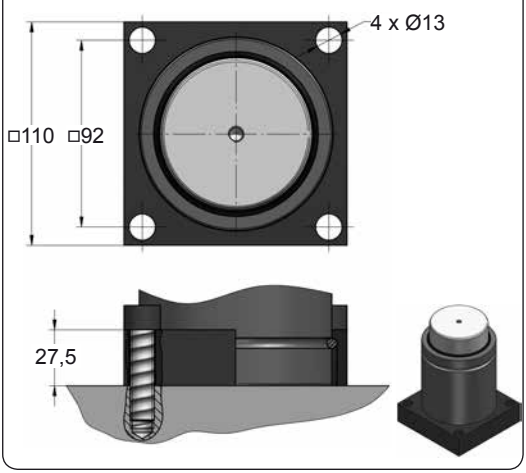


## A34-095

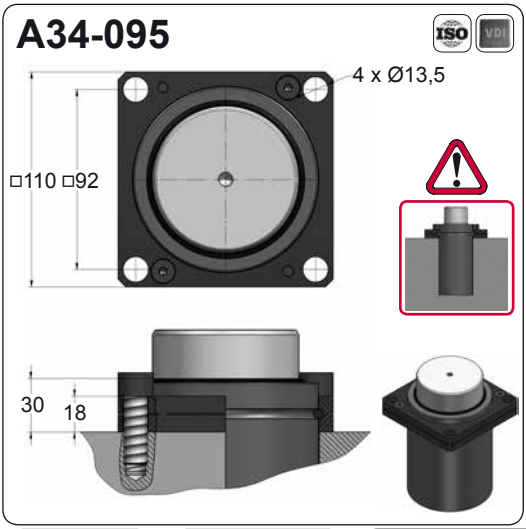


## D02-095

E24.54.815.G
EM24.54.700/F

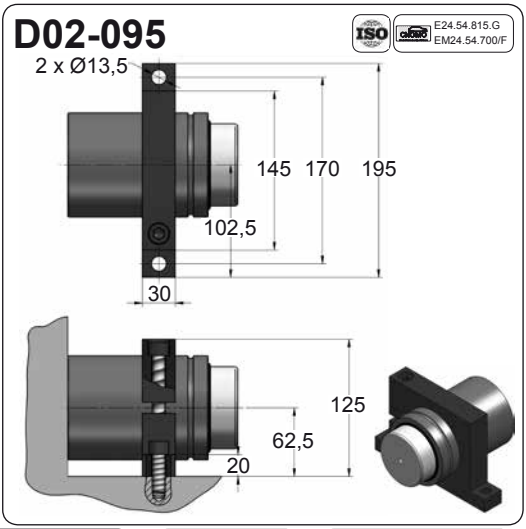









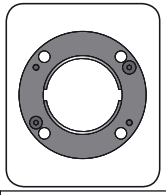

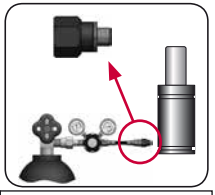

| CODE | | CS 7500 050 | KIT XXXXXXX-S | A14-095 | 18 GA 5 |
|---|---|---|---|---|---|
| ENG | ORDER | GAS SPRING | REPAIR KIT | FLANGE | CHARGING ADAPTER |
| DEU | BESTELLUNG | GASDRUCKFEDER | ERSATZTEILSATZ | FLANSCHE | LADEADAPTER |
| FRA | COMMANDE | RESSORT À GAZ | KIT DE RÉPARATION | BRIDE | RACCORD DE CHARGE |
| ITA | ORDINE | CILINDRO AD AZOTO | KIT DI MANUTENZIONE | FLANGE | ADATTATORE DI CARICO |
| ESP | PEDIDO | RESORTE DE GAS | KIT DE REPARACION | BRIDA | ADAPTADOR DE CARGA |
| POR | PEDIDO | CILINDRO DE GÁS | KIT DE MANUTENÇÃO | FLANGE | ADAPTADOR DE CARGA |

# CS 7500 V1

*Power Compact Stroke*

| BMW B2 4006 | | PSA E24.54.815.G |
|---|---|---|
| | | |
| | | |

AZOL GAS

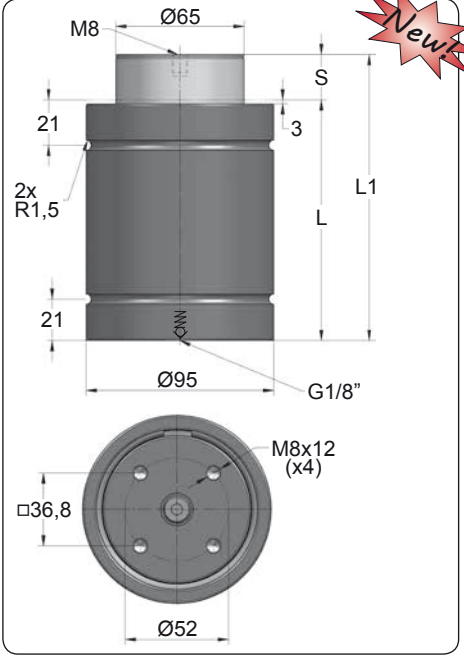


Newt

| ORDER | S (mm) | L1 ±0,25 (mm) | L (mm) | Kg. |
|---|---|---|---|---|
| CS 7500 010 V1 | 10 | 90 | 80 | 3.03 |
| CS 7500 016 V1 | 16 | 116 | 100 | 3.48 |
| CS 7500 025 V1 | 25 | 145 | 120 | 3.98 |
| CS 7500 032 V1 | 32 | 182 | 150 | 4.56 |
| CS 7500 040 V1 | 40 | 210 | 170 | 4.91 |
| CS 7500 050 V1 | 50 | 255 | 205 | 5.63 |
| CS 7500 065 V1 | 65 | 279 | 214 | 6.07 |

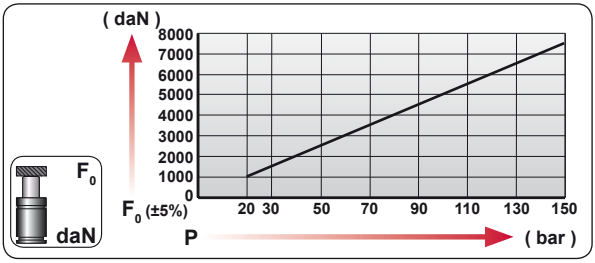


| CODE | bar | psi | $F_0$ daN | $F_1$ daN |
|---|---|---|---|---|
| CS 7500 050 V1 | 150 | 2175 | 7540 | 10765 |
| --------- | --- | --- | --- | --- |

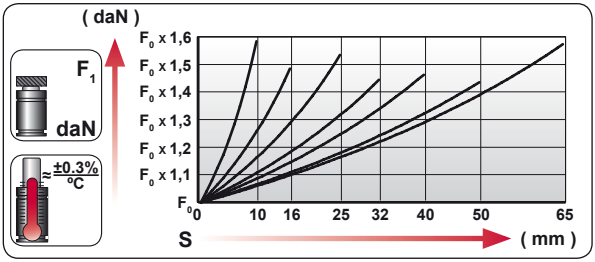


| | |
|---|---|
| ENG | ORDER |
| DEU | BESTELLUNG |
| FRA | COMMANDE |
| ITA | ORDINE |
| ESP | PEDIDO |
| POR | PEDIDO |




CS 7500 50

CS 7500 050 V1

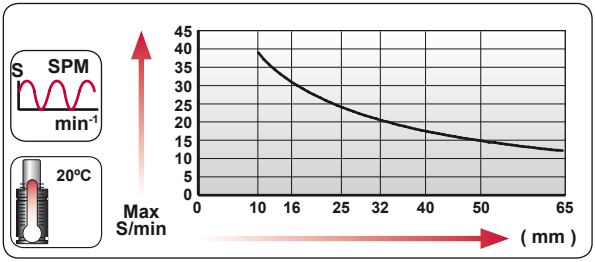


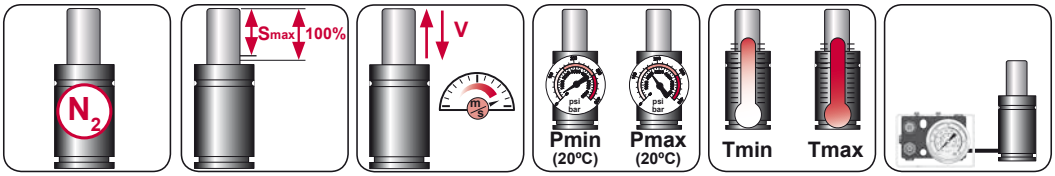


| $N_2$ | Smax < 90% | Vmax 0,5 m/s | bar psi 20 290 | bar psi 150 2175 | ºC ºF 0 32 | ºC ºF 80 176 | |
|---|---|---|---|---|---|---|---|

AZOL GAS

# CS 7500 V1 MOUNTS

*Power Compact Stroke*

## A49-095

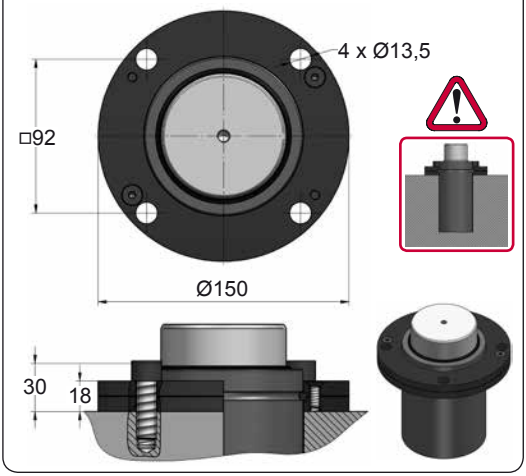


## A54-095

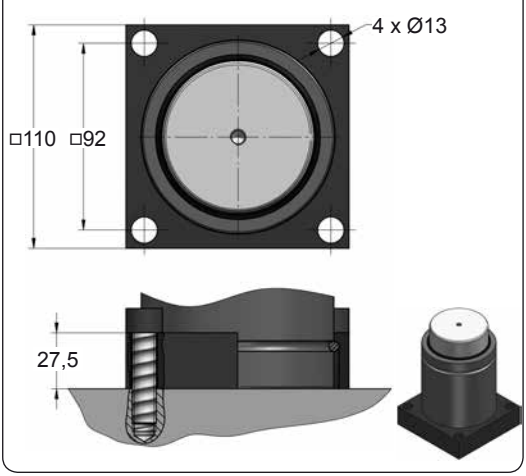


## A59-095

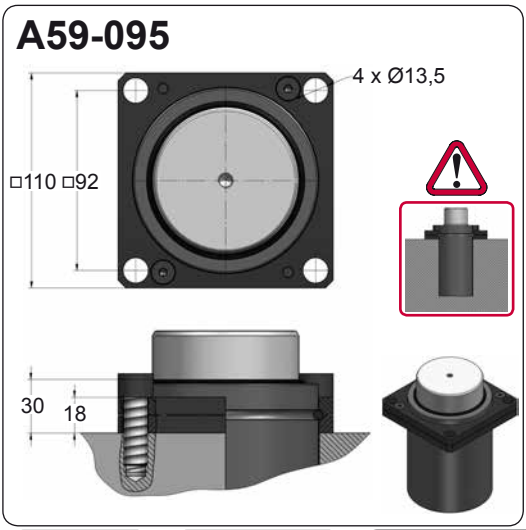


## D02-095

ISO cetop E24.54.815.G EM24.54.700/F

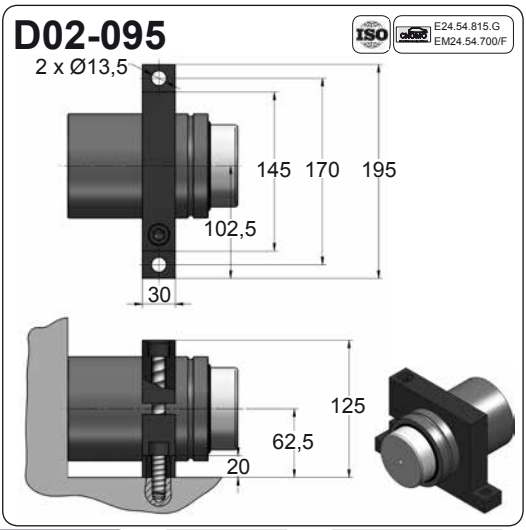









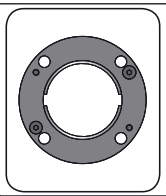

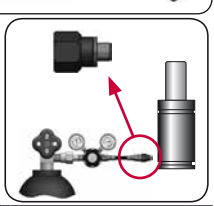

| CODE | | CS 7500 050 V1 | KIT XXXXXXX-S | A49-095 | 18 GA 5 |
|---|---|---|---|---|---|
| ENG | ORDER | GAS SPRING | REPAIR KIT | FLANGE | CHARGING ADAPTER |
| DEU | BESTELLUNG | GASDRUCKFEDER | ERSATZTEILSATZ | FLANSCHE | LADEADAPTER |
| FRA | COMMANDE | RESSORT À GAZ | KIT DE RÉPARATION | BRIDE | RACCORD DE CHARGE |
| ITA | ORDINE | CILINDRO AD AZOTO | KIT DI MANUTENZIONE | FLANGE | ADATTATORE DI CARICO |
| ESP | PEDIDO | RESORTE DE GAS | KIT DE REPARACION | BRIDA | ADAPTADOR DE CARGA |
| POR | PEDIDO | CILINDRO DE GÁS | KIT DE MANUTENÇÃO | FLANGE | ADAPTADOR DE CARGA |

# CSE 7500

*Power Compact Stroke*

AZOL GAS

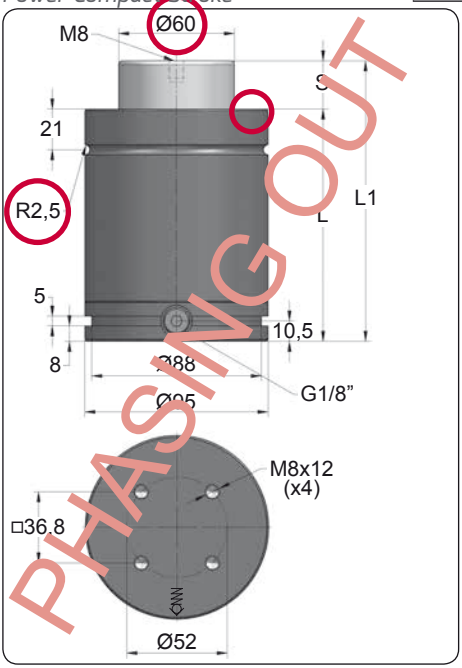


| ORDER | S (mm) | L1 ±0,25 (mm) | L (mm) | Kg. |
|---|---|---|---|---|
| CSE 7500 010 | 10 | 90 | 80 | 3.47 |
| CSE 7500 016 | 16 | 116 | 100 | 3.87 |
| CSE 7500 025 | 25 | 145 | 120 | 4.28 |
| CSE 7500 032 | 32 | 182 | 150 | 4.86 |
| CSE 7500 040 | 40 | 210 | 170 | 5.28 |
| CSE 7500 050 | 50 | 255 | 205 | 5.97 |

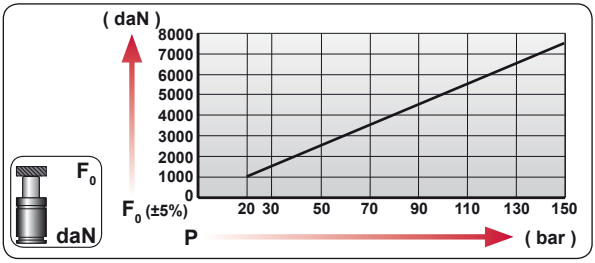


| CODE | bar | psi | $F_0$ daN | $F_1$ daN |
|---|---|---|---|---|
| CSE 7500 050 | 150 | 2175 | 7540 | 11025 |
| CSE-H 7500 050 | 0 | 0 | --- | --- |

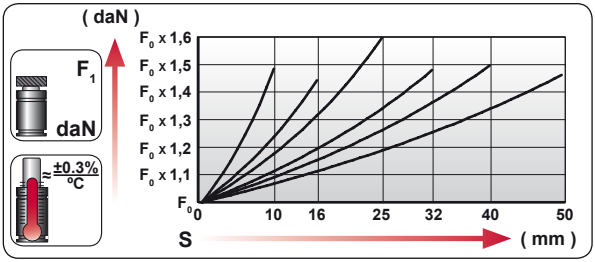


| | |
|---|---|
| ENG | ORDER |
| DEU | BESTELLUNG |
| FRA | COMMANDE |
| ITA | ORDINE |
| ESP | PEDIDO |
| POR | PEDIDO |

$F_0$ daN — S mm

CSE 7500 50

CSE 7500 050

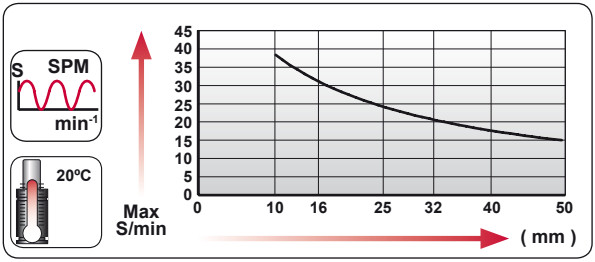


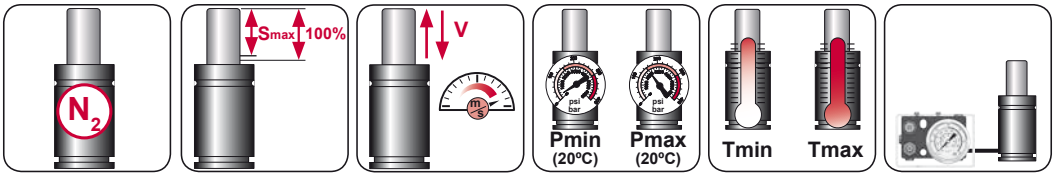


| $N_2$ | Smax < 90% | Vmax 0,5 m/s | bar psi 20 290 | bar psi 150 2175 | ºC ºF 0 32 | ºC ºF 80 176 | 600 CP- |
|---|---|---|---|---|---|---|---|

AZOL GAS

# CSE 7500 MOUNTS

*Power Compact Stroke*

## A14-095

ISO · E24.54.815.G · EM24.54.700/F

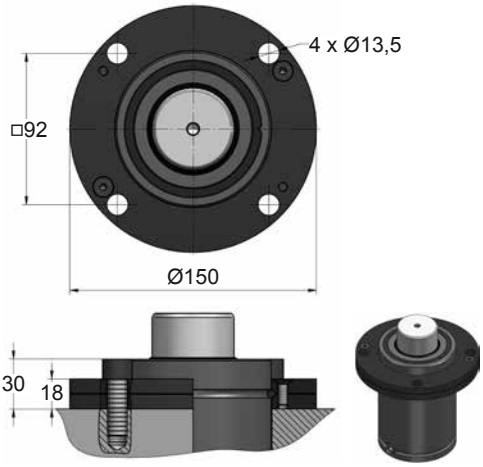


## A34-095

ISO · VDI

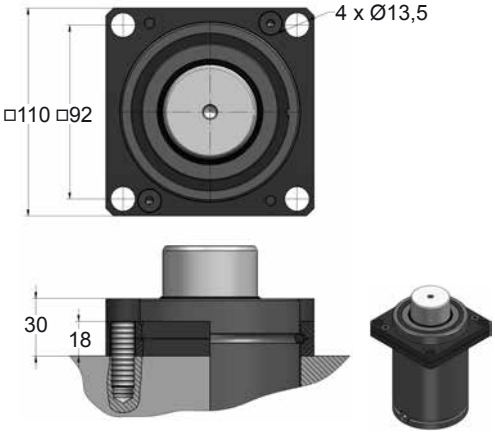


## C20-095

ISO · VDI · E24.54.815.G · EM24.54.700/F

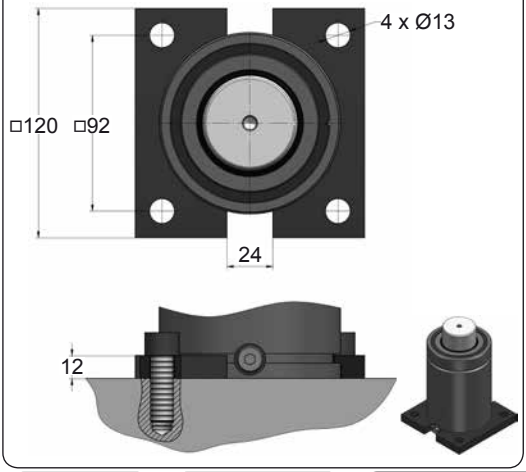


## D02-095

ISO · E24.54.815.G · EM24.54.700/F

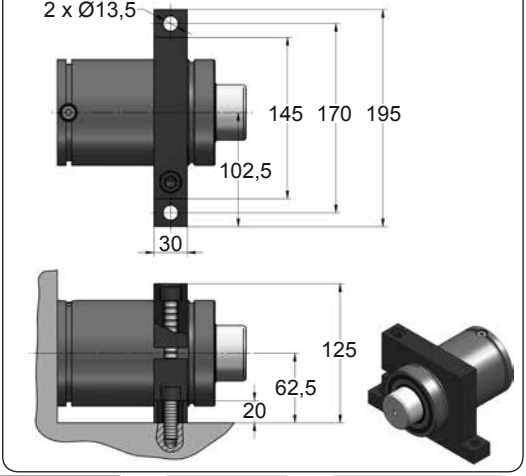









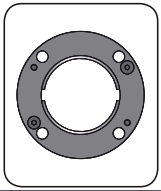

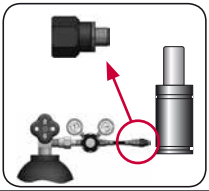

| CODE | | CSE 7500 050 | | A14-095 | 18 GA 5 |
|---|---|---|---|---|---|
| ENG | ORDER | GAS SPRING | REPAIR KIT | FLANGE | CHARGING ADAPTER |
| DEU | BESTELLUNG | GASDRUCKFEDER | ERSATZTEILSATZ | FLANSCHE | LADEADAPTER |
| FRA | COMMANDE | RESSORT À GAZ | KIT DE RÉPARATION | BRIDE | RACCORD DE CHARGE |
| ITA | ORDINE | CILINDRO AD AZOTO | KIT DI MANUTENZIONE | FLANGE | ADATTATORE DI CARICO |
| ESP | PEDIDO | RESORTE DE GAS | KIT DE REPARACION | BRIDA | ADAPTADOR DE CARGA |
| POR | PEDIDO | CILINDRO DE GÁS | KIT DE MANUTENÇÃO | FLANGE | ADAPTADOR DE CARGA |

# CSE 7500 V1

*Power Compact Stroke*

AZOL GAS

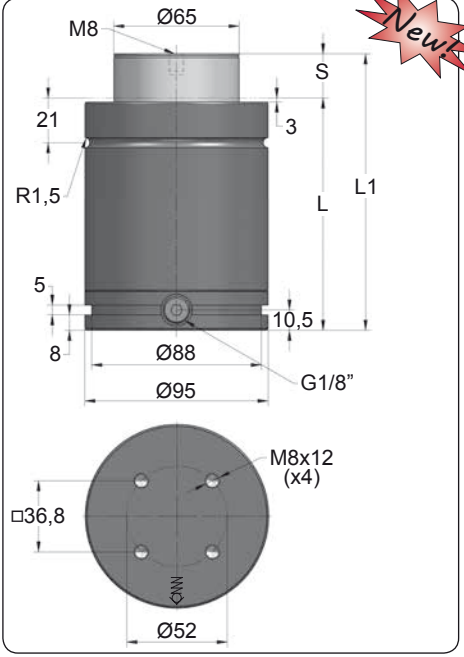


| ORDER | S (mm) | L1 ±0,25 (mm) | L (mm) | Kg. |
|---|---|---|---|---|
| CSE 7500 010 V1 | 10 | 90 | 80 | 3.47 |
| CSE 7500 016 V1 | 16 | 116 | 100 | 3.87 |
| CSE 7500 025 V1 | 25 | 145 | 120 | 4.28 |
| CSE 7500 032 V1 | 32 | 182 | 150 | 4.86 |
| CSE 7500 040 V1 | 40 | 210 | 170 | 5.28 |
| CSE 7500 050 V1 | 50 | 255 | 205 | 5.97 |

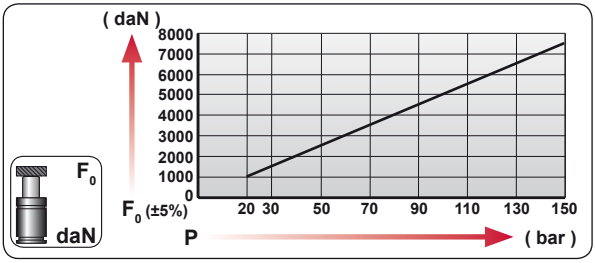


| CODE | bar | psi | $F_0$ daN | $F_1$ daN |
|---|---|---|---|---|
| CSE 7500 050 V1 | 150 | 2175 | 7540 | 11025 |
| CSE-H 7500 050 V1 | 0 | 0 | --- | --- |

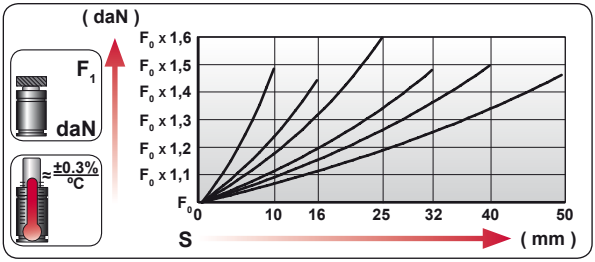


| | |
|---|---|
| ENG | ORDER |
| DEU | BESTELLUNG |
| FRA | COMMANDE |
| ITA | ORDINE |
| ESP | PEDIDO |
| POR | PEDIDO |

$F_0$ daN — S mm

CSE 7500 50

CSE 7500 050 V1

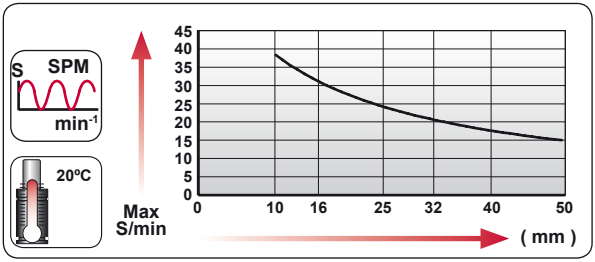


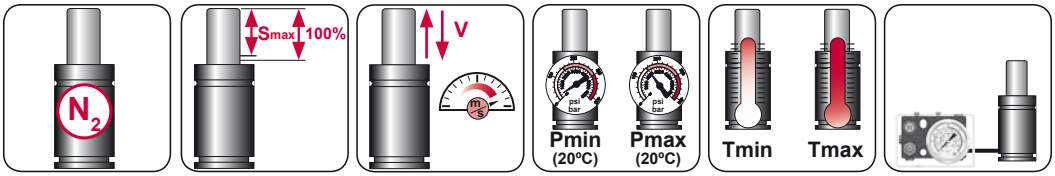


| $N_2$ | Smax < 90% | Vmax 0,5 m/s | bar psi 20 290 | bar psi 150 2175 | ºC ºF 0 32 | ºC ºF 80 176 | 600 CP- |
|---|---|---|---|---|---|---|---|

AZOL GAS

# CSE 7500 V1 MOUNTS

*Power Compact Stroke*

## A49-095

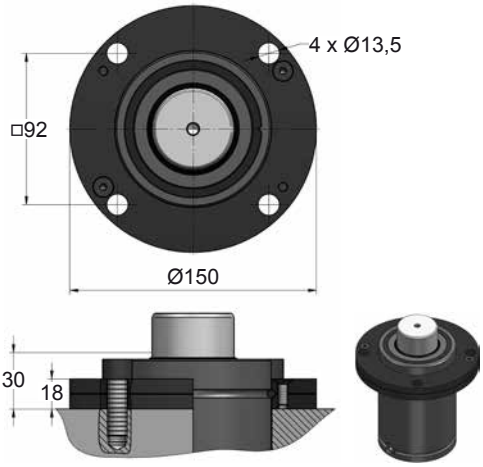


## A59-095

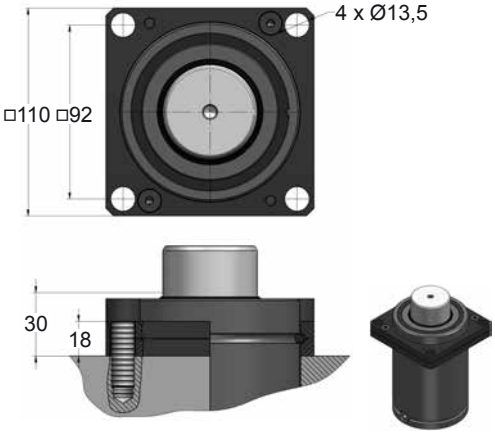


## C20-095

ISO E24.54.815.G EM24.54.700/F

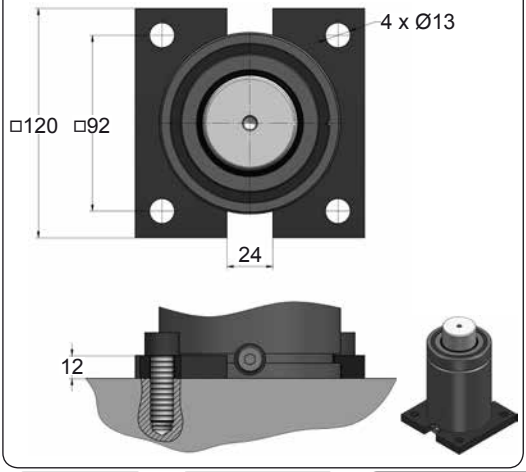


## D02-095

ISO E24.54.815.G EM24.54.700/F

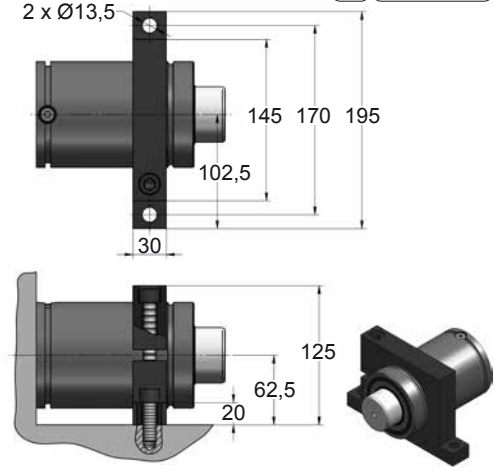









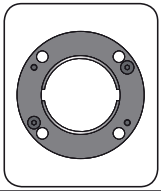

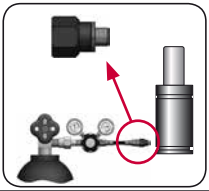

| CODE | | CSE 7500 050 V1 | | A49-095 | 18 GA 5 |
|---|---|---|---|---|---|
| ENG | ORDER | GAS SPRING | REPAIR KIT | FLANGE | CHARGING ADAPTER |
| DEU | BESTELLUNG | GASDRUCKFEDER | ERSATZTEILSATZ | FLANSCHE | LADEADAPTER |
| FRA | COMMANDE | RESSORT À GAZ | KIT DE RÉPARATION | BRIDE | RACCORD DE CHARGE |
| ITA | ORDINE | CILINDRO AD AZOTO | KIT DI MANUTENZIONE | FLANGE | ADATTATORE DI CARICO |
| ESP | PEDIDO | RESORTE DE GAS | KIT DE REPARACION | BRIDA | ADAPTADOR DE CARGA |
| POR | PEDIDO | CILINDRO DE GÁS | KIT DE MANUTENÇÃO | FLANGE | ADAPTADOR DE CARGA |

# CS 11800

*Power Compact Stroke*

AZOL GAS

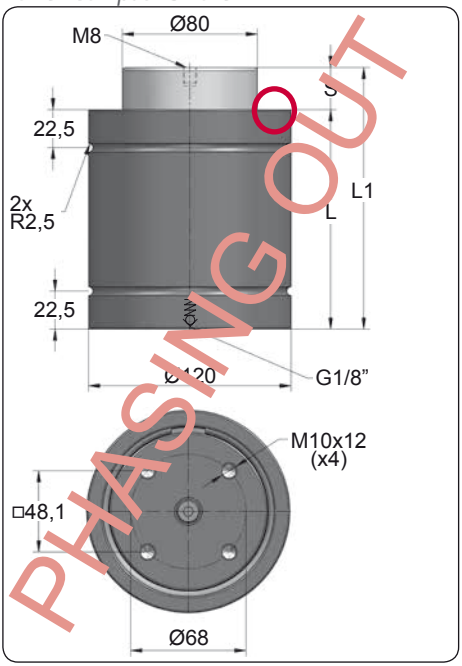


| ORDER | S (mm) | L1 ±0,25 (mm) | L (mm) | Kg. |
|---|---|---|---|---|
| CS 11800 010 | 10 | 100 | 90 | 5.85 |
| CS 11800 016 | 16 | 126 | 110 | 6.57 |
| CS 11800 025 | 25 | 155 | 130 | 7.38 |
| CS 11800 032 | 32 | 187 | 155 | 8.24 |
| CS 11800 040 | 40 | 220 | 180 | 9.12 |
| CS 11800 050 | 50 | 260 | 210 | 10.14 |

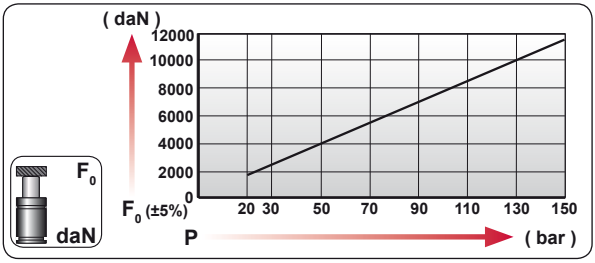


| CODE | bar | psi | $F_0$ daN | $F_1$ daN |
|---|---|---|---|---|
| CS 11800 050 | 150 | 2175 | 11780 | 17145 |
| --------- | --- | --- | --- | --- |

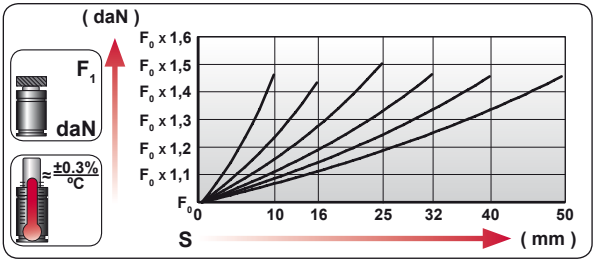


| | ENG | ORDER |
|---|---|---|
| | DEU | BESTELLUNG |
| | FRA | COMMANDE |
| | ITA | ORDINE |
| | ESP | PEDIDO |
| | POR | PEDIDO |

$F_0$ daN — S mm

CS 11800 50

CS 11800 050

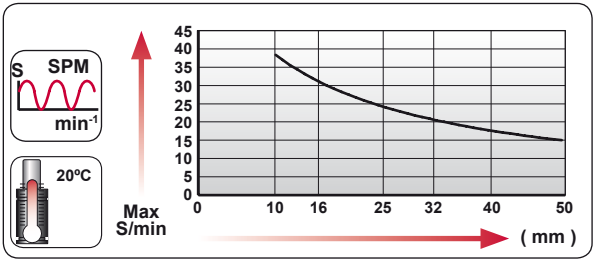


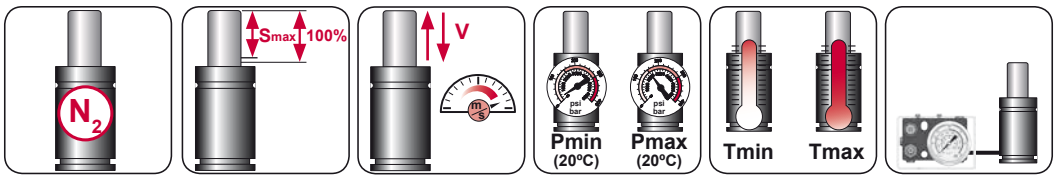


| $N_2$ | Smax < 90% | Vmax 0,5 m/s | bar psi 20 290 | bar psi 150 2175 | ºC ºF 0 32 | ºC ºF 80 176 |
|---|---|---|---|---|---|---|

AZOL GAS

# CS 11800 MOUNTS

*Power Compact Stroke*

## A14-120

ISO E24.54.815.G EM24.54.700/F

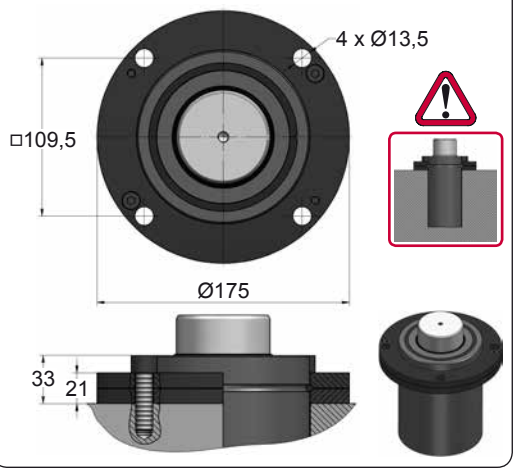


## A34-120

ISO VDI

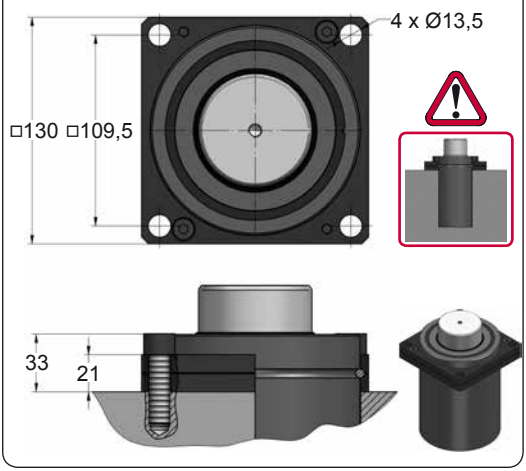


## D02-120

ISO E24.54.815.G EM24.54.700/F

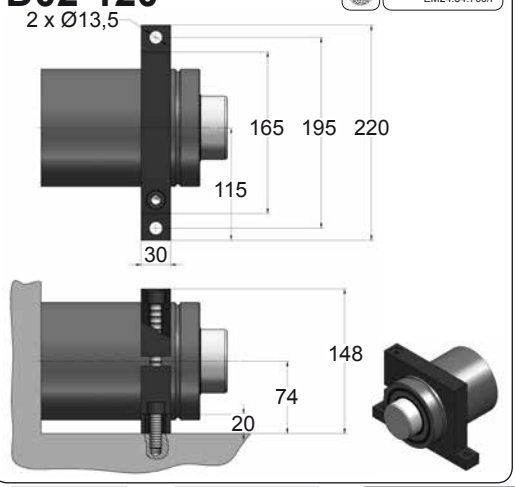





| CODE | | CS 11800 050 | KIT XXXXXXX-S | A14-120 | 18 GA 5 |
|---|---|---|---|---|---|
| ENG | ORDER | GAS SPRING | REPAIR KIT | FLANGE | CHARGING ADAPTER |
| DEU | BESTELLUNG | GASDRUCKFEDER | ERSATZTEILSATZ | FLANSCHE | LADEADAPTER |
| FRA | COMMANDE | RESSORT À GAZ | KIT DE RÉPARATION | BRIDE | RACCORD DE CHARGE |
| ITA | ORDINE | CILINDRO AD AZOTO | KIT DI MANUTENZIONE | FLANGE | ADATTATORE DI CARICO |
| ESP | PEDIDO | RESORTE DE GAS | KIT DE REPARACION | BRIDA | ADAPTADOR DE CARGA |
| POR | PEDIDO | CILINDRO DE GÁS | KIT DE MANUTENÇÃO | FLANGE | ADAPTADOR DE CARGA |

# CS 11800 V1

*Power Compact Stroke*

| BMW B2 4006 | | |
|---|---|---|
| | | |
| | | |

AZOL GAS

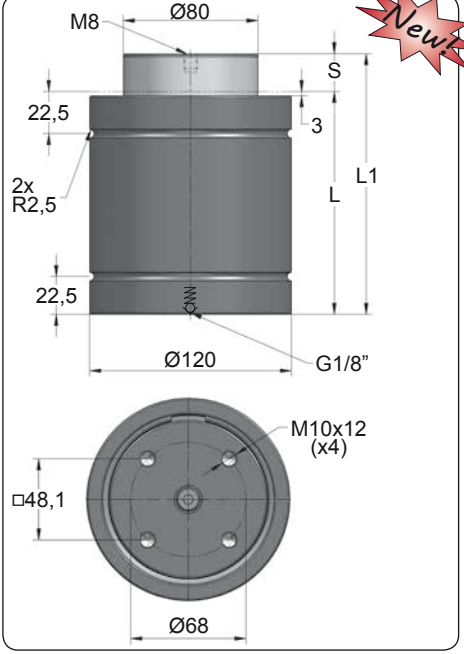


Newt

| ORDER | S (mm) | L1 ±0,25 (mm) | L (mm) | Kg. |
|---|---|---|---|---|
| CS 11800 010 V1 | 10 | 100 | 90 | 5.85 |
| CS 11800 016 V1 | 16 | 126 | 110 | 6.57 |
| CS 11800 025 V1 | 25 | 155 | 130 | 7.38 |
| CS 11800 032 V1 | 32 | 187 | 155 | 8.24 |
| CS 11800 040 V1 | 40 | 220 | 180 | 9.12 |
| CS 11800 050 V1 | 50 | 260 | 210 | 10.14 |
| CS 11800 065 V1 | 65 | 320 | 255 | 11.32 |

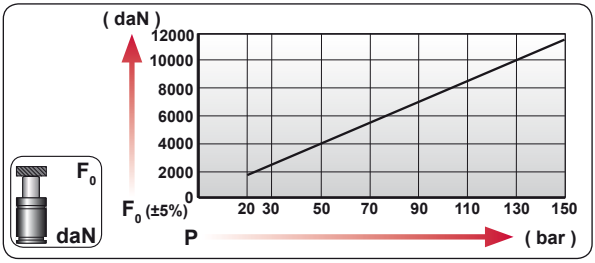


| CODE | | bar | psi | F0 daN | F1 daN |
|---|---|---|---|---|---|
| CS 11800 050 V1 | | 150 | 2175 | 11780 | 17145 |
| --------- | | --- | --- | --- | --- |

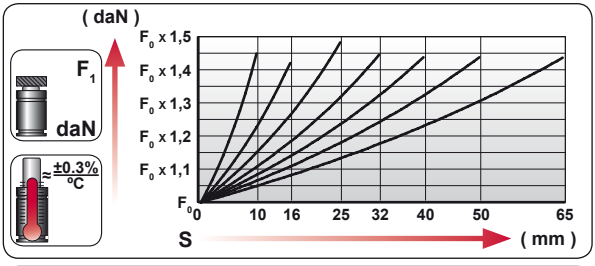


| ENG | ORDER |
|---|---|
| DEU | BESTELLUNG |
| FRA | COMMANDE |
| ITA | ORDINE |
| ESP | PEDIDO |
| POR | PEDIDO |

F0 daN — S mm

CS 11800 50

CS 11800 050 V1

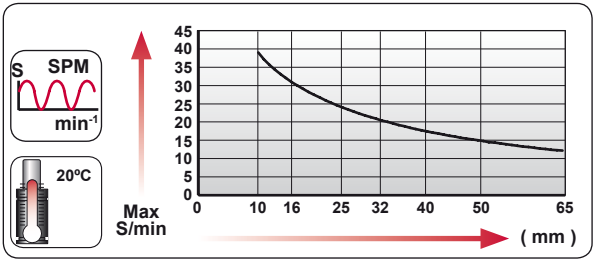


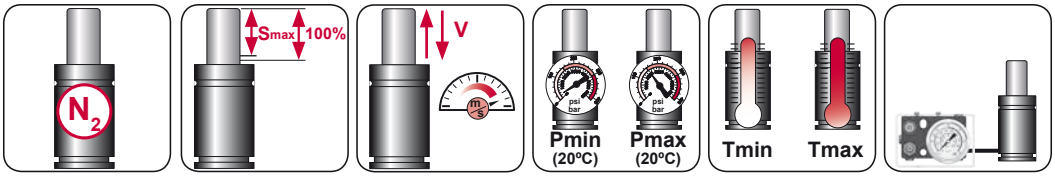


| $N_2$ | Smax < 90% | Vmax 0,5 m/s | bar psi 20 290 | bar psi 150 2175 | ºC ºF 0 32 | ºC ºF 80 176 | |
|---|---|---|---|---|---|---|---|

AZOL GAS

# CS 11800 V1 MOUNTS

*Power Compact Stroke*

## A14-120

ISO · E24.54.815.G · EM24.54.700/F

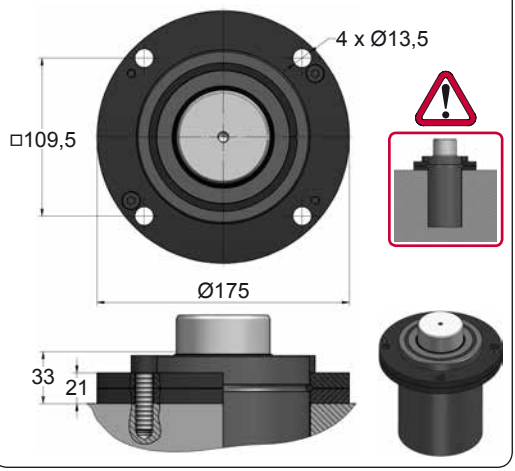


## A34-120

ISO · VDI

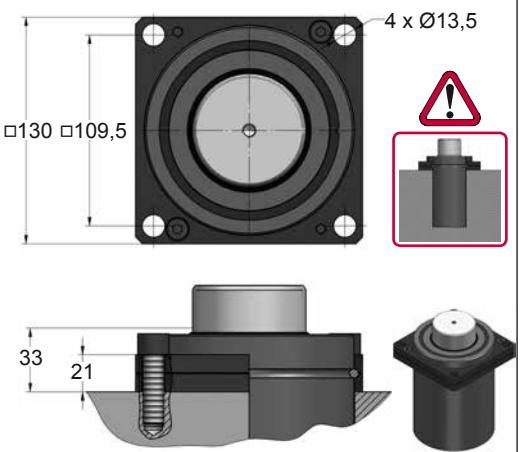


## D02-120

ISO · E24.54.815.G · EM24.54.700/F

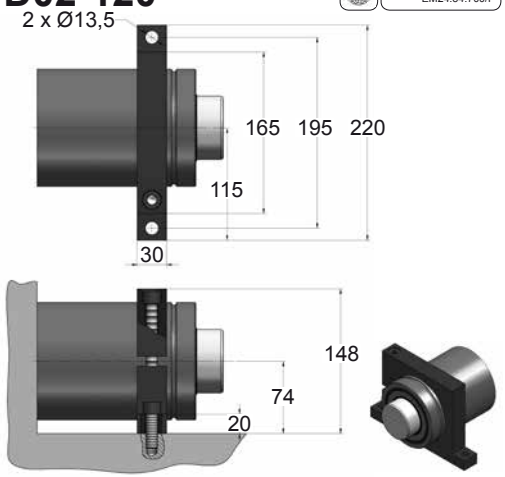




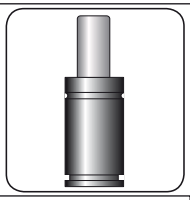




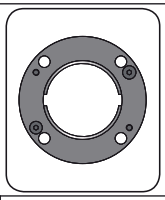

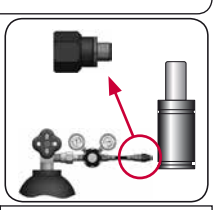

| CODE | | CS 11800 050 V1 | KIT XXXXXXX-S | A14-120 | 18 GA 5 |
|---|---|---|---|---|---|
| ENG | ORDER | GAS SPRING | REPAIR KIT | FLANGE | CHARGING ADAPTER |
| DEU | BESTELLUNG | GASDRUCKFEDER | ERSATZTEILSATZ | FLANSCHE | LADEADAPTER |
| FRA | COMMANDE | RESSORT À GAZ | KIT DE RÉPARATION | BRIDE | RACCORD DE CHARGE |
| ITA | ORDINE | CILINDRO AD AZOTO | KIT DI MANUTENZIONE | FLANGE | ADATTATORE DI CARICO |
| ESP | PEDIDO | RESORTE DE GAS | KIT DE REPARACION | BRIDA | ADAPTADOR DE CARGA |
| POR | PEDIDO | CILINDRO DE GÁS | KIT DE MANUTENÇÃO | FLANGE | ADAPTADOR DE CARGA |

# CSE 11800

*Power Compact Stroke*

AZOL GAS

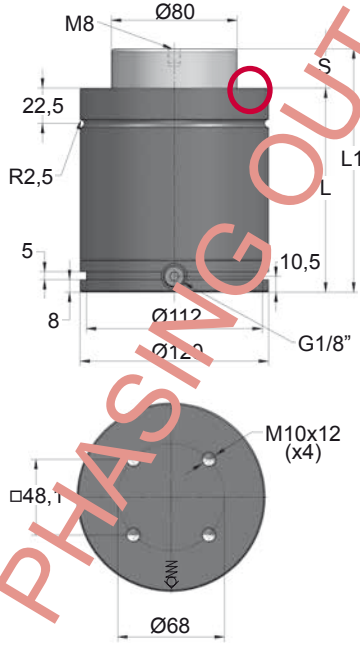


PHASING OUT

| ORDER | S (mm) | L1 ±0,25 (mm) | L (mm) | Kg. |
|---|---|---|---|---|
| CSE 11800 010 | 10 | 100 | 90 | 6.24 |
| CSE 11800 016 | 16 | 126 | 110 | 6.92 |
| CSE 11800 025 | 25 | 155 | 130 | 7.71 |
| CSE 11800 032 | 32 | 187 | 155 | 8.57 |
| CSE 11800 040 | 40 | 220 | 180 | 9.47 |
| CSE 11800 050 | 50 | 260 | 210 | 10.55 |

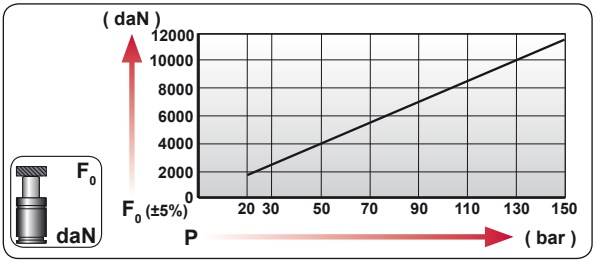


| CODE | bar | psi | F0 daN | F1 daN |
|---|---|---|---|---|
| CSE 11800 050 | 150 | 2175 | 11780 | 17310 |
| CSE-H 11800 050 | 0 | 0 | --- | --- |

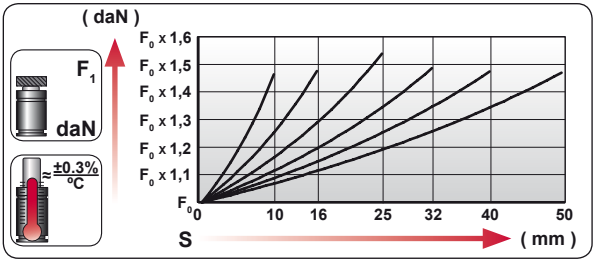


| | |
|---|---|
| ENG | ORDER |
| DEU | BESTELLUNG |
| FRA | COMMANDE |
| ITA | ORDINE |
| ESP | PEDIDO |
| POR | PEDIDO |

F0 daN — S mm

CSE 11800 50

CSE 11800 050

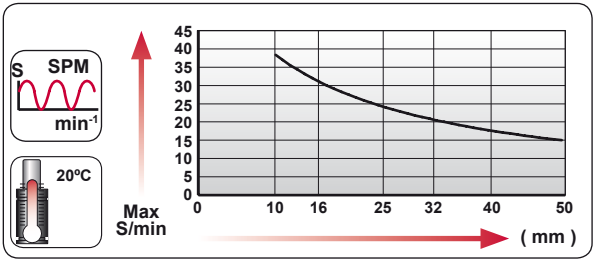


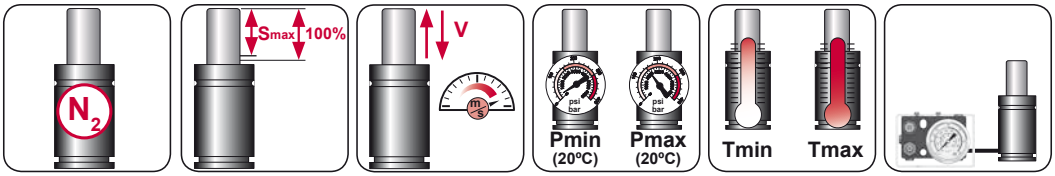


| $N_2$ | Smax < 90% | Vmax 0,5 m/s | bar psi 20 290 | bar psi 150 2175 | ºC ºF 0 32 | ºC ºF 80 176 | 600 CP- |
|---|---|---|---|---|---|---|---|

AZOL GAS

# CSE 11800 MOUNTS

*Power Compact Stroke*

## A14-120

ISO · E24.54.815.G · EM24.54.700/F

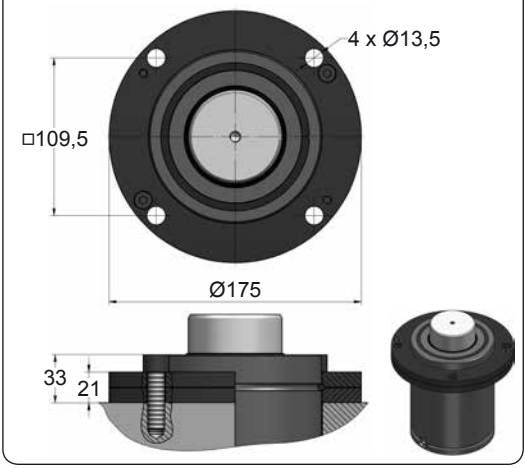


## A34-120

ISO · VDI

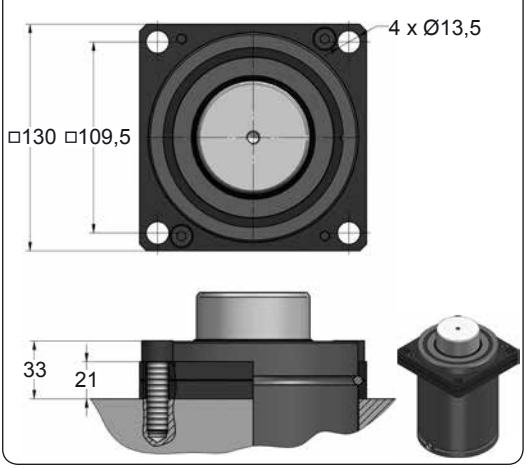


## C20-120

ISO · VDI · E24.54.815.G · EM24.54.700/F




## D02-120

ISO · E24.54.815.G · EM24.54.700/F

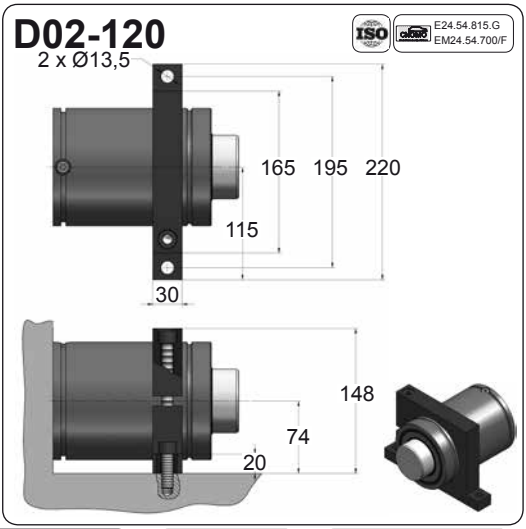









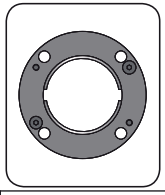

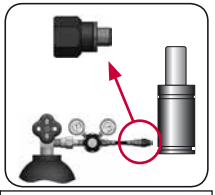

| CODE | | CSE 11800 050 | | A14-120 | 18 GA 5 |
|---|---|---|---|---|---|
| ENG | ORDER | GAS SPRING | REPAIR KIT | FLANGE | CHARGING ADAPTER |
| DEU | BESTELLUNG | GASDRUCKFEDER | ERSATZTEILSATZ | FLANSCHE | LADEADAPTER |
| FRA | COMMANDE | RESSORT À GAZ | KIT DE RÉPARATION | BRIDE | RACCORD DE CHARGE |
| ITA | ORDINE | CILINDRO AD AZOTO | KIT DI MANUTENZIONE | FLANGE | ADATTATORE DI CARICO |
| ESP | PEDIDO | RESORTE DE GAS | KIT DE REPARACION | BRIDA | ADAPTADOR DE CARGA |
| POR | PEDIDO | CILINDRO DE GÁS | KIT DE MANUTENÇÃO | FLANGE | ADAPTADOR DE CARGA |

# CSE 11800 V1

*Power Compact Stroke*

AZOL GAS

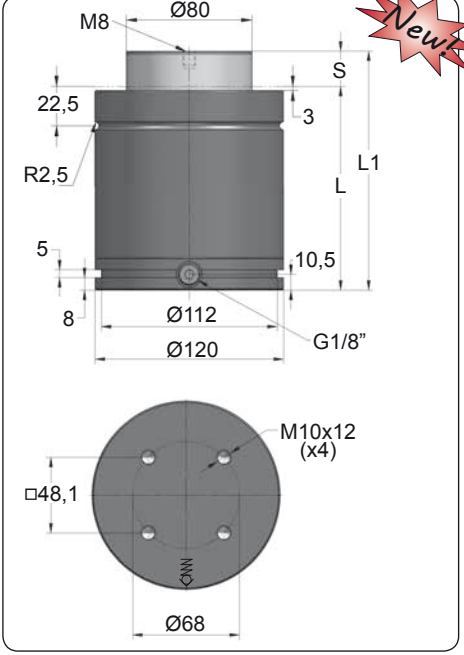


Newt

| ORDER | S (mm) | L1 ±0,25 (mm) | L (mm) | Kg. |
|---|---|---|---|---|
| CSE 11800 010 V1 | 10 | 100 | 90 | 6.24 |
| CSE 11800 016 V1 | 16 | 126 | 110 | 6.92 |
| CSE 11800 025 V1 | 25 | 155 | 130 | 7.71 |
| CSE 11800 032 V1 | 32 | 187 | 155 | 8.57 |
| CSE 11800 040 V1 | 40 | 220 | 180 | 9.47 |
| CSE 11800 050 V1 | 50 | 260 | 210 | 10.55 |

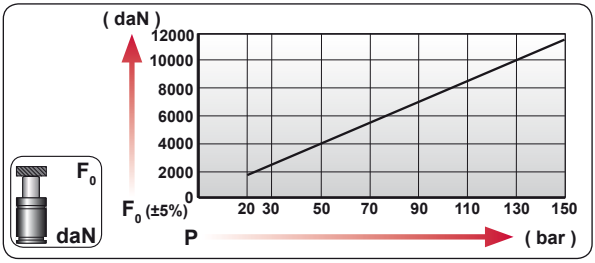


| CODE | bar | psi | $F_0$ daN | $F_1$ daN |
|---|---|---|---|---|
| CSE 11800 050 V1 | 150 | 2175 | 11780 | 17310 |
| CSE-H 11800 050 V1 | 0 | 0 | --- | --- |

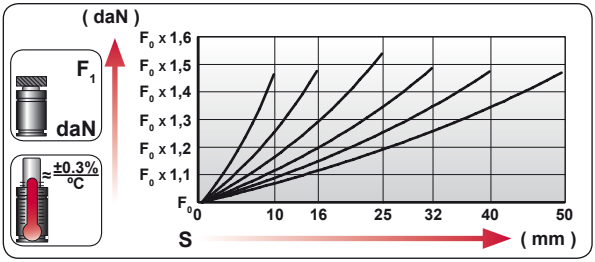


| | |
|---|---|
| ENG | ORDER |
| DEU | BESTELLUNG |
| FRA | COMMANDE |
| ITA | ORDINE |
| ESP | PEDIDO |
| POR | PEDIDO |

$F_0$ daN — S mm

CSE 11800 50

CSE 11800 050 V1

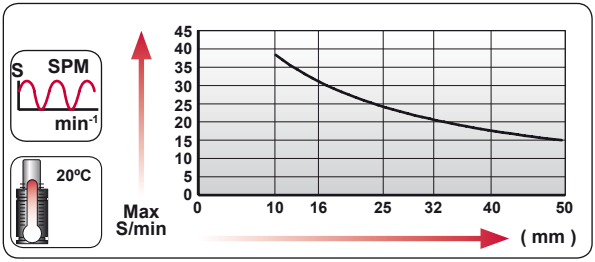


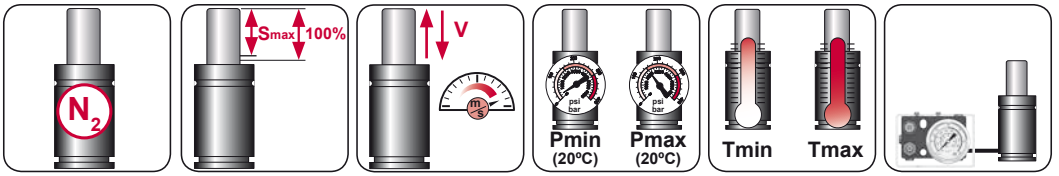


| $N_2$ | Smax < 90% | Vmax 0,5 m/s | bar psi 20 290 | bar psi 150 2175 | ºC ºF 0 32 | ºC ºF 80 176 | 600 CP- |
|---|---|---|---|---|---|---|---|

AZOL GAS

# CSE 11800 V1 MOUNTS

*Power Compact Stroke*

## A14-120

E24.54.815.G
EM24.54.700/F

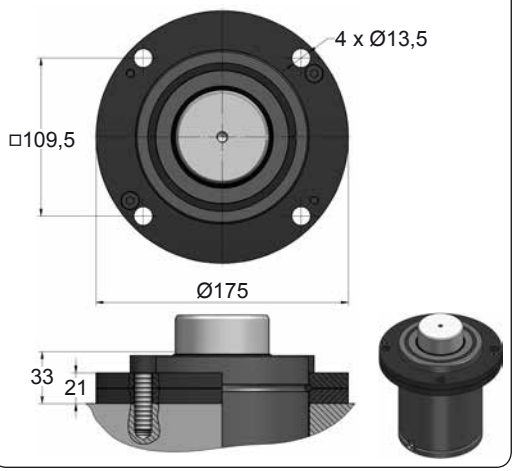


## A34-120

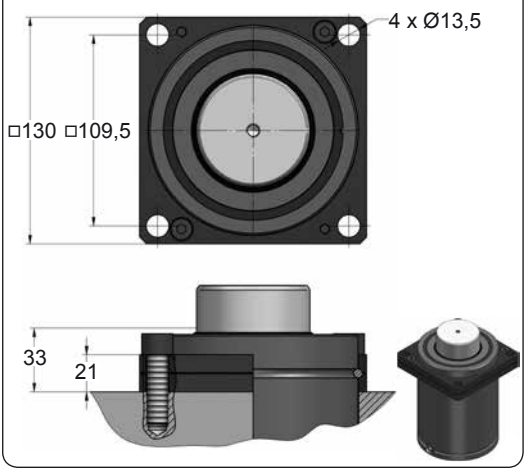


## C20-120

E24.54.815.G
EM24.54.700/F

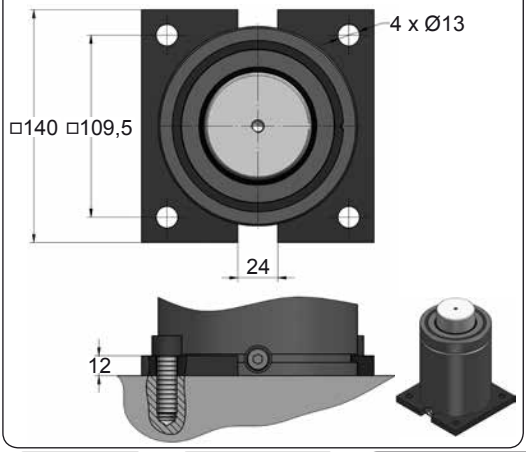


## D02-120

E24.54.815.G
EM24.54.700/F

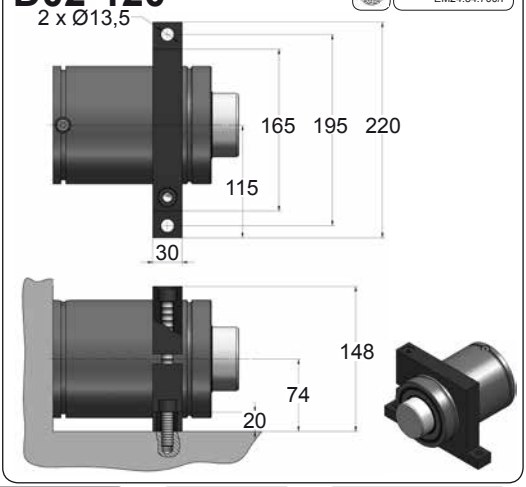









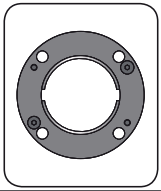

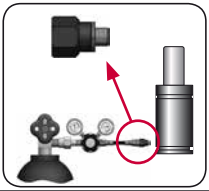

| CODE | | CSE 11800 050 V1 | | A14-120 | 18 GA 5 |
|---|---|---|---|---|---|
| ENG | ORDER | GAS SPRING | REPAIR KIT | FLANGE | CHARGING ADAPTER |
| DEU | BESTELLUNG | GASDRUCKFEDER | ERSATZTEILSATZ | FLANSCHE | LADEADAPTER |
| FRA | COMMANDE | RESSORT À GAZ | KIT DE RÉPARATION | BRIDE | RACCORD DE CHARGE |
| ITA | ORDINE | CILINDRO AD AZOTO | KIT DI MANUTENZIONE | FLANGE | ADATTATORE DI CARICO |
| ESP | PEDIDO | RESORTE DE GAS | KIT DE REPARACION | BRIDA | ADAPTADOR DE CARGA |
| POR | PEDIDO | CILINDRO DE GÁS | KIT DE MANUTENÇÃO | FLANGE | ADAPTADOR DE CARGA |

# CS 18300

*Power Compact Stroke*

AZOL GAS

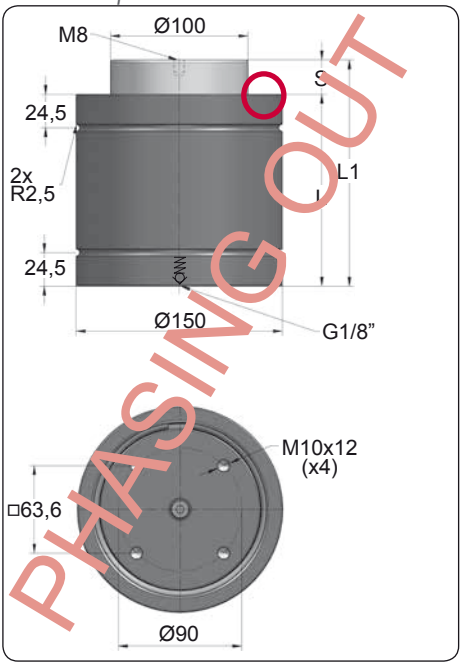


| ORDER | S (mm) | L1 ±0,25 (mm) | L (mm) | Kg. |
|---|---|---|---|---|
| CS 18300 010 | 10 | 110 | 100 | 9.80 |
| CS 18300 016 | 16 | 136 | 120 | 11.07 |
| CS 18300 025 | 25 | 165 | 140 | 12.20 |
| CS 18300 032 | 32 | 197 | 165 | 13.60 |
| CS 18300 040 | 40 | 235 | 195 | 15.20 |
| CS 18300 050 | 50 | 270 | 220 | 16.60 |

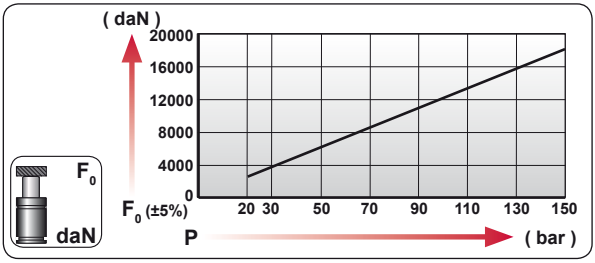


| CODE | bar | psi | $F_0$ daN | $F_1$ daN |
|---|---|---|---|---|
| CS 18300 050 | 150 | 2175 | 18410 | 26340 |
| --------- | --- | --- | --- | --- |

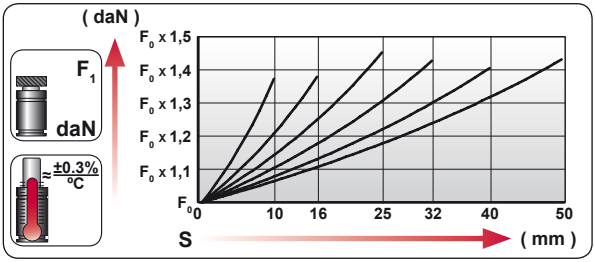


| | |
|---|---|
| ENG | ORDER |
| DEU | BESTELLUNG |
| FRA | COMMANDE |
| ITA | ORDINE |
| ESP | PEDIDO |
| POR | PEDIDO |

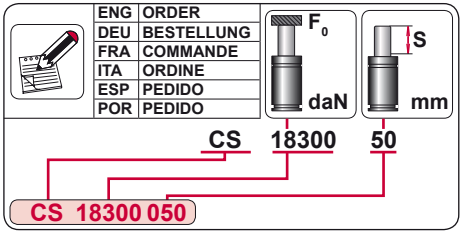


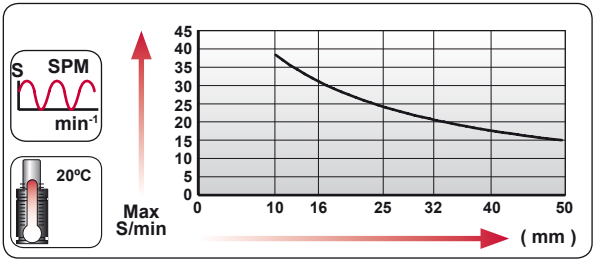


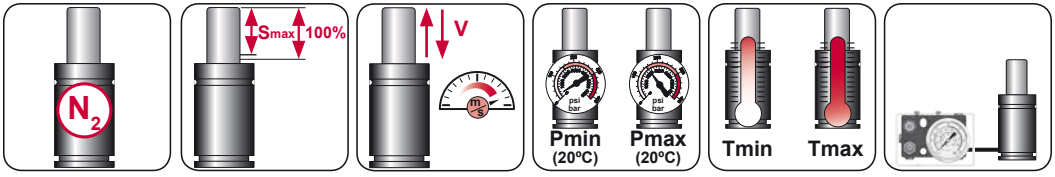


| $N_2$ | Smax < 90% | Vmax 0,5 m/s | bar psi 20 290 | bar psi 150 2175 | ºC ºF 0 32 | ºC ºF 80 176 | |
|---|---|---|---|---|---|---|---|

AZOL GAS

# CS 18300 MOUNTS

*Power Compact Stroke*

## A14-150

ISO · E24.54.815.G · EM24.54.700/F

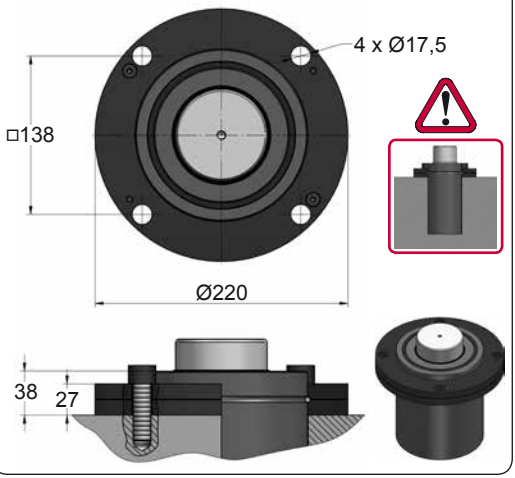


## A34-150

ISO · VDI

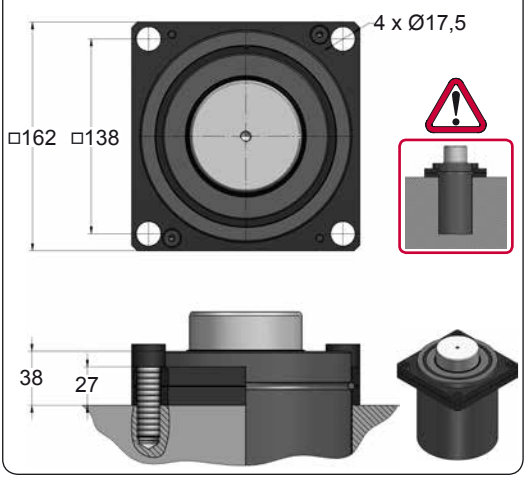


## D02-150

ISO · E24.54.815.G

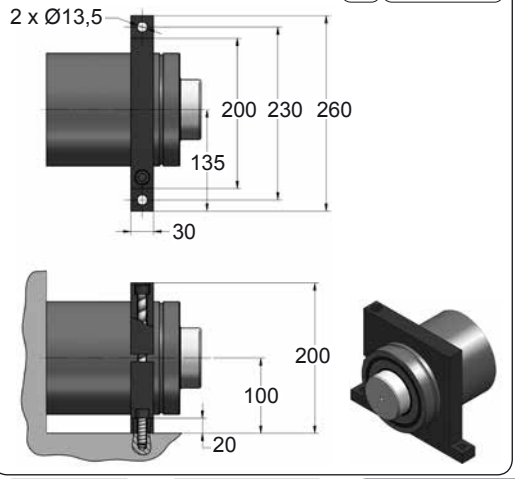









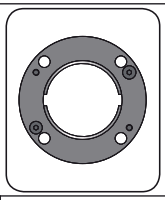

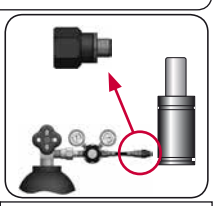

| CODE | | CS 18300 050 | KIT XXXXXXX-S | A14-150 | 18 GA 5 |
|---|---|---|---|---|---|
| ENG | ORDER | GAS SPRING | REPAIR KIT | FLANGE | CHARGING ADAPTER |
| DEU | BESTELLUNG | GASDRUCKFEDER | ERSATZTEILSATZ | FLANSCHE | LADEADAPTER |
| FRA | COMMANDE | RESSORT À GAZ | KIT DE RÉPARATION | BRIDE | RACCORD DE CHARGE |
| ITA | ORDINE | CILINDRO AD AZOTO | KIT DI MANUTENZIONE | FLANGE | ADATTATORE DI CARICO |
| ESP | PEDIDO | RESORTE DE GAS | KIT DE REPARACION | BRIDA | ADAPTADOR DE CARGA |
| POR | PEDIDO | CILINDRO DE GÁS | KIT DE MANUTENÇÃO | FLANGE | ADAPTADOR DE CARGA |

# CS 18300 V1

*Power Compact Stroke*

AZOL GAS

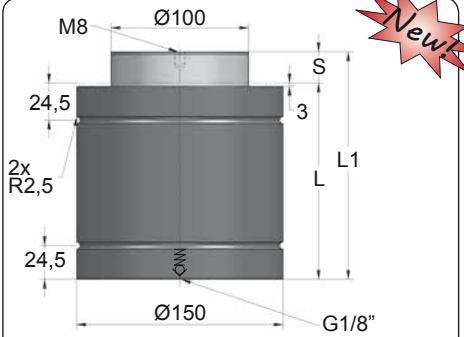


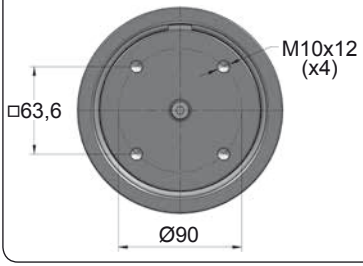


Newt

| ORDER | S (mm) | L1 ±0,25 (mm) | L (mm) | Kg. |
|---|---|---|---|---|
| CS 18300 010 V1 | 10 | 110 | 100 | 9.80 |
| CS 18300 016 V1 | 16 | 136 | 120 | 11.07 |
| CS 18300 025 V1 | 25 | 165 | 140 | 12.20 |
| CS 18300 032 V1 | 32 | 197 | 165 | 13.60 |
| CS 18300 040 V1 | 40 | 235 | 195 | 15.20 |
| CS 18300 050 V1 | 50 | 270 | 220 | 16.60 |
| CS 18300 065 V1 | 65 | 323 | 258 | 18.01 |

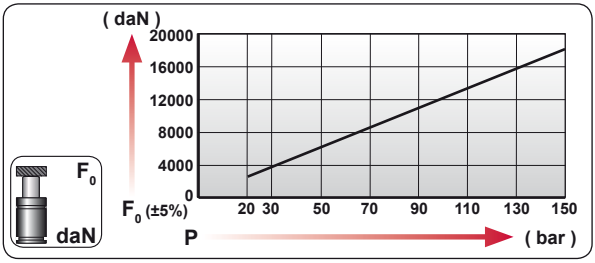


| CODE | bar | psi | $F_0$ daN | $F_1$ daN |
|---|---|---|---|---|
| CS 18300 050 V1 | 150 | 2175 | 18410 | 26340 |
| --------- | --- | --- | --- | --- |

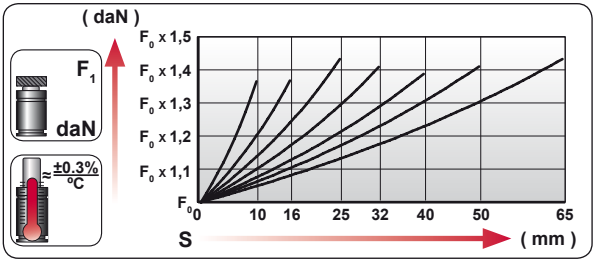


| | ENG | ORDER |
|---|---|---|
| | DEU | BESTELLUNG |
| | FRA | COMMANDE |
| | ITA | ORDINE |
| | ESP | PEDIDO |
| | POR | PEDIDO |

$F_0$ daN — S mm

CS 18300 50

CS 18300 050 V1

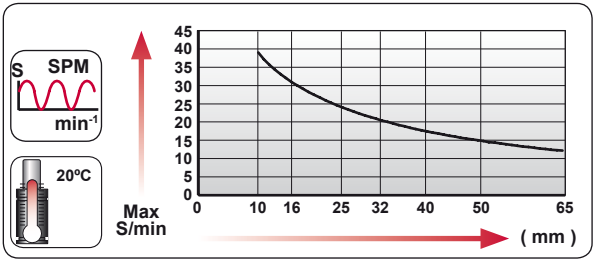


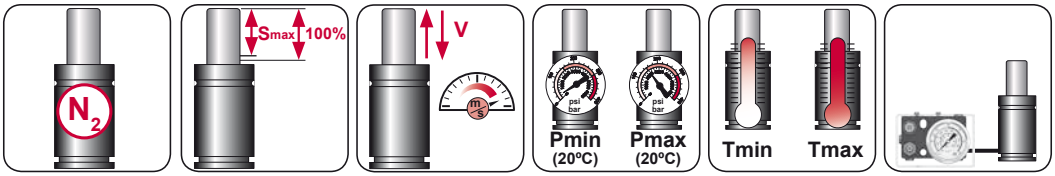


| $N_2$ | Smax < 90% | Vmax 0,5 m/s | bar psi 20 290 | bar psi 150 2175 | ºC ºF 0 32 | ºC ºF 80 176 | |
|---|---|---|---|---|---|---|---|

AZOL GAS

# CS 18300 V1 MOUNTS

*Power Compact Stroke*

## A14-150

ISO · E24.54.815.G · EM24.54.700/F

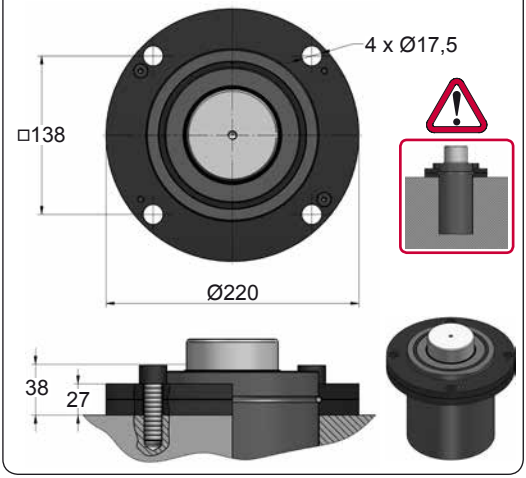


## A34-150

ISO · VDI

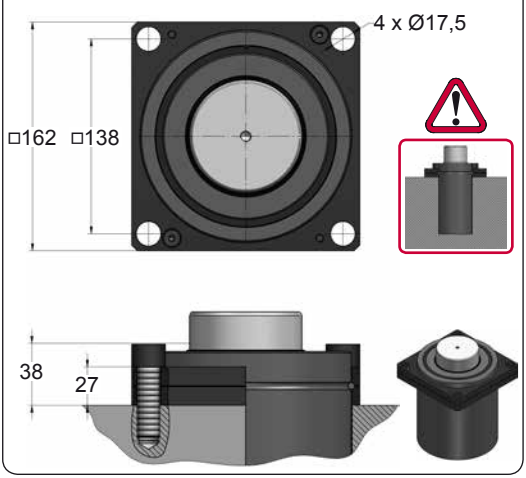


## D02-150

ISO · E24.54.815.G

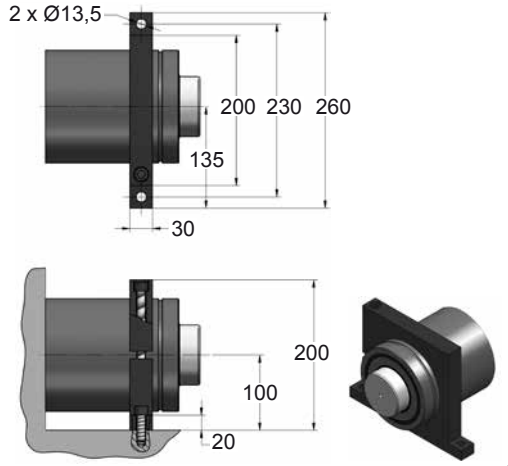




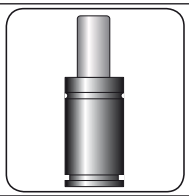




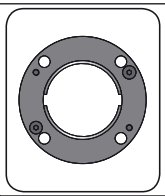

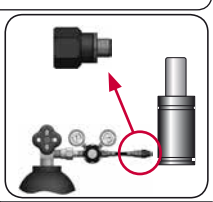

| CODE | | CS 18300 050 V1 | KIT XXXXXXX-S | A14-150 | 18 GA 5 |
|---|---|---|---|---|---|
| ENG | ORDER | GAS SPRING | REPAIR KIT | FLANGE | CHARGING ADAPTER |
| DEU | BESTELLUNG | GASDRUCKFEDER | ERSATZTEILSATZ | FLANSCHE | LADEADAPTER |
| FRA | COMMANDE | RESSORT À GAZ | KIT DE RÉPARATION | BRIDE | RACCORD DE CHARGE |
| ITA | ORDINE | CILINDRO AD AZOTO | KIT DI MANUTENZIONE | FLANGE | ADATTATORE DI CARICO |
| ESP | PEDIDO | RESORTE DE GAS | KIT DE REPARACION | BRIDA | ADAPTADOR DE CARGA |
| POR | PEDIDO | CILINDRO DE GÁS | KIT DE MANUTENÇÃO | FLANGE | ADAPTADOR DE CARGA |

# CSE 18300

*Power Compact Stroke*

AZOL GAS

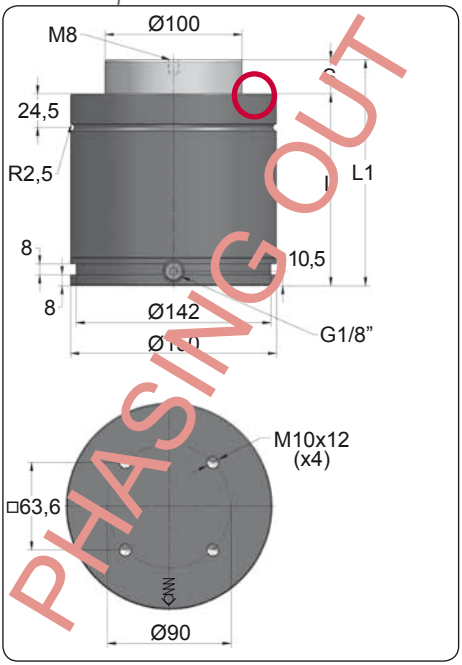


PHASING OUT

| ORDER | S (mm) | L1 ±0,25 (mm) | L (mm) | Kg. |
|---|---|---|---|---|
| CSE 18300 010 | 10 | 110 | 100 | 15.44 |
| CSE 18300 016 | 16 | 136 | 120 | 16.53 |
| CSE 18300 025 | 25 | 165 | 140 | 17.73 |
| CSE 18300 032 | 32 | 197 | 165 | 19.07 |
| CSE 18300 040 | 40 | 235 | 195 | 20.65 |
| CSE 18300 050 | 50 | 270 | 220 | 22.11 |

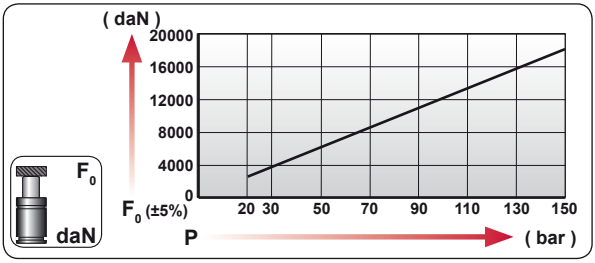


| CODE | bar | psi | F0 daN | F1 daN |
|---|---|---|---|---|
| CSE 18300 050 | 150 | 2175 | 18410 | 26515 |
| CSE-H 18300 050 | 0 | 0 | --- | --- |

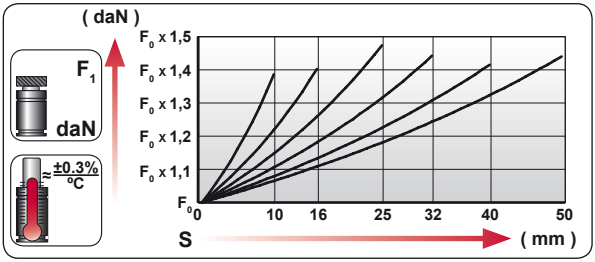


| | |
|---|---|
| ENG | ORDER |
| DEU | BESTELLUNG |
| FRA | COMMANDE |
| ITA | ORDINE |
| ESP | PEDIDO |
| POR | PEDIDO |

F0 daN — S mm

CSE 18300 50

CSE 18300 050

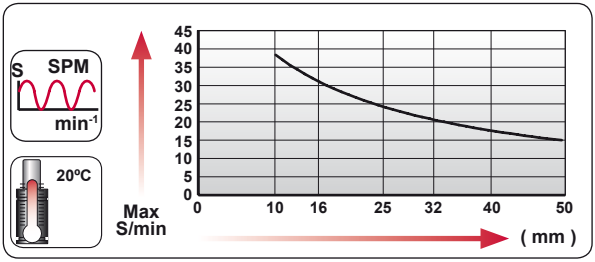


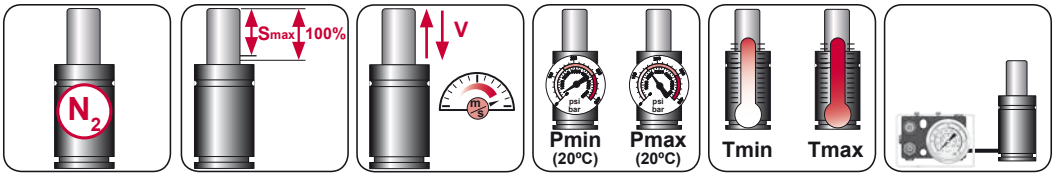


| $N_2$ | Smax < 90% | Vmax 0,5 m/s | bar psi 20 290 | bar psi 150 2175 | ºC ºF 0 32 | ºC ºF 80 176 | 600 CP- |
|---|---|---|---|---|---|---|---|

AZOL GAS

# CSE 18300 MOUNTS

*Power Compact Stroke*

## A14-150

E24.54.815.G
EM24.54.700/F

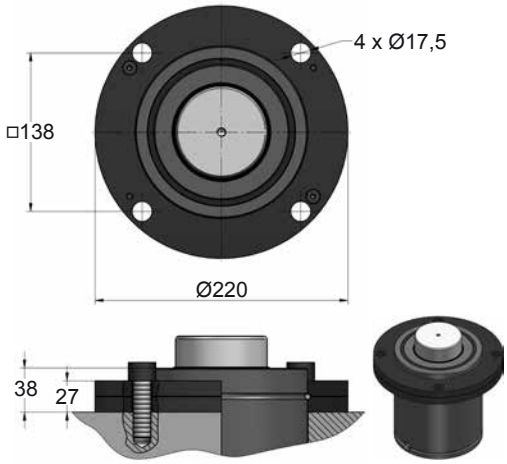


## A34-150

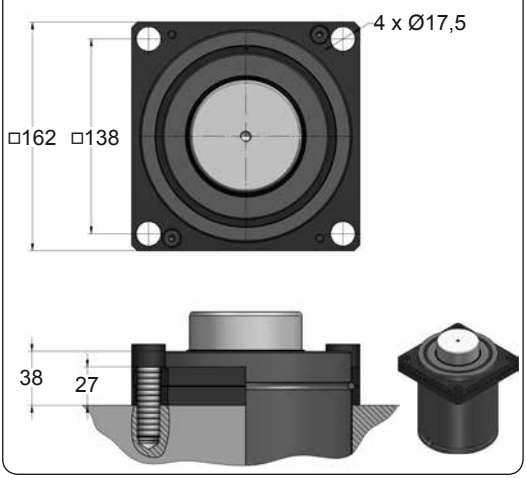


## C20-150

E24.54.815.G
EM24.54.700/F

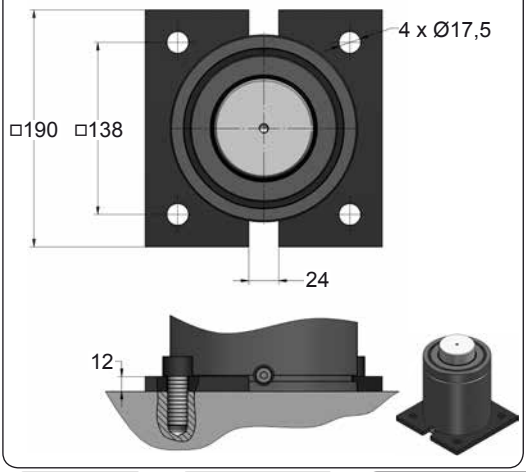


## D02-150

E24.54.815.G

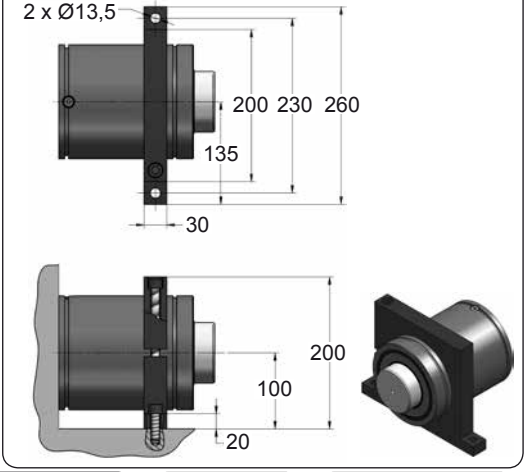









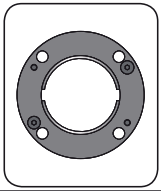

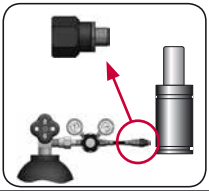

| CODE | | CSE 18300 050 | | A14-150 | 18 GA 5 |
|---|---|---|---|---|---|
| ENG | ORDER | GAS SPRING | REPAIR KIT | FLANGE | CHARGING ADAPTER |
| DEU | BESTELLUNG | GASDRUCKFEDER | ERSATZTEILSATZ | FLANSCHE | LADEADAPTER |
| FRA | COMMANDE | RESSORT À GAZ | KIT DE RÉPARATION | BRIDE | RACCORD DE CHARGE |
| ITA | ORDINE | CILINDRO AD AZOTO | KIT DI MANUTENZIONE | FLANGE | ADATTATORE DI CARICO |
| ESP | PEDIDO | RESORTE DE GAS | KIT DE REPARACION | BRIDA | ADAPTADOR DE CARGA |
| POR | PEDIDO | CILINDRO DE GÁS | KIT DE MANUTENÇÃO | FLANGE | ADAPTADOR DE CARGA |

# CSE 18300 V1

*Power Compact Stroke*

AZOL GAS

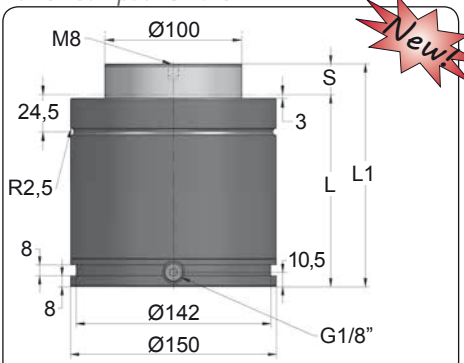


Newt

| ORDER | S (mm) | L1 ±0,25 (mm) | L (mm) | Kg. |
|---|---|---|---|---|
| CSE 18300 010 V1 | 10 | 110 | 100 | 15.44 |
| CSE 18300 016 V1 | 16 | 136 | 120 | 16.53 |
| CSE 18300 025 V1 | 25 | 165 | 140 | 17.73 |
| CSE 18300 032 V1 | 32 | 197 | 165 | 19.07 |
| CSE 18300 040 V1 | 40 | 235 | 195 | 20.65 |
| CSE 18300 050 V1 | 50 | 270 | 220 | 22.11 |

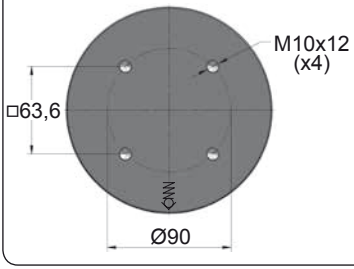


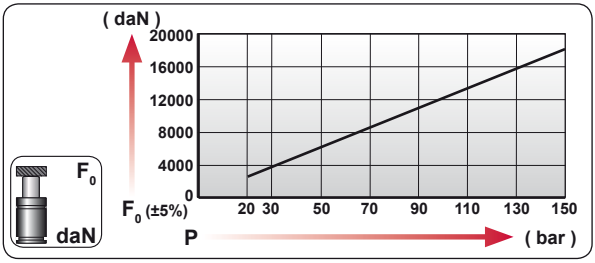


| CODE | bar | psi | $F_0$ daN | $F_1$ daN |
|---|---|---|---|---|
| CSE 18300 050 V1 | 150 | 2175 | 18410 | 26515 |
| CSE-H 18300 050 V1 | 0 | 0 | --- | --- |

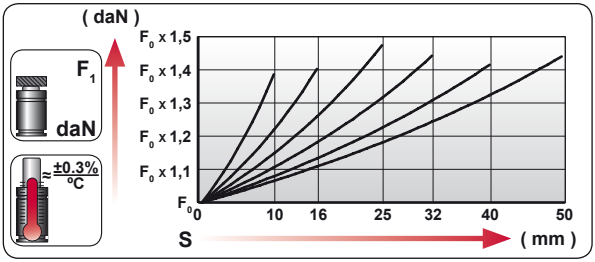


| | |
|---|---|
| ENG | ORDER |
| DEU | BESTELLUNG |
| FRA | COMMANDE |
| ITA | ORDINE |
| ESP | PEDIDO |
| POR | PEDIDO |

$F_0$ daN — S mm

CSE 18300 50

CSE 18300 050 V1

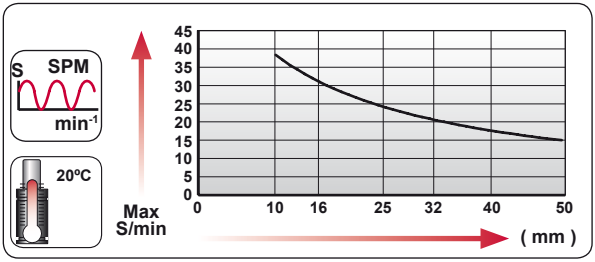


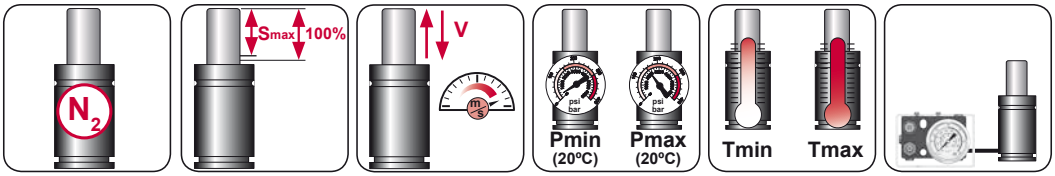


| $N_2$ | Smax < 90% | Vmax 0,5 m/s | bar psi 20 290 | bar psi 150 2175 | ºC ºF 0 32 | ºC ºF 80 176 | 600 CP- |
|---|---|---|---|---|---|---|---|

AZOL GAS

# CSE 18300 V1 MOUNTS

*Power Compact Stroke*

## A14-150

ISO | E24.54.815.G | EM24.54.700/F

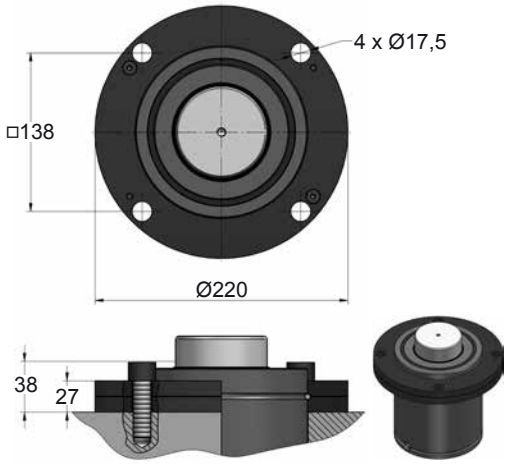


## A34-150

ISO | VDI

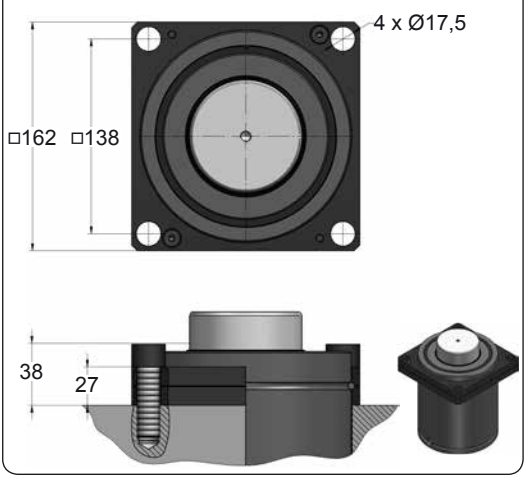


## C20-150

ISO | VDI | E24.54.815.G | EM24.54.700/F

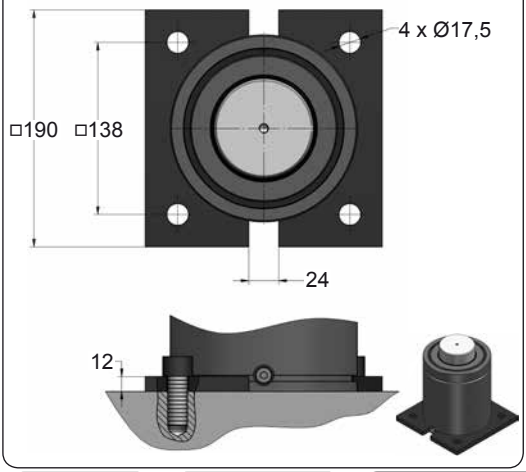


## D02-150

ISO | E24.54.815.G

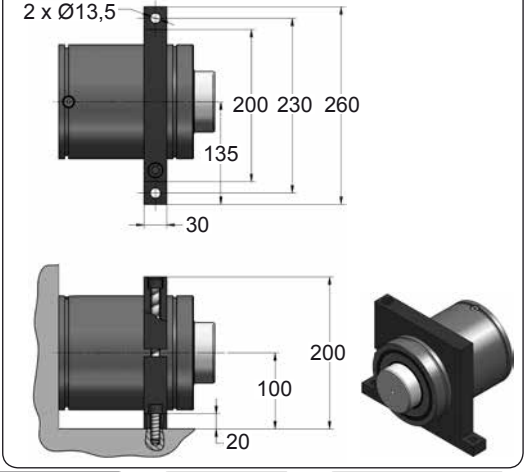









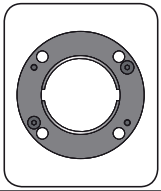

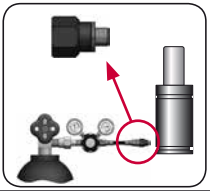

| CODE | | CSE 18300 050 V1 | | A14-150 | 18 GA 5 |
|---|---|---|---|---|---|
| ENG | ORDER | GAS SPRING | REPAIR KIT | FLANGE | CHARGING ADAPTER |
| DEU | BESTELLUNG | GASDRUCKFEDER | ERSATZTEILSATZ | FLANSCHE | LADEADAPTER |
| FRA | COMMANDE | RESSORT À GAZ | KIT DE RÉPARATION | BRIDE | RACCORD DE CHARGE |
| ITA | ORDINE | CILINDRO AD AZOTO | KIT DI MANUTENZIONE | FLANGE | ADATTATORE DI CARICO |
| ESP | PEDIDO | RESORTE DE GAS | KIT DE REPARACION | BRIDA | ADAPTADOR DE CARGA |
| POR | PEDIDO | CILINDRO DE GÁS | KIT DE MANUTENÇÃO | FLANGE | ADAPTADOR DE CARGA |

AZOL GAS

# SPECIAL APPLICATIONS

## ROB / ROT



## VH



## ART



# ROB 750

*Special Applications*

AZOL GAS

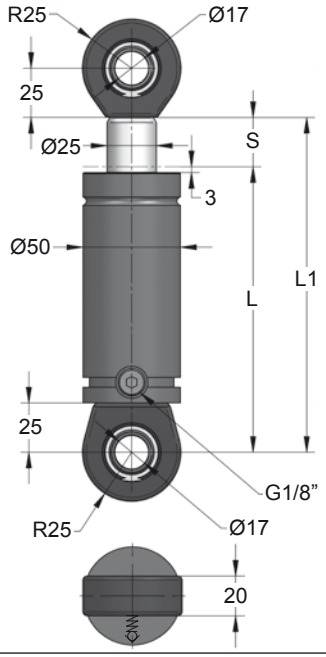


| ORDER | S (mm) | L1 ±0,25 (mm) | L (mm) | Kg. |
|---|---|---|---|---|
| ROB 750 012 | 12.7 | 145.4 | 132.7 | 1.74 |
| ROB 750 025 | 25 | 170 | 145 | 1.96 |
| ROB 750 038 | 38 | 196 | 158 | 2.04 |
| ROB 750 050 | 50 | 220 | 170 | 2.14 |
| ROB 750 063 | 63.5 | 247 | 183.5 | 2.24 |
| ROB 750 080 | 80 | 280 | 200 | 2.44 |
| ROB 750 100 | 100 | 320 | 220 | 2.68 |
| ROB 750 125 | 125 | 370 | 245 | 2.84 |
| ROB 750 160 | 160 | 440 | 280 | 3.12 |

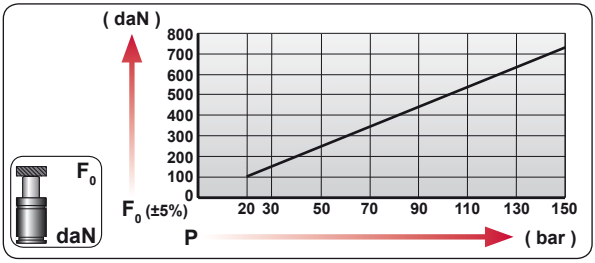


| CODE | bar | psi | F0 daN | F1 daN |
|---|---|---|---|---|
| ROB 750 050 | 150 | 2175 | 740 | 1100 |
| --------- | --- | --- | --- | --- |

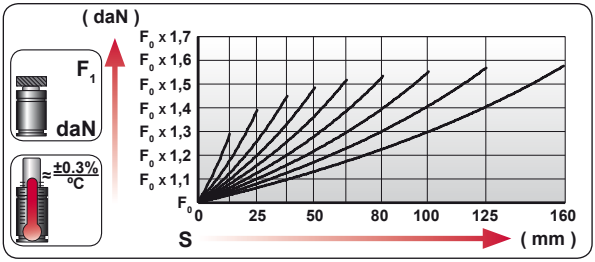


| | |
|---|---|
| ENG | ORDER |
| DEU | BESTELLUNG |
| FRA | COMMANDE |
| ITA | ORDINE |
| ESP | PEDIDO |
| POR | PEDIDO |

F0 daN — S mm

ROB 750 50

ROB 750 050

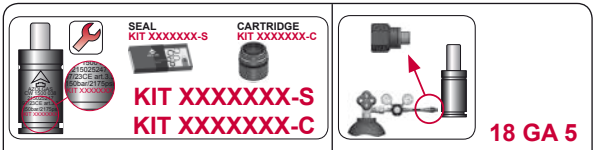


| | | |
|---|---|---|
| ENG | REPAIR KIT | CHARGING ADAPTER |
| DEU | ERSATZ | LADEADAPTER |
| FRA | KIT DE RÉPARATION | RACCORD DE CHARGE |
| ITA | KIT DI MANUTENZIONE | ADATTATORE DI CARICO |
| ESP | KIT DE REPARACION | ADAPTADOR DE CARGA |
| POR | KIT DE MANUTENÇÃO | ADAPTADOR DE CARGA |

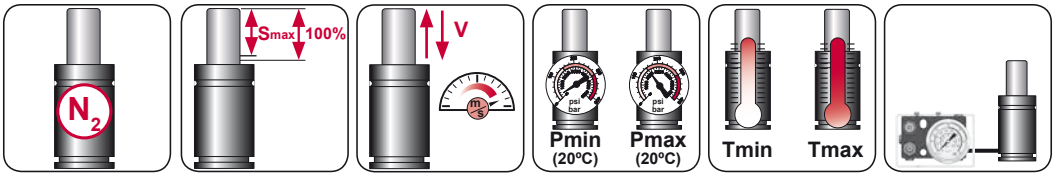


| $N_2$ | Smax < 90% | Vmax 1,6 m/s | bar psi 20 290 | bar psi 150 2175 | °C °F 0 32 | °C °F 80 176 | 600 CP- |
|---|---|---|---|---|---|---|---|

# AZOL GAS ROT 750

*Special Applications*

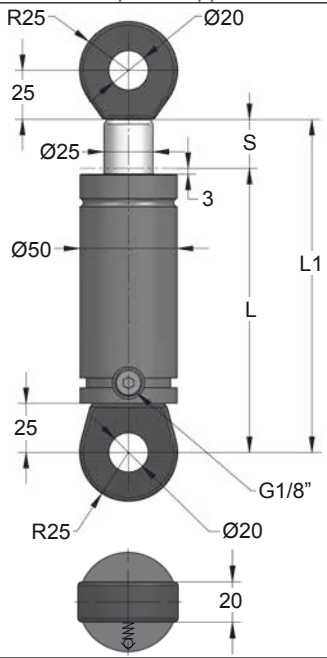


| ORDER | S (mm) | L1 ±0,25 (mm) | L (mm) | Kg. |
|---|---|---|---|---|
| ROT 750 012 | 12.7 | 145.4 | 132.7 | 1.74 |
| ROT 750 025 | 25 | 170 | 145 | 1.96 |
| ROT 750 038 | 38 | 196 | 158 | 2.04 |
| ROT 750 050 | 50 | 220 | 170 | 2.14 |
| ROT 750 063 | 63.5 | 247 | 183.5 | 2.24 |
| ROT 750 080 | 80 | 280 | 200 | 2.44 |
| ROT 750 100 | 100 | 320 | 220 | 2.68 |
| ROT 750 125 | 125 | 370 | 245 | 2.84 |
| ROT 750 160 | 160 | 440 | 280 | 3.12 |

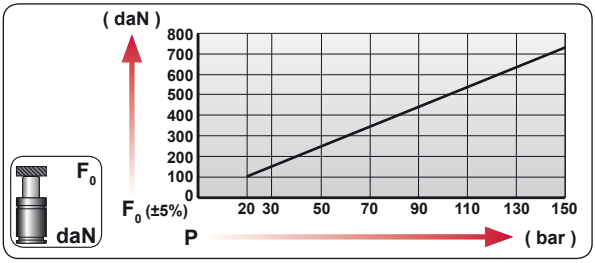


| CODE | bar | psi | F0 daN | F1 daN |
|---|---|---|---|---|
| ROT 750 050 | 150 | 2175 | 740 | 1100 |
| --------- | --- | --- | --- | --- |

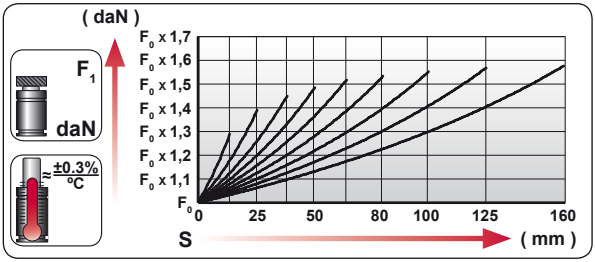


| | |
|---|---|
| ENG | ORDER |
| DEU | BESTELLUNG |
| FRA | COMMANDE |
| ITA | ORDINE |
| ESP | PEDIDO |
| POR | PEDIDO |

F0 daN — S mm

ROT 750 50

ROT 750 050




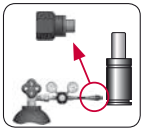

18 GA 5

| | | |
|---|---|---|
| ENG | REPAIR KIT | CHARGING ADAPTER |
| DEU | ERSATZ | LADEADAPTER |
| FRA | KIT DE RÉPARATION | RACCORD DE CHARGE |
| ITA | KIT DI MANUTENZIONE | ADATTATORE DI CARICO |
| ESP | KIT DE REPARACION | ADAPTADOR DE CARGA |
| POR | KIT DE MANUTENÇÃO | ADAPTADOR DE CARGA |

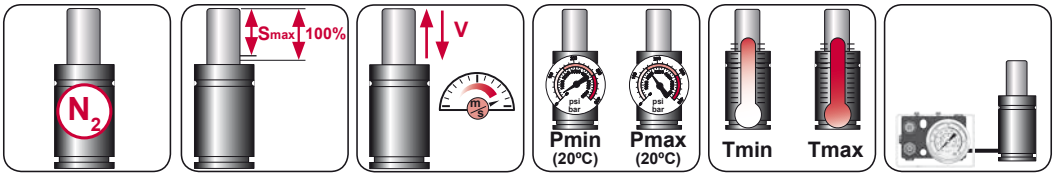


| $N_2$ | Smax < 90% | Vmax 1,6 m/s | bar psi 20 290 | bar psi 150 2175 | °C °F 0 32 | °C °F 80 176 | 600 CP- |
|---|---|---|---|---|---|---|---|

# ROB 1500

*Special Applications*

AZOL GAS

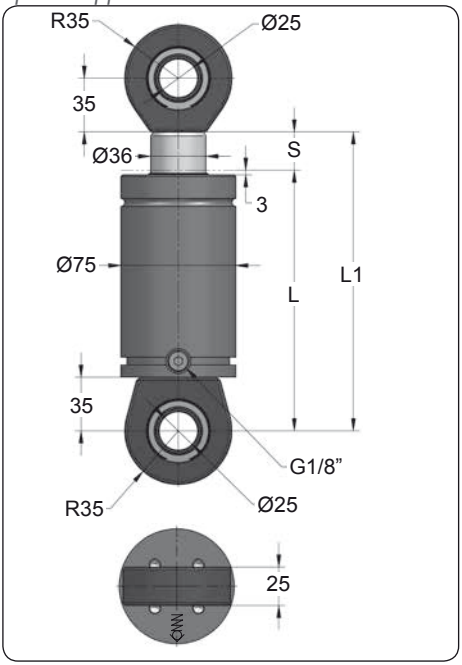


| ORDER | S (mm) | L1 ±0,25 (mm) | L (mm) | Kg. |
|---|---|---|---|---|
| ROB 1500 012 | 12.7 | 170.4 | 157.7 | 4.36 |
| ROB 1500 025 | 25 | 195 | 170 | 4.61 |
| ROB 1500 038 | 38 | 221 | 183 | 4.88 |
| ROB 1500 050 | 50 | 245 | 195 | 5.12 |
| ROB 1500 063 | 63.5 | 272 | 208.5 | 5.40 |
| ROB 1500 080 | 80 | 305 | 225 | 5.73 |
| ROB 1500 100 | 100 | 345 | 245 | 6.14 |
| ROB 1500 125 | 125 | 395 | 270 | 6.65 |
| ROB 1500 160 | 160 | 465 | 305 | 7.37 |

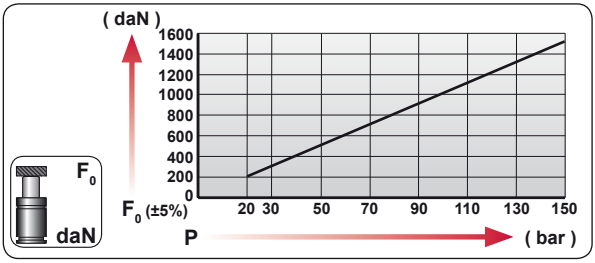


| CODE | bar | psi | $F_0$ daN | $F_1$ daN |
|---|---|---|---|---|
| ROB 1500 050 | 150 | 2175 | 1530 | 2070 |
| --------- | --- | --- | --- | --- |

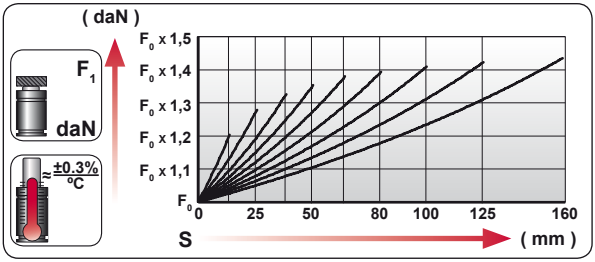


| | | | |
|---|---|---|---|
| ENG | ORDER | $F_0$ daN | S mm |
| DEU | BESTELLUNG | | |
| FRA | COMMANDE | | |
| ITA | ORDINE | | |
| ESP | PEDIDO | | |
| POR | PEDIDO | | |

ROB 1500 50

ROB 1500 050




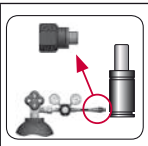

18 GA 5

| | | |
|---|---|---|
| ENG | REPAIR KIT | CHARGING ADAPTER |
| DEU | ERSATZ | LADEADAPTER |
| FRA | KIT DE RÉPARATION | RACCORD DE CHARGE |
| ITA | KIT DI MANUTENZIONE | ADATTATORE DI CARICO |
| ESP | KIT DE REPARACION | ADAPTADOR DE CARGA |
| POR | KIT DE MANUTENÇÃO | ADAPTADOR DE CARGA |

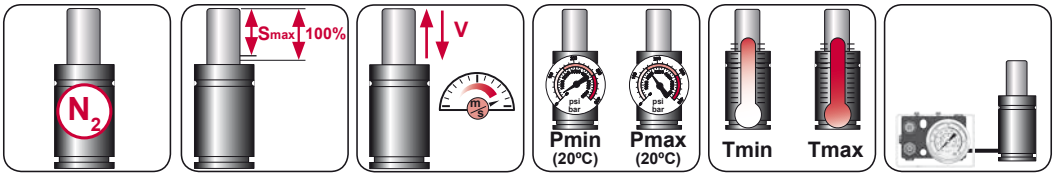


| $N_2$ | Smax < 90% | Vmax 1,6 m/s | bar psi 20 290 | bar psi 150 2175 | °C °F 0 32 | °C °F 80 176 | 600 CP- |
|---|---|---|---|---|---|---|---|

# AZOL GAS ROT 1500

*Special Applications*

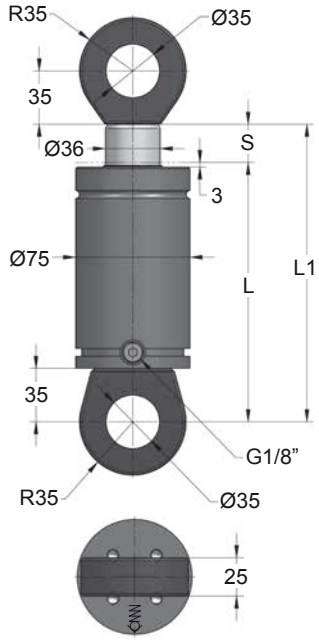


| ORDER | S (mm) | L1 ±0,25 (mm) | L (mm) | Kg. |
|---|---|---|---|---|
| ROT 1500 012 | 12.7 | 170.4 | 157.7 | 4.36 |
| ROT 1500 025 | 25 | 195 | 170 | 4.61 |
| ROT 1500 038 | 38 | 221 | 183 | 4.88 |
| ROT 1500 050 | 50 | 245 | 195 | 5.12 |
| ROT 1500 063 | 63.5 | 272 | 208.5 | 5.40 |
| ROT 1500 080 | 80 | 305 | 225 | 5.73 |
| ROT 1500 100 | 100 | 345 | 245 | 6.14 |
| ROT 1500 125 | 125 | 395 | 270 | 6.65 |
| ROT 1500 160 | 160 | 465 | 305 | 7.37 |

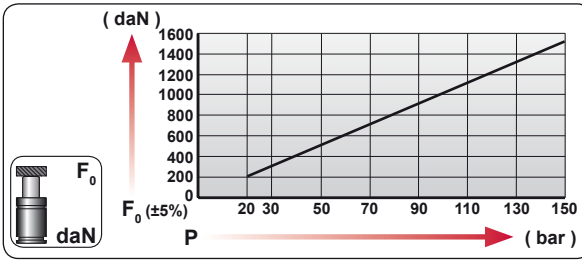


| CODE | bar | psi | $F_0$ daN | $F_1$ daN |
|---|---|---|---|---|
| ROT 1500 050 | 150 | 2175 | 1530 | 2070 |
| --------- | --- | --- | --- | --- |

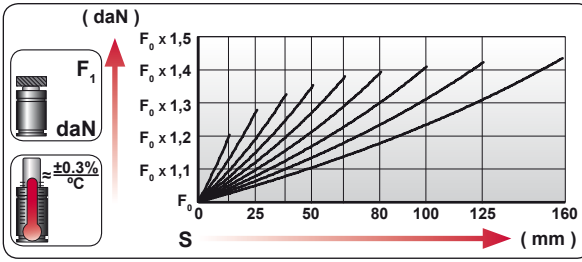


| | | | |
|---|---|---|---|
| ENG | ORDER | $F_0$ daN | S mm |
| DEU | BESTELLUNG | | |
| FRA | COMMANDE | | |
| ITA | ORDINE | | |
| ESP | PEDIDO | | |
| POR | PEDIDO | | |

ROT 1500 050

SEAL KIT XXXXXXX-S

CARTRIDGE KIT XXXXXXX-C

**KIT XXXXXXX-S**

**KIT XXXXXXX-C**

**18 GA 5**

| | | |
|---|---|---|
| ENG | REPAIR KIT | CHARGING ADAPTER |
| DEU | ERSATZ | LADEADAPTER |
| FRA | KIT DE RÉPARATION | RACCORD DE CHARGE |
| ITA | KIT DI MANUTENZIONE | ADATTATORE DI CARICO |
| ESP | KIT DE REPARACION | ADAPTADOR DE CARGA |
| POR | KIT DE MANUTENÇÃO | ADAPTADOR DE CARGA |

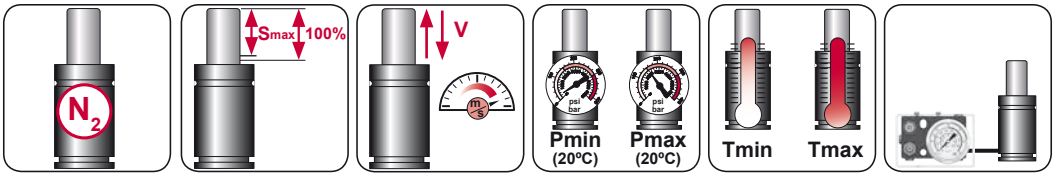


| $N_2$ | Smax < 90% | Vmax 1,6 m/s | bar psi 20 290 | bar psi 150 2175 | °C °F 0 32 | °C °F 80 176 | 600 CP- |
|---|---|---|---|---|---|---|---|

# ROB 3000

*Special Applications*

AZOL GAS

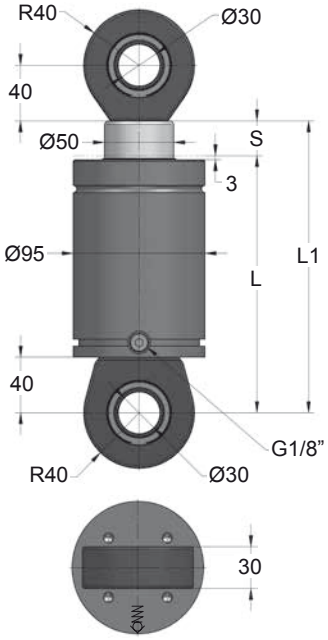


| ORDER | S (mm) | L1 ±0,25 (mm) | L (mm) | Kg. |
|---|---|---|---|---|
| ROB 3000 012 | 12.7 | 185.4 | 172.7 | 7.68 |
| ROB 3000 025 | 25 | 210 | 185 | 7.98 |
| ROB 3000 038 | 38 | 236 | 198 | 8.44 |
| ROB 3000 050 | 50 | 260 | 210 | 8.98 |
| ROB 3000 063 | 63.5 | 287 | 223.5 | 9.38 |
| ROB 3000 080 | 80 | 320 | 240 | 10.39 |
| ROB 3000 100 | 100 | 360 | 260 | 10.58 |
| ROB 3000 125 | 125 | 410 | 285 | 11.16 |
| ROB 3000 160 | 160 | 480 | 320 | 12.26 |

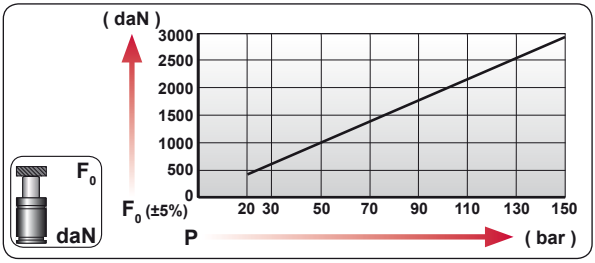


| CODE | bar | psi | $F_0$ daN | $F_1$ daN |
|---|---|---|---|---|
| ROB 3000 050 | 150 | 2175 | 2945 | 4180 |
| --------- | --- | --- | --- | --- |

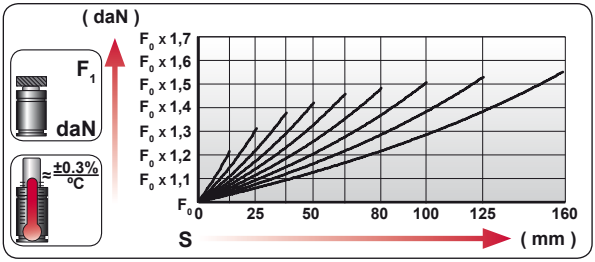


| | |
|---|---|
| ENG | ORDER |
| DEU | BESTELLUNG |
| FRA | COMMANDE |
| ITA | ORDINE |
| ESP | PEDIDO |
| POR | PEDIDO |

$F_0$ daN

S mm

ROB 3000 50

ROB 3000 050




KIT XXXXXXX-S
KIT XXXXXXX-C

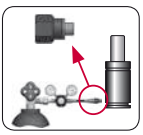

18 GA 5

| | | |
|---|---|---|
| ENG | REPAIR KIT | CHARGING ADAPTER |
| DEU | ERSATZ | LADEADAPTER |
| FRA | KIT DE RÉPARATION | RACCORD DE CHARGE |
| ITA | KIT DI MANUTENZIONE | ADATTATORE DI CARICO |
| ESP | KIT DE REPARACION | ADAPTADOR DE CARGA |
| POR | KIT DE MANUTENÇÃO | ADAPTADOR DE CARGA |

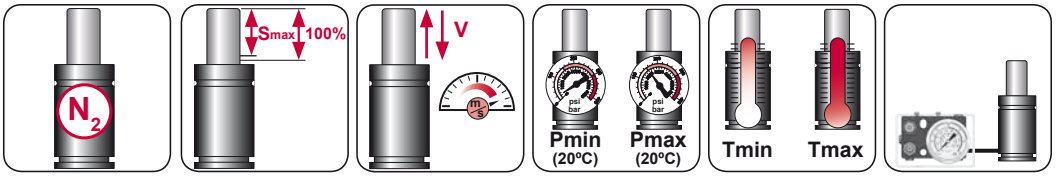


| $N_2$ | Smax < 90% | Vmax 1,6 m/s | bar psi 20 290 | bar psi 150 2175 | °C °F 0 32 | °C °F 80 176 | 600 CP- |
|---|---|---|---|---|---|---|---|

# AZOL GAS ROT 3000

*Special Applications*

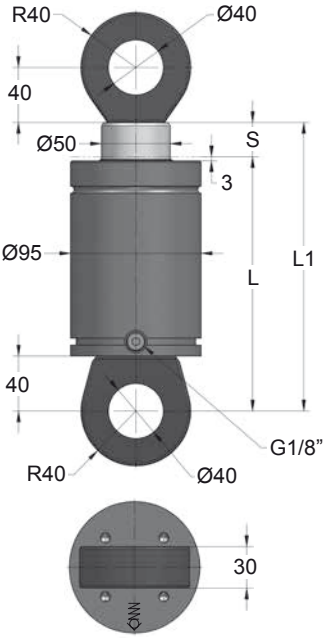


| ORDER | S (mm) | L1 ±0,25 (mm) | L (mm) | Kg. |
|---|---|---|---|---|
| ROT 3000 012 | 12.7 | 185.4 | 172.7 | 7.68 |
| ROT 3000 025 | 25 | 210 | 185 | 7.98 |
| ROT 3000 038 | 38 | 236 | 198 | 8.44 |
| ROT 3000 050 | 50 | 260 | 210 | 8.98 |
| ROT 3000 063 | 63.5 | 287 | 223.5 | 9.38 |
| ROT 3000 080 | 80 | 320 | 240 | 10.39 |
| ROT 3000 100 | 100 | 360 | 260 | 10.58 |
| ROT 3000 125 | 125 | 410 | 285 | 11.16 |
| ROT 3000 160 | 160 | 480 | 320 | 12.26 |

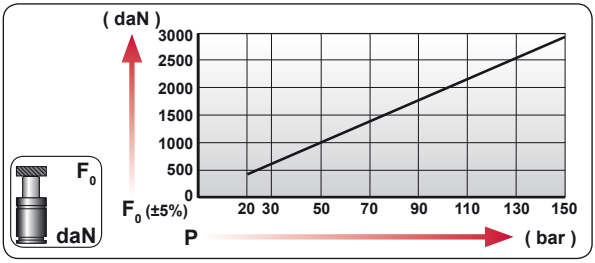


| CODE | bar | psi | F0 daN | F1 daN |
|---|---|---|---|---|
| ROT 3000 050 | 150 | 2175 | 2945 | 4180 |
| --------- | --- | --- | --- | --- |

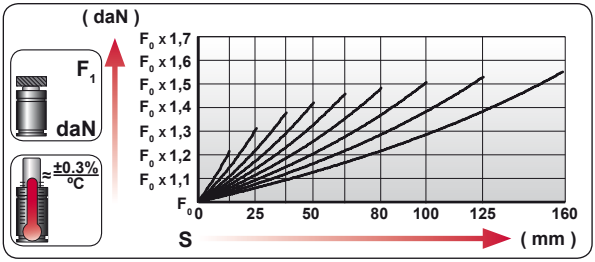


| | |
|---|---|
| ENG | ORDER |
| DEU | BESTELLUNG |
| FRA | COMMANDE |
| ITA | ORDINE |
| ESP | PEDIDO |
| POR | PEDIDO |

F0 daN — S mm

ROT 3000 50

ROT 3000 050

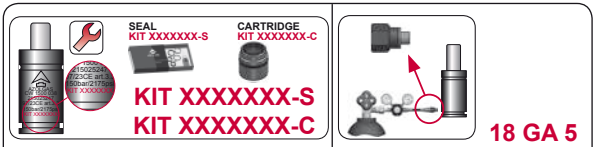


| | | |
|---|---|---|
| ENG | REPAIR KIT | CHARGING ADAPTER |
| DEU | ERSATZ | LADEADAPTER |
| FRA | KIT DE RÉPARATION | RACCORD DE CHARGE |
| ITA | KIT DI MANUTENZIONE | ADATTATORE DI CARICO |
| ESP | KIT DE REPARACION | ADAPTADOR DE CARGA |
| POR | KIT DE MANUTENÇÃO | ADAPTADOR DE CARGA |

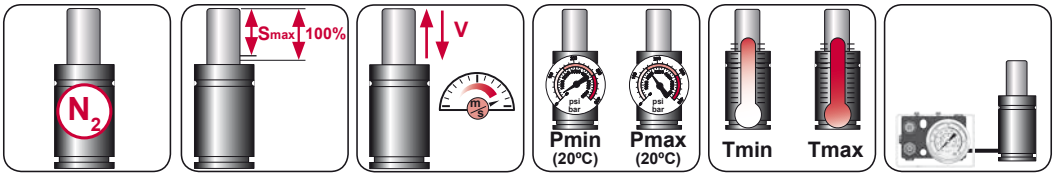


| $N_2$ | Smax < 90% | Vmax 1,6 m/s | bar psi 20 290 | bar psi 150 2175 | °C °F 0 32 | °C °F 80 176 | 600 CP- |
|---|---|---|---|---|---|---|---|

# ROB 5000

*Special Applications*

AZOL GAS

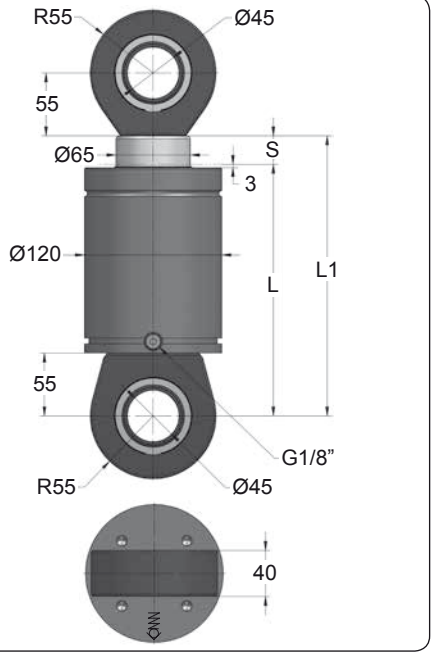


| ORDER | S (mm) | L1 ±0,25 (mm) | L (mm) | Kg. |
|---|---|---|---|---|
| ROB 5000 012 | 12.7 | 220.4 | 207.7 | 15.79 |
| ROB 5000 025 | 25 | 245 | 220 | 16.96 |
| ROB 5000 038 | 38 | 271 | 233 | 17.11 |
| ROB 5000 050 | 50 | 295 | 245 | 17.45 |
| ROB 5000 063 | 63.5 | 322 | 258.5 | 18.17 |
| ROB 5000 080 | 80 | 355 | 275 | 19.76 |
| ROB 5000 100 | 100 | 395 | 295 | 20.21 |
| ROB 5000 125 | 125 | 445 | 320 | 21.56 |
| ROB 5000 160 | 160 | 515 | 355 | 23.36 |

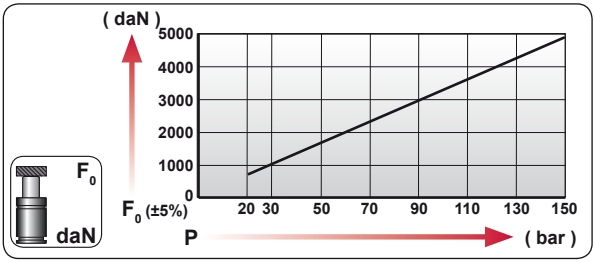


| CODE | bar | psi | F0 daN | F1 daN |
|---|---|---|---|---|
| ROB 5000 050 | 150 | 2175 | 4980 | 7170 |
| --------- | --- | --- | --- | --- |

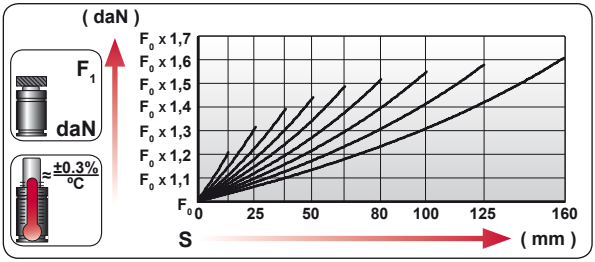


| | |
|---|---|
| ENG | ORDER |
| DEU | BESTELLUNG |
| FRA | COMMANDE |
| ITA | ORDINE |
| ESP | PEDIDO |
| POR | PEDIDO |

F0 daN — S mm

ROB 5000 50

ROB 5000 050

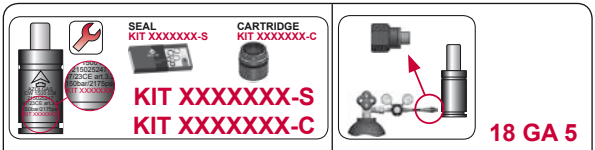


| | | |
|---|---|---|
| ENG | REPAIR KIT | CHARGING ADAPTER |
| DEU | ERSATZ | LADEADAPTER |
| FRA | KIT DE RÉPARATION | RACCORD DE CHARGE |
| ITA | KIT DI MANUTENZIONE | ADATTATORE DI CARICO |
| ESP | KIT DE REPARACION | ADAPTADOR DE CARGA |
| POR | KIT DE MANUTENÇÃO | ADAPTADOR DE CARGA |

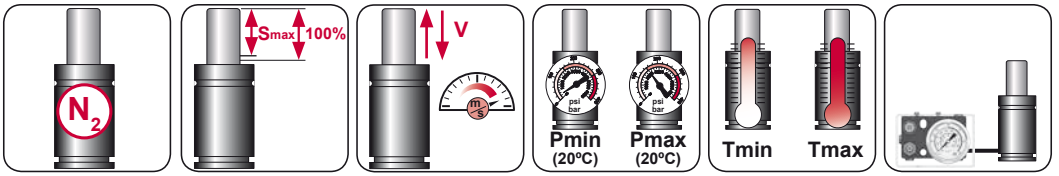


| $N_2$ | Smax < 90% | Vmax 1,6 m/s | bar psi 20 290 | bar psi 150 2175 | °C °F 0 32 | °C °F 80 176 | 600 CP- |
|---|---|---|---|---|---|---|---|

# AZOL GAS ROT 5000

*Special Applications*

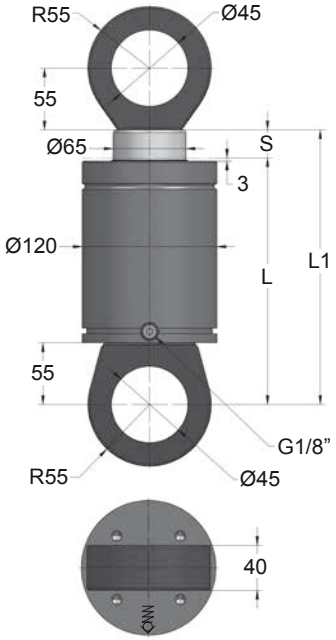


| ORDER | S (mm) | L1 ±0,25 (mm) | L (mm) | Kg. |
|---|---|---|---|---|
| ROT 5000 012 | 12.7 | 220.4 | 207.7 | 15.79 |
| ROT 5000 025 | 25 | 245 | 220 | 16.96 |
| ROT 5000 038 | 38 | 271 | 233 | 17.11 |
| ROT 5000 050 | 50 | 295 | 245 | 17.45 |
| ROT 5000 063 | 63.5 | 322 | 258.5 | 18.17 |
| ROT 5000 080 | 80 | 355 | 275 | 19.76 |
| ROT 5000 100 | 100 | 395 | 295 | 20.21 |
| ROT 5000 125 | 125 | 445 | 320 | 21.56 |
| ROT 5000 160 | 160 | 515 | 355 | 23.36 |

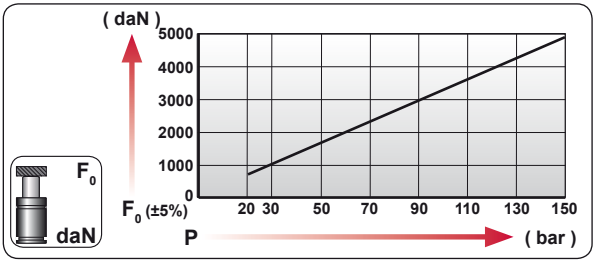


| CODE | bar | psi | F0 daN | F1 daN |
|---|---|---|---|---|
| ROT 5000 050 | 150 | 2175 | 4980 | 7170 |
| --------- | --- | --- | --- | --- |

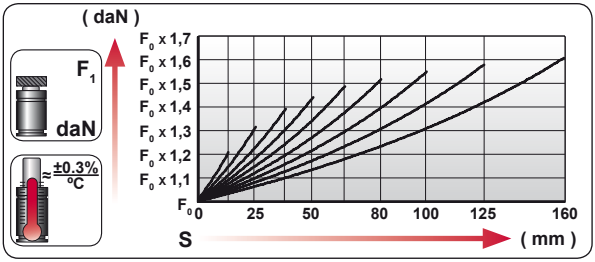


| | |
|---|---|
| ENG | ORDER |
| DEU | BESTELLUNG |
| FRA | COMMANDE |
| ITA | ORDINE |
| ESP | PEDIDO |
| POR | PEDIDO |

F0 daN — S mm

ROT 5000 050



SEAL KIT XXXXXXX-S

CARTRIDGE KIT XXXXXXX-C

**KIT XXXXXXX-S**
**KIT XXXXXXX-C**

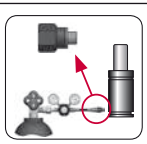

**18 GA 5**

| | | |
|---|---|---|
| ENG | REPAIR KIT | CHARGING ADAPTER |
| DEU | ERSATZ | LADEADAPTER |
| FRA | KIT DE RÉPARATION | RACCORD DE CHARGE |
| ITA | KIT DI MANUTENZIONE | ADATTATORE DI CARICO |
| ESP | KIT DE REPARACION | ADAPTADOR DE CARGA |
| POR | KIT DE MANUTENÇÃO | ADAPTADOR DE CARGA |




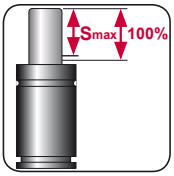


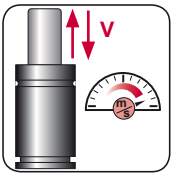


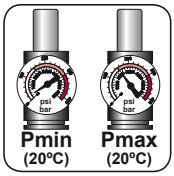


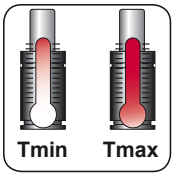




| $N_2$ | Smax < 90% | Vmax 1,6 m/s | bar psi 20 290 | bar psi 150 2175 | °C °F 0 32 | °C °F 80 176 | 600 CP- |
|---|---|---|---|---|---|---|---|

# VH 500

*Special Applications*

AZOL GAS

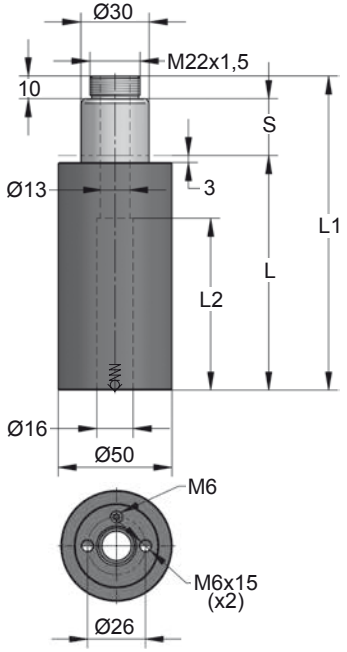


| ORDER | S (mm) | L1 ±0,25 (mm) | L (mm) | L2 (mm) | Kg. |
|---|---|---|---|---|---|
| VH 500 010 | 10 | 108 | 88 | 45.5 | 0.98 |
| VH 500 015 | 15 | 118 | 93 | 55.5 | 1.01 |
| VH 500 025 | 25 | 138 | 103 | 75.5 | 1.09 |
| VH 500 038 | 38 | 164 | 116 | 85.5 | 1.18 |
| VH 500 050 | 50 | 188 | 128 | 97.5 | 1.27 |
| VH 500 080 | 80 | 248 | 158 | 127.5 | 1.50 |
| VH 500 100 | 100 | 288 | 178 | 147.5 | 1.65 |

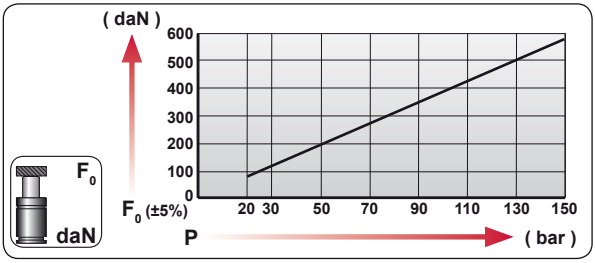


| CODE | bar | psi | $F_0$ daN | $F_1$ daN |
|---|---|---|---|---|
| VH 500 050 | 130 | 1885 | 510 | 730 |
| --------- | --- | --- | --- | --- |

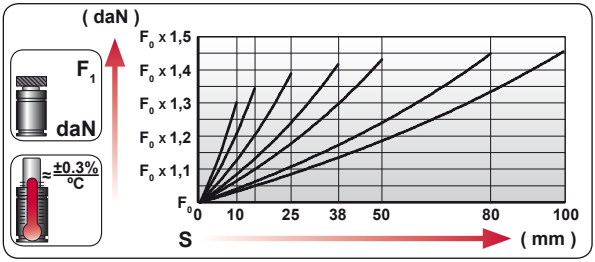


| | |
|---|---|
| ENG | ORDER |
| DEU | BESTELLUNG |
| FRA | COMMANDE |
| ITA | ORDINE |
| ESP | PEDIDO |
| POR | PEDIDO |

$F_0$ daN — S mm

VH 500 50

VH 500 050

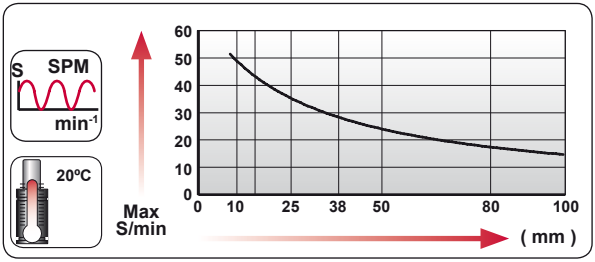


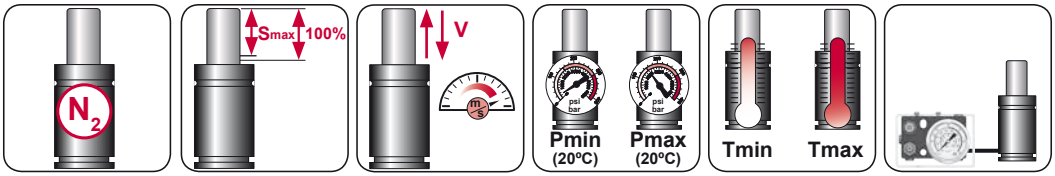


| $N_2$ | Smax < 90% | Vmax 0,5 m/s | bar psi 20 290 | bar psi 150 2175 | ºC ºF 0 32 | ºC ºF 80 176 | |
|---|---|---|---|---|---|---|---|

AZOL GAS

# VH 500 MOUNTS

*Special Applications*

## B31-050

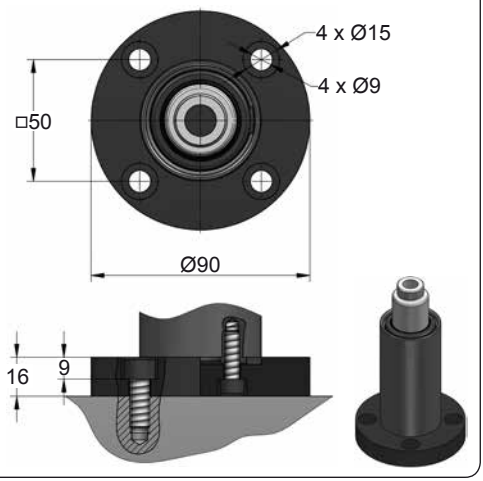


## E33-050

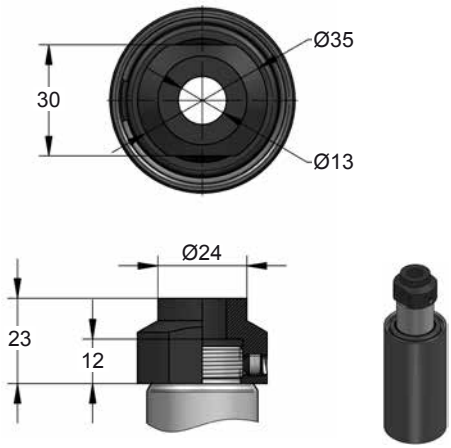





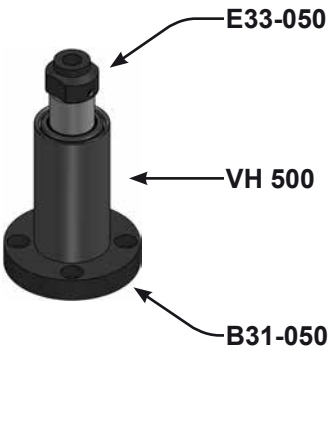









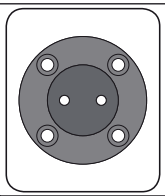

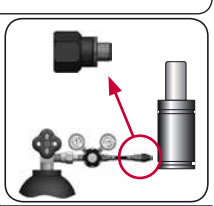

| CODE | | VH 500 050 | KIT XXXXXXX-S<br>KIT XXXXXXX-C | B31-050 | 06 GA 11 |
|---|---|---|---|---|---|
| ENG | ORDER | GAS SPRING | REPAIR KIT | FLANGE | CHARGING ADAPTER |
| DEU | BESTELLUNG | GASDRUCKFEDER | ERSATZTEILSATZ | FLANSCHE | LADEADAPTER |
| FRA | COMMANDE | RESSORT À GAZ | KIT DE RÉPARATION | BRIDE | RACCORD DE CHARGE |
| ITA | ORDINE | CILINDRO AD AZOTO | KIT DI MANUTENZIONE | FLANGE | ADATTATORE DI CARICO |
| ESP | PEDIDO | RESORTE DE GAS | KIT DE REPARACION | BRIDA | ADAPTADOR DE CARGA |
| POR | PEDIDO | CILINDRO DE GÁS | KIT DE MANUTENÇÃO | FLANGE | ADAPTADOR DE CARGA |

# VH 1200

*Special Applications*

AZOL GAS

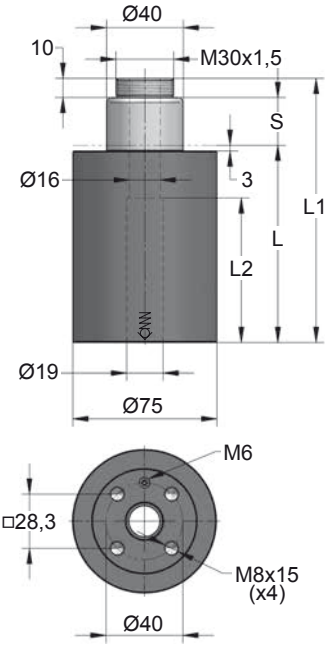


| ORDER | S (mm) | L1 ±0,25 (mm) | L (mm) | L2 (mm) | Kg. |
|---|---|---|---|---|---|
| VH 1200 010 | 10 | 108 | 88 | 45.5 | 2.37 |
| VH 1200 015 | 15 | 118 | 93 | 55.5 | 2.45 |
| VH 1200 025 | 25 | 138 | 103 | 75.5 | 2.63 |
| VH 1200 038 | 38 | 164 | 116 | 85.5 | 2.86 |
| VH 1200 050 | 50 | 188 | 128 | 97.5 | 3.08 |
| VH 1200 080 | 80 | 248 | 158 | 127.5 | 3.61 |
| VH 1200 100 | 100 | 288 | 178 | 147.5 | 3.97 |

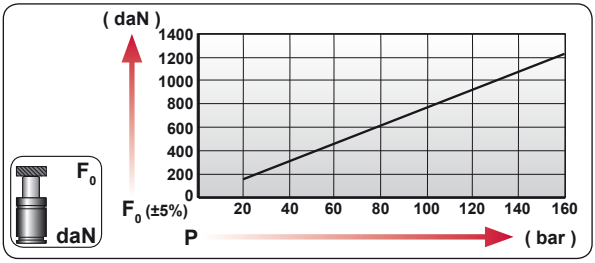


| CODE | bar | psi | F0 daN | F1 daN |
|---|---|---|---|---|
| VH 1200 050 | 160 | 2320 | 1225 | 1680 |
| --------- | --- | --- | --- | --- |

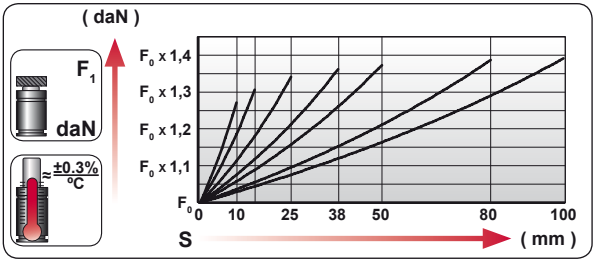


| ENG | ORDER |
|---|---|
| DEU | BESTELLUNG |
| FRA | COMMANDE |
| ITA | ORDINE |
| ESP | PEDIDO |
| POR | PEDIDO |

F0 daN — S mm

VH 1200 50

VH 1200 050

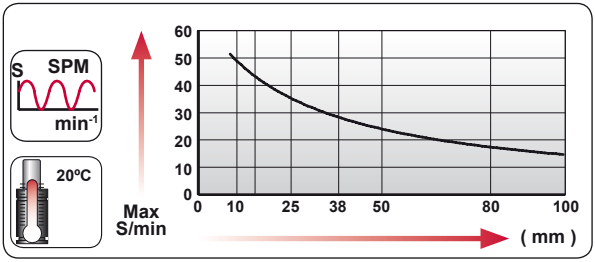


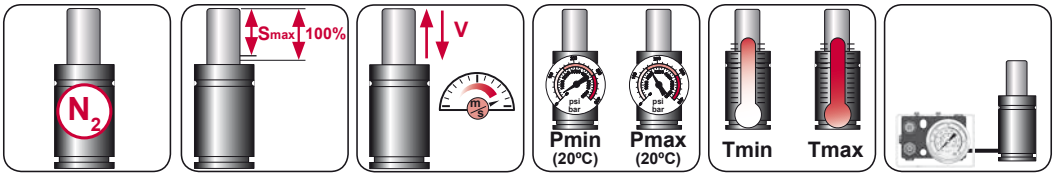


| $N_2$ | Smax < 90% | Vmax 0,5 m/s | bar psi 20 290 | bar psi 160 2320 | ºC ºF 0 32 | ºC ºF 80 176 | |
|---|---|---|---|---|---|---|---|

AZOL GAS

# VH 1200 MOUNTS

*Special Applications*

## B31-075

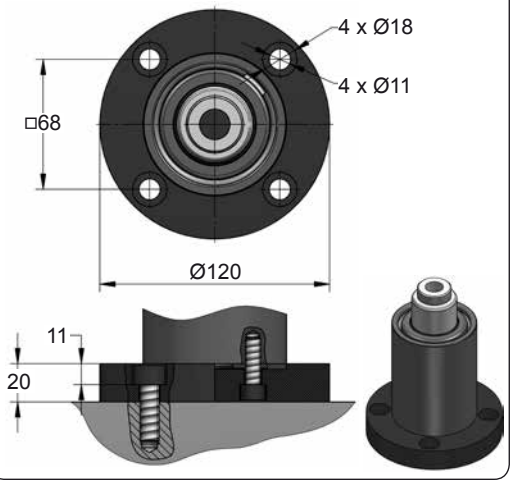


## E33-075

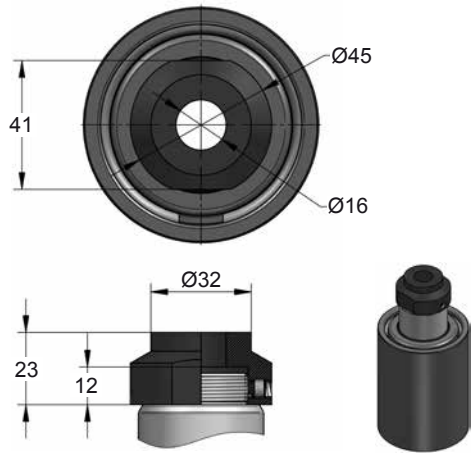





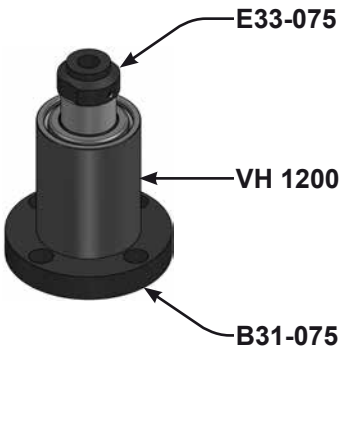





| CODE | | VH 1200 050 | KIT XXXXXXX-S<br>KIT XXXXXXX-C | B31-075 | 06 GA 11 |
|---|---|---|---|---|---|
| ENG | ORDER | GAS SPRING | REPAIR KIT | FLANGE | CHARGING ADAPTER |
| DEU | BESTELLUNG | GASDRUCKFEDER | ERSATZTEILSATZ | FLANSCHE | LADEADAPTER |
| FRA | COMMANDE | RESSORT À GAZ | KIT DE RÉPARATION | BRIDE | RACCORD DE CHARGE |
| ITA | ORDINE | CILINDRO AD AZOTO | KIT DI MANUTENZIONE | FLANGE | ADATTATORE DI CARICO |
| ESP | PEDIDO | RESORTE DE GAS | KIT DE REPARACION | BRIDA | ADAPTADOR DE CARGA |
| POR | PEDIDO | CILINDRO DE GÁS | KIT DE MANUTENÇÃO | FLANGE | ADAPTADOR DE CARGA |

# VH 2200

*Special Applications*

AZOL GAS

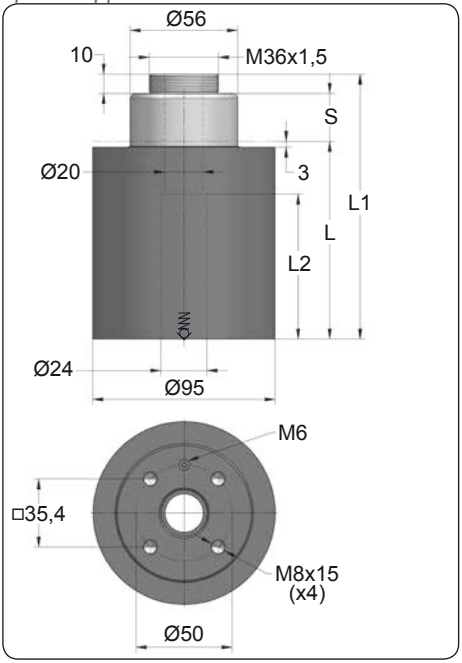


| ORDER | S (mm) | L1 ±0,25 (mm) | L (mm) | L2 (mm) | Kg. |
|---|---|---|---|---|---|
| VH 2200 010 | 10 | 108 | 88 | 45.5 | 3.88 |
| VH 2200 015 | 15 | 118 | 93 | 55.5 | 4.04 |
| VH 2200 025 | 25 | 138 | 103 | 75.5 | 4.36 |
| VH 2200 038 | 38 | 164 | 116 | 85.5 | 4.77 |
| VH 2200 050 | 50 | 188 | 128 | 97.5 | 5.16 |
| VH 2200 080 | 80 | 248 | 158 | 127.5 | 6.12 |
| VH 2200 100 | 100 | 288 | 178 | 147.5 | 6.76 |

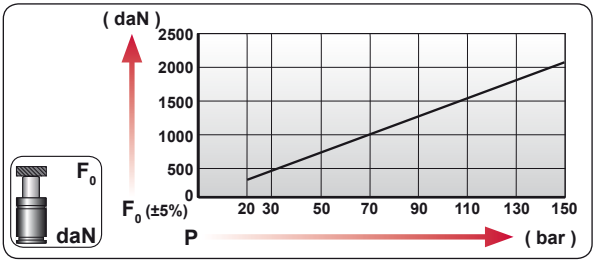


| CODE | bar | psi | F0 daN | F1 daN |
|---|---|---|---|---|
| VH 2200 050 | 150 | 2175 | 2168 | 3310 |
| --------- | --- | --- | --- | --- |

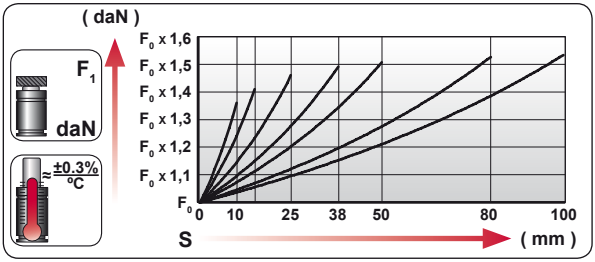


| | |
|---|---|
| ENG | ORDER |
| DEU | BESTELLUNG |
| FRA | COMMANDE |
| ITA | ORDINE |
| ESP | PEDIDO |
| POR | PEDIDO |




VH 2200 50

VH 2200 050

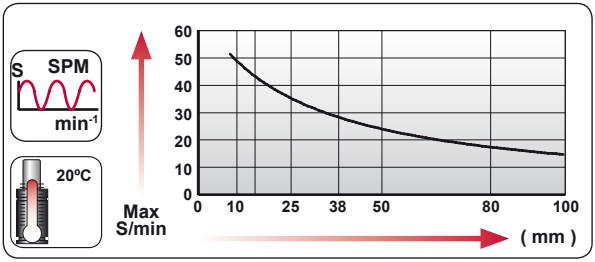


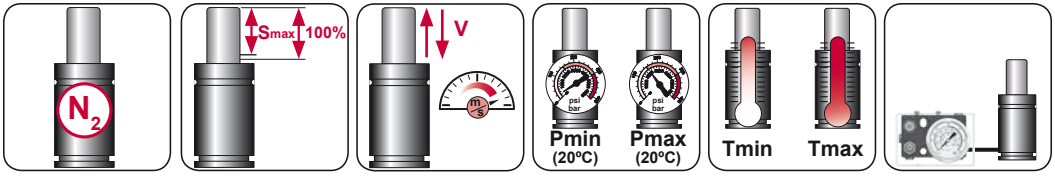


| $N_2$ | Smax < 90% | Vmax 0,5 m/s | bar psi 20 290 | bar psi 150 2175 | °C °F 0 32 | °C °F 80 176 | |
|---|---|---|---|---|---|---|---|

AZOL GAS

# VH 2200 MOUNTS

*Special Applications*

## B31-095

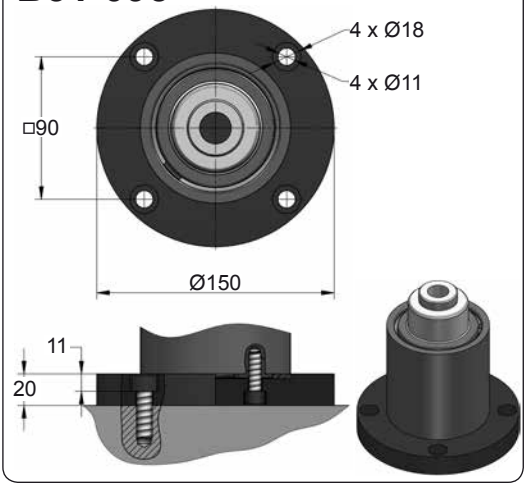


## E33-095

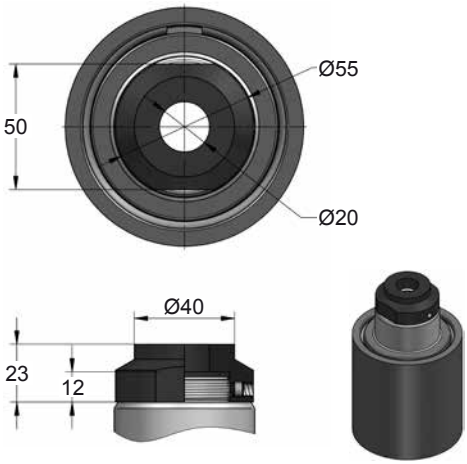


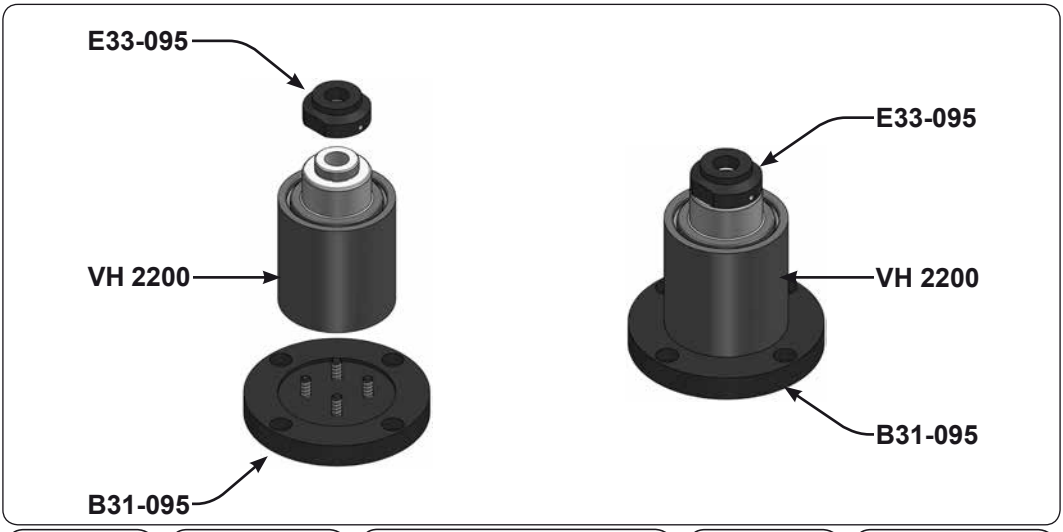





| CODE | | VH 2200 050 | KIT XXXXXXX-S<br>KIT XXXXXXX-C | B31-095 | 06 GA 11 |
|---|---|---|---|---|---|
| ENG | ORDER | GAS SPRING | REPAIR KIT | FLANGE | CHARGING ADAPTER |
| DEU | BESTELLUNG | GASDRUCKFEDER | ERSATZTEILSATZ | FLANSCHE | LADEADAPTER |
| FRA | COMMANDE | RESSORT À GAZ | KIT DE RÉPARATION | BRIDE | RACCORD DE CHARGE |
| ITA | ORDINE | CILINDRO AD AZOTO | KIT DI MANUTENZIONE | FLANGE | ADATTATORE DI CARICO |
| ESP | PEDIDO | RESORTE DE GAS | KIT DE REPARACION | BRIDA | ADAPTADOR DE CARGA |
| POR | PEDIDO | CILINDRO DE GÁS | KIT DE MANUTENÇÃO | FLANGE | ADAPTADOR DE CARGA |

# ART 180

*Special Applications*

AZOL GAS

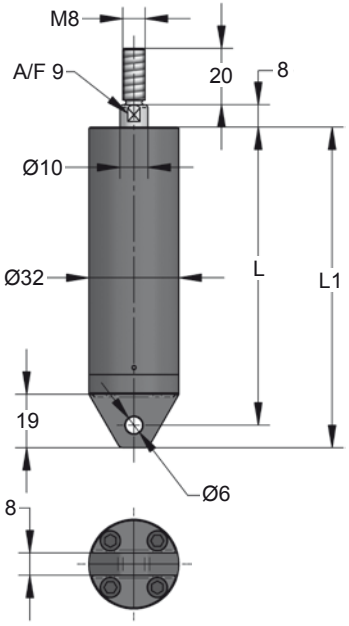


| ORDER | S (mm) | L1 ±0,25 (mm) | L (mm) | Kg. |
|---|---|---|---|---|
| ART 180 015 | 15 | 114 | 106 | 0.52 |
| ART 180 025 | 25 | 134 | 126 | 0.59 |
| ART 180 038 | 38 | 160 | 152 | 0.67 |
| ART 180 050 | 50 | 184 | 176 | 0.74 |
| ART 180 080 | 80 | 244 | 236 | 0.93 |
| ART 180 100 | 100 | 284 | 276 | 1.06 |
| ART 180 125 | 125 | 334 | 326 | 1.21 |
| ART 180 160 | 160 | 404 | 396 | 1.43 |

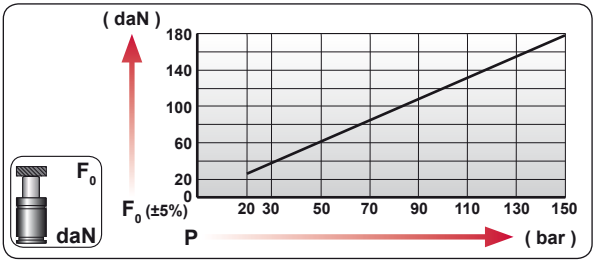


| CODE | bar | psi | $F_0$ daN | $F_1$ daN |
|---|---|---|---|---|
| ART 180 050 | 150 | 2175 | 180 | 240 |
| --------- | --- | --- | --- | --- |

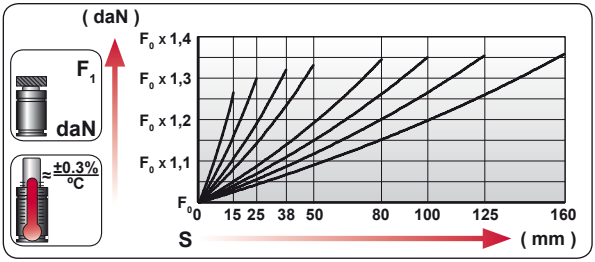


| | |
|---|---|
| ENG | ORDER |
| DEU | BESTELLUNG |
| FRA | COMMANDE |
| ITA | ORDINE |
| ESP | PEDIDO |
| POR | PEDIDO |

$F_0$ daN — S mm

ART 180 50

ART 180 050

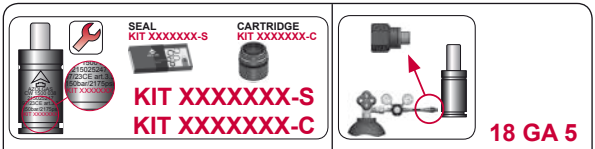


| | | |
|---|---|---|
| ENG | REPAIR KIT | CHARGING ADAPTER |
| DEU | ERSATZ | LADEADAPTER |
| FRA | KIT DE RÉPARATION | RACCORD DE CHARGE |
| ITA | KIT DI MANUTENZIONE | ADATTATORE DI CARICO |
| ESP | KIT DE REPARACION | ADAPTADOR DE CARGA |
| POR | KIT DE MANUTENÇÃO | ADAPTADOR DE CARGA |

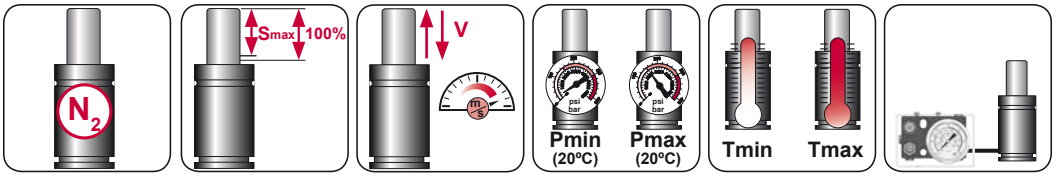


| $N_2$ | Smax < 90% | Vmax 0,5 m/s | bar psi 20 290 | bar psi 150 2175 | °C °F 0 32 | °C °F 80 176 |
|---|---|---|---|---|---|---|

# AZOL GAS ART 300

*Special Applications*

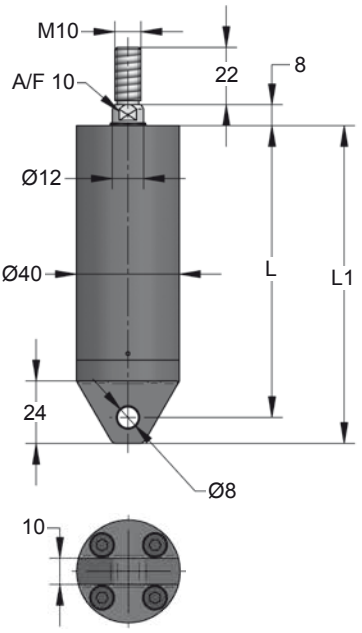


| ORDER | S (mm) | L1 ±0,25 (mm) | L (mm) | Kg. |
|---|---|---|---|---|
| ART 300 015 | 15 | 122 | 112 | 0.83 |
| ART 300 025 | 25 | 142 | 132 | 0.93 |
| ART 300 038 | 38 | 168 | 158 | 1.05 |
| ART 300 050 | 50 | 192 | 182 | 1.17 |
| ART 300 080 | 80 | 252 | 242 | 1.46 |
| ART 300 100 | 100 | 292 | 282 | 1.65 |
| ART 300 125 | 125 | 342 | 332 | 1.89 |
| ART 300 160 | 160 | 412 | 402 | 2.23 |

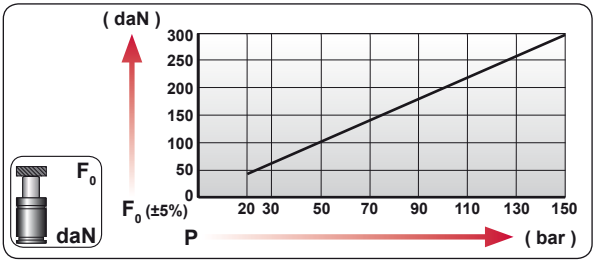


| CODE | bar | psi | F0 daN | F1 daN |
|---|---|---|---|---|
| ART 300 050 | 150 | 2175 | 300 | 410 |
| --------- | --- | --- | --- | --- |

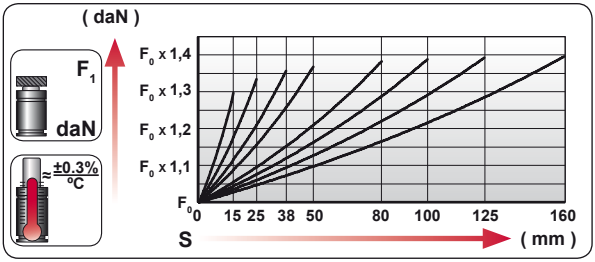


| | |
|---|---|
| ENG | ORDER |
| DEU | BESTELLUNG |
| FRA | COMMANDE |
| ITA | ORDINE |
| ESP | PEDIDO |
| POR | PEDIDO |

F0 daN | S mm

ART 300 50

ART 300 050




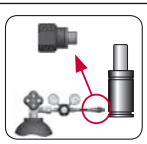


| | | |
|---|---|---|
| ENG | REPAIR KIT | CHARGING ADAPTER |
| DEU | ERSATZ | LADEADAPTER |
| FRA | KIT DE RÉPARATION | RACCORD DE CHARGE |
| ITA | KIT DI MANUTENZIONE | ADATTATORE DI CARICO |
| ESP | KIT DE REPARACION | ADAPTADOR DE CARGA |
| POR | KIT DE MANUTENÇÃO | ADAPTADOR DE CARGA |




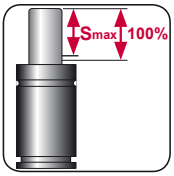


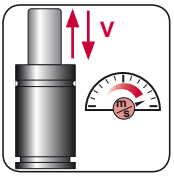


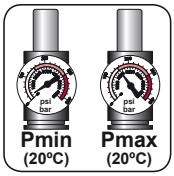


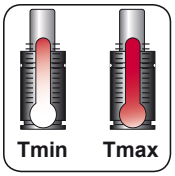




| $N_2$ | Smax < 90% | Vmax 0,5 m/s | bar psi 20 290 | bar psi 150 2175 | °C °F 0 32 | °C °F 80 176 | |
|---|---|---|---|---|---|---|---|

# ART 500

*Special Applications*

AZOL GAS

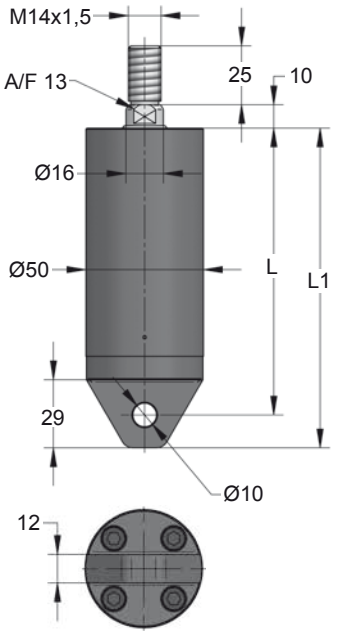


| ORDER | S (mm) | L1 ±0,25 (mm) | L (mm) | Kg. |
|---|---|---|---|---|
| ART 500 015 | 15 | 136 | 122 | 1.50 |
| ART 500 025 | 25 | 156 | 142 | 1.64 |
| ART 500 038 | 38 | 182 | 168 | 1.82 |
| ART 500 050 | 50 | 206 | 192 | 1.99 |
| ART 500 080 | 80 | 266 | 252 | 2.41 |
| ART 500 100 | 100 | 306 | 292 | 2.69 |
| ART 500 125 | 125 | 356 | 342 | 3.05 |
| ART 500 160 | 160 | 426 | 412 | 3.54 |

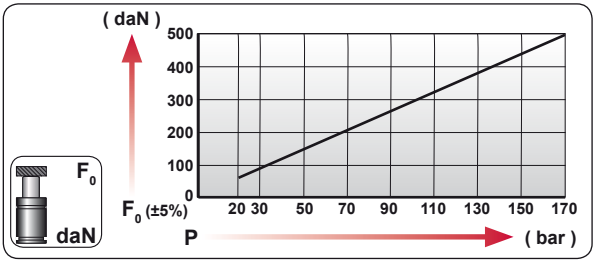


| CODE | bar | psi | $F_0$ daN | $F_1$ daN |
|---|---|---|---|---|
| ART 500 050 | 170 | 2465 | 500 | 670 |
| --------- | --- | --- | --- | --- |

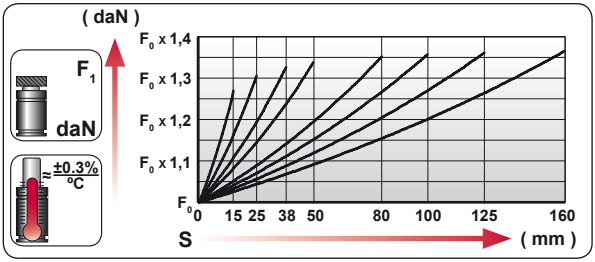


| | |
|---|---|
| ENG | ORDER |
| DEU | BESTELLUNG |
| FRA | COMMANDE |
| ITA | ORDINE |
| ESP | PEDIDO |
| POR | PEDIDO |

$F_0$ daN — S mm

ART 500 50

ART 500 050

SEAL KIT XXXXXXX-S

CARTRIDGE KIT XXXXXXX-C

**KIT XXXXXXX-S**

**KIT XXXXXXX-C**

**18 GA 5**

| | | |
|---|---|---|
| ENG | REPAIR KIT | CHARGING ADAPTER |
| DEU | ERSATZ | LADEADAPTER |
| FRA | KIT DE RÉPARATION | RACCORD DE CHARGE |
| ITA | KIT DI MANUTENZIONE | ADATTATORE DI CARICO |
| ESP | KIT DE REPARACION | ADAPTADOR DE CARGA |
| POR | KIT DE MANUTENÇÃO | ADAPTADOR DE CARGA |

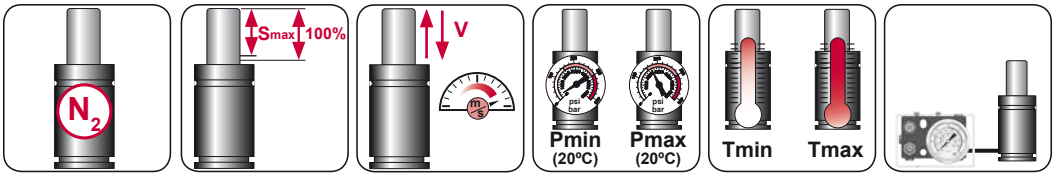


| $N_2$ | Smax < 90% | Vmax 0,5 m/s | bar psi 20 290 | bar psi 170 2465 | °C °F 0 32 | °C °F 80 176 | |
|---|---|---|---|---|---|---|---|

# AZOL GAS ART 750

*Special Applications*

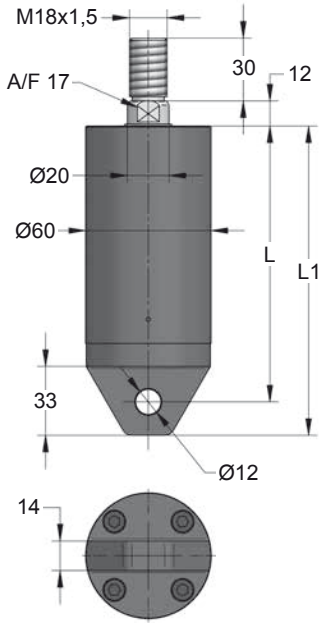


| ORDER | S (mm) | L1 ±0,25 (mm) | L (mm) | Kg. |
|---|---|---|---|---|
| ART 750 015 | 15 | 148 | 132 | 2.32 |
| ART 750 025 | 25 | 168 | 152 | 2.52 |
| ART 750 038 | 38 | 194 | 178 | 2.77 |
| ART 750 050 | 50 | 218 | 202 | 3.00 |
| ART 750 080 | 80 | 278 | 262 | 3.59 |
| ART 750 100 | 100 | 318 | 302 | 3.98 |
| ART 750 125 | 125 | 368 | 352 | 4.47 |
| ART 750 160 | 160 | 438 | 422 | 5.16 |

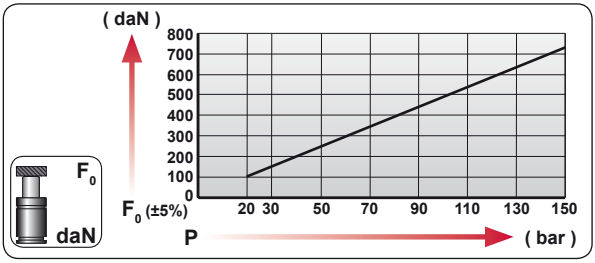


| CODE | bar | psi | F0 daN | F1 daN |
|---|---|---|---|---|
| ART 750 050 | 150 | 2175 | 735 | 1010 |
| --------- | --- | --- | --- | --- |

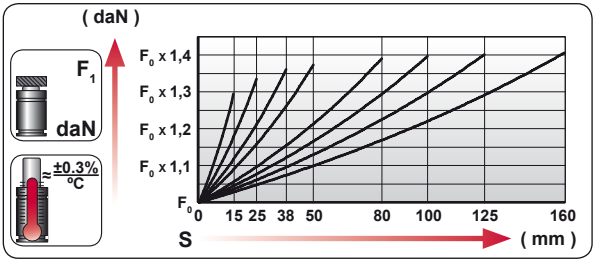


| | |
|---|---|
| ENG | ORDER |
| DEU | BESTELLUNG |
| FRA | COMMANDE |
| ITA | ORDINE |
| ESP | PEDIDO |
| POR | PEDIDO |

F0 daN — S mm

ART 750 50

ART 750 050

SEAL KIT XXXXXXX-S

CARTRIDGE KIT XXXXXXX-C

**KIT XXXXXXX-S**

**KIT XXXXXXX-C**

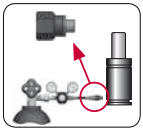

**18 GA 5**

| | | |
|---|---|---|
| ENG | REPAIR KIT | CHARGING ADAPTER |
| DEU | ERSATZ | LADEADAPTER |
| FRA | KIT DE RÉPARATION | RACCORD DE CHARGE |
| ITA | KIT DI MANUTENZIONE | ADATTATORE DI CARICO |
| ESP | KIT DE REPARACION | ADAPTADOR DE CARGA |
| POR | KIT DE MANUTENÇÃO | ADAPTADOR DE CARGA |

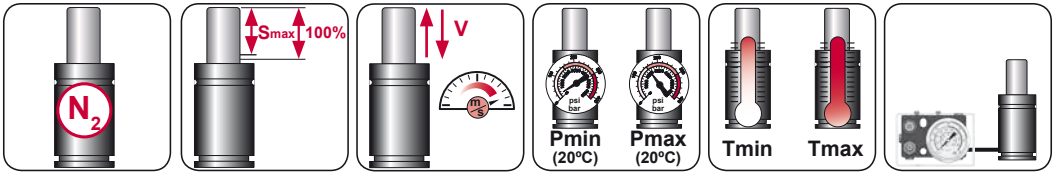


| $N_2$ | Smax < 90% | Vmax 0,5 m/s | bar psi 20 290 | bar psi 150 2175 | °C °F 0 32 | °C °F 80 176 | |
|---|---|---|---|---|---|---|---|

# ART 1200

*Special Applications*

AZOL GAS

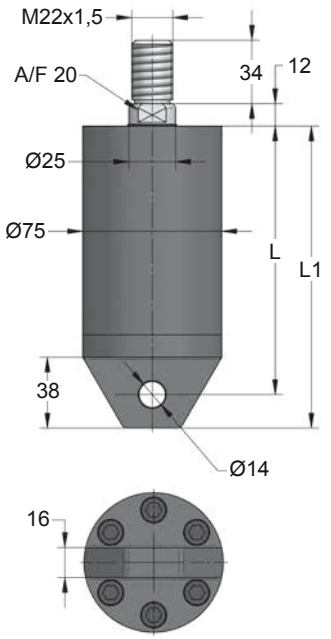


| ORDER | S (mm) | L1 ±0,25 (mm) | L (mm) | Kg. |
|---|---|---|---|---|
| ART 1200 015 | 15 | 162 | 144 | 4.01 |
| ART 1200 025 | 25 | 182 | 164 | 4.33 |
| ART 1200 038 | 38 | 208 | 190 | 4.74 |
| ART 1200 050 | 50 | 232 | 214 | 5.12 |
| ART 1200 080 | 80 | 292 | 274 | 6.06 |
| ART 1200 100 | 100 | 332 | 314 | 6.69 |
| ART 1200 125 | 125 | 382 | 364 | 7.48 |
| ART 1200 160 | 160 | 452 | 434 | 8.58 |

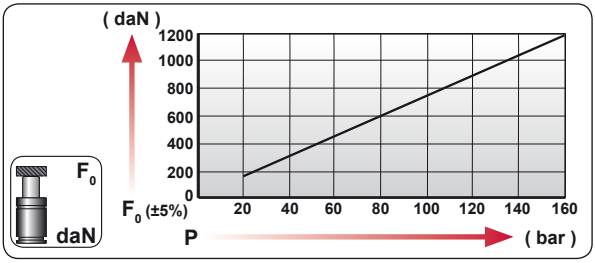


| CODE | bar | psi | $F_0$ daN | $F_1$ daN |
|---|---|---|---|---|
| ART 1200 050 | 160 | 2320 | 1200 | 1640 |
| --------- | --- | --- | --- | --- |

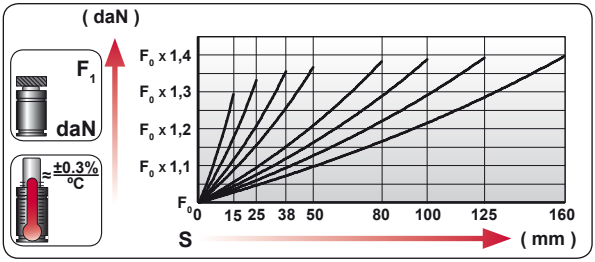


| | |
|---|---|
| ENG | ORDER |
| DEU | BESTELLUNG |
| FRA | COMMANDE |
| ITA | ORDINE |
| ESP | PEDIDO |
| POR | PEDIDO |

$F_0$ daN — S mm

ART 1200 50

ART 1200 050

SEAL KIT XXXXXXX-S

CARTRIDGE KIT XXXXXXX-C

KIT XXXXXXX-S

KIT XXXXXXX-C

18 GA 5

| | | |
|---|---|---|
| ENG | REPAIR KIT | CHARGING ADAPTER |
| DEU | ERSATZ | LADEADAPTER |
| FRA | KIT DE RÉPARATION | RACCORD DE CHARGE |
| ITA | KIT DI MANUTENZIONE | ADATTATORE DI CARICO |
| ESP | KIT DE REPARACION | ADAPTADOR DE CARGA |
| POR | KIT DE MANUTENÇÃO | ADAPTADOR DE CARGA |

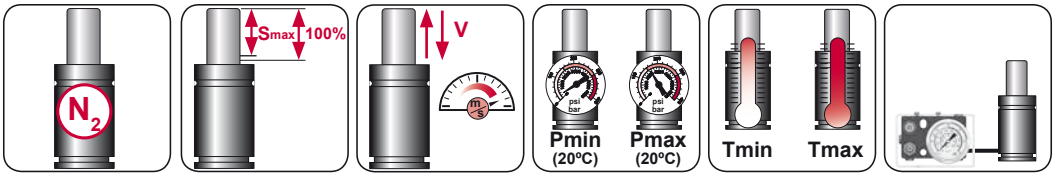


| $N_2$ | Smax < 90% | Vmax 0,5 m/s | bar psi 20 290 | bar psi 160 2320 | °C °F 0 32 | °C °F 80 176 |
|---|---|---|---|---|---|---|

# AZOL GAS ART 1500

*Special Applications*

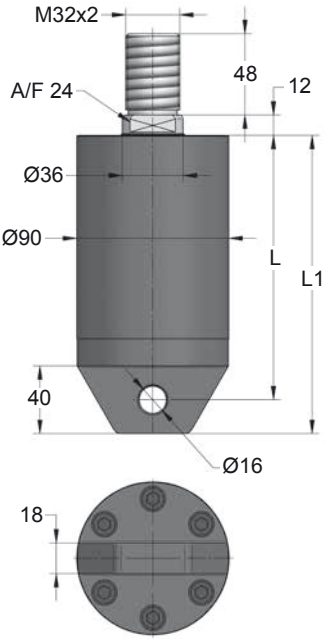


| ORDER | S (mm) | L1 ±0,25 (mm) | L (mm) | Kg. |
|---|---|---|---|---|
| ART 1500 015 | 15 | 176 | 156 | 6.56 |
| ART 1500 025 | 25 | 196 | 176 | 7.02 |
| ART 1500 038 | 38 | 222 | 202 | 7.63 |
| ART 1500 050 | 50 | 246 | 226 | 8.19 |
| ART 1500 080 | 80 | 306 | 286 | 9.58 |
| ART 1500 100 | 100 | 346 | 326 | 10.51 |
| ART 1500 125 | 125 | 396 | 376 | 11.68 |
| ART 1500 160 | 160 | 466 | 446 | 13.30 |

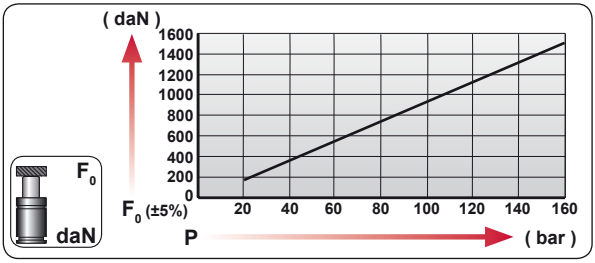


| CODE | bar | psi | $F_0$ daN | $F_1$ daN |
|---|---|---|---|---|
| ART 1500 050 | 160 | 2320 | 1500 | 2010 |
| --------- | --- | --- | --- | --- |

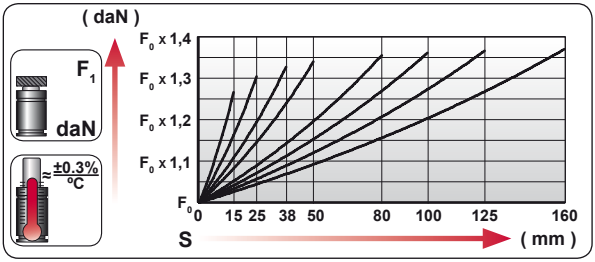


| | |
|---|---|
| ENG | ORDER |
| DEU | BESTELLUNG |
| FRA | COMMANDE |
| ITA | ORDINE |
| ESP | PEDIDO |
| POR | PEDIDO |

$F_0$ daN — S mm

ART 1500 50

ART 1500 050




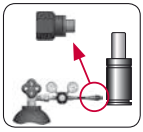

18 GA 5

| | | |
|---|---|---|
| ENG | REPAIR KIT | CHARGING ADAPTER |
| DEU | ERSATZ | LADEADAPTER |
| FRA | KIT DE RÉPARATION | RACCORD DE CHARGE |
| ITA | KIT DI MANUTENZIONE | ADATTATORE DI CARICO |
| ESP | KIT DE REPARACION | ADAPTADOR DE CARGA |
| POR | KIT DE MANUTENÇÃO | ADAPTADOR DE CARGA |

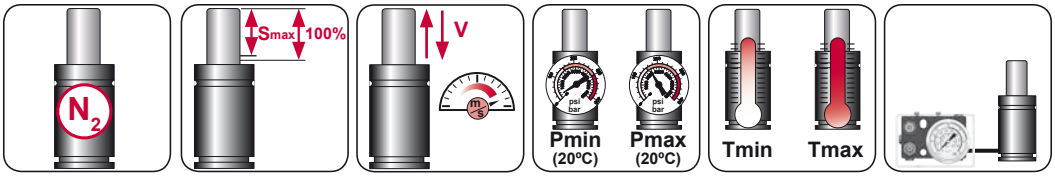


| $N_2$ | Smax < 90% | Vmax 0,5 m/s | bar psi 20 290 | bar psi 160 2320 | °C °F 0 32 | °C °F 80 176 | |
|---|---|---|---|---|---|---|---|

AZOL GAS

# VAM SPEED CONTROL

| MODEL | $F_0$ | Ø | S | L1 | Pmax | Charge Port | | |
|---|---|---|---|---|---|---|---|---|
| VAM 300 V1 | 300 | Ø45 | 25 - 100 | 135 - 285 | 150 | G1/8" | ✓ | ✓ |
| VAM 750 | 750 | Ø75 | 25 - 125 | 160 - 360 | 75 | G1/8" | ✓ | ✓ |
| VAM 1500 | 1500 | Ø95 | 25 - 125 | 170 - 370 | 75 | G1/8" | ✓ | ✓ |
| VAM 3000 | 3000 | Ø120 | 25 - 125 | 190 - 390 | 90 | G1/8" | ✓ | ✓ |
| VAM 5000 | 5000 | Ø150 | 25 - 125 | 205 - 405 | 100 | G1/8" | ✓ | ✓ |
| VAM 7500 | 7500 | Ø195 | 25 - 125 | 210 - 410 | 105 | G1/8" | ✓ | ✓ |



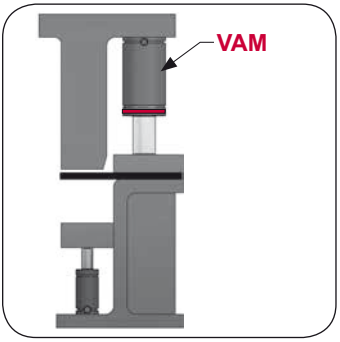


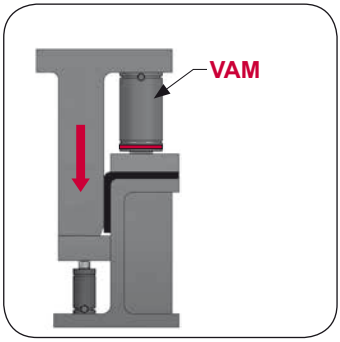


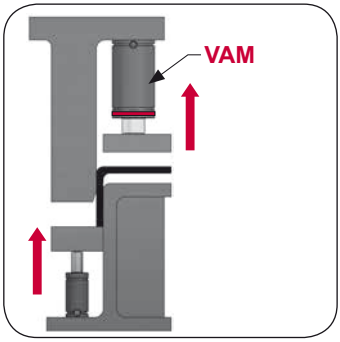

# VAM 300 V1

*Speed Control*

AZOL GAS

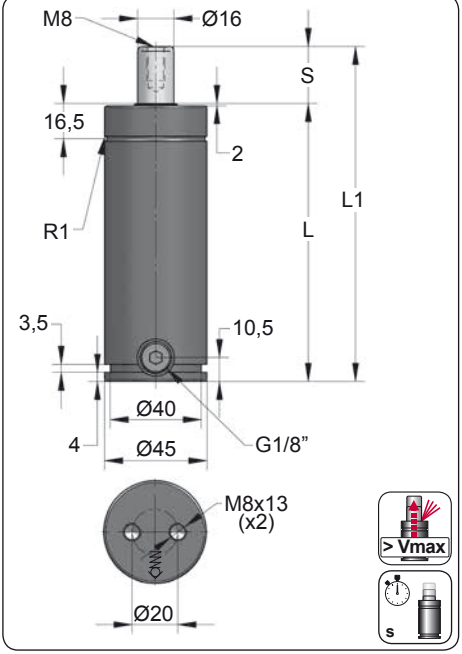


| ORDER | S (mm) | L1 ±0,25 (mm) | L (mm) | Kg. |
|---|---|---|---|---|
| VAM 300 025 V1 | 25 | 135 | 110 | 1.12 |
| VAM 300 038 V1 | 38 | 161 | 123 | 1.20 |
| VAM 300 050 V1 | 50 | 185 | 135 | 1.27 |
| VAM 300 063 V1 | 63.5 | 212 | 148.5 | 1.35 |
| VAM 300 080 V1 | 80 | 245 | 165 | 1.45 |
| VAM 300 100 V1 | 100 | 285 | 185 | 1.57 |

$t_{max} = k \times S_U$

| | k |
|---|---|
| VAM 300 V1 | 0.015 |

Max. delay time ($t_{max}$)
Constant (k)
Stroke used ($S_U$)

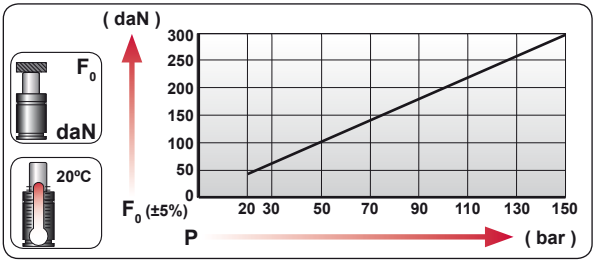


| CODE | bar | psi | $F_0$ daN | $F_1$ daN |
|---|---|---|---|---|
| VAM 300 V1 | 150 | 2175 | 300 | 350 |

-Slight initial return back depends on the stroke used.

-Return at constant slowed speed.

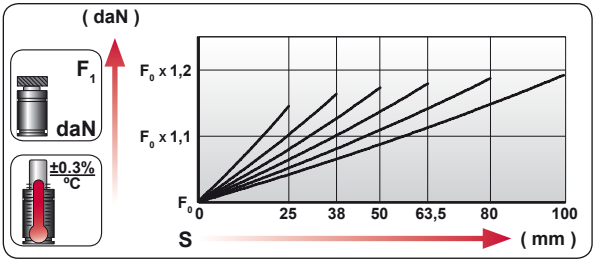


| | |
|---|---|
| ENG | ORDER |
| DEU | BESTELLUNG |
| FRA | COMMANDE |
| ITA | ORDINE |
| ESP | PEDIDO |
| POR | PEDIDO |

$F_0$ daN — S mm

VAM 300 50

VAM 300 050 V1

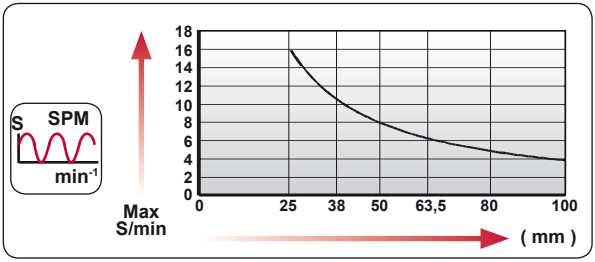


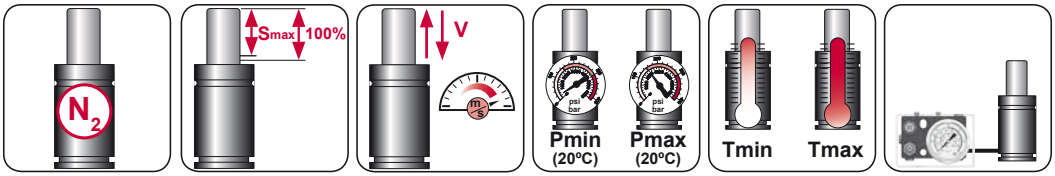


| $N_2$ | Smax < 90% | Vmax 0,5 m/s | bar psi 20 290 | bar psi 150 2175 | ºC ºF 0 32 | ºC ºF 80 176 | 600 CP- |
|---|---|---|---|---|---|---|---|

AZOL GAS

# VAM 300 V1

*Speed Control*

## CONVENTIONAL

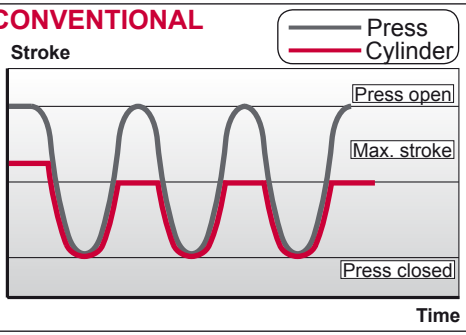


## VAM

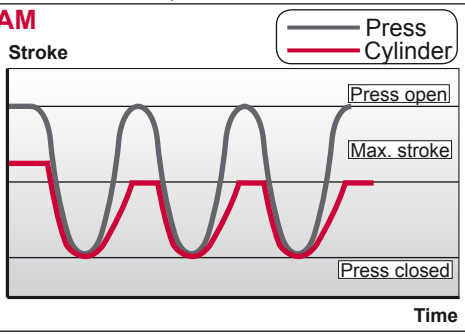


## DATA REQUIRED




- Desired force **( daN )**:.....




- Total stroke **( mm )**:.....




- Stroke used **( mm )**:.....




- Number of cycles per minute:.....




- Desired delay time **( eg. 1 segundo)**:.....








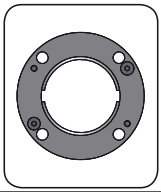

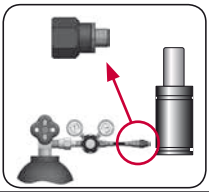

| CODE | | VAM 300 050 V1 | KIT XXXXXXX-S<br>KIT XXXXXXX-C | A14-045 | 18 GA 5 |
|---|---|---|---|---|---|
| ENG | ORDER | GAS SPRING | REPAIR KIT | FLANGE | CHARGING ADAPTER |
| DEU | BESTELLUNG | GASDRUCKFEDER | ERSATZTEILSATZ | FLANSCHE | LADEADAPTER |
| FRA | COMMANDE | RESSORT À GAZ | KIT DE RÉPARATION | BRIDE | RACCORD DE CHARGE |
| ITA | ORDINE | CILINDRO AD AZOTO | KIT DI MANUTENZIONE | FLANGE | ADATTATORE DI CARICO |
| ESP | PEDIDO | RESORTE DE GAS | KIT DE REPARACION | BRIDA | ADAPTADOR DE CARGA |
| POR | PEDIDO | CILINDRO DE GÁS | KIT DE MANUTENÇÃO | FLANGE | ADAPTADOR DE CARGA |

# VAM 300 V1 *MOUNTS*

*Speed Control*

AZOL GAS

## A14-045

ISO E24.54.815.G EM24.54.700/F

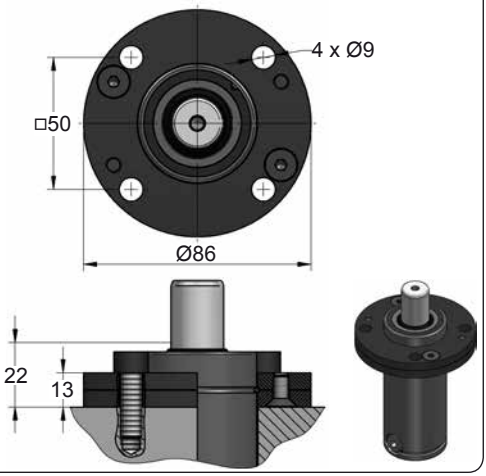


## A34-045

ISO VDI

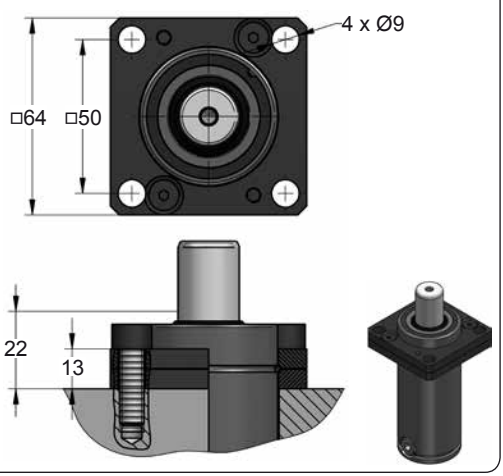


## B21-045

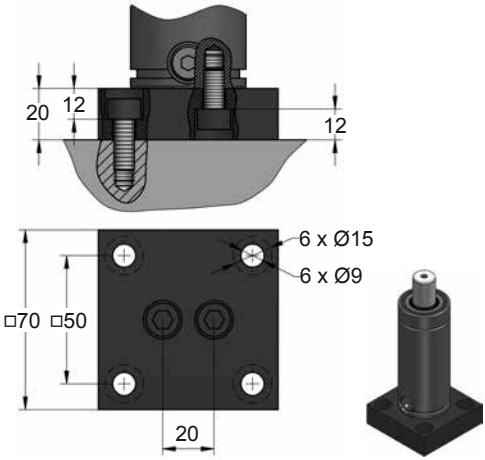


## B76-045

ISO E24.54.815.G

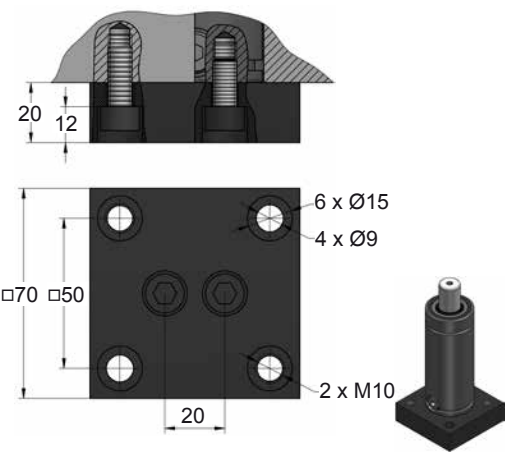









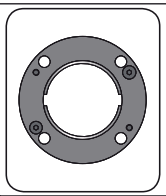

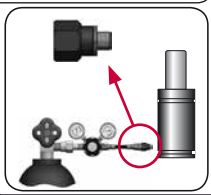

| CODE | | VAM 300 050 V1 | KIT XXXXXXX-S<br>KIT XXXXXXX-C | A14-045 | 18 GA 5 |
|---|---|---|---|---|---|
| ENG | ORDER | GAS SPRING | REPAIR KIT | FLANGE | CHARGING ADAPTER |
| DEU | BESTELLUNG | GASDRUCKFEDER | ERSATZTEILSATZ | FLANSCHE | LADEADAPTER |
| FRA | COMMANDE | RESSORT À GAZ | KIT DE RÉPARATION | BRIDE | RACCORD DE CHARGE |
| ITA | ORDINE | CILINDRO AD AZOTO | KIT DI MANUTENZIONE | FLANGE | ADATTATORE DI CARICO |
| ESP | PEDIDO | RESORTE DE GAS | KIT DE REPARACION | BRIDA | ADAPTADOR DE CARGA |
| POR | PEDIDO | CILINDRO DE GÁS | KIT DE MANUTENÇÃO | FLANGE | ADAPTADOR DE CARGA |

AZOL GAS

# VAM 300 V1 *MOUNTS*

*Speed Control*

## C05-045

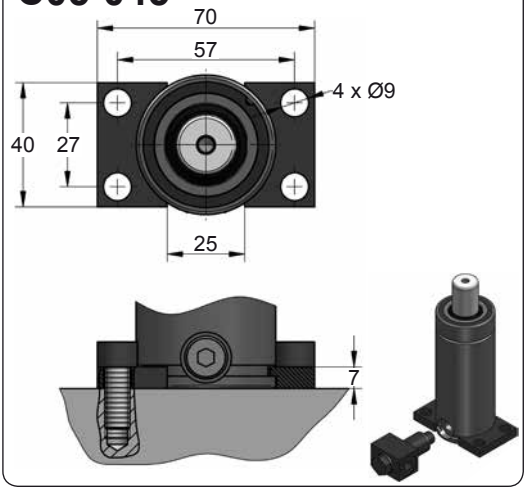


## C20-045

ISO VDI E24.54.815.G EM24.54.700/F

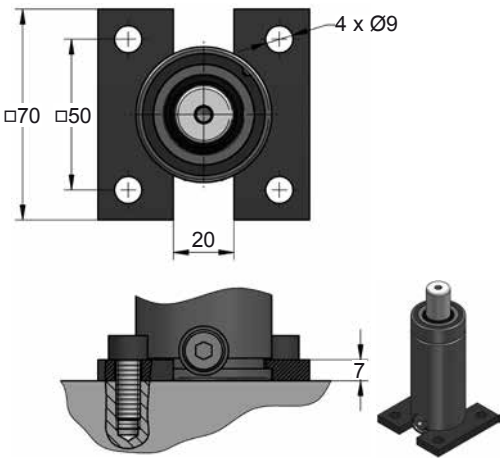


## D02-045

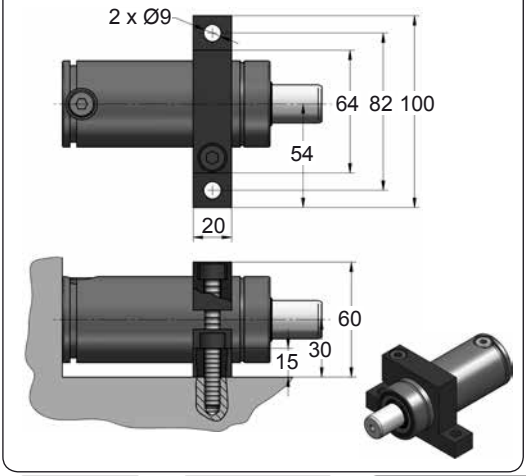


## D67-045

VDI

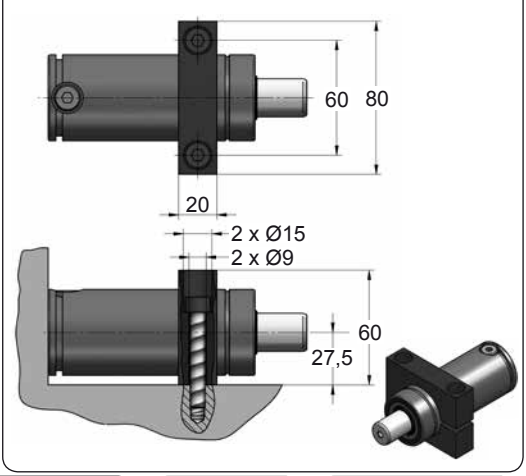









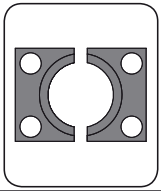

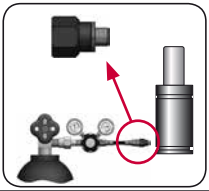

| CODE | | VAM 300 050 V1 | KIT XXXXXXX-S<br>KIT XXXXXXX-C | C05-045 | 18 GA 5 |
|---|---|---|---|---|---|
| ENG | ORDER | GAS SPRING | REPAIR KIT | FLANGE | CHARGING ADAPTER |
| DEU | BESTELLUNG | GASDRUCKFEDER | ERSATZTEILSATZ | FLANSCHE | LADEADAPTER |
| FRA | COMMANDE | RESSORT À GAZ | KIT DE RÉPARATION | BRIDE | RACCORD DE CHARGE |
| ITA | ORDINE | CILINDRO AD AZOTO | KIT DI MANUTENZIONE | FLANGE | ADATTATORE DI CARICO |
| ESP | PEDIDO | RESORTE DE GAS | KIT DE REPARACION | BRIDA | ADAPTADOR DE CARGA |
| POR | PEDIDO | CILINDRO DE GÁS | KIT DE MANUTENÇÃO | FLANGE | ADAPTADOR DE CARGA |

# VAM 750

Speed Control

AZOL GAS

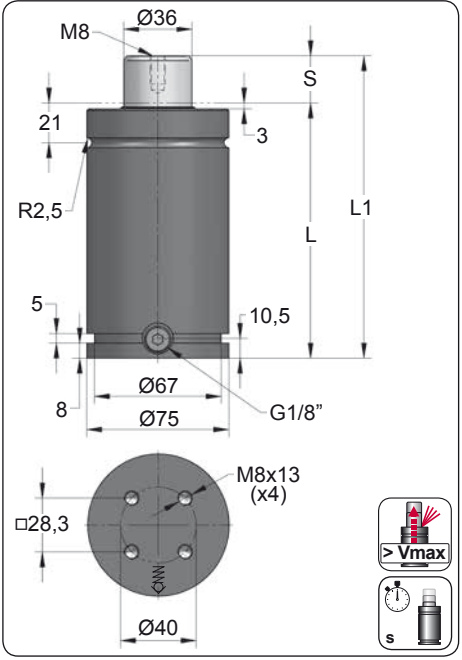


| ORDER | S (mm) | L1 ±0,25 (mm) | L (mm) | Kg. |
|---|---|---|---|---|
| VAM 750 025 | 25 | 160 | 135 | 3.47 |
| VAM 750 038 | 38 | 186 | 148 | 3.71 |
| VAM 750 050 | 50 | 210 | 160 | 3.92 |
| VAM 750 063 | 63.5 | 237 | 173.5 | 4.17 |
| VAM 750 080 | 80 | 270 | 190 | 4.46 |
| VAM 750 100 | 100 | 310 | 210 | 4.82 |
| VAM 750 125 | 125 | 360 | 235 | 5.27 |

$t_{max} = k \times S_U$

| | k |
|---|---|
| VAM 750 | 0.062 |

Max. delay time ($t_{max}$)
Constant (k)
Stroke used ($S_U$)

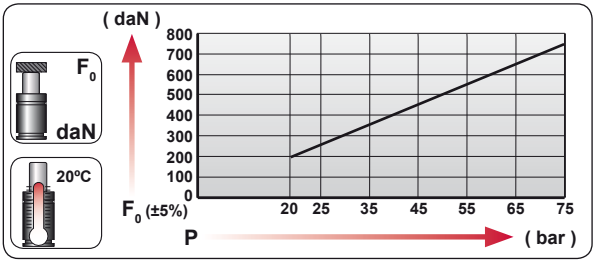


| CODE | bar | psi | $F_0$ daN | $F_1$ daN |
|---|---|---|---|---|
| VAM 750 | 75 | 1088 | 760 | 1010 |

-Slight initial return back depends on the stroke used.

-Return at constant slowed speed.

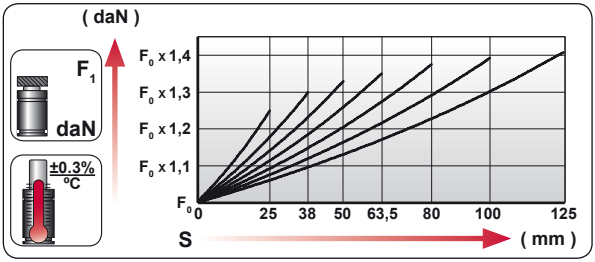


| | |
|---|---|
| ENG | ORDER |
| DEU | BESTELLUNG |
| FRA | COMMANDE |
| ITA | ORDINE |
| ESP | PEDIDO |
| POR | PEDIDO |

$F_0$ daN — S mm

VAM 750 50

VAM 750 050

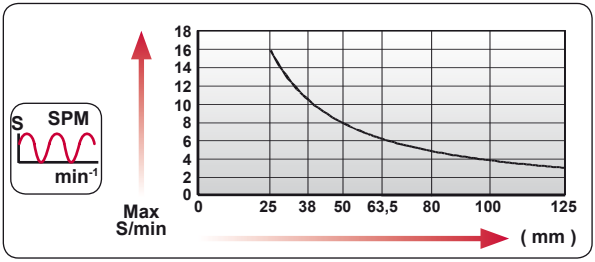


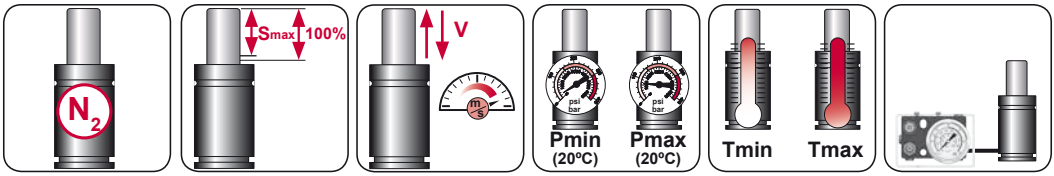


| $N_2$ | Smax < 90% | Vmax 0,5 m/s | bar psi 20 290 | bar psi 75 1088 | ºC ºF 0 32 | ºC ºF 80 176 | 600 CP- |
|---|---|---|---|---|---|---|---|

AZOL GAS

# VAM 750

Speed Control

## CONVENTIONAL

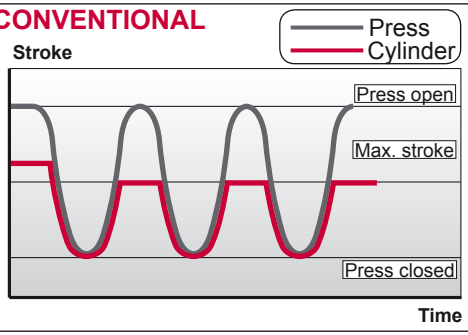


## VAM

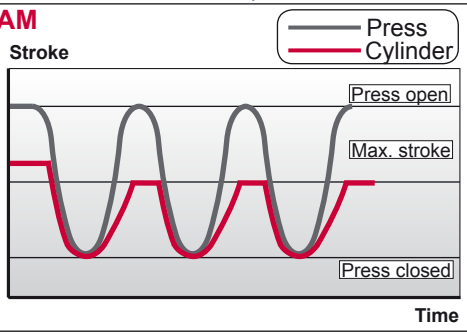


## DATA REQUIRED




- Desired force **( daN )**:.....




- Total stroke **( mm )**:.....




- Stroke used **( mm )**:.....




- Number of cycles per minute:.....




- Desired delay time **( eg. 1 segundo)**:.....








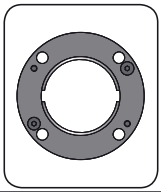

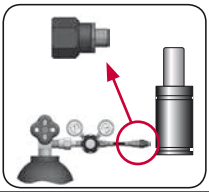

| CODE | | VAM 750 050 | KIT XXXXXXX-S<br>KIT XXXXXXX-C | A14-075 | 18 GA 5 |
|---|---|---|---|---|---|
| ENG | ORDER | GAS SPRING | REPAIR KIT | FLANGE | CHARGING ADAPTER |
| DEU | BESTELLUNG | GASDRUCKFEDER | ERSATZTEILSATZ | FLANSCHE | LADEADAPTER |
| FRA | COMMANDE | RESSORT À GAZ | KIT DE RÉPARATION | BRIDE | RACCORD DE CHARGE |
| ITA | ORDINE | CILINDRO AD AZOTO | KIT DI MANUTENZIONE | FLANGE | ADATTATORE DI CARICO |
| ESP | PEDIDO | RESORTE DE GAS | KIT DE REPARACION | BRIDA | ADAPTADOR DE CARGA |
| POR | PEDIDO | CILINDRO DE GÁS | KIT DE MANUTENÇÃO | FLANGE | ADAPTADOR DE CARGA |

# VAM 750 MOUNTS

Speed Control

AZOL GAS

## A14-075

ISO · E24.54.815.G · EM24.54.700/F

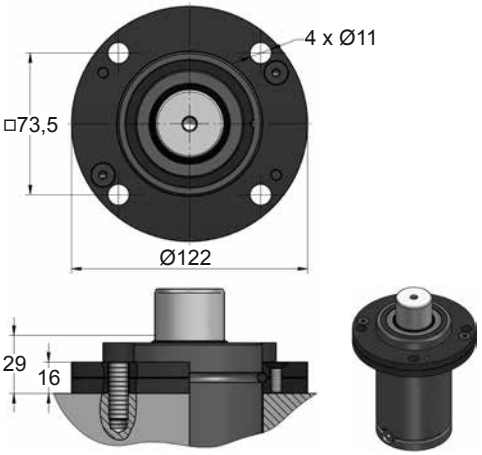


## A34-075

ISO · VDI

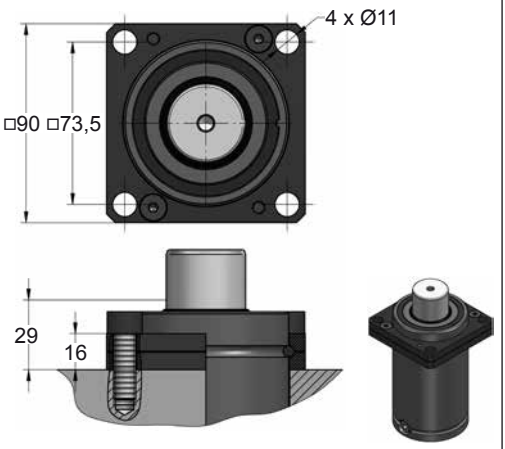


## B21-075

EM24.54.700/F

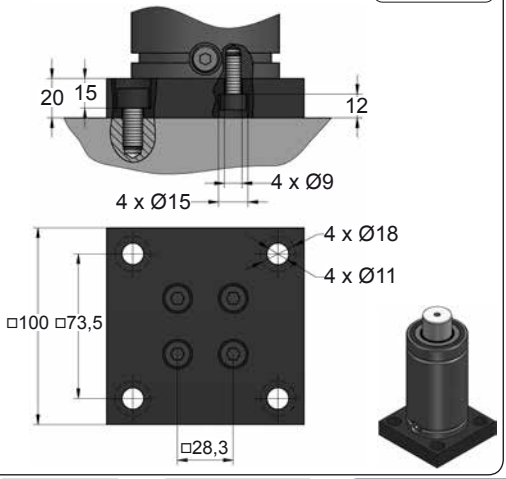


## B76-075

ISO · E24.54.815.G · EM24.54.700/F

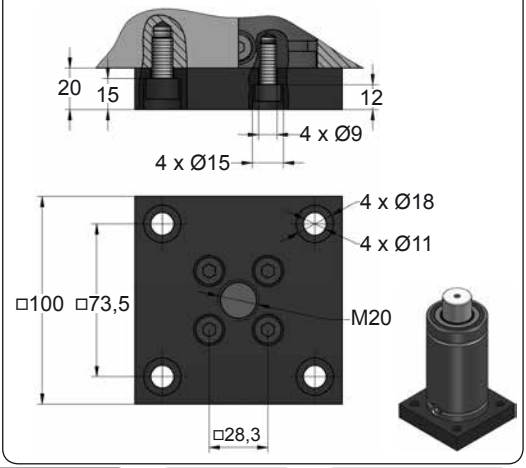









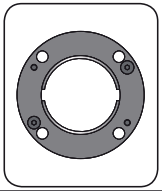

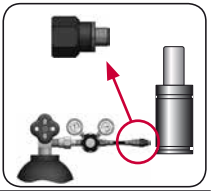

| CODE | | VAM 750 050 | KIT XXXXXXX-S<br>KIT XXXXXXX-C | A14-075 | 18 GA 5 |
|---|---|---|---|---|---|
| ENG | ORDER | GAS SPRING | REPAIR KIT | FLANGE | CHARGING ADAPTER |
| DEU | BESTELLUNG | GASDRUCKFEDER | ERSATZTEILSATZ | FLANSCHE | LADEADAPTER |
| FRA | COMMANDE | RESSORT À GAZ | KIT DE RÉPARATION | BRIDE | RACCORD DE CHARGE |
| ITA | ORDINE | CILINDRO AD AZOTO | KIT DI MANUTENZIONE | FLANGE | ADATTATORE DI CARICO |
| ESP | PEDIDO | RESORTE DE GAS | KIT DE REPARACION | BRIDA | ADAPTADOR DE CARGA |
| POR | PEDIDO | CILINDRO DE GÁS | KIT DE MANUTENÇÃO | FLANGE | ADAPTADOR DE CARGA |

AZOL GAS

# VAM 750 MOUNTS

Speed Control

## C05-075

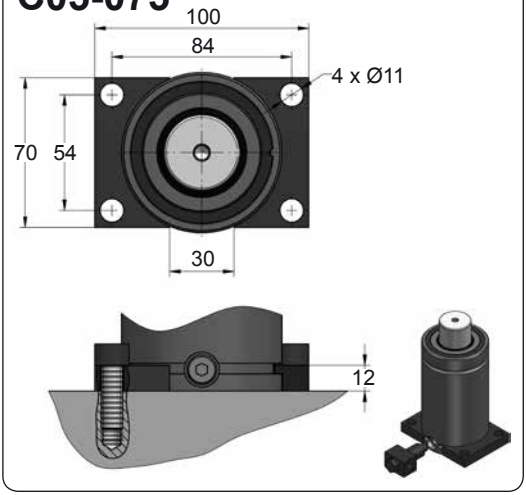


## C20-075

ISO VDI E24.54.815.G EM24.54.700/F

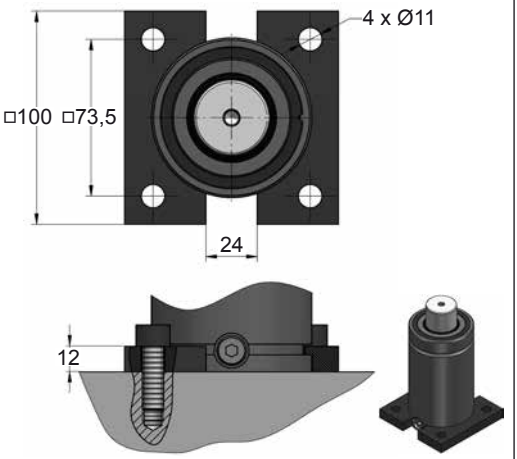


## D02-075

ISO E24.54.815.G EM24.54.700/F

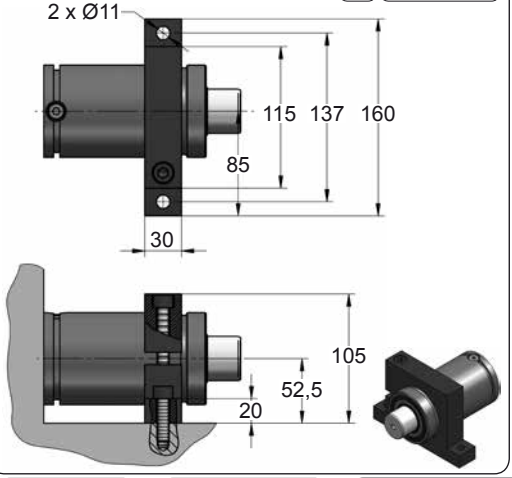


## D67-075

VDI

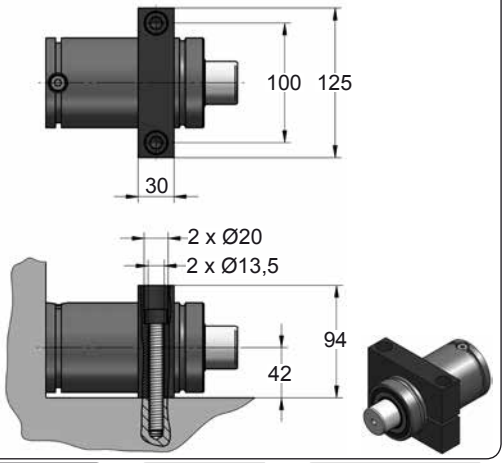









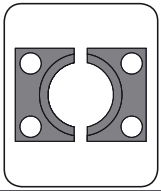

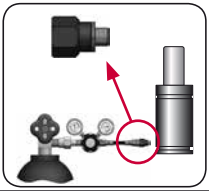

| CODE | | VAM 750 050 | KIT XXXXXXX-S<br>KIT XXXXXXX-C | C05-075 | 18 GA 5 |
|---|---|---|---|---|---|
| ENG | ORDER | GAS SPRING | REPAIR KIT | FLANGE | CHARGING ADAPTER |
| DEU | BESTELLUNG | GASDRUCKFEDER | ERSATZTEILSATZ | FLANSCHE | LADEADAPTER |
| FRA | COMMANDE | RESSORT À GAZ | KIT DE RÉPARATION | BRIDE | RACCORD DE CHARGE |
| ITA | ORDINE | CILINDRO AD AZOTO | KIT DI MANUTENZIONE | FLANGE | ADATTATORE DI CARICO |
| ESP | PEDIDO | RESORTE DE GAS | KIT DE REPARACION | BRIDA | ADAPTADOR DE CARGA |
| POR | PEDIDO | CILINDRO DE GÁS | KIT DE MANUTENÇÃO | FLANGE | ADAPTADOR DE CARGA |

# VAM 1500

*Speed Control*

AZOL GAS

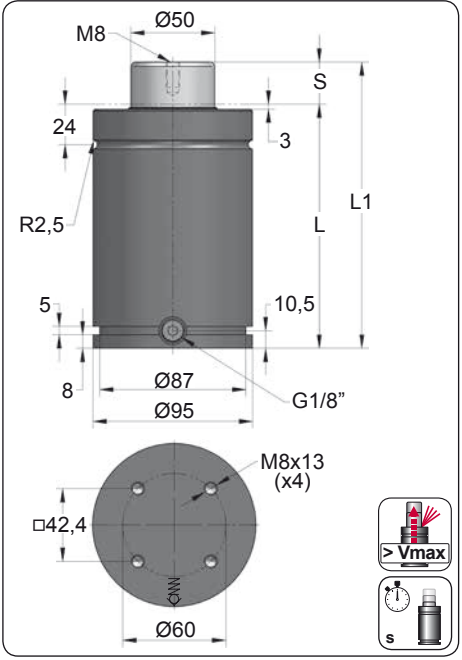


| ORDER | S (mm) | L1 ±0,25 (mm) | L (mm) | Kg. |
|---|---|---|---|---|
| VAM 1500 012 | 12.7 | 145.4 | 132.7 | 5.75 |
| VAM 1500 025 | 25 | 170 | 145 | 6.13 |
| VAM 1500 038 | 38 | 196 | 158 | 6.54 |
| VAM 1500 050 | 50 | 220 | 170 | 6.91 |
| VAM 1500 063 | 63.5 | 247 | 183.5 | 7.33 |
| VAM 1500 080 | 80 | 280 | 200 | 7.84 |
| VAM 1500 100 | 100 | 320 | 220 | 8.46 |
| VAM 1500 125 | 125 | 370 | 245 | 9.23 |

$t_{max} = k \times S_U$

| | k |
|---|---|
| VAM 150 | 0.09 |

Max. delay time ($t_{max}$)
Constant (k)
Stroke used ($S_U$)

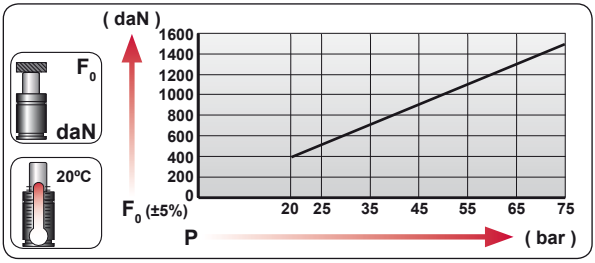


| CODE | bar | psi | $F_0$ daN | $F_1$ daN |
|---|---|---|---|---|
| VAM 1500 | 75 | 1088 | 1470 | 2000 |

-Slight initial return back depends on the stroke used.

-Return at constant slowed speed.

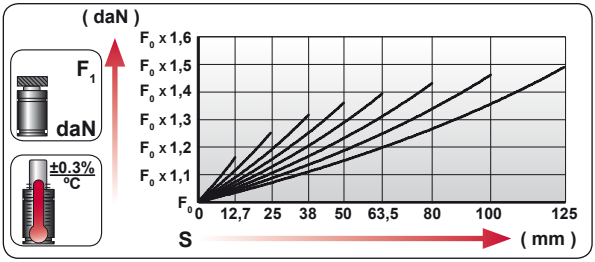


| ENG | ORDER |
|---|---|
| DEU | BESTELLUNG |
| FRA | COMMANDE |
| ITA | ORDINE |
| ESP | PEDIDO |
| POR | PEDIDO |

$F_0$ daN — S mm

VAM 1500 50

VAM 1500 050

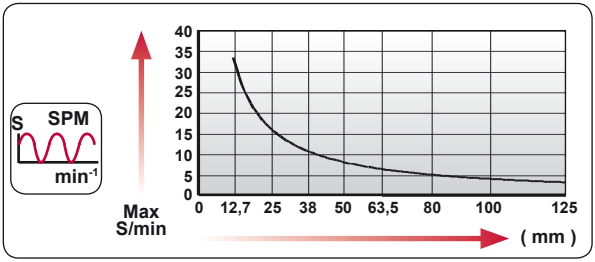


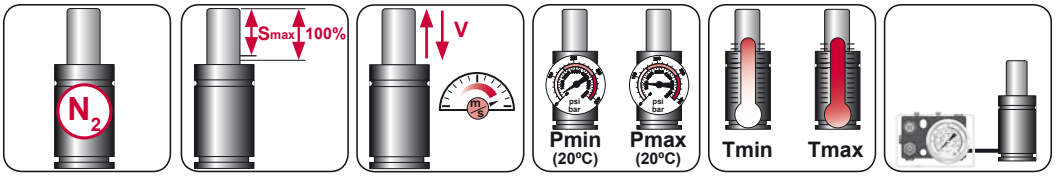


| $N_2$ | Smax < 90% | Vmax 0,5 m/s | bar psi 20 290 | bar psi 75 1088 | ºC ºF 0 32 | ºC ºF 80 176 | 600 CP- |
|---|---|---|---|---|---|---|---|

AZOL GAS

# VAM 1500

Speed Control

## CONVENTIONAL

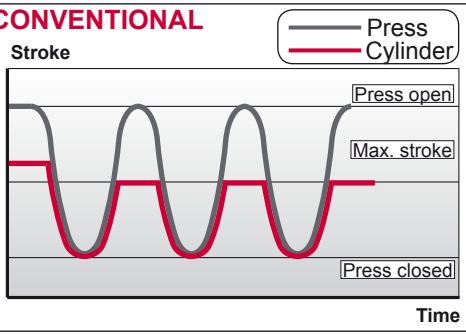


## VAM

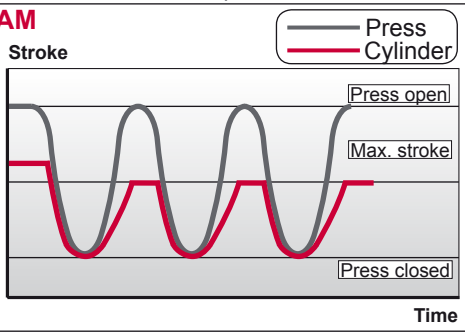


## DATA REQUIRED




- Desired force **( daN )**:.....




- Total stroke **( mm )**:.....




- Stroke used **( mm )**:.....




- Number of cycles per minute:.....




- Desired delay time **( eg. 1 segundo)**:.....








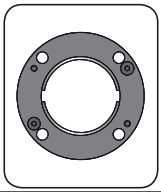

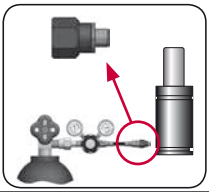

| CODE | | VAM 1500 050 | KIT XXXXXXX-S<br>KIT XXXXXXX-C | A14-095 | 18 GA 5 |
|---|---|---|---|---|---|
| ENG | ORDER | GAS SPRING | REPAIR KIT | FLANGE | CHARGING ADAPTER |
| DEU | BESTELLUNG | GASDRUCKFEDER | ERSATZTEILSATZ | FLANSCHE | LADEADAPTER |
| FRA | COMMANDE | RESSORT À GAZ | KIT DE RÉPARATION | BRIDE | RACCORD DE CHARGE |
| ITA | ORDINE | CILINDRO AD AZOTO | KIT DI MANUTENZIONE | FLANGE | ADATTATORE DI CARICO |
| ESP | PEDIDO | RESORTE DE GAS | KIT DE REPARACION | BRIDA | ADAPTADOR DE CARGA |
| POR | PEDIDO | CILINDRO DE GÁS | KIT DE MANUTENÇÃO | FLANGE | ADAPTADOR DE CARGA |

# VAM 1500 MOUNTS

Speed Control

AZOL GAS

## A14-095

ISO NAAMS E24.54.815.G EM24.54.700/F

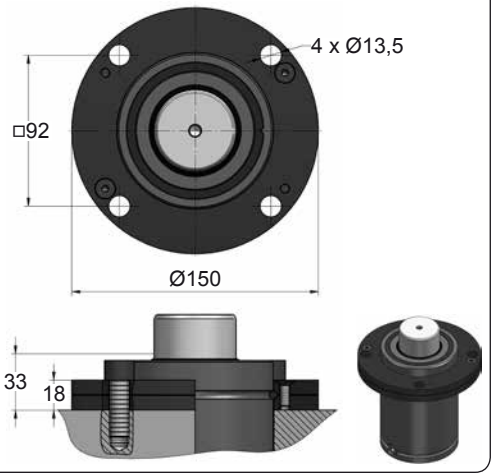


## A34-095

ISO VDI

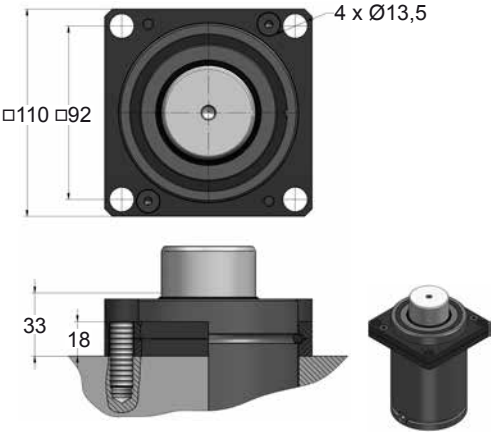


## B21-095

EM24.54.700/F

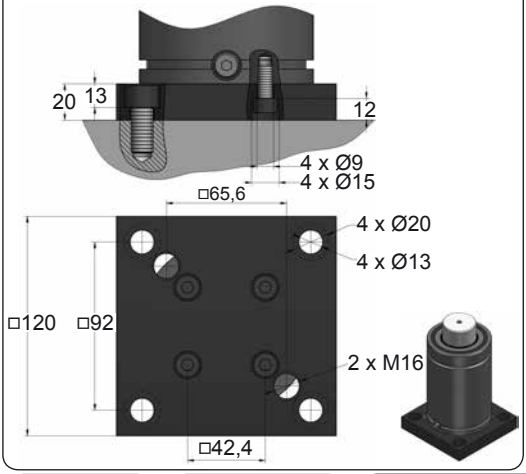


## B76-095

ISO NAAMS EM24.54.700/F

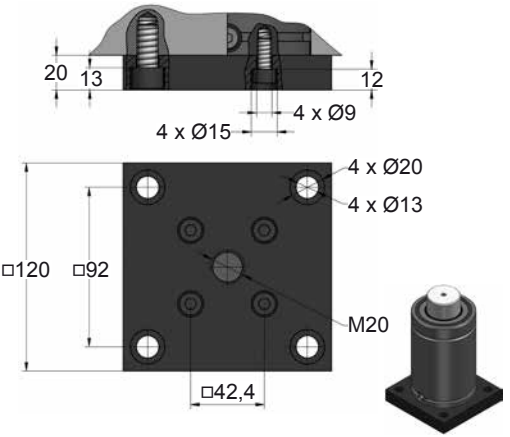









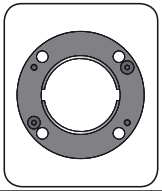

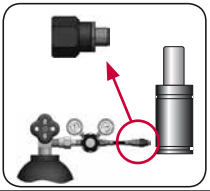

| CODE | | VAM 1500 050 | KIT XXXXXXX-S<br>KIT XXXXXXX-C | A14-095 | 18 GA 5 |
|---|---|---|---|---|---|
| ENG | ORDER | GAS SPRING | REPAIR KIT | FLANGE | CHARGING ADAPTER |
| DEU | BESTELLUNG | GASDRUCKFEDER | ERSATZTEILSATZ | FLANSCHE | LADEADAPTER |
| FRA | COMMANDE | RESSORT À GAZ | KIT DE RÉPARATION | BRIDE | RACCORD DE CHARGE |
| ITA | ORDINE | CILINDRO AD AZOTO | KIT DI MANUTENZIONE | FLANGE | ADATTATORE DI CARICO |
| ESP | PEDIDO | RESORTE DE GAS | KIT DE REPARACION | BRIDA | ADAPTADOR DE CARGA |
| POR | PEDIDO | CILINDRO DE GÁS | KIT DE MANUTENÇÃO | FLANGE | ADAPTADOR DE CARGA |

AZOL GAS

# VAM 1500 MOUNTS

Speed Control

## C05-095

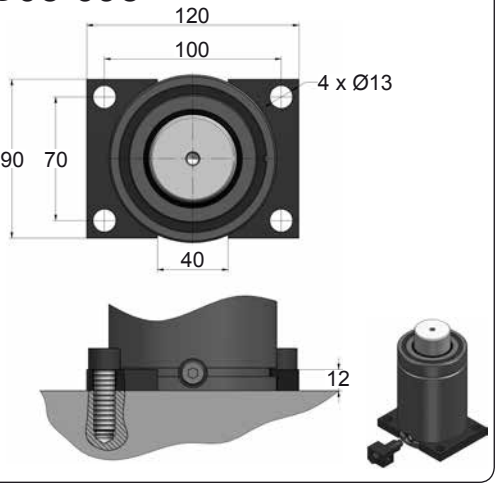


## C20-095

ISO · E24.54.815.G · EM24.54.700/F

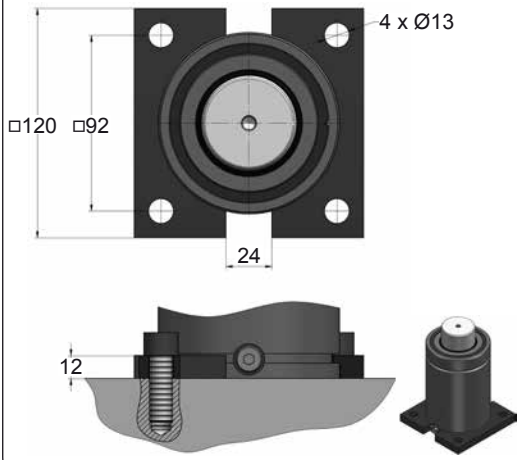


## D02-095

ISO · E24.54.815.G · EM24.54.700/F

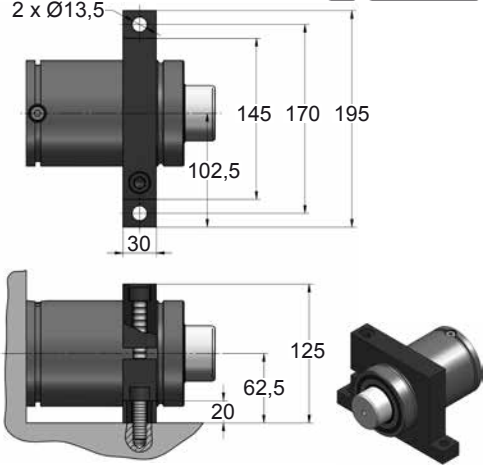


## D67-095

VDI

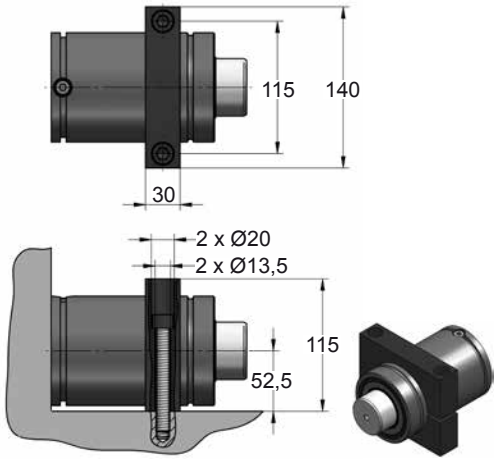









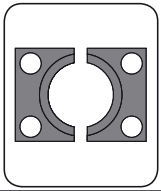

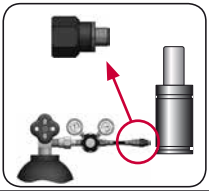

| CODE | | VAM 1500 050 | KIT XXXXXXX-S<br>KIT XXXXXXX-C | C05-095 | 18 GA 5 |
|---|---|---|---|---|---|
| ENG | ORDER | GAS SPRING | REPAIR KIT | FLANGE | CHARGING ADAPTER |
| DEU | BESTELLUNG | GASDRUCKFEDER | ERSATZTEILSATZ | FLANSCHE | LADEADAPTER |
| FRA | COMMANDE | RESSORT À GAZ | KIT DE RÉPARATION | BRIDE | RACCORD DE CHARGE |
| ITA | ORDINE | CILINDRO AD AZOTO | KIT DI MANUTENZIONE | FLANGE | ADATTATORE DI CARICO |
| ESP | PEDIDO | RESORTE DE GAS | KIT DE REPARACION | BRIDA | ADAPTADOR DE CARGA |
| POR | PEDIDO | CILINDRO DE GÁS | KIT DE MANUTENÇÃO | FLANGE | ADAPTADOR DE CARGA |

# VAM 3000

*Speed Control*

AZOL GAS

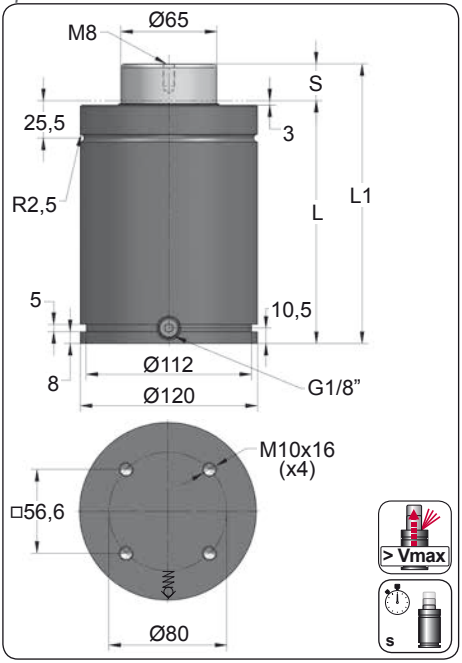


| ORDER | S (mm) | L1 ±0,25 (mm) | L (mm) | Kg. |
|---|---|---|---|---|
| VAM 3000 012 | 12.7 | 165.4 | 152.7 | 10.39 |
| VAM 3000 025 | 25 | 190 | 165 | 11.04 |
| VAM 3000 038 | 38 | 216 | 178 | 11.73 |
| VAM 3000 050 | 50 | 240 | 190 | 12.37 |
| VAM 3000 063 | 63.5 | 267 | 203.5 | 13.08 |
| VAM 3000 080 | 80 | 300 | 220 | 13.96 |
| VAM 3000 100 | 100 | 340 | 240 | 15.02 |
| VAM 3000 125 | 125 | 390 | 265 | 16.34 |

$t_{max} = k \times S_U$

| | k |
|---|---|
| VAM 3000 | 0.131 |

Max. delay time ($t_{max}$)
Constant (k)
Stroke used ($S_U$)

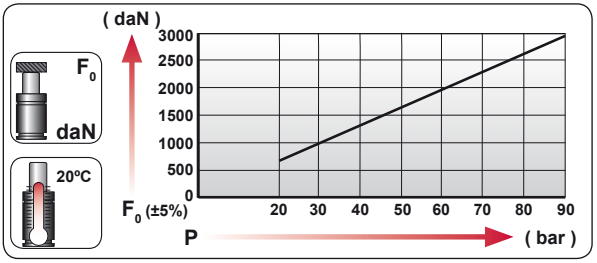


| CODE | bar | psi | $F_0$ daN | $F_1$ daN |
|---|---|---|---|---|
| VAM 3000 | 90 | 1305 | 2985 | 4080 |

-Slight initial return back depends on the stroke used.

-Return at constant slowed speed.

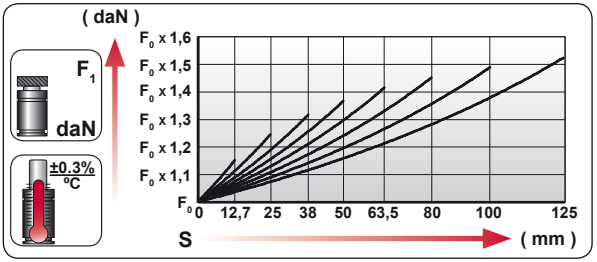


| ENG | ORDER |
|---|---|
| DEU | BESTELLUNG |
| FRA | COMMANDE |
| ITA | ORDINE |
| ESP | PEDIDO |
| POR | PEDIDO |

$F_0$ daN — S mm

VAM 3000 50

VAM 3000 050

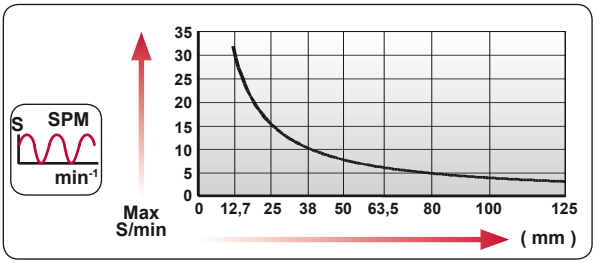


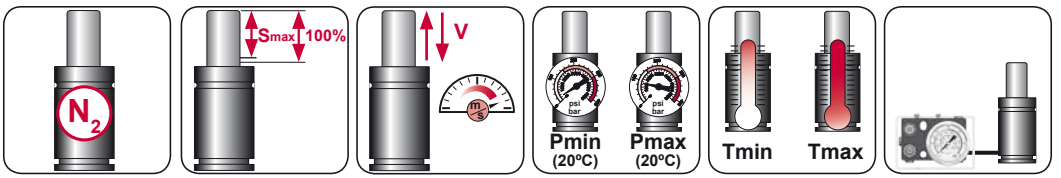


| $N_2$ | Smax < 90% | Vmax 0,5 m/s | bar psi 20 290 | bar psi 90 1305 | ºC ºF 0 32 | ºC ºF 80 176 | 600 CP- |
|---|---|---|---|---|---|---|---|

AZOL GAS

# VAM 3000

Speed Control

## CONVENTIONAL

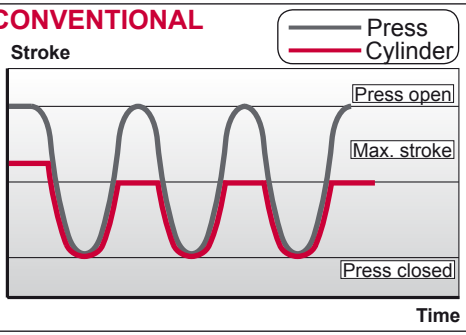


## VAM

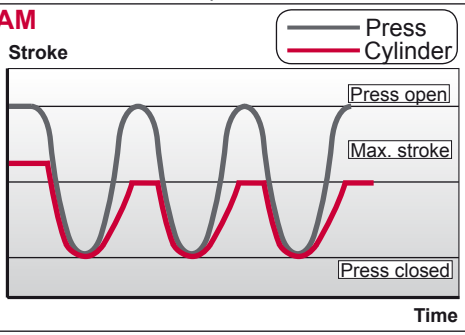


## DATA REQUIRED




- Desired force **( daN )**:.....




- Total stroke **( mm )**:.....




- Stroke used **( mm )**:.....




- Number of cycles per minute:.....




- Desired delay time **( eg. 1 segundo)**:.....








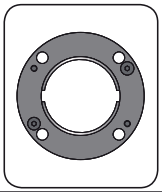

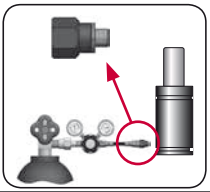

| CODE | | VAM 3000 050 | KIT XXXXXXX-S<br>KIT XXXXXXX-C | A14-120 | 18 GA 5 |
|---|---|---|---|---|---|
| ENG | ORDER | GAS SPRING | REPAIR KIT | FLANGE | CHARGING ADAPTER |
| DEU | BESTELLUNG | GASDRUCKFEDER | ERSATZTEILSATZ | FLANSCHE | LADEADAPTER |
| FRA | COMMANDE | RESSORT À GAZ | KIT DE RÉPARATION | BRIDE | RACCORD DE CHARGE |
| ITA | ORDINE | CILINDRO AD AZOTO | KIT DI MANUTENZIONE | FLANGE | ADATTATORE DI CARICO |
| ESP | PEDIDO | RESORTE DE GAS | KIT DE REPARACION | BRIDA | ADAPTADOR DE CARGA |
| POR | PEDIDO | CILINDRO DE GÁS | KIT DE MANUTENÇÃO | FLANGE | ADAPTADOR DE CARGA |

# VAM 3000 MOUNTS

Speed Control

AZOL GAS

## A14-120

E24.54.815.G
EM24.54.700/F

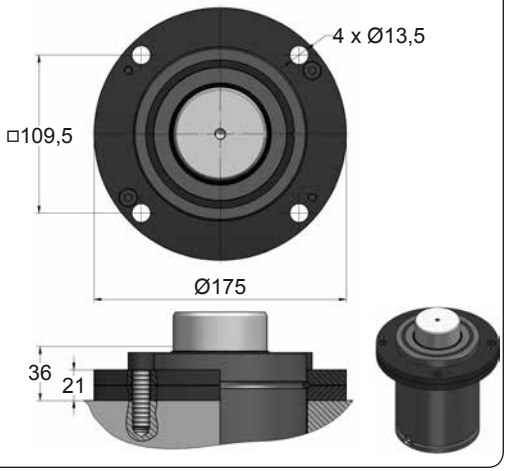


## A34-120

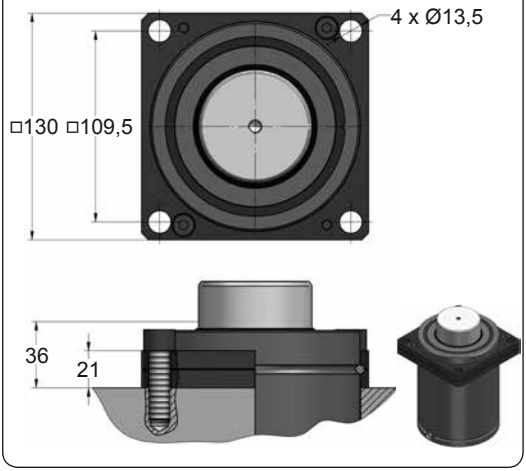


## B21-120

EM24.54.700/F

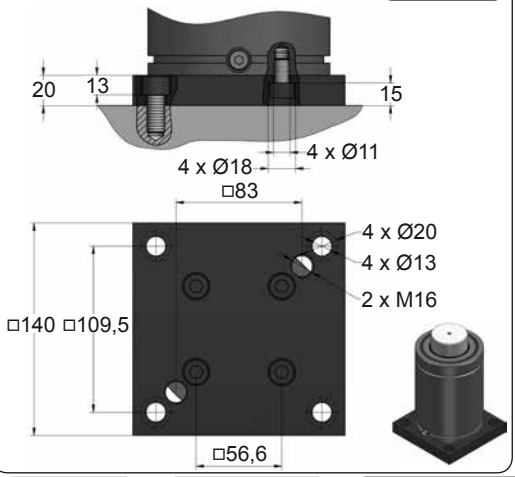


## B76-120

EM24.54.700/F

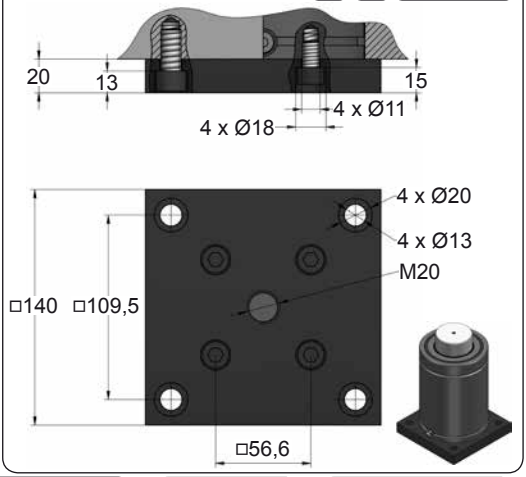









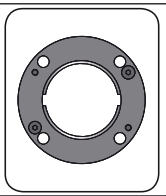

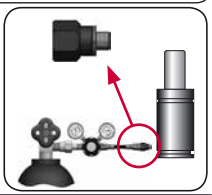

| CODE | | VAM 3000 050 | KIT XXXXXXX-S<br>KIT XXXXXXX-C | A14-120 | 18 GA 5 |
|---|---|---|---|---|---|
| ENG | ORDER | GAS SPRING | REPAIR KIT | FLANGE | CHARGING ADAPTER |
| DEU | BESTELLUNG | GASDRUCKFEDER | ERSATZTEILSATZ | FLANSCHE | LADEADAPTER |
| FRA | COMMANDE | RESSORT À GAZ | KIT DE RÉPARATION | BRIDE | RACCORD DE CHARGE |
| ITA | ORDINE | CILINDRO AD AZOTO | KIT DI MANUTENZIONE | FLANGE | ADATTATORE DI CARICO |
| ESP | PEDIDO | RESORTE DE GAS | KIT DE REPARACION | BRIDA | ADAPTADOR DE CARGA |
| POR | PEDIDO | CILINDRO DE GÁS | KIT DE MANUTENÇÃO | FLANGE | ADAPTADOR DE CARGA |

AZOL GAS

# VAM 3000 MOUNTS

Speed Control

## C05-120

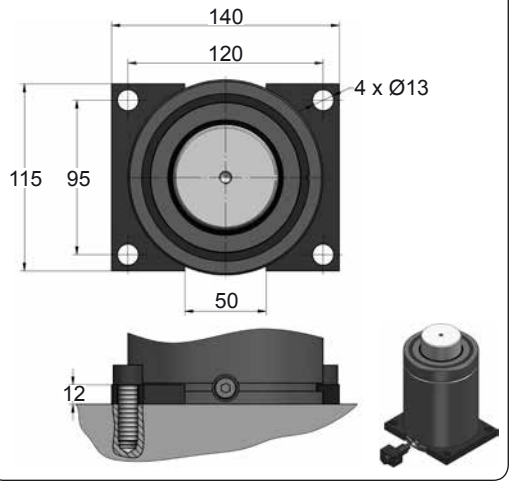


## C20-120

ISO · VDI · E24.54.815.G · EM24.54.700/F

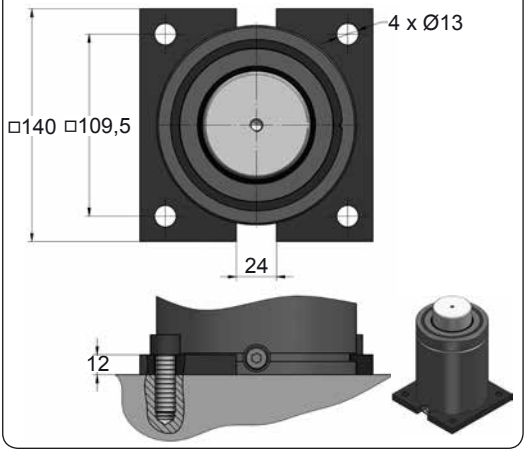


## D02-120

ISO · E24.54.815.G · EM24.54.700/F

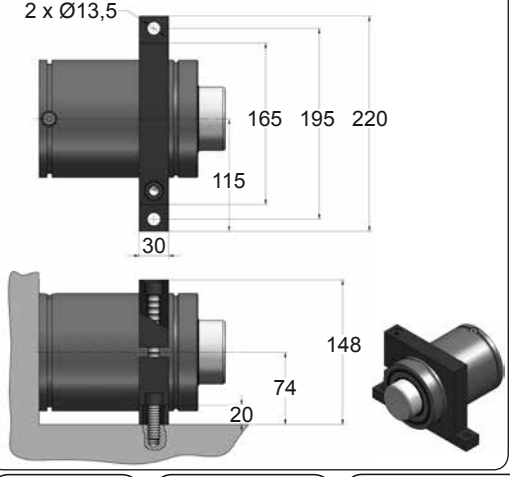


## D67-120

VDI

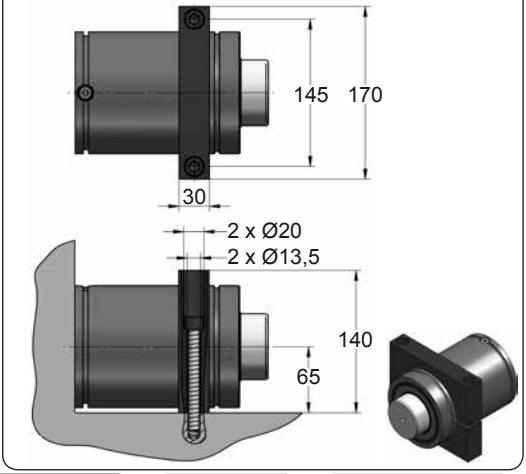





| CODE | | VAM 3000 050 | KIT XXXXXXX-S<br>KIT XXXXXXX-C | C05-120 | 18 GA 5 |
|---|---|---|---|---|---|
| ENG | ORDER | GAS SPRING | REPAIR KIT | FLANGE | CHARGING ADAPTER |
| DEU | BESTELLUNG | GASDRUCKFEDER | ERSATZTEILSATZ | FLANSCHE | LADEADAPTER |
| FRA | COMMANDE | RESSORT À GAZ | KIT DE RÉPARATION | BRIDE | RACCORD DE CHARGE |
| ITA | ORDINE | CILINDRO AD AZOTO | KIT DI MANUTENZIONE | FLANGE | ADATTATORE DI CARICO |
| ESP | PEDIDO | RESORTE DE GAS | KIT DE REPARACION | BRIDA | ADAPTADOR DE CARGA |
| POR | PEDIDO | CILINDRO DE GÁS | KIT DE MANUTENÇÃO | FLANGE | ADAPTADOR DE CARGA |

# VAM 5000

Speed Control

AZOL GAS

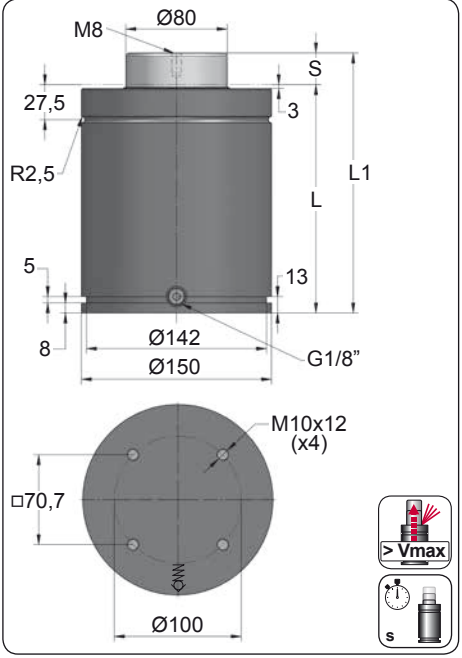


| ORDER | S (mm) | L1 ±0,25 (mm) | L (mm) | Kg. |
|---|---|---|---|---|
| VAM 5000 012 | 12.7 | 180.4 | 167.7 | 18.22 |
| VAM 5000 025 | 25 | 205 | 180 | 19.22 |
| VAM 5000 038 | 38 | 231 | 193 | 20.27 |
| VAM 5000 050 | 50 | 255 | 205 | 21.25 |
| VAM 5000 063 | 63.5 | 282 | 218.5 | 22.34 |
| VAM 5000 080 | 80 | 315 | 235 | 23.68 |
| VAM 5000 100 | 100 | 355 | 255 | 25.30 |
| VAM 5000 125 | 125 | 405 | 280 | 27.32 |

$t_{max} = k \times S_U$

| | k |
|---|---|
| VAM 5000 | 0.214 |

Max. delay time ($t_{max}$)
Constant (k)
Stroke used ($S_U$)

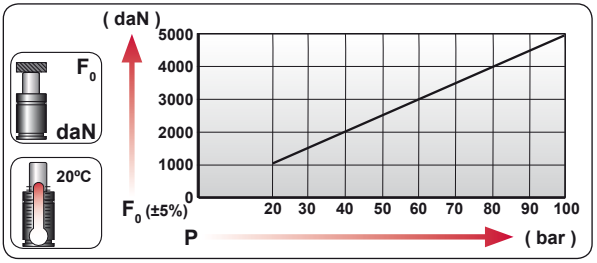


| CODE | bar | psi | $F_0$ daN | $F_1$ daN |
|---|---|---|---|---|
| VAM 5000 | 100 | 1450 | 5025 | 6800 |

-Slight initial return back depends on the stroke used.

-Return at constant slowed speed.

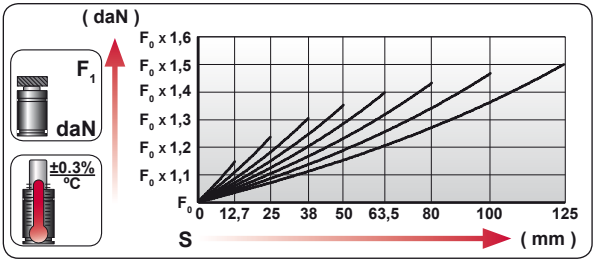


| ENG | ORDER |
|---|---|
| DEU | BESTELLUNG |
| FRA | COMMANDE |
| ITA | ORDINE |
| ESP | PEDIDO |
| POR | PEDIDO |

$F_0$ daN — S mm

VAM 5000 50

VAM 5000 050

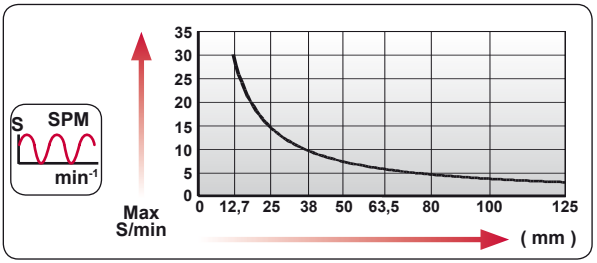


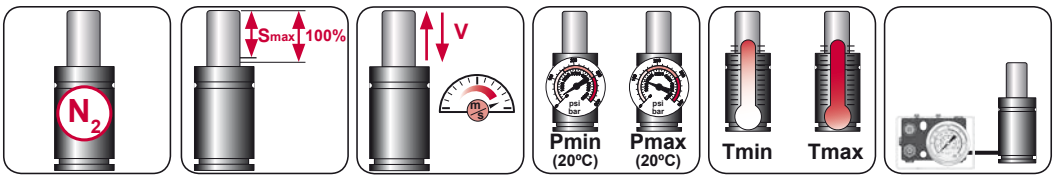


| $N_2$ | Smax < 90% | Vmax 0,5 m/s | bar psi 20 290 | bar psi 100 1450 | ºC ºF 0 32 | ºC ºF 80 176 | 600 CP- |
|---|---|---|---|---|---|---|---|

AZOL GAS

# VAM 5000

Speed Control

## CONVENTIONAL

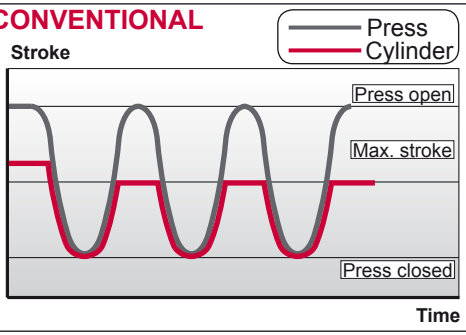


## VAM

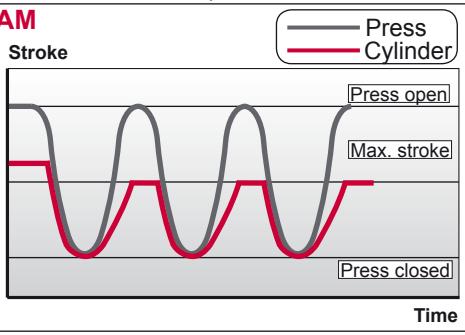


## DATA REQUIRED




- Desired force **( daN )**:.....




- Total stroke **( mm )**:.....




- Stroke used **( mm )**:.....




- Number of cycles per minute:.....




- Desired delay time **( eg. 1 segundo)**:.....








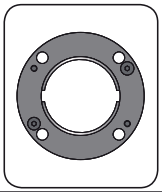

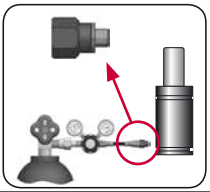

| CODE | | VAM 5000 050 | KIT XXXXXXX-S<br>KIT XXXXXXX-C | A14-150 | 18 GA 5 |
|---|---|---|---|---|---|
| ENG | ORDER | GAS SPRING | REPAIR KIT | FLANGE | CHARGING ADAPTER |
| DEU | BESTELLUNG | GASDRUCKFEDER | ERSATZTEILSATZ | FLANSCHE | LADEADAPTER |
| FRA | COMMANDE | RESSORT À GAZ | KIT DE RÉPARATION | BRIDE | RACCORD DE CHARGE |
| ITA | ORDINE | CILINDRO AD AZOTO | KIT DI MANUTENZIONE | FLANGE | ADATTATORE DI CARICO |
| ESP | PEDIDO | RESORTE DE GAS | KIT DE REPARACION | BRIDA | ADAPTADOR DE CARGA |
| POR | PEDIDO | CILINDRO DE GÁS | KIT DE MANUTENÇÃO | FLANGE | ADAPTADOR DE CARGA |

# VAM 5000 MOUNTS

Speed Control

AZOL GAS

## A14-150

E24.54.815.G
EM24.54.700/F

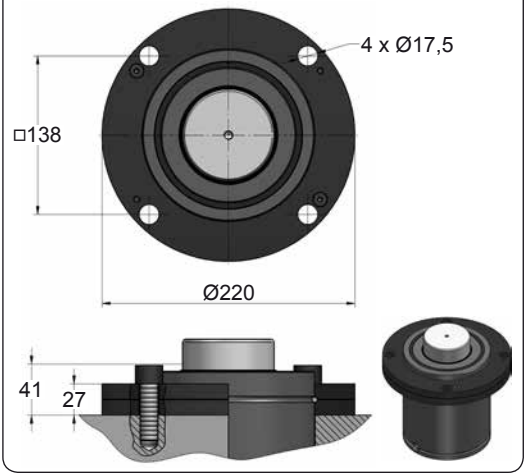


## A34-150

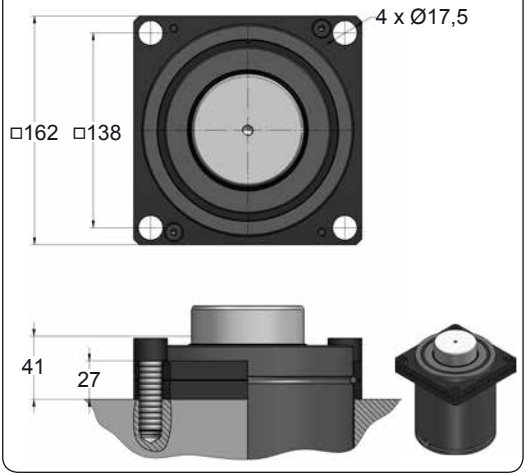


## B21-150

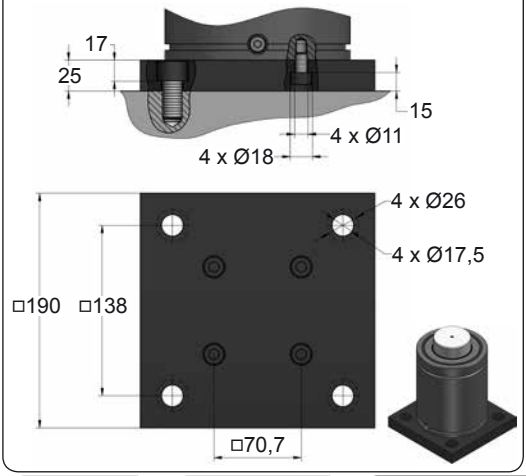


## B76-150

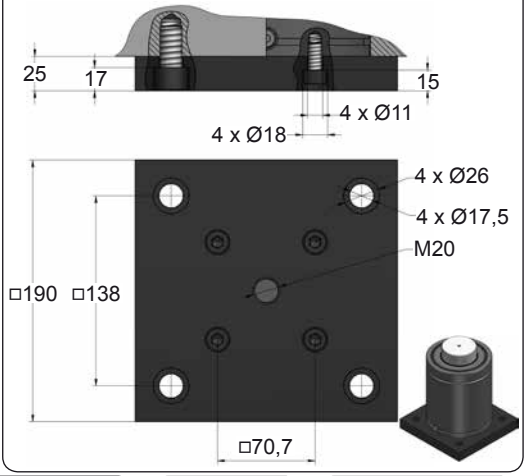









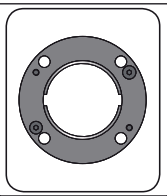

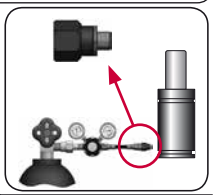

| CODE | | VAM 5000 050 | KIT XXXXXXX-S<br>KIT XXXXXXX-C | A14-150 | 18 GA 5 |
|---|---|---|---|---|---|
| ENG | ORDER | GAS SPRING | REPAIR KIT | FLANGE | CHARGING ADAPTER |
| DEU | BESTELLUNG | GASDRUCKFEDER | ERSATZTEILSATZ | FLANSCHE | LADEADAPTER |
| FRA | COMMANDE | RESSORT À GAZ | KIT DE RÉPARATION | BRIDE | RACCORD DE CHARGE |
| ITA | ORDINE | CILINDRO AD AZOTO | KIT DI MANUTENZIONE | FLANGE | ADATTATORE DI CARICO |
| ESP | PEDIDO | RESORTE DE GAS | KIT DE REPARACION | BRIDA | ADAPTADOR DE CARGA |
| POR | PEDIDO | CILINDRO DE GÁS | KIT DE MANUTENÇÃO | FLANGE | ADAPTADOR DE CARGA |

AZOL GAS

# VAM 5000 MOUNTS

Speed Control

## C05-150

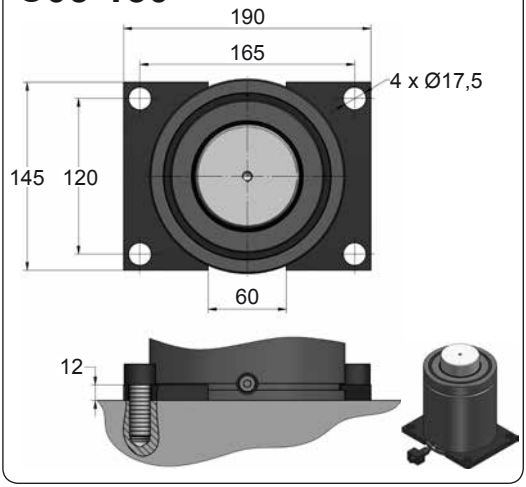


## C20-150

ISO VDI E24.54.815.G EM24.54.700/F

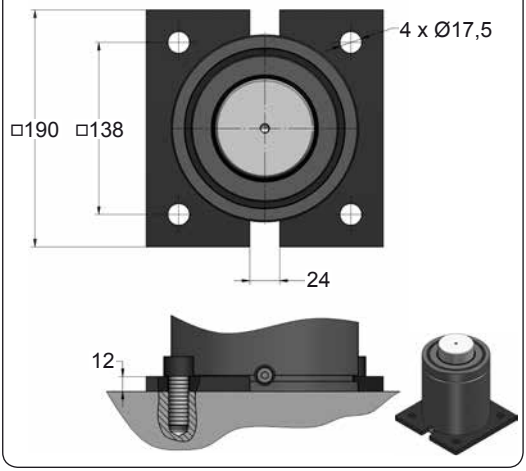


## D02-150

ISO E24.54.815.G

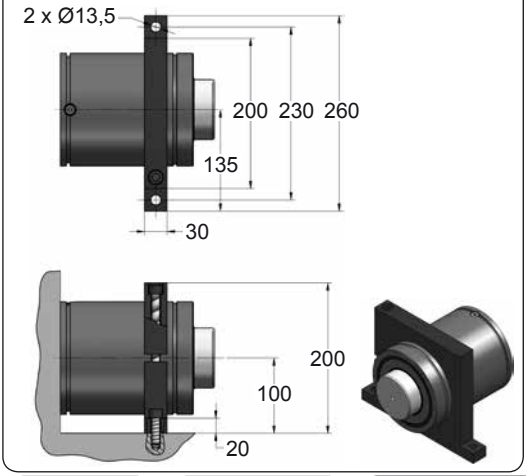


## D67-150

VDI

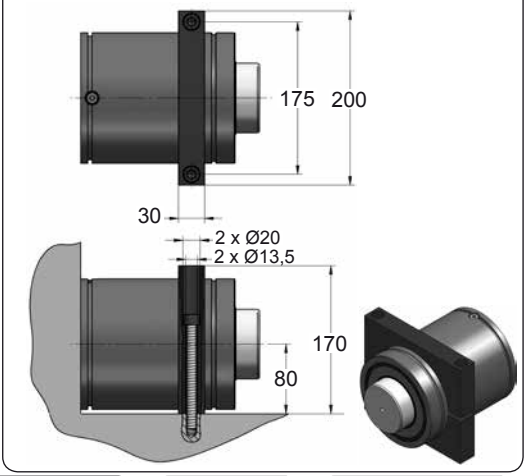









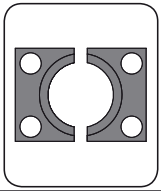

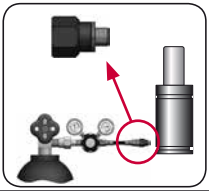

| CODE | | VAM 5000 050 | KIT XXXXXXX-S<br>KIT XXXXXXX-C | C05-150 | 18 GA 5 |
|---|---|---|---|---|---|
| ENG | ORDER | GAS SPRING | REPAIR KIT | FLANGE | CHARGING ADAPTER |
| DEU | BESTELLUNG | GASDRUCKFEDER | ERSATZTEILSATZ | FLANSCHE | LADEADAPTER |
| FRA | COMMANDE | RESSORT À GAZ | KIT DE RÉPARATION | BRIDE | RACCORD DE CHARGE |
| ITA | ORDINE | CILINDRO AD AZOTO | KIT DI MANUTENZIONE | FLANGE | ADATTATORE DI CARICO |
| ESP | PEDIDO | RESORTE DE GAS | KIT DE REPARACION | BRIDA | ADAPTADOR DE CARGA |
| POR | PEDIDO | CILINDRO DE GÁS | KIT DE MANUTENÇÃO | FLANGE | ADAPTADOR DE CARGA |

# VAM 7500

Speed Control

AZOL GAS

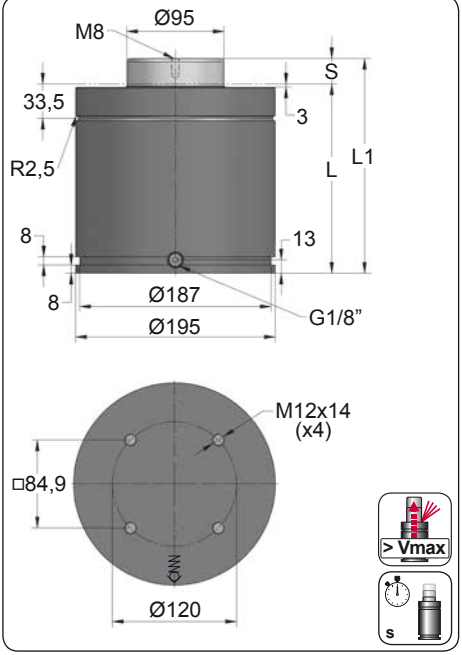


| ORDER | S (mm) | L1 ±0,25 (mm) | L (mm) | Kg. |
|---|---|---|---|---|
| VAM 7500 012 | 12.7 | 185.4 | 172.7 | 33.44 |
| VAM 7500 025 | 25 | 210 | 185 | 35.08 |
| VAM 7500 038 | 38 | 236 | 198 | 36.81 |
| VAM 7500 050 | 50 | 260 | 210 | 38.41 |
| VAM 7500 063 | 63.5 | 287 | 223.5 | 40.20 |
| VAM 7500 080 | 80 | 320 | 240 | 42.40 |
| VAM 7500 100 | 100 | 360 | 260 | 45.06 |
| VAM 7500 125 | 125 | 410 | 285 | 48.38 |

$t_{max} = k \times S_U$

| | k |
|---|---|
| VAM 7500 | 0.289 |

Max. delay time ($t_{max}$)
Constant (k)
Stroke used ($S_U$)

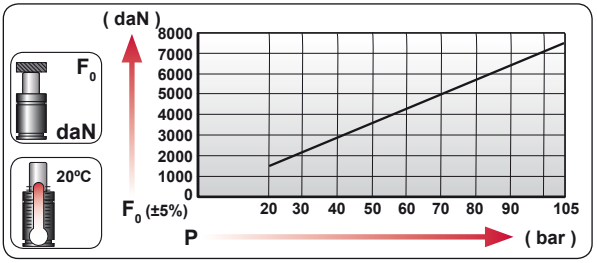


| CODE | bar | psi | $F_0$ daN | $F_1$ daN |
|---|---|---|---|---|
| VAM 7500 | 105 | 1520 | 7440 | 9760 |

-Slight initial return back depends on the stroke used.

-Return at constant slowed speed.

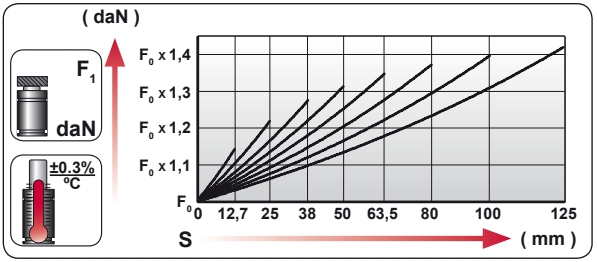


| | ENG | ORDER |
|---|---|---|
| | DEU | BESTELLUNG |
| | FRA | COMMANDE |
| | ITA | ORDINE |
| | ESP | PEDIDO |
| | POR | PEDIDO |

$F_0$ daN — S mm

VAM 7500 50

VAM 7500 050

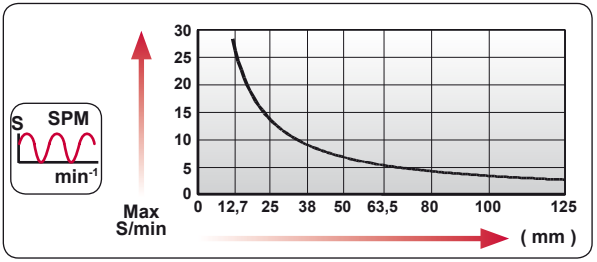


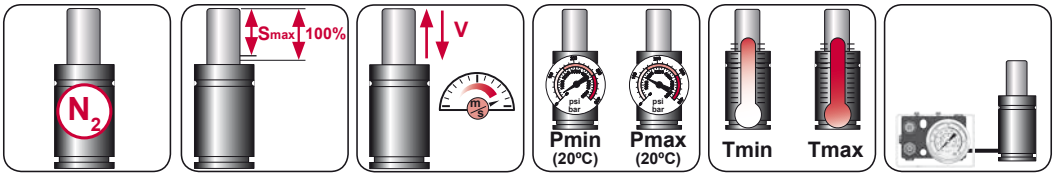


| $N_2$ | Smax < 90% | Vmax 0,5 m/s | bar psi 20 290 | bar psi 105 1520 | ºC ºF 0 32 | ºC ºF 80 176 | 600 CP- |
|---|---|---|---|---|---|---|---|

AZOL GAS

# VAM 7500

Speed Control

## CONVENTIONAL

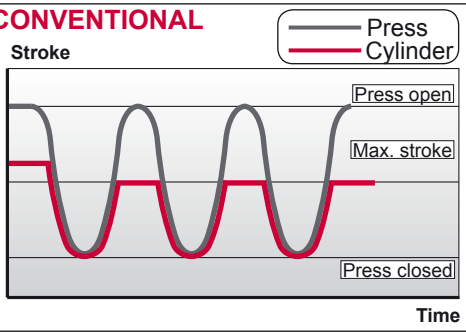


## VAM

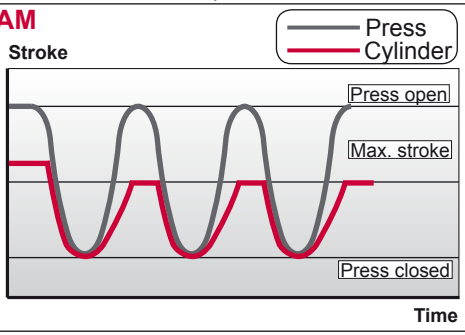


## DATA REQUIRED




- Desired force **( daN )**:.....




- Total stroke **( mm )**:.....




- Stroke used **( mm )**:.....




- Number of cycles per minute:.....




- Desired delay time **( eg. 1 segundo)**:.....








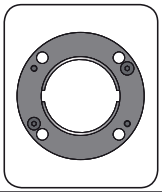

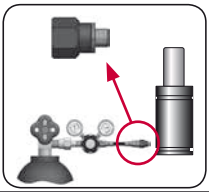

| CODE | | VAM 7500 050 | KIT XXXXXXX-S<br>KIT XXXXXXX-C | A14-195 | 18 GA 5 |
|---|---|---|---|---|---|
| ENG | ORDER | GAS SPRING | REPAIR KIT | FLANGE | CHARGING ADAPTER |
| DEU | BESTELLUNG | GASDRUCKFEDER | ERSATZTEILSATZ | FLANSCHE | LADEADAPTER |
| FRA | COMMANDE | RESSORT À GAZ | KIT DE RÉPARATION | BRIDE | RACCORD DE CHARGE |
| ITA | ORDINE | CILINDRO AD AZOTO | KIT DI MANUTENZIONE | FLANGE | ADATTATORE DI CARICO |
| ESP | PEDIDO | RESORTE DE GAS | KIT DE REPARACION | BRIDA | ADAPTADOR DE CARGA |
| POR | PEDIDO | CILINDRO DE GÁS | KIT DE MANUTENÇÃO | FLANGE | ADAPTADOR DE CARGA |

# VAM 7500 MOUNTS

Speed Control

AZOL GAS

## A14-195

ISO EM24.54.700/F

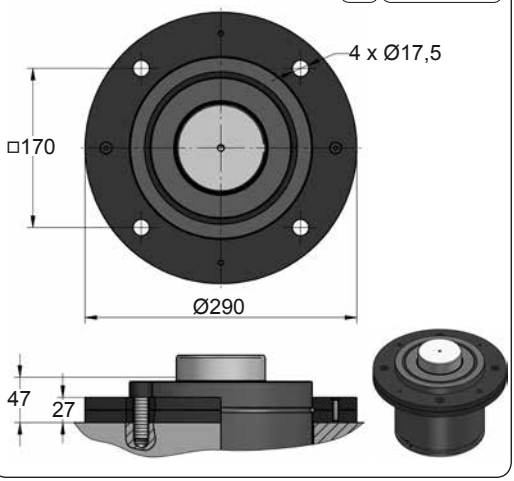


## A34-195

ISO VDI

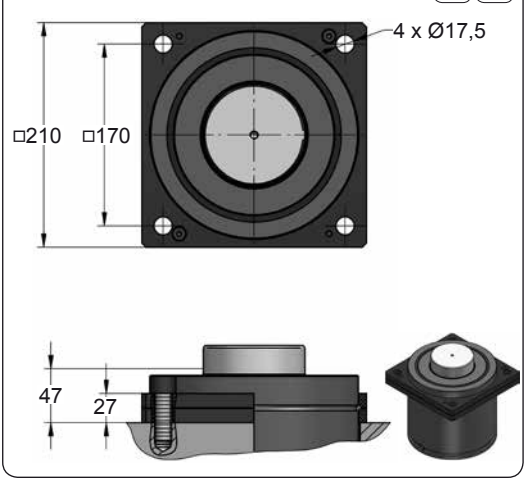


## B21-195

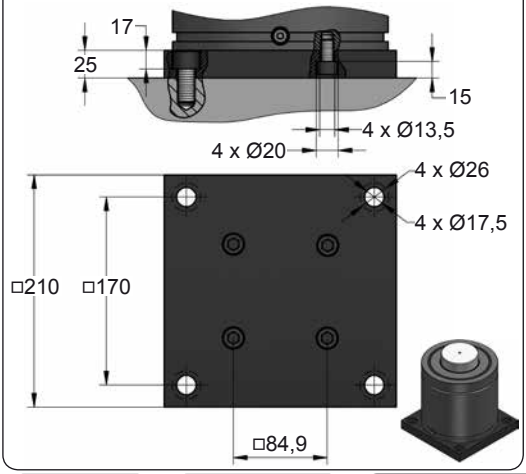


## B76-195

ISO

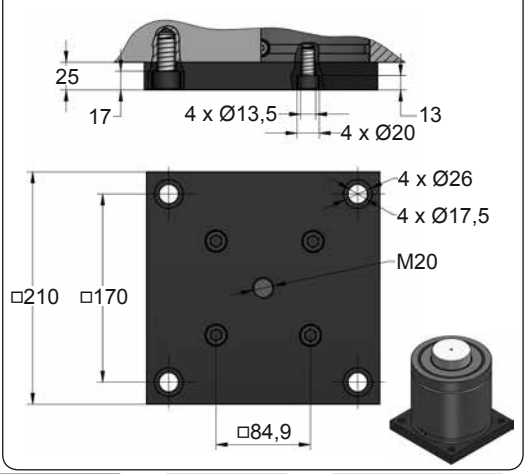




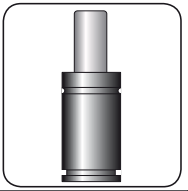




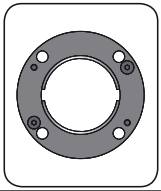

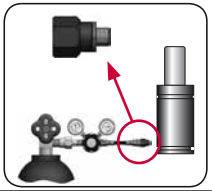

| CODE | | VAM 7500 050 | KIT XXXXXXX-S<br>KIT XXXXXXX-C | A14-195 | 18 GA 5 |
|---|---|---|---|---|---|
| ENG | ORDER | GAS SPRING | REPAIR KIT | FLANGE | CHARGING ADAPTER |
| DEU | BESTELLUNG | GASDRUCKFEDER | ERSATZTEILSATZ | FLANSCHE | LADEADAPTER |
| FRA | COMMANDE | RESSORT À GAZ | KIT DE RÉPARATION | BRIDE | RACCORD DE CHARGE |
| ITA | ORDINE | CILINDRO AD AZOTO | KIT DI MANUTENZIONE | FLANGE | ADATTATORE DI CARICO |
| ESP | PEDIDO | RESORTE DE GAS | KIT DE REPARACION | BRIDA | ADAPTADOR DE CARGA |
| POR | PEDIDO | CILINDRO DE GÁS | KIT DE MANUTENÇÃO | FLANGE | ADAPTADOR DE CARGA |

AZOL GAS

# VAM 7500 MOUNTS

*Speed Control*

## C05-195

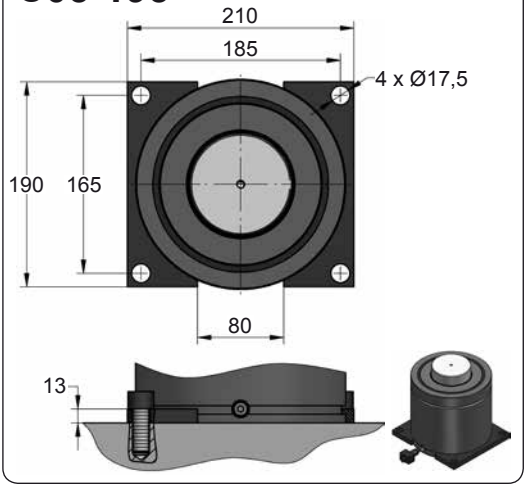


## C20-195

ISO VDI EM24.54.700/F

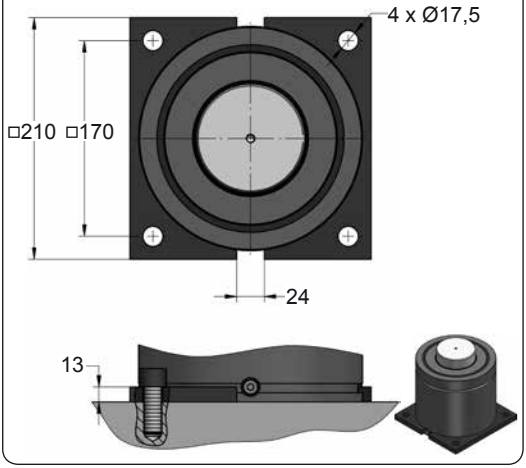


## D02-195

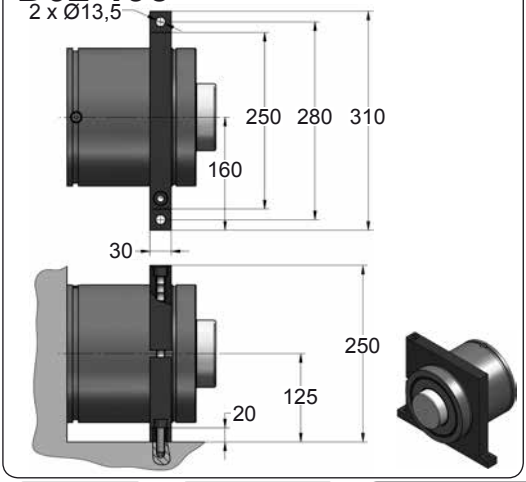





| CODE | | VAM 7500 050 | KIT XXXXXXX-S<br>KIT XXXXXXX-C | C05-195 | 18 GA 5 |
|---|---|---|---|---|---|
| ENG | ORDER | GAS SPRING | REPAIR KIT | FLANGE | CHARGING ADAPTER |
| DEU | BESTELLUNG | GASDRUCKFEDER | ERSATZTEILSATZ | FLANSCHE | LADEADAPTER |
| FRA | COMMANDE | RESSORT À GAZ | KIT DE RÉPARATION | BRIDE | RACCORD DE CHARGE |
| ITA | ORDINE | CILINDRO AD AZOTO | KIT DI MANUTENZIONE | FLANGE | ADATTATORE DI CARICO |
| ESP | PEDIDO | RESORTE DE GAS | KIT DE REPARACION | BRIDA | ADAPTADOR DE CARGA |
| POR | PEDIDO | CILINDRO DE GÁS | KIT DE MANUTENÇÃO | FLANGE | ADAPTADOR DE CARGA |

# AZOL GAS VMD SLOWED RETURN TOOL SEPARATION

| MODEL | $F_0$ | Ø | S | L1 | Pmax | Charge Port | | |
|---|---|---|---|---|---|---|---|---|
| VMD 3000 | 3000 | Ø95 | 80 - 300 | 280 - 720 | 150 | G1/8" | ✓ | ✓ |
| VMD 5000 | 5000 | Ø120 | 80 - 300 | 300 - 740 | 150 | G1/8" | ✓ | ✓ |
| VMD 7500 | 7500 | Ø150 | 80 - 300 | 315 - 755 | 150 | G1/8" | ✓ | ✓ |









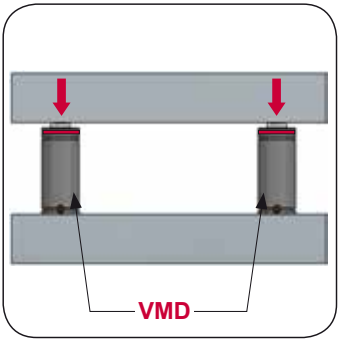


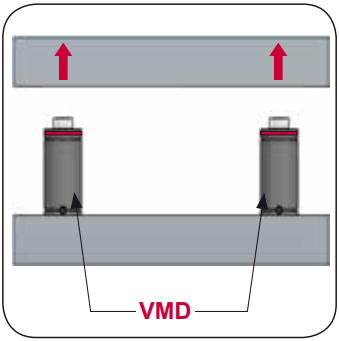


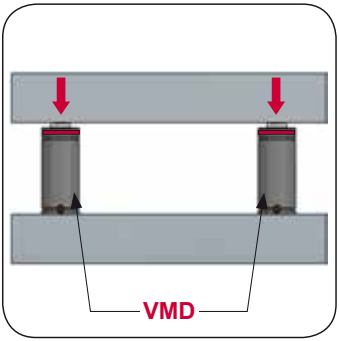

# VMD 3000

*Slowed Return Tool Separation*

AZOL GAS

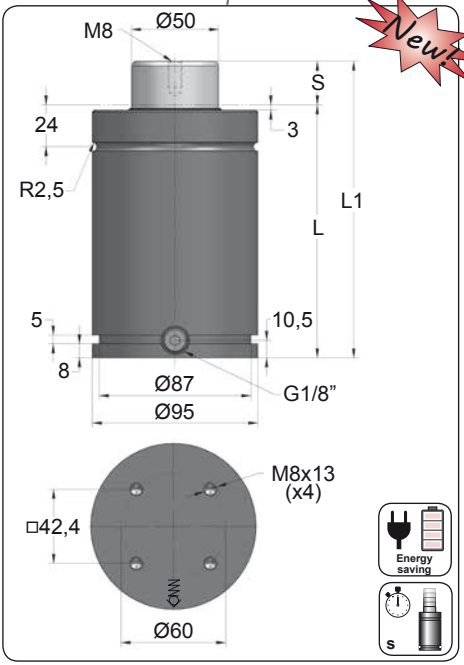


Newt

| ORDER | S (mm) | L1 ±0,25 (mm) | L (mm) | Kg. |
|---|---|---|---|---|
| VMD 3000 080 | 80 | 280 | 200 | 8.21 |
| VMD 3000 100 | 100 | 320 | 220 | 8.40 |
| VMD 3000 125 | 125 | 370 | 245 | 8.98 |
| VMD 3000 160 | 160 | 440 | 280 | 10.08 |
| VMD 3000 200 | 200 | 520 | 320 | 11.40 |
| VMD 3000 250 | 250 | 620 | 370 | 13.20 |
| VMD 3000 300 | 300 | 720 | 420 | 14.25 |

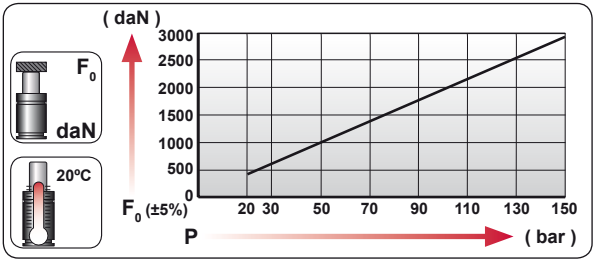


| CODE | bar | psi | F0 daN | F1 daN |
|---|---|---|---|---|
| VMD 3000 080 | 150 | 2175 | 2945 | 4365 |

WARNING!
Very slowed return, avoid crush.

## CONVENTIONAL

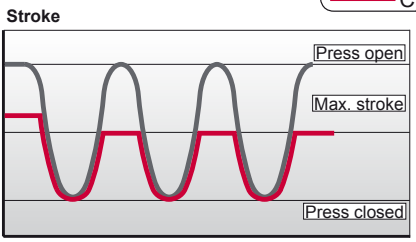


## VMD

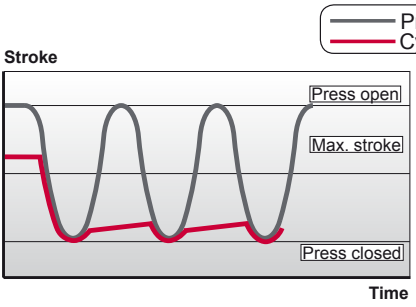


| | |
|---|---|
| ENG | ORDER |
| DEU | BESTELLUNG |
| FRA | COMMANDE |
| ITA | ORDINE |
| ESP | PEDIDO |
| POR | PEDIDO |

F0 daN — S mm

VMD 3000 80

VMD 3000 080

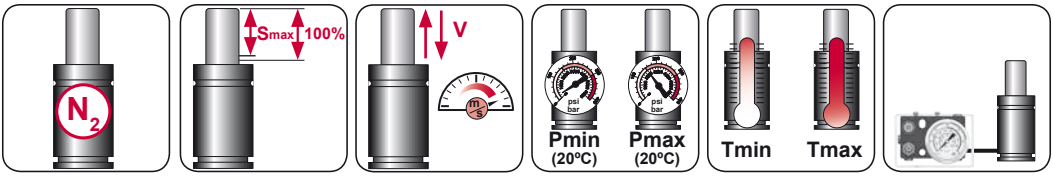


| $N_2$ | Smax < 90% | Vmax 0,5 m/s | bar psi 20 290 | bar psi 150 2175 | ºC ºF 0 32 | ºC ºF 80 176 | 600 CP- |
|---|---|---|---|---|---|---|---|

AZOL GAS

# VMD 3000 MOUNTS

*Slowed Return Tool Separation*

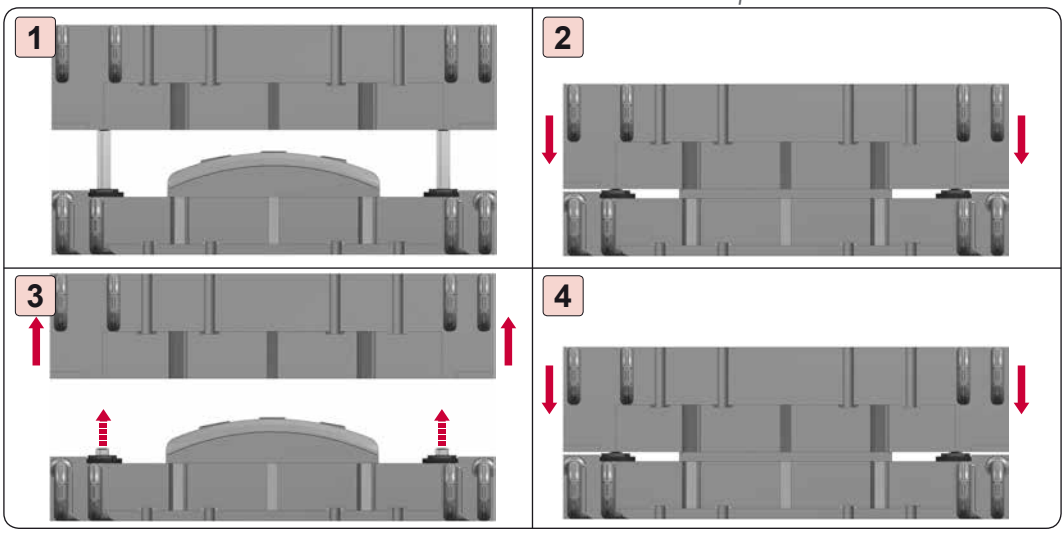


## A14-095

E24.54.815.G
EM24.54.700/F

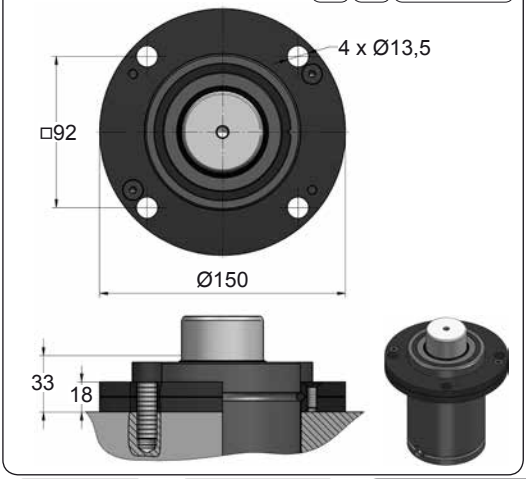


## A34-095

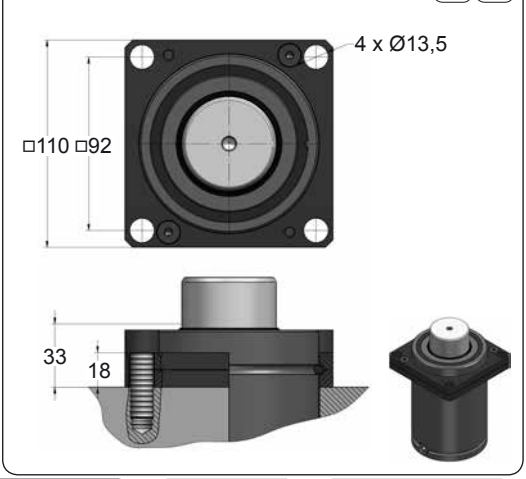





| CODE | | VMD 3000 080 | KIT XXXXXXX-S<br>KIT XXXXXXX-C | A14-095 | 18 GA 5 |
|---|---|---|---|---|---|
| ENG | ORDER | GAS SPRING | REPAIR KIT | FLANGE | CHARGING ADAPTER |
| DEU | BESTELLUNG | GASDRUCKFEDER | ERSATZTEILSATZ | FLANSCHE | LADEADAPTER |
| FRA | COMMANDE | RESSORT À GAZ | KIT DE RÉPARATION | BRIDE | RACCORD DE CHARGE |
| ITA | ORDINE | CILINDRO AD AZOTO | KIT DI MANUTENZIONE | FLANGE | ADATTATORE DI CARICO |
| ESP | PEDIDO | RESORTE DE GAS | KIT DE REPARACION | BRIDA | ADAPTADOR DE CARGA |
| POR | PEDIDO | CILINDRO DE GÁS | KIT DE MANUTENÇÃO | FLANGE | ADAPTADOR DE CARGA |

# VMD 5000

*Slowed Return Tool Separation*

AZOL GAS

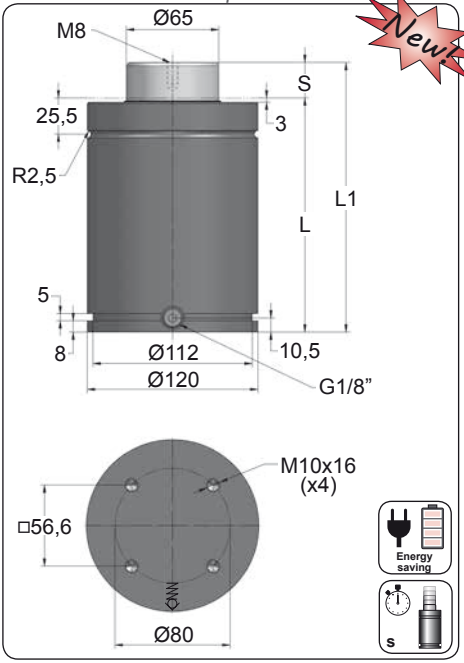


| ORDER | S (mm) | L1 ±0,25 (mm) | L (mm) | Kg. |
|---|---|---|---|---|
| VMD 5000 080 | 80 | 300 | 220 | 14.60 |
| VMD 5000 100 | 100 | 340 | 240 | 15.05 |
| VMD 5000 125 | 125 | 390 | 265 | 16.40 |
| VMD 5000 160 | 160 | 460 | 300 | 18.20 |
| VMD 5000 200 | 200 | 540 | 340 | 20.00 |
| VMD 5000 250 | 250 | 640 | 390 | 23.40 |
| VMD 5000 300 | 300 | 740 | 440 | 25.00 |

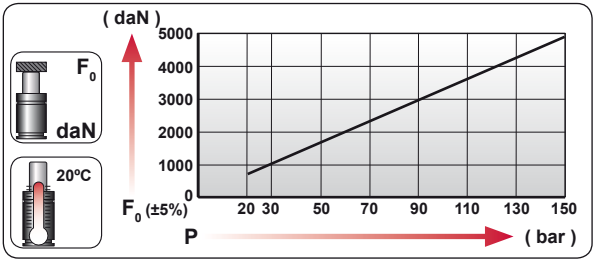


## CONVENTIONAL

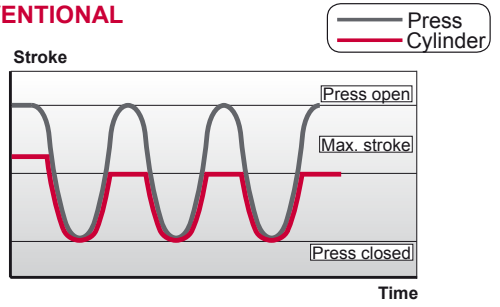


| CODE | bar | psi | $F_0$ daN | $F_1$ daN |
|---|---|---|---|---|
| VMD 5000 080 | 150 | 2175 | 4980 | 7560 |

WARNING!
Very slowed return, avoid crush.

## VMD

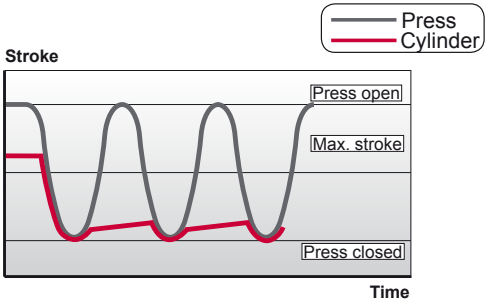


| | |
|---|---|
| ENG | ORDER |
| DEU | BESTELLUNG |
| FRA | COMMANDE |
| ITA | ORDINE |
| ESP | PEDIDO |
| POR | PEDIDO |

$F_0$ daN — S mm

VMD 5000 80

VMD 5000 080

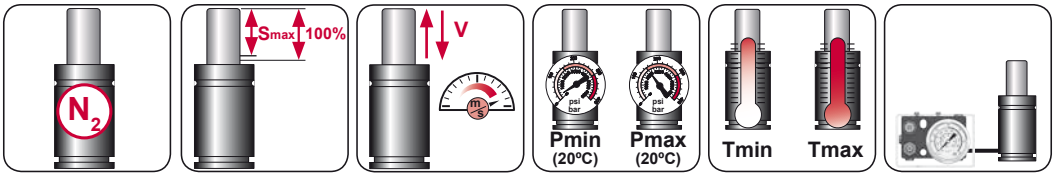


| $N_2$ | Smax < 90% | Vmax 0,5 m/s | bar psi 20 290 | bar psi 150 2175 | ºC ºF 0 32 | ºC ºF 80 176 | 600 CP- |
|---|---|---|---|---|---|---|---|

AZOL GAS

# VMD 5000 MOUNTS

*Slowed Return Tool Separation*

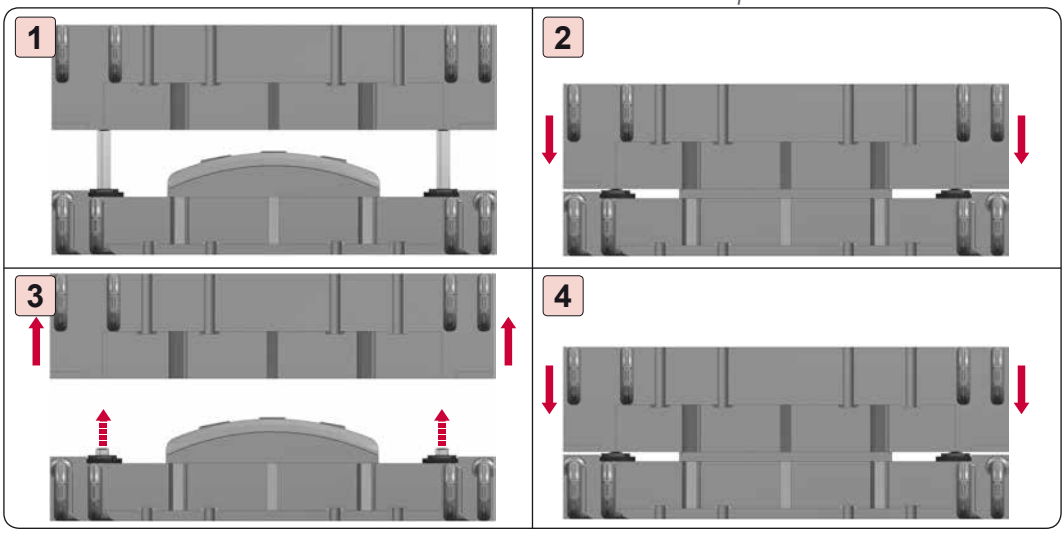


## A14-120

E24.54.815.G
EM24.54.700/F

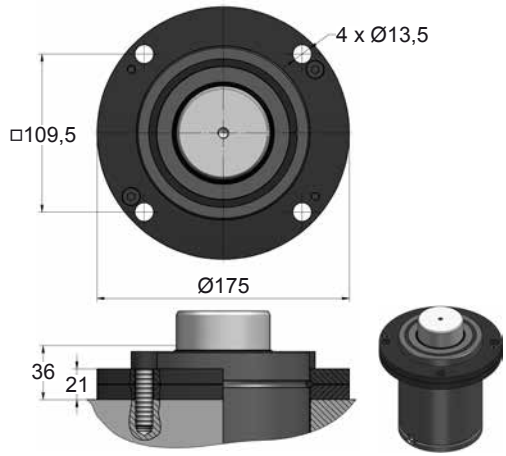


## A34-120

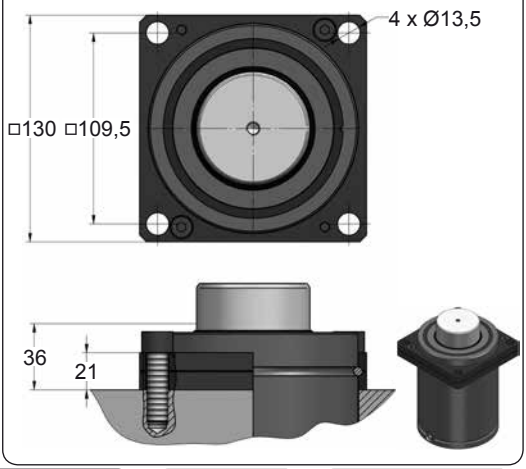





| CODE | | VMD 5000 080 | KIT XXXXXXX-S<br>KIT XXXXXXX-C | A14-120 | 18 GA 5 |
|---|---|---|---|---|---|
| ENG | ORDER | GAS SPRING | REPAIR KIT | FLANGE | CHARGING ADAPTER |
| DEU | BESTELLUNG | GASDRUCKFEDER | ERSATZTEILSATZ | FLANSCHE | LADEADAPTER |
| FRA | COMMANDE | RESSORT À GAZ | KIT DE RÉPARATION | BRIDE | RACCORD DE CHARGE |
| ITA | ORDINE | CILINDRO AD AZOTO | KIT DI MANUTENZIONE | FLANGE | ADATTATORE DI CARICO |
| ESP | PEDIDO | RESORTE DE GAS | KIT DE REPARACION | BRIDA | ADAPTADOR DE CARGA |
| POR | PEDIDO | CILINDRO DE GÁS | KIT DE MANUTENÇÃO | FLANGE | ADAPTADOR DE CARGA |

# VMD 7500

*Slowed Return Tool Separation*

AZOL GAS

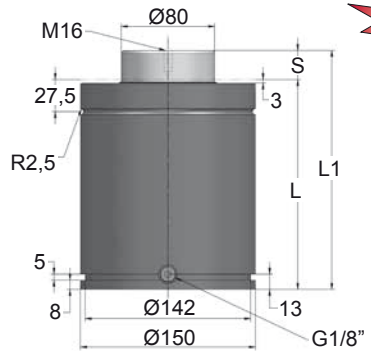


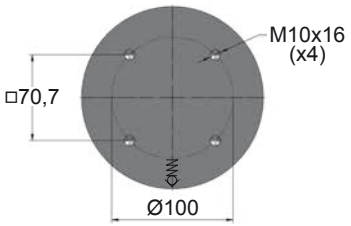


Energy saving

| ORDER | S (mm) | L1 ±0,25 (mm) | L (mm) | Kg. |
|---|---|---|---|---|
| VMD 7500 080 | 80 | 315 | 235 | 23.50 |
| VMD 7500 100 | 100 | 355 | 255 | 26.00 |
| VMD 7500 125 | 125 | 405 | 280 | 27.00 |
| VMD 7500 160 | 160 | 475 | 315 | 32.20 |
| VMD 7500 200 | 200 | 555 | 355 | 34.20 |
| VMD 7500 250 | 250 | 655 | 405 | 38.20 |
| VMD 7500 300 | 300 | 755 | 455 | 43.00 |

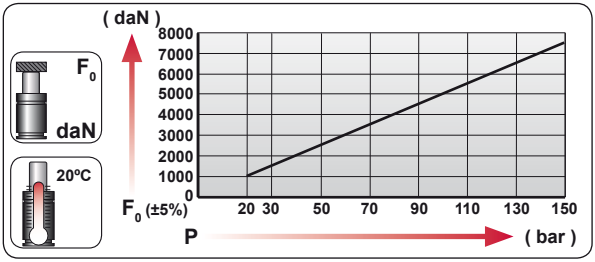


## CONVENTIONAL

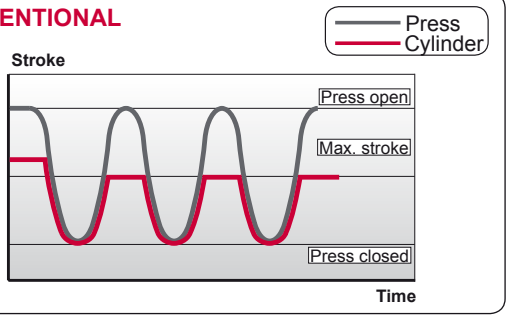


| CODE | bar | psi | F0 daN | F1 daN |
|---|---|---|---|---|
| VMD 7500 080 | 150 | 2175 | 7540 | 11470 |

WARNING!
Very slowed return, avoid crush.

## VMD

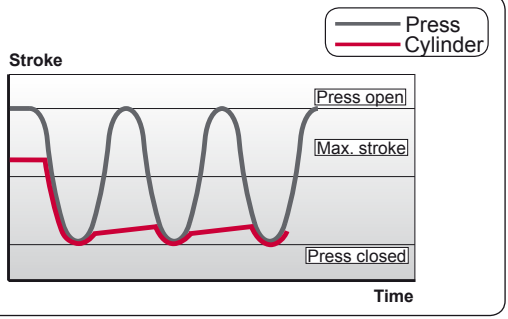


| | |
|---|---|
| ENG | ORDER |
| DEU | BESTELLUNG |
| FRA | COMMANDE |
| ITA | ORDINE |
| ESP | PEDIDO |
| POR | PEDIDO |

F0 daN — S mm

VMD 7500 80

VMD 7500 080

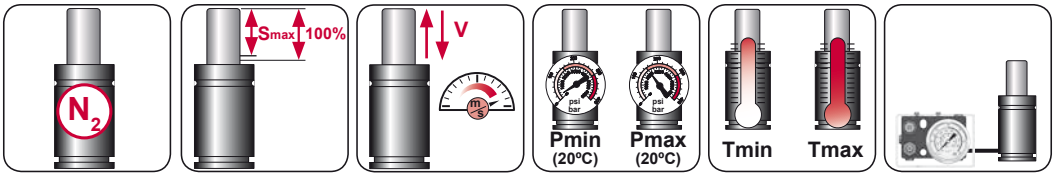


| $N_2$ | Smax < 90% | Vmax 0,5 m/s | bar psi 20 290 | bar psi 150 2175 | ºC ºF 0 32 | ºC ºF 80 176 | 600 CP- |
|---|---|---|---|---|---|---|---|

AZOL GAS

# VMD 7500 MOUNTS

*Slowed Return Tool Separation*

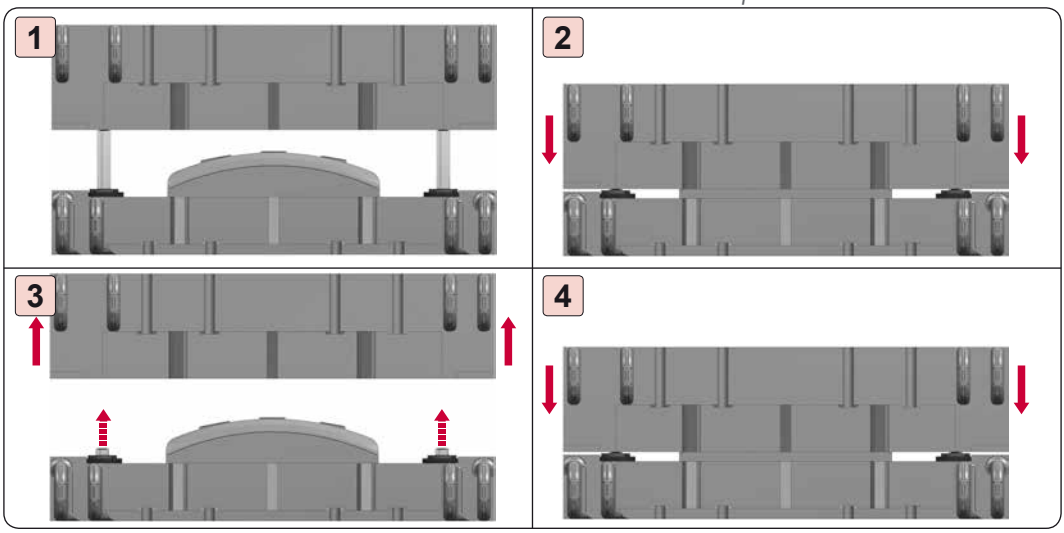


## A14-150

ISO E24.54.815.G EM24.54.700/F

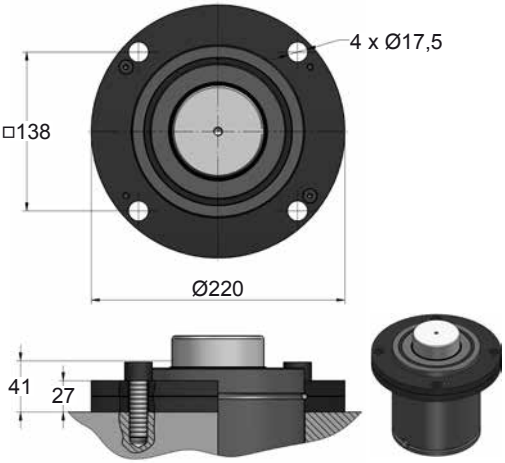


## A34-150

ISO VDI

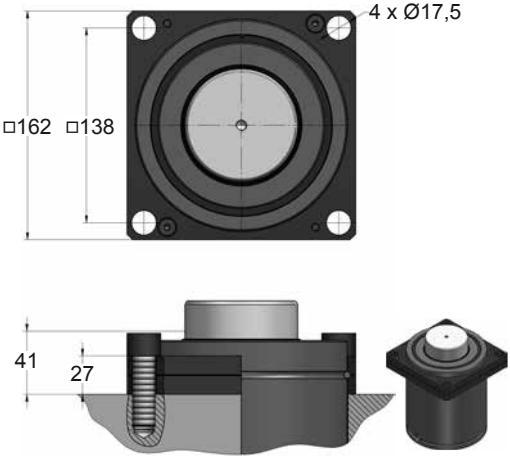









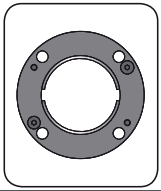

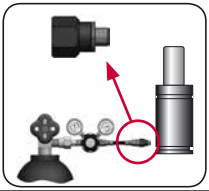

| CODE | | VMD 7500 080 | KIT XXXXXXX-S<br>KIT XXXXXXX-C | A14-150 | 18 GA 5 |
|---|---|---|---|---|---|
| ENG | ORDER | GAS SPRING | REPAIR KIT | FLANGE | CHARGING ADAPTER |
| DEU | BESTELLUNG | GASDRUCKFEDER | ERSATZTEILSATZ | FLANSCHE | LADEADAPTER |
| FRA | COMMANDE | RESSORT À GAZ | KIT DE RÉPARATION | BRIDE | RACCORD DE CHARGE |
| ITA | ORDINE | CILINDRO AD AZOTO | KIT DI MANUTENZIONE | FLANGE | ADATTATORE DI CARICO |
| ESP | PEDIDO | RESORTE DE GAS | KIT DE REPARACION | BRIDA | ADAPTADOR DE CARGA |
| POR | PEDIDO | CILINDRO DE GÁS | KIT DE MANUTENÇÃO | FLANGE | ADAPTADOR DE CARGA |

# AZOL GAS GAS STRIPPERS / STOCK LIFTERS

## EF_

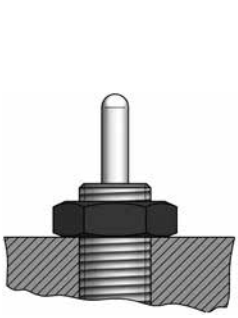



GAS STRIPPERS

## M_

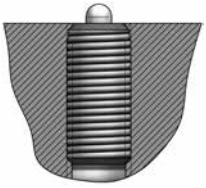



SPRING PLUNGERS

## EX_

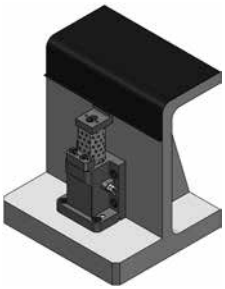

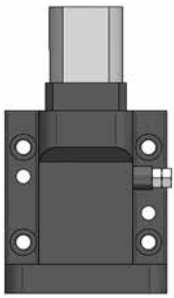

FLANGE STRIPPERS

## EXD_



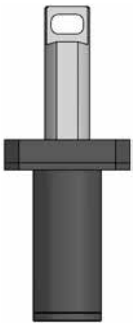

STOCK LIFTERS

# EFG 16

*Gas Strippers*

| | | | | |
|---|---|---|---|---|
| **BMW** | B2 4036 | **FORD** | W-DX35-6030 | |
| **MB** | B8 0820 100 000 002 | **GM** | 90.25 | |
| **VW** | 39D 549 | | | |

AZOL GAS

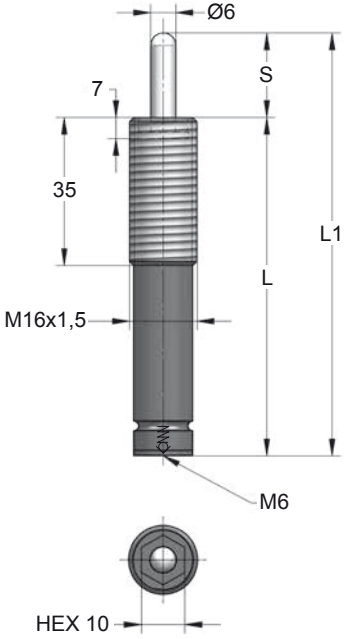


| CODE | S (mm) | L1 ±0,25 (mm) | L (mm) | Kg. |
|---|---|---|---|---|
| EFG 16 ___ 010 | 10 | 80 | 70 | 0.08 |
| EFG 16 ___ 020 | 20 | 100 | 80 | 0.09 |
| EFG 16 ___ 030 | 30 | 120 | 90 | 0.09 |
| EFG 16 ___ 040 | 40 | 140 | 100 | 0.10 |
| EFG 16 ___ 050 | 50 | 160 | 110 | 0.11 |
| EFG 16 ___ 060 | 60 | 180 | 120 | 0.11 |
| EFG 16 ___ 070 | 70 | 200 | 130 | 0.12 |
| EFG 16 ___ 080 | 80 | 220 | 140 | 0.12 |
| EFG 16 ___ 100 | 100 | 260 | 160 | 0.14 |

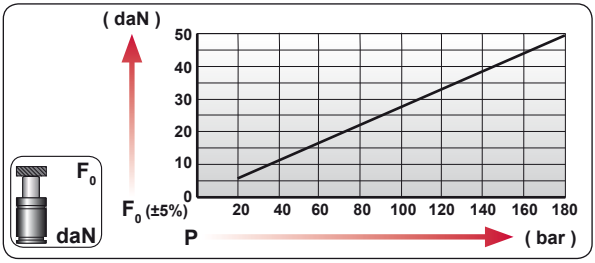


| CODE | COLOR | bar | psi | $F_0$ daN | $F_1$ daN |
|---|---|---|---|---|---|
| EFG 16 6 050 | Green | 20 | 290 | 6 | 8 |
| EFG 16 11 050 | Blue | 40 | 580 | 11 | 15 |
| EFG 16 21 050 | Red | 75 | 1090 | 21 | 30 |
| EFG 16 42 050 | Yellow | 150 | 2175 | 42 | 55 |
| EFG 16 XX 050 | Black | 20-180 | 290-2610 | 6 - 50 | 8 - 70 |

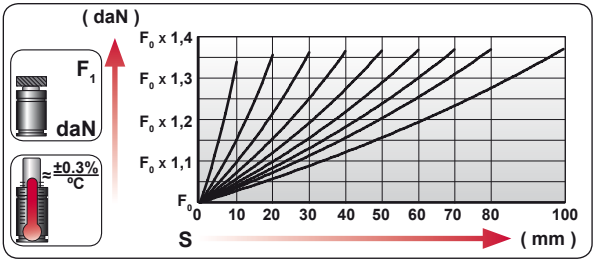


| | |
|---|---|
| ENG | ORDER |
| DEU | BESTELLUNG |
| FRA | COMMANDE |
| ITA | ORDINE |
| ESP | PEDIDO |
| POR | PEDIDO |

$F_0$ daN — S mm

EFG 16 50 50

EFG 16 50 050

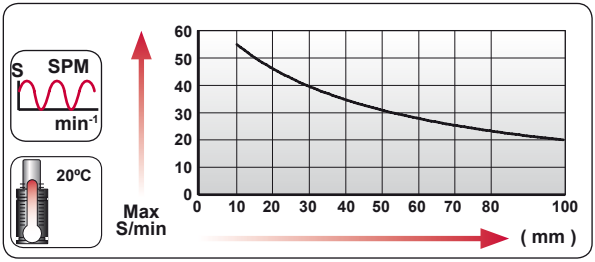


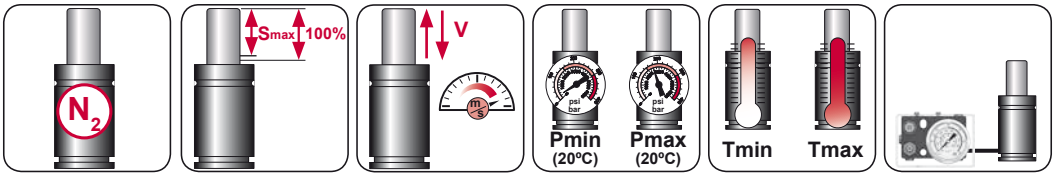


| $N_2$ | Smax < 90% | Vmax 1,6 m/s | bar psi 20 290 | bar psi 180 2610 | °C °F 0 32 | °C °F 80 176 | |
|---|---|---|---|---|---|---|---|

AZOL GAS

# EFG 16
Gas Strippers

## LPT 10

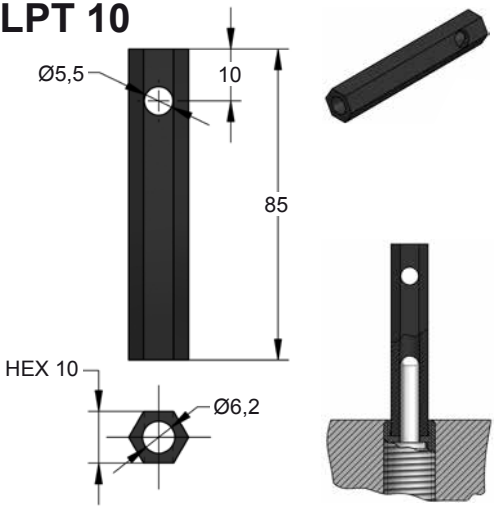


## E23-016

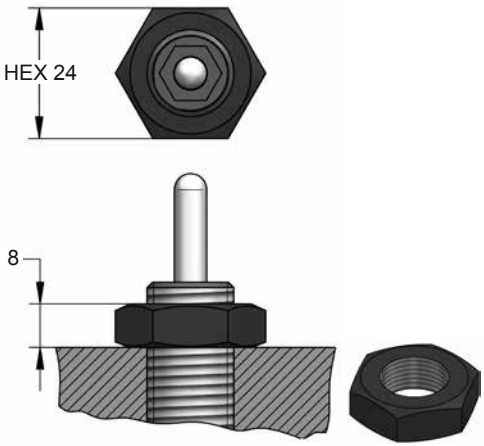









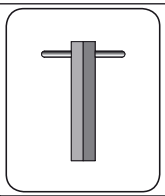

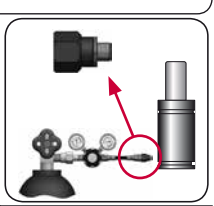

| CODE | | EFG 16 50 050 | | LPT 10 | 06 GA 11 |
|---|---|---|---|---|---|
| ENG | ORDER | GAS SPRING | REPAIR KIT | KEY | CHARGING ADAPTER |
| DEU | BESTELLUNG | GASDRUCKFEDER | ERSATZTEILSATZ | MONTAGESCHLÜSSEL | LADEADAPTER |
| FRA | COMMANDE | RESSORT À GAZ | KIT DE RÉPARATION | CLE | RACCORD DE CHARGE |
| ITA | ORDINE | CILINDRO AD AZOTO | KIT DI MANUTENZIONE | CHIAVE | ADATTATORE DI CARICO |
| ESP | PEDIDO | RESORTE DE GAS | KIT DE REPARACION | LLAVE | ADAPTADOR DE CARGA |
| POR | PEDIDO | CILINDRO DE GÁS | KIT DE MANUTENÇÃO | CHAVE | ADAPTADOR DE CARGA |

# EFGC 16

*Gas Strippers*

| | | |
|---|---|---|
| | | |
| | | RENAULT EM24.54.300 |
| | | |

AZOL GAS

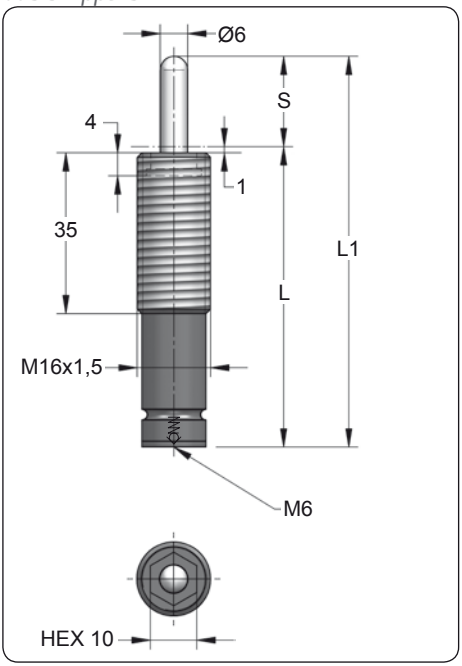


| CODE | S (mm) | L1 ±0,25 (mm) | L (mm) | Kg. |
|---|---|---|---|---|
| EFGC 16 ___ 010 | 10 | 65 | 55 | 0.06 |
| EFGC 16 ___ 020 | 20 | 85 | 65 | 0.07 |
| EFGC 16 ___ 030 | 30 | 105 | 75 | 0.07 |
| EFGC 16 ___ 040 | 40 | 125 | 85 | 0.08 |
| EFGC 16 ___ 050 | 50 | 145 | 95 | 0.09 |
| EFGC 16 ___ 060 | 60 | 165 | 105 | 0.09 |
| EFGC 16 ___ 070 | 70 | 185 | 115 | 0.10 |
| EFGC 16 ___ 080 | 80 | 205 | 125 | 0.10 |
| EFGC 16 ___ 100 | 100 | 245 | 145 | 0.12 |
| EFGC 16 ___ 125 | 125 | 295 | 170 | 0.13 |

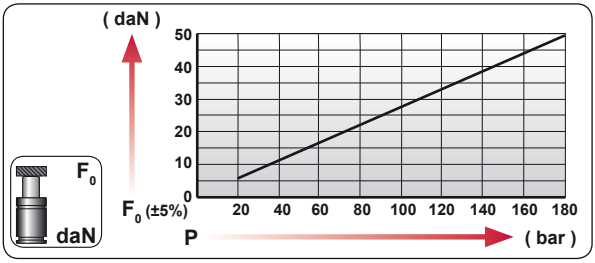


| CODE | COLOR | bar | psi | $F_0$ daN | $F_1$ daN |
|---|---|---|---|---|---|
| EFGC 16 6 050 | Green | 20 | 290 | 6 | 8 |
| EFGC 16 11 050 | Blue | 40 | 580 | 11 | 15 |
| EFGC 16 21 050 | Red | 75 | 1090 | 21 | 30 |
| EFGC 16 42 050 | Yellow | 150 | 2175 | 42 | 55 |
| EFGC 16 XX 050 | Black | 20-180 | 290-2610 | 6 - 50 | 8 - 70 |

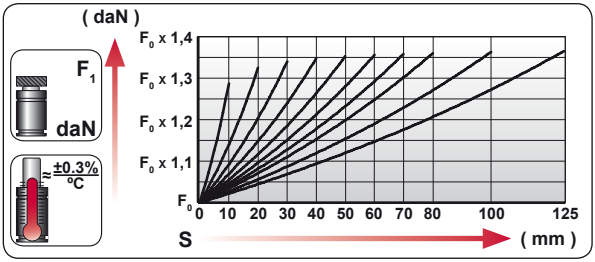


| | |
|---|---|
| ENG | ORDER |
| DEU | BESTELLUNG |
| FRA | COMMANDE |
| ITA | ORDINE |
| ESP | PEDIDO |
| POR | PEDIDO |

$F_0$ daN — S mm

EFGC 16 50 50

EFGC 16 50 050

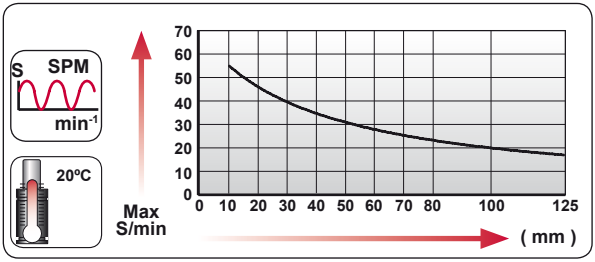


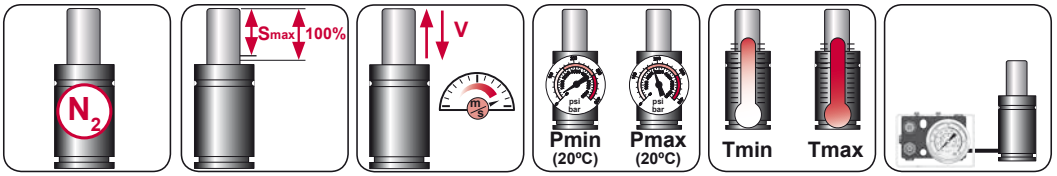


| $N_2$ | Smax < 90% | Vmax 1,6 m/s | bar psi 20 290 | bar psi 180 2610 | ºC ºF 0 32 | ºC ºF 80 176 | |
|---|---|---|---|---|---|---|---|

AZOL GAS

# EFGC 16

Gas Strippers

## LPT 10

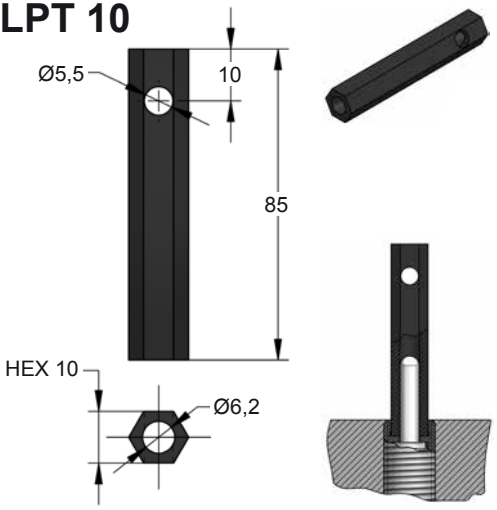


## E23-016

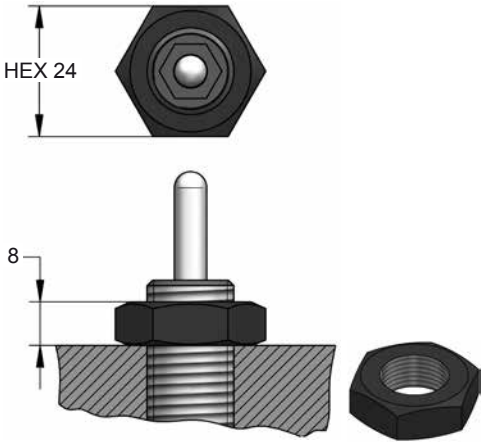









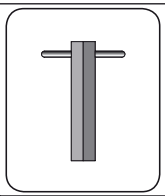

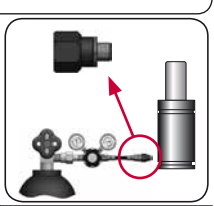

| CODE | | EFGC 16 50 050 | X | LPT 10 | 06 GA 11 |
|---|---|---|---|---|---|
| ENG | ORDER | GAS SPRING | REPAIR KIT | KEY | CHARGING ADAPTER |
| DEU | BESTELLUNG | GASDRUCKFEDER | ERSATZTEILSATZ | MONTAGESCHLÜSSEL | LADEADAPTER |
| FRA | COMMANDE | RESSORT À GAZ | KIT DE RÉPARATION | CLE | RACCORD DE CHARGE |
| ITA | ORDINE | CILINDRO AD AZOTO | KIT DI MANUTENZIONE | CHIAVE | ADATTATORE DI CARICO |
| ESP | PEDIDO | RESORTE DE GAS | KIT DE REPARACION | LLAVE | ADAPTADOR DE CARGA |
| POR | PEDIDO | CILINDRO DE GÁS | KIT DE MANUTENÇÃO | CHAVE | ADAPTADOR DE CARGA |

# EFGD 16

*Gas Strippers*

AZOL GAS

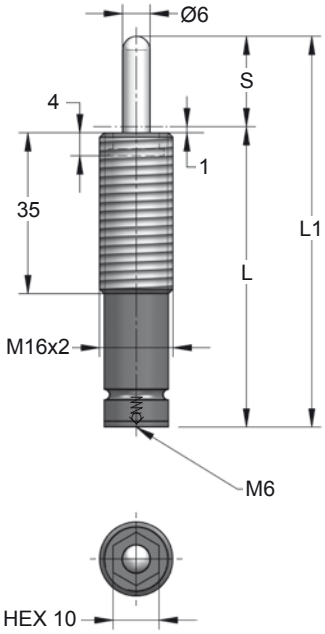


| CODE | S (mm) | L1 ±0,25 (mm) | L (mm) | Kg. |
|---|---|---|---|---|
| EFGD 16 ___ 010 | 10 | 65 | 55 | 0.06 |
| EFGD 16 ___ 020 | 20 | 85 | 65 | 0.07 |
| EFGD 16 ___ 030 | 30 | 105 | 75 | 0.07 |
| EFGD 16 ___ 040 | 40 | 125 | 85 | 0.08 |
| EFGD 16 ___ 050 | 50 | 145 | 95 | 0.09 |
| EFGD 16 ___ 060 | 60 | 165 | 105 | 0.09 |
| EFGD 16 ___ 070 | 70 | 185 | 115 | 0.10 |
| EFGD 16 ___ 080 | 80 | 205 | 125 | 0.10 |
| EFGD 16 ___ 100 | 100 | 245 | 145 | 0.12 |
| EFGD 16 ___ 125 | 125 | 295 | 170 | 0.13 |

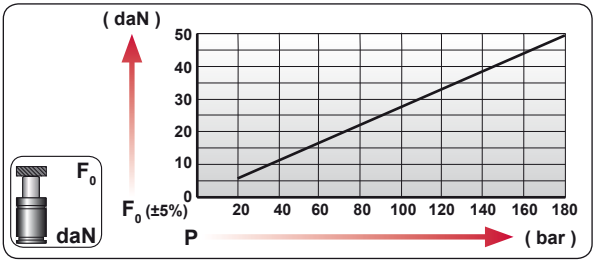


| CODE | COLOR | bar | psi | $F_0$ daN | $F_1$ daN |
|---|---|---|---|---|---|
| EFGD 16 6 050 | Green | 20 | 290 | 6 | 8 |
| EFGD 16 11 050 | Blue | 40 | 580 | 11 | 15 |
| EFGD 16 21 050 | Red | 75 | 1090 | 21 | 30 |
| EFGD 16 42 050 | Yellow | 150 | 2175 | 42 | 55 |
| EFGD 16 XX 050 | Black | 20-180 | 290-2610 | 6 - 50 | 8 - 70 |

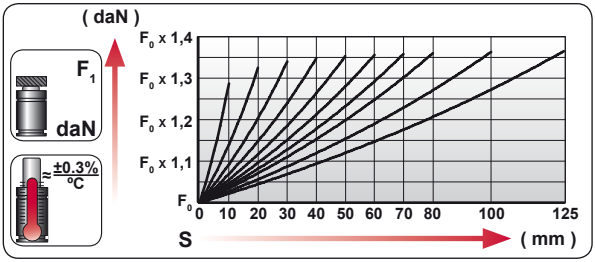


| | |
|---|---|
| ENG | ORDER |
| DEU | BESTELLUNG |
| FRA | COMMANDE |
| ITA | ORDINE |
| ESP | PEDIDO |
| POR | PEDIDO |

$F_0$ daN — S mm

EFGD 16 50 50

EFGD 16 50 050

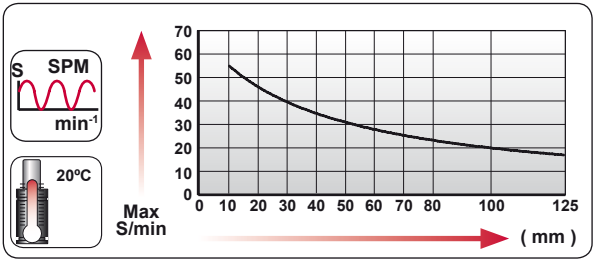


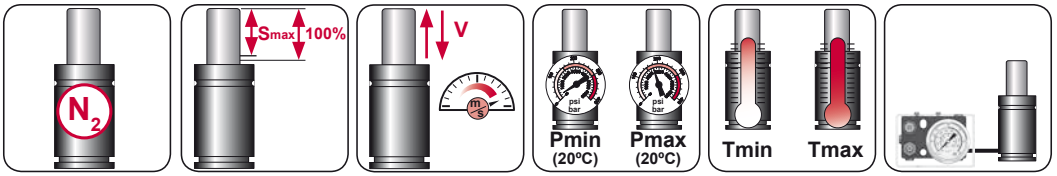


| $N_2$ | Smax < 90% | Vmax 1,6 m/s | bar psi 20 290 | bar psi 180 2610 | ºC ºF 0 32 | ºC ºF 80 176 |
|---|---|---|---|---|---|---|

AZOL GAS

# EFGD 16
Gas Strippers

## LPT 10

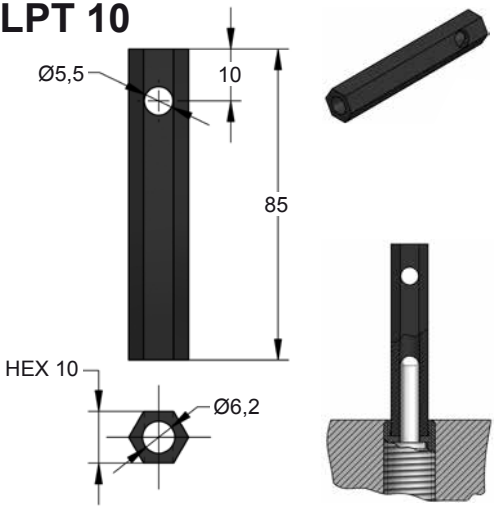


## E63-016

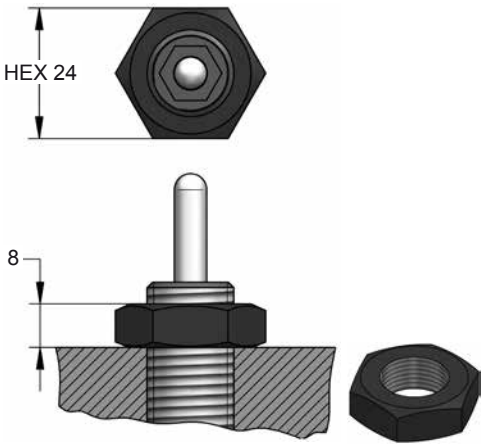









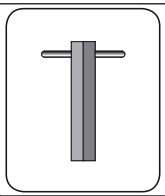

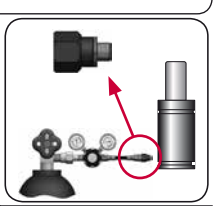

| CODE | | EFGD 16 50 050 | | LPT 10 | 06 GA 11 |
|---|---|---|---|---|---|
| ENG | ORDER | GAS SPRING | REPAIR KIT | KEY | CHARGING ADAPTER |
| DEU | BESTELLUNG | GASDRUCKFEDER | ERSATZTEILSATZ | MONTAGESCHLÜSSEL | LADEADAPTER |
| FRA | COMMANDE | RESSORT À GAZ | KIT DE RÉPARATION | CLE | RACCORD DE CHARGE |
| ITA | ORDINE | CILINDRO AD AZOTO | KIT DI MANUTENZIONE | CHIAVE | ADATTATORE DI CARICO |
| ESP | PEDIDO | RESORTE DE GAS | KIT DE REPARACION | LLAVE | ADAPTADOR DE CARGA |
| POR | PEDIDO | CILINDRO DE GÁS | KIT DE MANUTENÇÃO | CHAVE | ADAPTADOR DE CARGA |

# EFGL 16

*Gas Strippers*

AZOL GAS

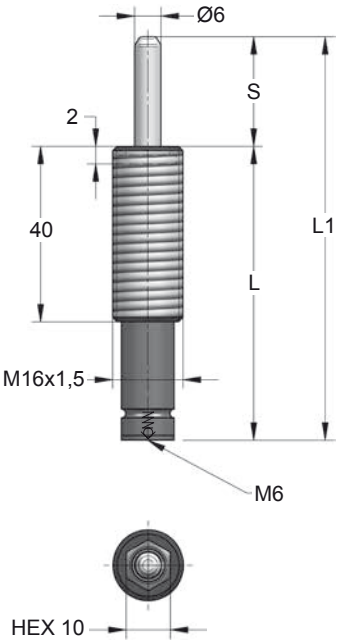


| CODE | S (mm) | L1 ±0,25 (mm) | L (mm) | Kg. |
|---|---|---|---|---|
| EFGL 16 ... 007 | 7 | 56 | 49 | 0.06 |
| EFGL 16 ... 010 | 10 | 62 | 52 | 0.06 |
| EFGL 16 ... 012 | 12.7 | 67.4 | 54.7 | 0.06 |
| EFGL 16 ... 015 | 15 | 72 | 57 | 0.07 |
| EFGL 16 ... 025 | 25 | 92 | 67 | 0.07 |
| EFGL 16 ... 038 | 38 | 118 | 80 | 0.08 |
| EFGL 16 ... 050 | 50 | 142 | 92 | 0.09 |
| EFGL 16 ... 063 | 63.5 | 172 | 108.5 | 0.09 |
| EFGL 16 ... 080 | 80 | 205 | 125 | 0.10 |

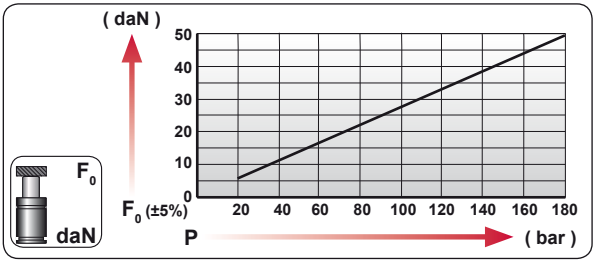


| CODE | COLOR | bar | psi | F0 daN | F1 daN |
|---|---|---|---|---|---|
| EFGL 16 13 050 | Green | 45 | 650 | 13 | 20 |
| EFGL 16 25 050 | Blue | 90 | 1305 | 25 | 40 |
| EFGL 16 38 050 | Red | 135 | 1960 | 38 | 60 |
| EFGL 16 50 050 | Yellow | 180 | 2610 | 50 | 80 |
| EFGL 16 XX 050 | Black | 20-180 | 290-2610 | 6 - 50 | 8 - 80 |

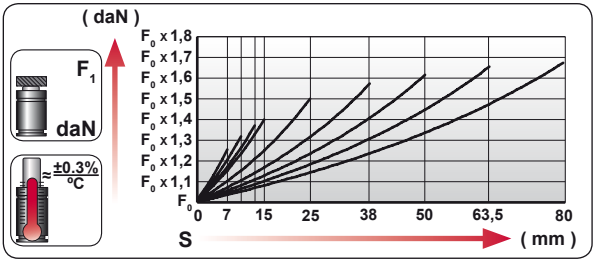


| | |
|---|---|
| ENG | ORDER |
| DEU | BESTELLUNG |
| FRA | COMMANDE |
| ITA | ORDINE |
| ESP | PEDIDO |
| POR | PEDIDO |

F0 daN — S mm

EFGL 16 50 50

EFGL 16 50 050

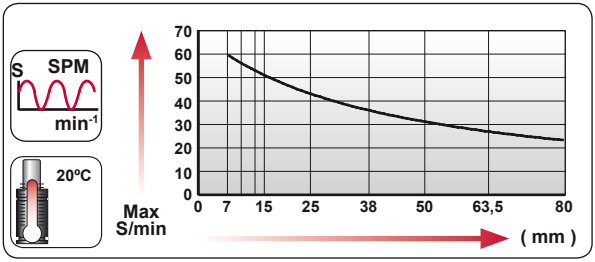


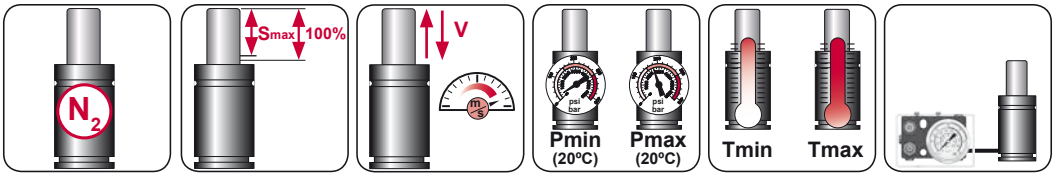


| $N_2$ | Smax < 90% | Vmax 1,6 m/s | bar psi 20 290 | bar psi 180 2610 | °C °F 0 32 | °C °F 80 176 |
|---|---|---|---|---|---|---|

AZOL GAS

# EFGL 16
Gas Strippers

## LPT 10

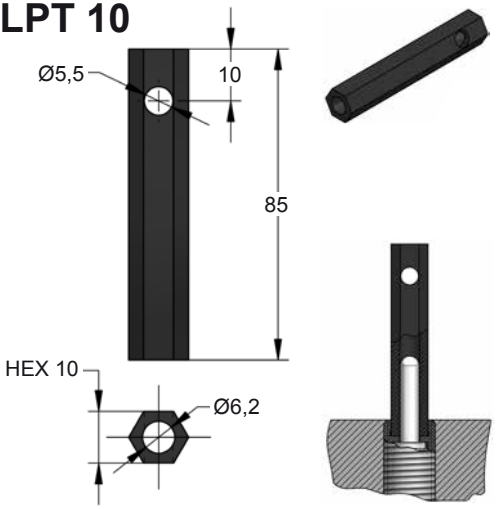


## E23-016

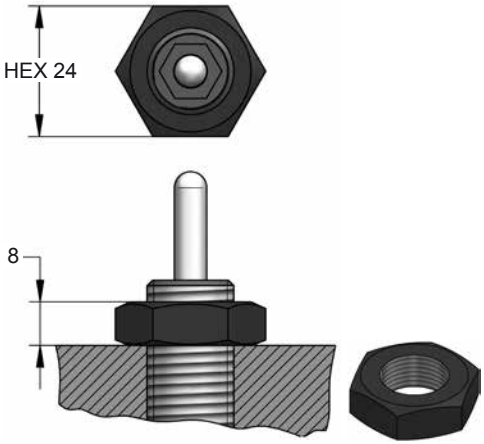









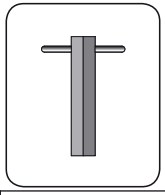

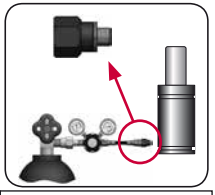

| CODE | | EFGL 16 50 050 | | LPT 10 | 06 GA 11 |
|---|---|---|---|---|---|
| ENG | ORDER | GAS SPRING | REPAIR KIT | KEY | CHARGING ADAPTER |
| DEU | BESTELLUNG | GASDRUCKFEDER | ERSATZTEILSATZ | MONTAGESCHLÜSSEL | LADEADAPTER |
| FRA | COMMANDE | RESSORT À GAZ | KIT DE RÉPARATION | CLE | RACCORD DE CHARGE |
| ITA | ORDINE | CILINDRO AD AZOTO | KIT DI MANUTENZIONE | CHIAVE | ADATTATORE DI CARICO |
| ESP | PEDIDO | RESORTE DE GAS | KIT DE REPARACION | LLAVE | ADAPTADOR DE CARGA |
| POR | PEDIDO | CILINDRO DE GÁS | KIT DE MANUTENÇÃO | CHAVE | ADAPTADOR DE CARGA |

# EFGQ 16

*Gas Strippers*

| | | |
|---|---|---|
| | FORD W-DX35-8031 | |
| | | |
| | | |

AZOL GAS

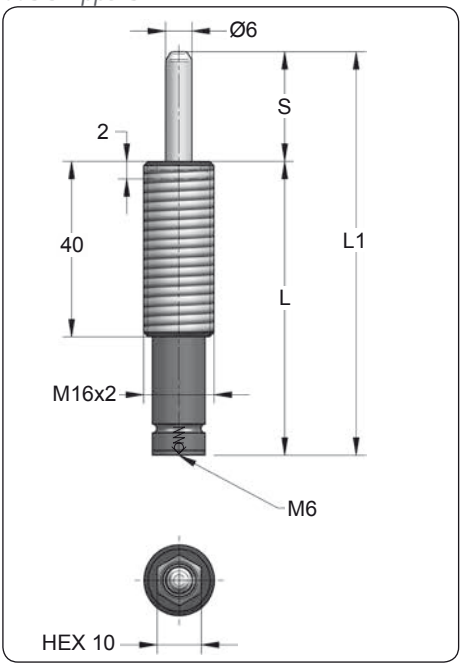


| CODE | S (mm) | L1 ±0,25 (mm) | L (mm) | Kg. |
|---|---|---|---|---|
| EFGQ 16 ___ 007 | 7 | 56 | 49 | 0.06 |
| EFGQ 16 ___ 010 | 10 | 62 | 52 | 0.06 |
| EFGQ 16 ___ 012 | 12.7 | 67.4 | 54.7 | 0.06 |
| EFGQ 16 ___ 015 | 15 | 72 | 57 | 0.07 |
| EFGQ 16 ___ 025 | 25 | 92 | 67 | 0.07 |
| EFGQ 16 ___ 038 | 38 | 118 | 80 | 0.08 |
| EFGQ 16 ___ 050 | 50 | 142 | 92 | 0.09 |
| EFGQ 16 ___ 063 | 63.5 | 172 | 108.5 | 0.09 |
| EFGQ 16 ___ 080 | 80 | 205 | 125 | 0.10 |

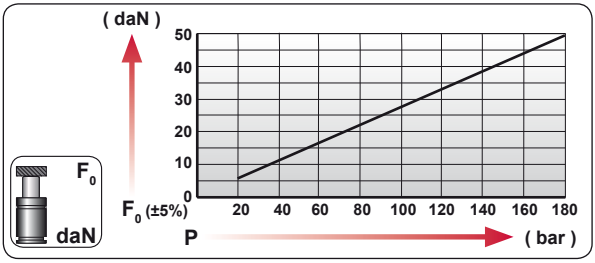


| CODE | COLOR | bar | psi | F0 daN | F1 daN |
|---|---|---|---|---|---|
| EFGQ 16 13 050 | Green | 45 | 650 | 13 | 20 |
| EFGQ 16 25 050 | Blue | 90 | 1305 | 25 | 40 |
| EFGQ 16 38 050 | Red | 135 | 1960 | 38 | 60 |
| EFGQ 16 50 050 | Yellow | 180 | 2610 | 50 | 80 |
| EFGQ 16 XX 050 | Black | 20-180 | 290-2610 | 6 - 50 | 8 - 80 |

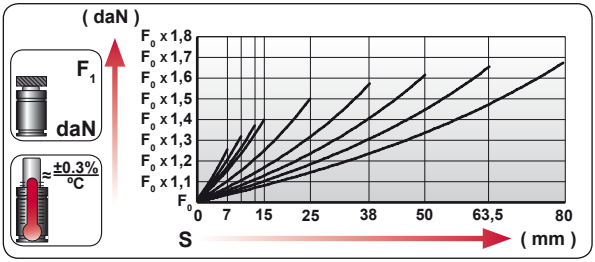


| | |
|---|---|
| ENG | ORDER |
| DEU | BESTELLUNG |
| FRA | COMMANDE |
| ITA | ORDINE |
| ESP | PEDIDO |
| POR | PEDIDO |

F0 daN — S mm

EFGQ 16 50 50

EFGQ 16 50 050

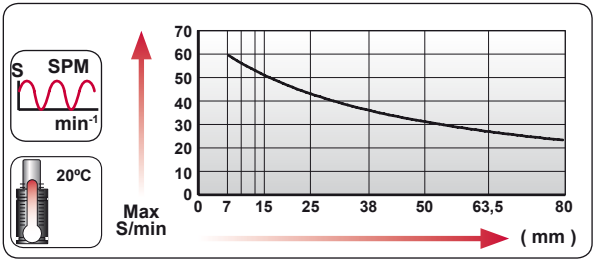


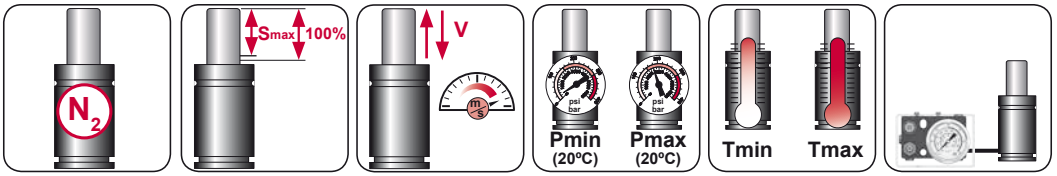


| $N_2$ | Smax < 90% | Vmax 1,6 m/s | bar psi 20 290 | bar psi 180 2610 | °C °F 0 32 | °C °F 80 176 | |
|---|---|---|---|---|---|---|---|

AZOL GAS

# EFGQ 16
Gas Strippers

## LPT 10

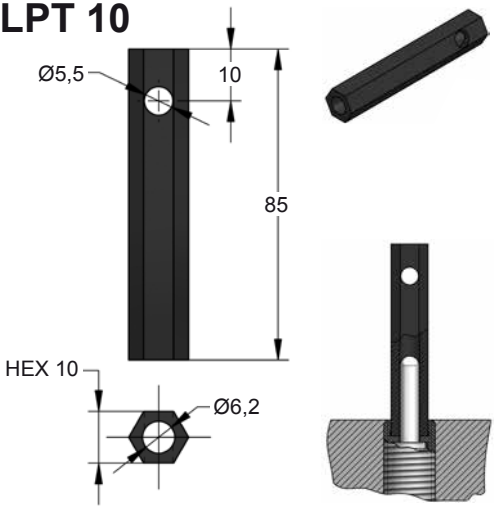


## E63-016

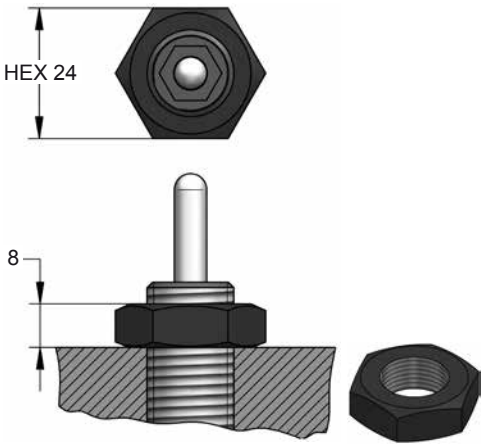









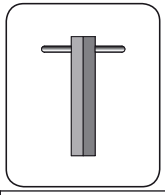

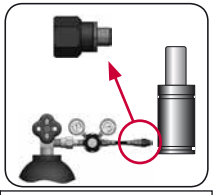

| CODE | | EFGQ 16 50 050 | X | LPT 10 | 06 GA 11 |
|---|---|---|---|---|---|
| ENG | ORDER | GAS SPRING | REPAIR KIT | KEY | CHARGING ADAPTER |
| DEU | BESTELLUNG | GASDRUCKFEDER | ERSATZTEILSATZ | MONTAGESCHLÜSSEL | LADEADAPTER |
| FRA | COMMANDE | RESSORT À GAZ | KIT DE RÉPARATION | CLE | RACCORD DE CHARGE |
| ITA | ORDINE | CILINDRO AD AZOTO | KIT DI MANUTENZIONE | CHIAVE | ADATTATORE DI CARICO |
| ESP | PEDIDO | RESORTE DE GAS | KIT DE REPARACION | LLAVE | ADAPTADOR DE CARGA |
| POR | PEDIDO | CILINDRO DE GÁS | KIT DE MANUTENÇÃO | CHAVE | ADAPTADOR DE CARGA |

# EFT 16

*Gas Strippers*

| | | |
|---|---|---|
| | GM 90.80 | |

AZOL GAS

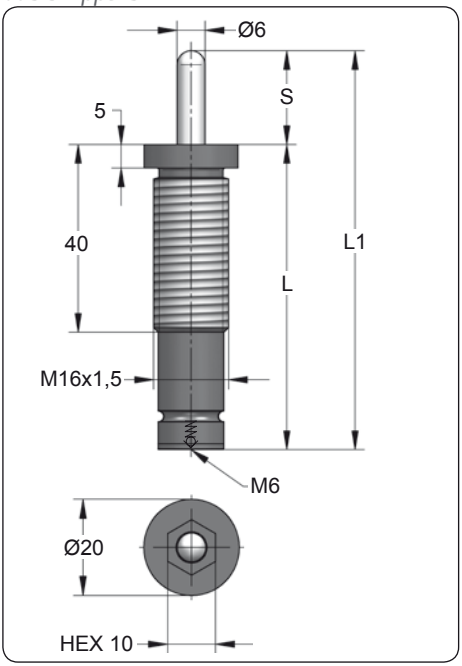


| CODE | S (mm) | L1 ±0,25 (mm) | L (mm) | Kg. |
|---|---|---|---|---|
| EFT 16 ___ 010 | 10 | 65 | 55 | 0.07 |
| EFT 16 ___ 015 | 15 | 75 | 60 | 0.07 |
| EFT 16 ___ 020 | 20 | 85 | 65 | 0.08 |
| EFT 16 ___ 025 | 25 | 95 | 70 | 0.08 |
| EFT 16 ___ 030 | 30 | 105 | 75 | 0.08 |
| EFT 16 ___ 040 | 40 | 125 | 85 | 0.09 |
| EFT 16 ___ 050 | 50 | 145 | 95 | 0.09 |
| EFT 16 ___ 060 | 60 | 165 | 105 | 0.10 |
| EFT 16 ___ 070 | 70 | 185 | 115 | 0.11 |
| EFT 16 ___ 080 | 80 | 205 | 125 | 0.11 |
| EFT 16 ___ 100 | 100 | 245 | 145 | 0.13 |
| EFT 16 ___ 125 | 125 | 295 | 170 | 0.14 |

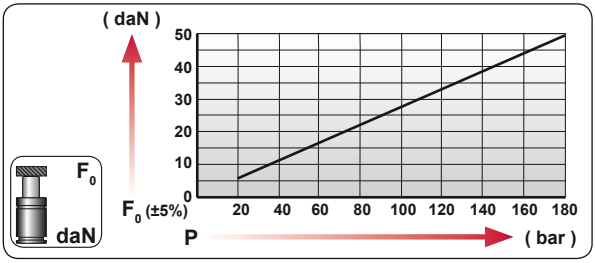


| CODE | COLOR | bar | psi | F0 daN | F1 daN |
|---|---|---|---|---|---|
| EFT 16 6 050 | Green | 20 | 290 | 6 | 8 |
| EFT 16 11 050 | Blue | 40 | 580 | 11 | 15 |
| EFT 16 21 050 | Red | 75 | 1090 | 21 | 30 |
| EFT 16 42 050 | Yellow | 150 | 2175 | 42 | 55 |
| EFT 16 XX 050 | Black | 20-180 | 290-2610 | 6 - 50 | 8 - 70 |

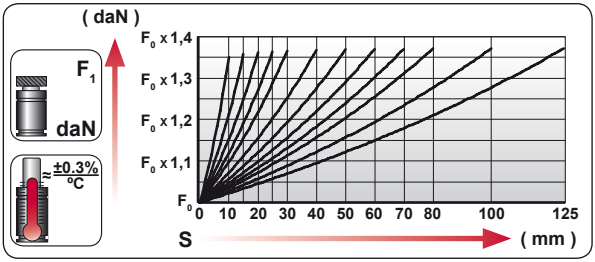


| | |
|---|---|
| ENG | ORDER |
| DEU | BESTELLUNG |
| FRA | COMMANDE |
| ITA | ORDINE |
| ESP | PEDIDO |
| POR | PEDIDO |

F0 daN — S mm

EFT 16 50 50

EFT 16 50 050

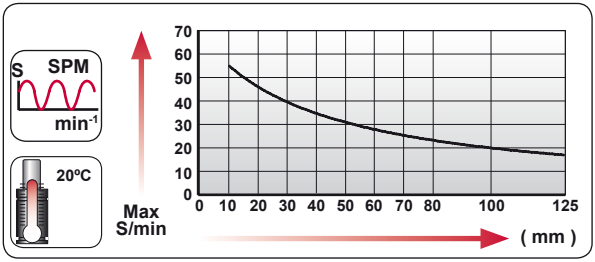


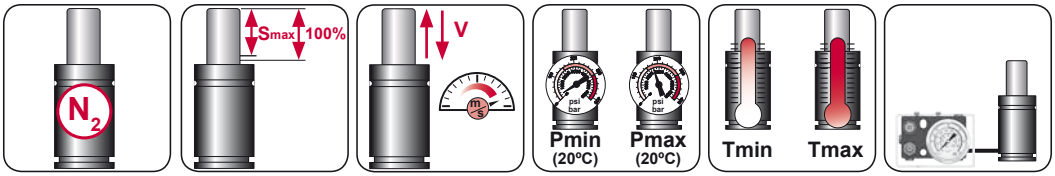


| $N_2$ | Smax < 90% | Vmax 1,6 m/s | bar psi 20 290 | bar psi 180 2610 | ºC ºF 0 32 | ºC ºF 80 176 | |
|---|---|---|---|---|---|---|---|

AZOL GAS

# EFT 16
Gas Strippers

## LPT 10

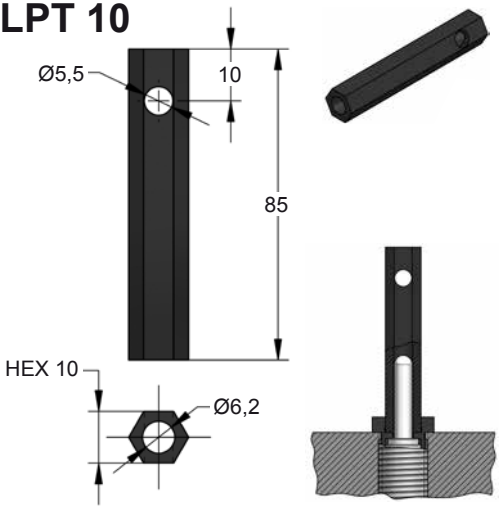




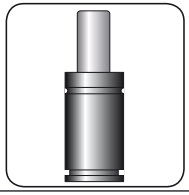




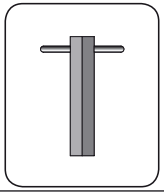

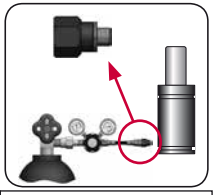

| CODE | | EFT 16 50 050 | | LPT 10 | 06 GA 11 |
|---|---|---|---|---|---|
| ENG | ORDER | GAS SPRING | REPAIR KIT | KEY | CHARGING ADAPTER |
| DEU | BESTELLUNG | GASDRUCKFEDER | ERSATZTEILSATZ | MONTAGESCHLÜSSEL | LADEADAPTER |
| FRA | COMMANDE | RESSORT À GAZ | KIT DE RÉPARATION | CLE | RACCORD DE CHARGE |
| ITA | ORDINE | CILINDRO AD AZOTO | KIT DI MANUTENZIONE | CHIAVE | ADATTATORE DI CARICO |
| ESP | PEDIDO | RESORTE DE GAS | KIT DE REPARACION | LLAVE | ADAPTADOR DE CARGA |
| POR | PEDIDO | CILINDRO DE GÁS | KIT DE MANUTENÇÃO | CHAVE | ADAPTADOR DE CARGA |

# EFV 16

*Gas Strippers*

AZOL GAS

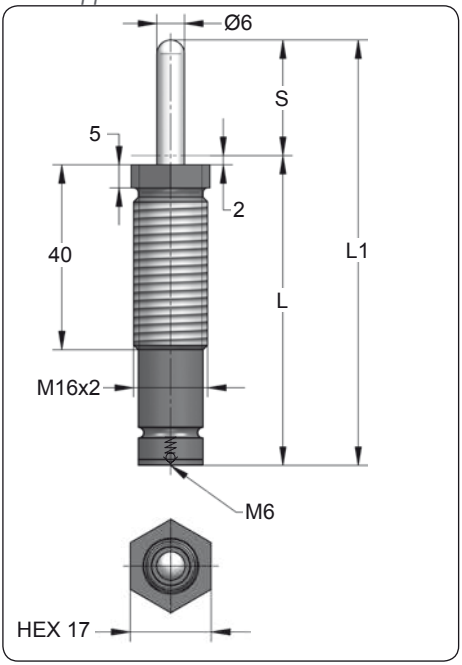


| CODE | S (mm) | L1 ±0,25 (mm) | L (mm) | Kg. |
|---|---|---|---|---|
| EFV 16 ___ 007 | 7 | 56 | 49 | 0.06 |
| EFV 16 ___ 010 | 10 | 62 | 52 | 0.06 |
| EFV 16 ___ 012 | 12.7 | 67.4 | 54.7 | 0.06 |
| EFV 16 ___ 015 | 15 | 72 | 57 | 0.07 |
| EFV 16 ___ 025 | 25 | 92 | 67 | 0.07 |
| EFV 16 ___ 038 | 38 | 118 | 80 | 0.08 |
| EFV 16 ___ 050 | 50 | 142 | 92 | 0.09 |
| EFV 16 ___ 063 | 63.5 | 172 | 108.5 | 0.10 |
| EFV 16 ___ 080 | 80 | 205 | 125 | 0.11 |

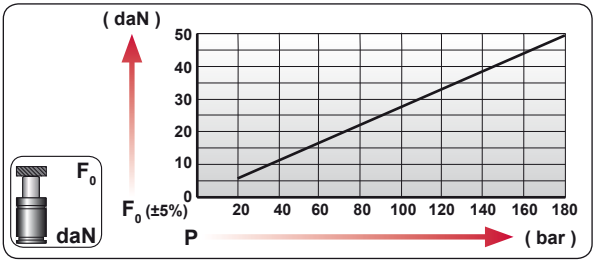


| CODE | COLOR | bar | psi | $F_0$ daN | $F_1$ daN |
|---|---|---|---|---|---|
| EFV 16 13 050 | Green | 45 | 650 | 13 | 20 |
| EFV 16 25 050 | Blue | 90 | 1305 | 25 | 40 |
| EFV 16 38 050 | Red | 135 | 1960 | 38 | 60 |
| EFV 16 50 050 | Yellow | 180 | 2610 | 50 | 80 |
| EFV 16 XX 050 | Black | 20-180 | 290-2610 | 6 - 50 | 8 - 80 |

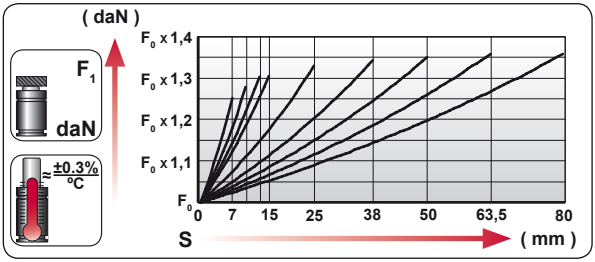


| | |
|---|---|
| ENG | ORDER |
| DEU | BESTELLUNG |
| FRA | COMMANDE |
| ITA | ORDINE |
| ESP | PEDIDO |
| POR | PEDIDO |




EFV 16 50 50

EFV 16 50 050

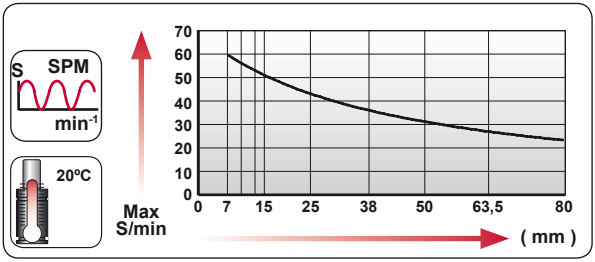


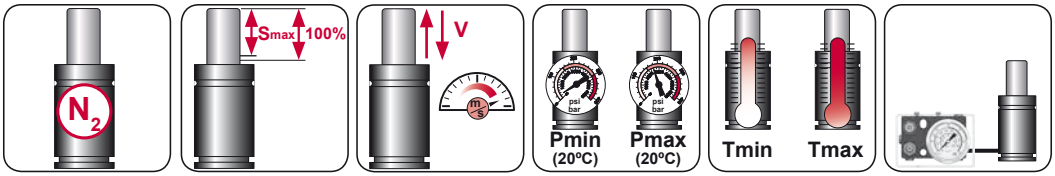


| $N_2$ | Smax < 90% | Vmax 1,6 m/s | bar psi 20 290 | bar psi 180 2610 | ºC ºF 0 32 | ºC ºF 80 176 | |
|---|---|---|---|---|---|---|---|

AZOL GAS

# EFV 16
Gas Strippers

## LPV 16-17

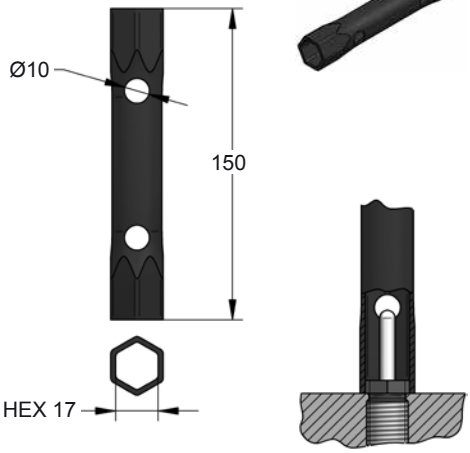









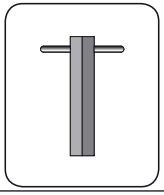

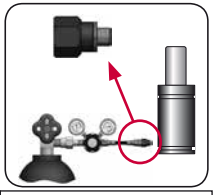

| CODE | | EFV 16 50 050 | X | LPV 16-17 | 06 GA 11 |
|---|---|---|---|---|---|
| ENG | ORDER | GAS SPRING | REPAIR KIT | KEY | CHARGING ADAPTER |
| DEU | BESTELLUNG | GASDRUCKFEDER | ERSATZTEILSATZ | MONTAGESCHLÜSSEL | LADEADAPTER |
| FRA | COMMANDE | RESSORT À GAZ | KIT DE RÉPARATION | CLE | RACCORD DE CHARGE |
| ITA | ORDINE | CILINDRO AD AZOTO | KIT DI MANUTENZIONE | CHIAVE | ADATTATORE DI CARICO |
| ESP | PEDIDO | RESORTE DE GAS | KIT DE REPARACION | LLAVE | ADAPTADOR DE CARGA |
| POR | PEDIDO | CILINDRO DE GÁS | KIT DE MANUTENÇÃO | CHAVE | ADAPTADOR DE CARGA |

# EFG 24

*Gas Strippers*

| | | | | |
|---|---|---|---|---|
| | | FORD | W-DX35-6030 | |
| MB | B8 0820 100 000 002 | GM | 90.25 | |
| VW | 39D 549 | | | |

AZOL GAS

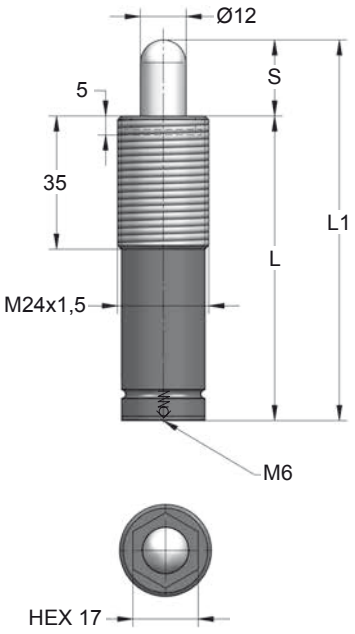


| CODE | S (mm) | L1 ±0,25 (mm) | L (mm) | Kg. |
|---|---|---|---|---|
| EFG 24 ___ 010 | 10 | 80 | 70 | 0.19 |
| EFG 24 ___ 020 | 20 | 100 | 80 | 0.21 |
| EFG 24 ___ 030 | 30 | 120 | 90 | 0.23 |
| EFG 24 ___ 040 | 40 | 140 | 100 | 0.25 |
| EFG 24 ___ 050 | 50 | 160 | 110 | 0.27 |
| EFG 24 ___ 060 | 60 | 180 | 120 | 0.29 |
| EFG 24 ___ 070 | 70 | 200 | 130 | 0.31 |
| EFG 24 ___ 080 | 80 | 220 | 140 | 0.32 |
| EFG 24 ___ 100 | 100 | 260 | 160 | 0.36 |

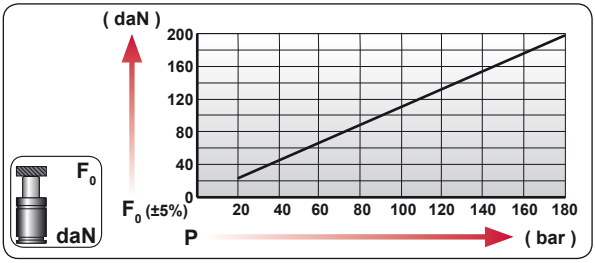


| CODE | COLOR | bar | psi | F0 daN | F1 daN |
|---|---|---|---|---|---|
| EFG 24 23 050 | Green | 20 | 290 | 23 | 40 |
| EFG 24 45 050 | Blue | 40 | 580 | 45 | 80 |
| EFG 24 85 050 | Red | 75 | 1090 | 85 | 150 |
| EFG 24 170 050 | Yellow | 150 | 2175 | 170 | 300 |
| EFG 24 XXX 050 | Black | 20-180 | 290-2610 | 23 - 200 | 40 - 355 |

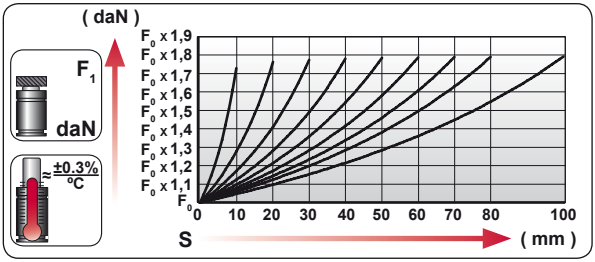


| | |
|---|---|
| ENG | ORDER |
| DEU | BESTELLUNG |
| FRA | COMMANDE |
| ITA | ORDINE |
| ESP | PEDIDO |
| POR | PEDIDO |

F0 daN — S mm

EFG 24 200 050

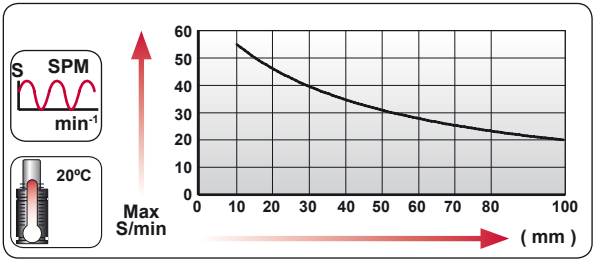


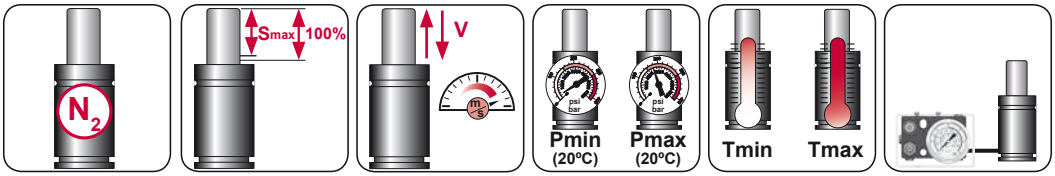


| $N_2$ | Smax < 90% | Vmax 1,6 m/s | bar psi 20 290 | bar psi 180 2610 | ºC ºF 0 32 | ºC ºF 80 176 | |
|---|---|---|---|---|---|---|---|

AZOL GAS

# EFG 24
Gas Strippers

## LPT 17




## E23-024

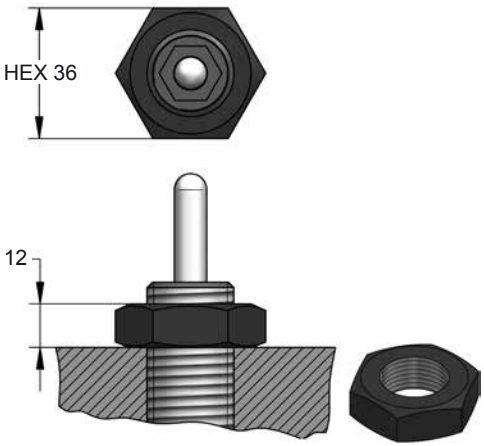









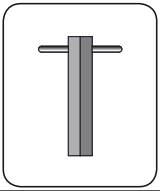

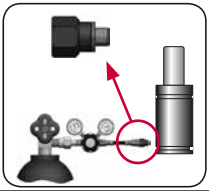

| CODE | | EFG 24 200 050 | | LPT 17 | 06 GA 11 |
|---|---|---|---|---|---|
| ENG | ORDER | GAS SPRING | REPAIR KIT | KEY | CHARGING ADAPTER |
| DEU | BESTELLUNG | GASDRUCKFEDER | ERSATZTEILSATZ | MONTAGESCHLÜSSEL | LADEADAPTER |
| FRA | COMMANDE | RESSORT À GAZ | KIT DE RÉPARATION | CLE | RACCORD DE CHARGE |
| ITA | ORDINE | CILINDRO AD AZOTO | KIT DI MANUTENZIONE | CHIAVE | ADATTATORE DI CARICO |
| ESP | PEDIDO | RESORTE DE GAS | KIT DE REPARACION | LLAVE | ADAPTADOR DE CARGA |
| POR | PEDIDO | CILINDRO DE GÁS | KIT DE MANUTENÇÃO | CHAVE | ADAPTADOR DE CARGA |

# EFGC 24

*Gas Strippers*

AZOL GAS

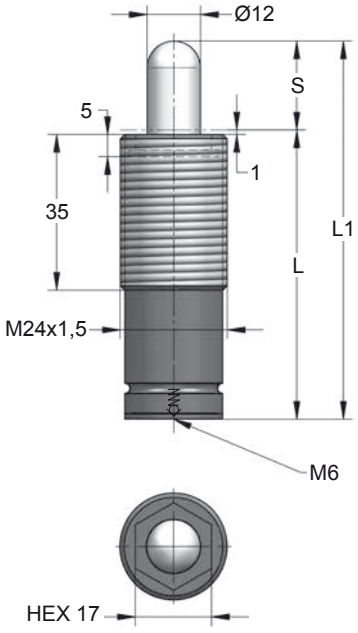


| CODE | S (mm) | L1 ±0,25 (mm) | L (mm) | Kg. |
|---|---|---|---|---|
| EFGC 24 ___ 010 | 10 | 65 | 55 | 0.15 |
| EFGC 24 ___ 020 | 20 | 85 | 65 | 0.17 |
| EFGC 24 ___ 030 | 30 | 105 | 75 | 0.18 |
| EFGC 24 ___ 040 | 40 | 125 | 85 | 0.20 |
| EFGC 24 ___ 050 | 50 | 145 | 95 | 0.22 |
| EFGC 24 ___ 060 | 60 | 165 | 105 | 0.24 |
| EFGC 24 ___ 070 | 70 | 185 | 115 | 0.26 |
| EFGC 24 ___ 080 | 80 | 205 | 125 | 0.28 |
| EFGC 24 ___ 100 | 100 | 245 | 145 | 0.32 |
| EFGC 24 ___ 125 | 125 | 295 | 170 | 0.36 |

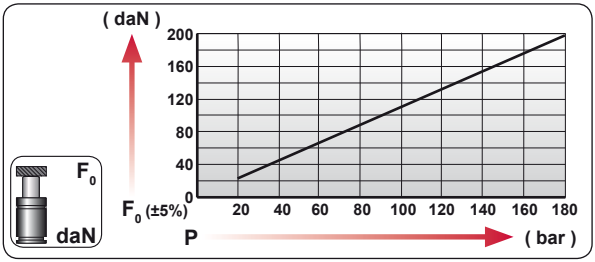


| CODE | COLOR | bar | psi | $F_0$ daN | $F_1$ daN |
|---|---|---|---|---|---|
| EFGC 24 23 050 | Green | 20 | 290 | 23 | 40 |
| EFGC 24 45 050 | Blue | 40 | 580 | 45 | 80 |
| EFGC 24 85 050 | Red | 75 | 1090 | 85 | 150 |
| EFGC 24 170 050 | Yellow | 150 | 2175 | 170 | 300 |
| EFGC 24 XXX 050 | Black | 20-180 | 290-2610 | 23 - 200 | 40 - 350 |

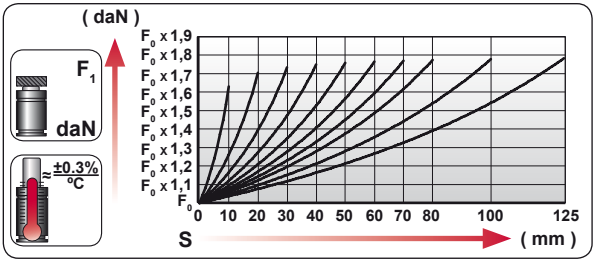


| | ENG | ORDER |
|---|---|---|
| | DEU | BESTELLUNG |
| | FRA | COMMANDE |
| | ITA | ORDINE |
| | ESP | PEDIDO |
| | POR | PEDIDO |

$F_0$ daN — S mm

EFGC 24 200 50

EFGC 24 200 050

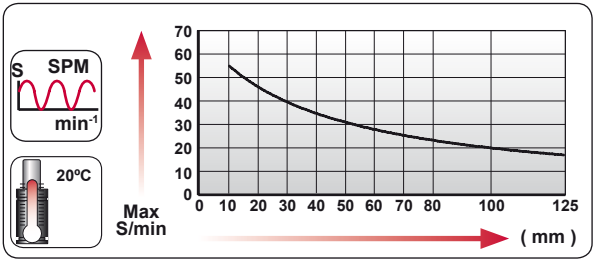


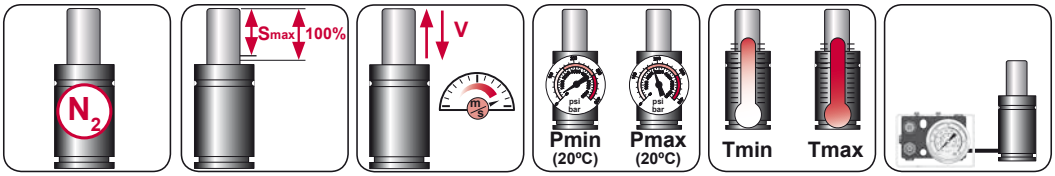


| $N_2$ | Smax < 90% | Vmax 1,6 m/s | bar psi 20 290 | bar psi 180 2610 | ºC ºF 0 32 | ºC ºF 80 176 | |
|---|---|---|---|---|---|---|---|

AZOL GAS

# EFGC 24
Gas Strippers

## LPT 17




## E23-024

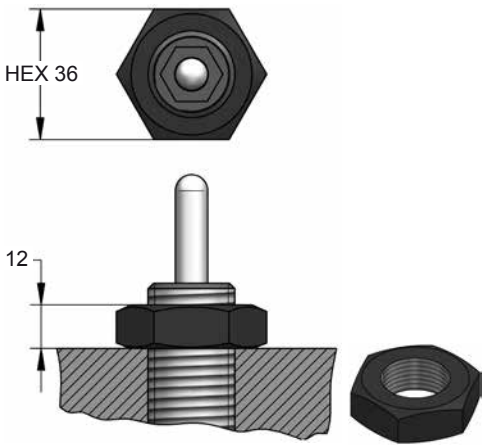









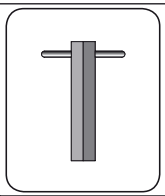

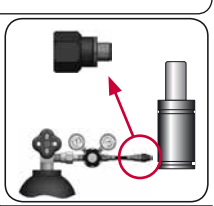

| CODE | | EFGC 24 200 050 | X | LPT 17 | 06 GA 11 |
|---|---|---|---|---|---|
| ENG | ORDER | GAS SPRING | REPAIR KIT | KEY | CHARGING ADAPTER |
| DEU | BESTELLUNG | GASDRUCKFEDER | ERSATZTEILSATZ | MONTAGESCHLÜSSEL | LADEADAPTER |
| FRA | COMMANDE | RESSORT À GAZ | KIT DE RÉPARATION | CLE | RACCORD DE CHARGE |
| ITA | ORDINE | CILINDRO AD AZOTO | KIT DI MANUTENZIONE | CHIAVE | ADATTATORE DI CARICO |
| ESP | PEDIDO | RESORTE DE GAS | KIT DE REPARACION | LLAVE | ADAPTADOR DE CARGA |
| POR | PEDIDO | CILINDRO DE GÁS | KIT DE MANUTENÇÃO | CHAVE | ADAPTADOR DE CARGA |

# EFGL 24

*Gas Strippers*

| | | |
|---|---|---|
| | FORD W-DX35-8018 | |
| | | |
| | | |

AZOL GAS

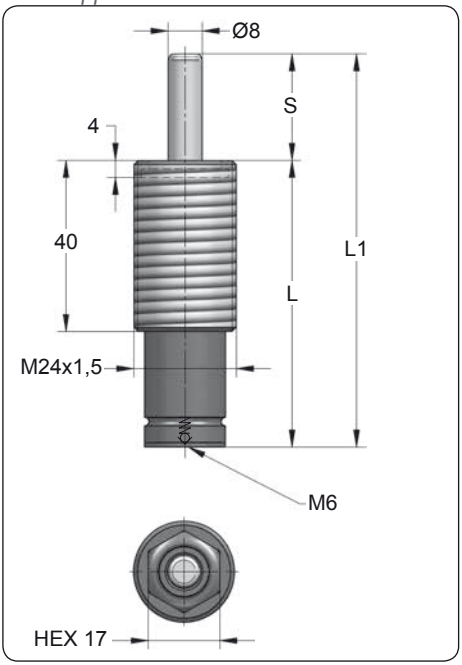


| CODE | S (mm) | L1 ±0,25 (mm) | L (mm) | Kg. |
|---|---|---|---|---|
| EFGL 24 ___ 007 | 7 | 56 | 49 | 0.12 |
| EFGL 24 ___ 010 | 10 | 62 | 52 | 0.12 |
| EFGL 24 ___ 012 | 12.7 | 67.4 | 54.7 | 0.13 |
| EFGL 24 ___ 015 | 15 | 72 | 57 | 0.13 |
| EFGL 24 ___ 025 | 25 | 92 | 67 | 0.15 |
| EFGL 24 ___ 038 | 38 | 118 | 80 | 0.16 |
| EFGL 24 ___ 050 | 50 | 142 | 92 | 0.17 |
| EFGL 24 ___ 063 | 63.5 | 172 | 109 | 0.19 |
| EFGL 24 ___ 080 | 80 | 205 | 125 | 0.21 |
| EFGL 24 ___ 100 | 100 | 245 | 145 | 0.23 |
| EFGL 24 ___ 125 | 125 | 295 | 170 | 0.26 |

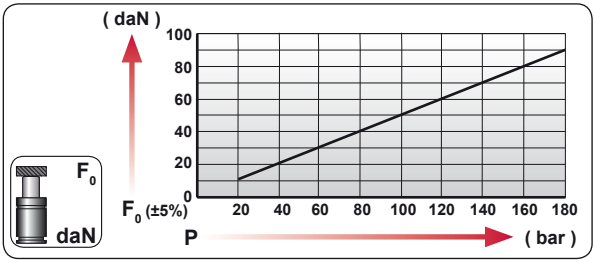


| CODE | COLOR | bar | psi | F0 daN | F1 daN |
|---|---|---|---|---|---|
| EFGL 24 30 050 | Green | 60 | 870 | 30 | 40 |
| EFGL 24 50 050 | Blue | 100 | 1450 | 50 | 65 |
| EFGL 24 70 050 | Red | 140 | 2030 | 70 | 95 |
| EFGL 24 90 050 | Yellow | 180 | 2610 | 90 | 120 |
| EFGL 24 XX 050 | Black | 20-180 | 290-2610 | 10 - 90 | 13 - 120 |

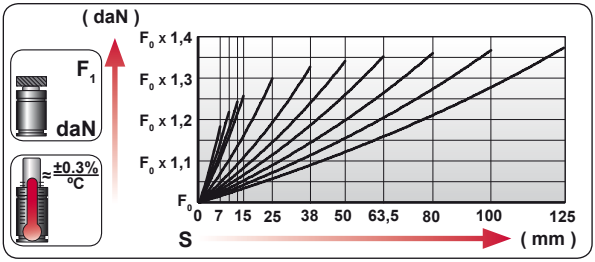


| | |
|---|---|
| ENG | ORDER |
| DEU | BESTELLUNG |
| FRA | COMMANDE |
| ITA | ORDINE |
| ESP | PEDIDO |
| POR | PEDIDO |

F0 daN — S mm

EFGL 24 90 50

EFGL 24 90 050

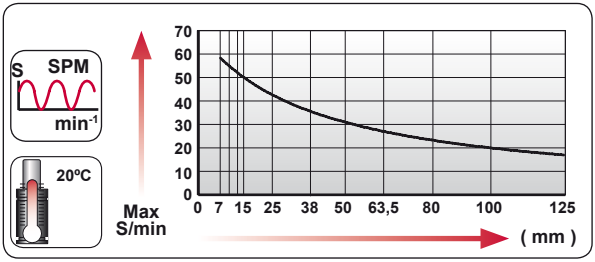


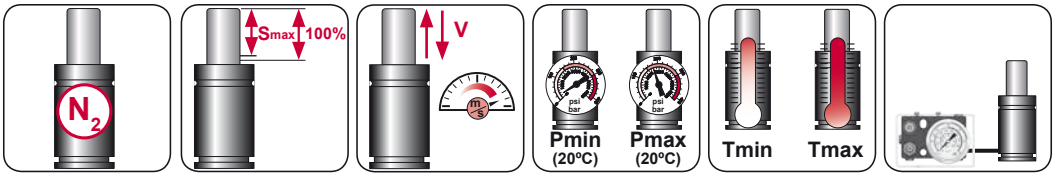


| $N_2$ | Smax < 90% | Vmax 1,6 m/s | bar psi 20 290 | bar psi 180 2610 | ºC ºF 0 32 | ºC ºF 80 176 | |
|---|---|---|---|---|---|---|---|

AZOL GAS

# EFGL 24
Gas Strippers

## LPT 17




## E23-024

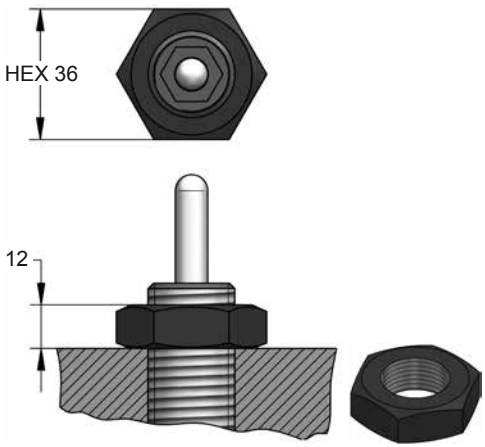









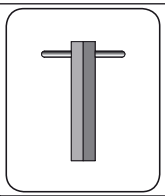

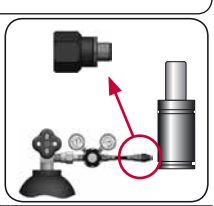

| CODE | | EFGL 24 90 050 | | LPT 17 | 06 GA 11 |
|---|---|---|---|---|---|
| ENG | ORDER | GAS SPRING | REPAIR KIT | KEY | CHARGING ADAPTER |
| DEU | BESTELLUNG | GASDRUCKFEDER | ERSATZTEILSATZ | MONTAGESCHLÜSSEL | LADEADAPTER |
| FRA | COMMANDE | RESSORT À GAZ | KIT DE RÉPARATION | CLE | RACCORD DE CHARGE |
| ITA | ORDINE | CILINDRO AD AZOTO | KIT DI MANUTENZIONE | CHIAVE | ADATTATORE DI CARICO |
| ESP | PEDIDO | RESORTE DE GAS | KIT DE REPARACION | LLAVE | ADAPTADOR DE CARGA |
| POR | PEDIDO | CILINDRO DE GÁS | KIT DE MANUTENÇÃO | CHAVE | ADAPTADOR DE CARGA |

# EFK 24

*Gas Strippers*

AZOL GAS

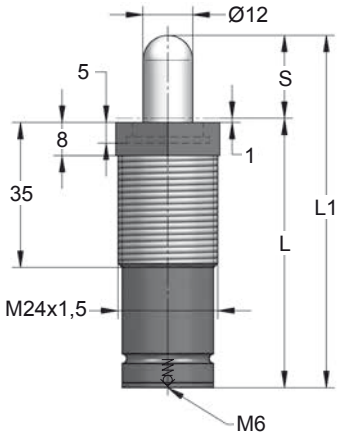


| CODE | S (mm) | L1 ±0,25 (mm) | L (mm) | Kg. |
|---|---|---|---|---|
| EFK 24 ___ 010 | 10 | 65 | 55 | 0.15 |
| EFK 24 ___ 016 | 16 | 77 | 61 | 0.16 |
| EFK 24 ___ 020 | 20 | 85 | 65 | 0.17 |
| EFK 24 ___ 025 | 25 | 95 | 70 | 0.18 |
| EFK 24 ___ 030 | 30 | 105 | 75 | 0.19 |
| EFK 24 ___ 038 | 38 | 121 | 83 | 0.21 |
| EFK 24 ___ 040 | 40 | 125 | 85 | 0.21 |
| EFK 24 ___ 050 | 50 | 145 | 95 | 0.23 |
| EFK 24 ___ 060 | 60 | 165 | 105 | 0.25 |
| EFK 24 ___ 070 | 70 | 185 | 115 | 0.27 |
| EFK 24 ___ 080 | 80 | 205 | 125 | 0.28 |
| EFK 24 ___ 100 | 100 | 245 | 145 | 0.32 |
| EFK 24 ___ 125 | 125 | 295 | 170 | 0.37 |

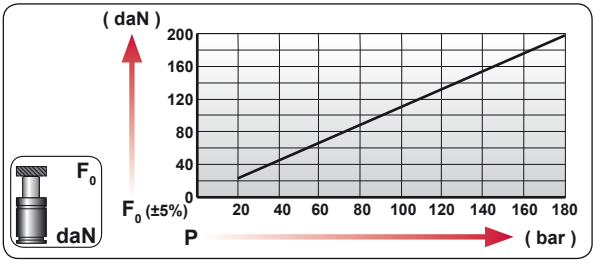


| CODE | COLOR | bar | psi | $F_0$ daN | $F_1$ daN |
|---|---|---|---|---|---|
| EFK 24 23 050 | Green | 20 | 290 | 23 | 40 |
| EFK 24 45 050 | Blue | 40 | 580 | 45 | 80 |
| EFK 24 85 050 | Red | 75 | 1090 | 85 | 150 |
| EFK 24 170 050 | Yellow | 150 | 2175 | 170 | 300 |
| EFK 24 XXX 050 | Black | 20-180 | 290-2610 | 23 - 200 | 40 - 355 |

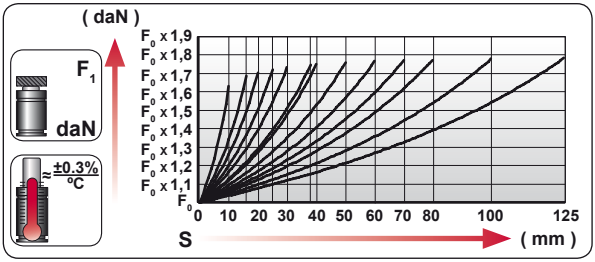


| | |
|---|---|
| ENG | ORDER |
| DEU | BESTELLUNG |
| FRA | COMMANDE |
| ITA | ORDINE |
| ESP | PEDIDO |
| POR | PEDIDO |

$F_0$ daN — S mm

EFK 24 200 050

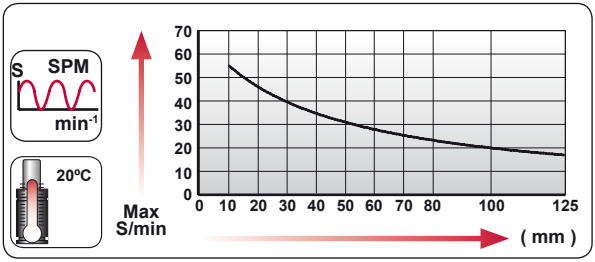


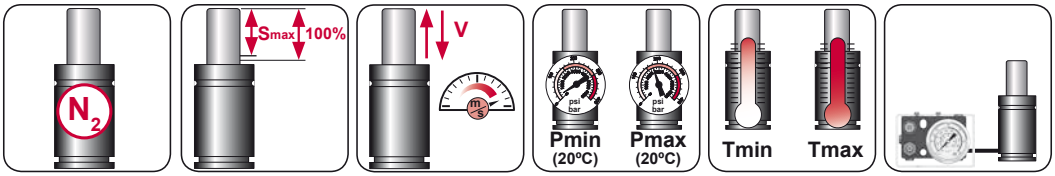


| $N_2$ | Smax < 90% | Vmax 1,6 m/s | bar psi 20 290 | bar psi 180 2610 | ºC ºF 0 32 | ºC ºF 80 176 | |
|---|---|---|---|---|---|---|---|

AZOL GAS

# EFK 24

Gas Strippers

## LPT 17




## LPV 25-28

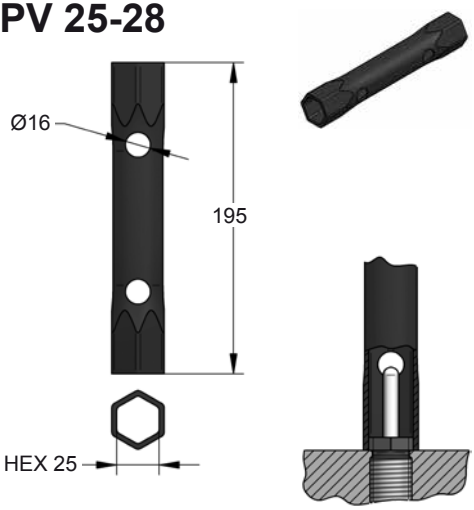









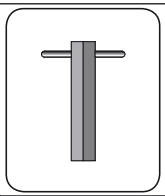

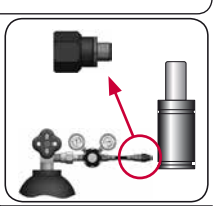

| CODE | | EFK 24 200 050 | | LPT 17 | 06 GA 11 |
|---|---|---|---|---|---|
| ENG | ORDER | GAS SPRING | REPAIR KIT | KEY | CHARGING ADAPTER |
| DEU | BESTELLUNG | GASDRUCKFEDER | ERSATZTEILSATZ | MONTAGESCHLÜSSEL | LADEADAPTER |
| FRA | COMMANDE | RESSORT À GAZ | KIT DE RÉPARATION | CLE | RACCORD DE CHARGE |
| ITA | ORDINE | CILINDRO AD AZOTO | KIT DI MANUTENZIONE | CHIAVE | ADATTATORE DI CARICO |
| ESP | PEDIDO | RESORTE DE GAS | KIT DE REPARACION | LLAVE | ADAPTADOR DE CARGA |
| POR | PEDIDO | CILINDRO DE GÁS | KIT DE MANUTENÇÃO | CHAVE | ADAPTADOR DE CARGA |

# EFV 24

*Gas Strippers*

AZOL GAS

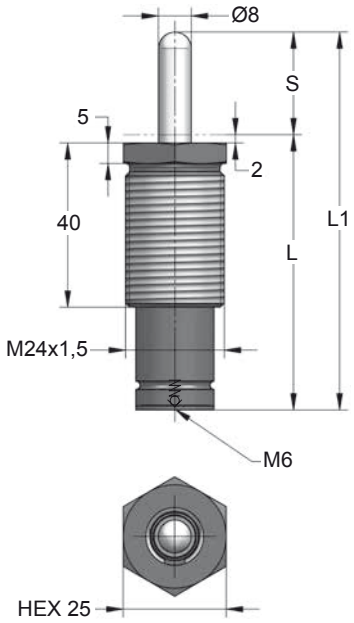


| CODE | S (mm) | L1 ±0,25 (mm) | L (mm) | Kg. |
|---|---|---|---|---|
| EFV 24 ___ 007 | 7 | 56 | 49 | 0.10 |
| EFV 24 ___ 010 | 10 | 62 | 52 | 0.11 |
| EFV 24 ___ 012 | 12.7 | 67.4 | 54.7 | 0.11 |
| EFV 24 ___ 015 | 15 | 72 | 57 | 0.12 |
| EFV 24 ___ 025 | 25 | 92 | 67 | 0.16 |
| EFV 24 ___ 038 | 38 | 118 | 80 | 0.15 |
| EFV 24 ___ 050 | 50 | 142 | 92 | 0.16 |
| EFV 24 ___ 063 | 63.5 | 172 | 108.5 | 0.19 |
| EFV 24 ___ 080 | 80 | 205 | 125 | 0.21 |
| EFV 24 ___ 100 | 100 | 245 | 145 | 0.27 |
| EFV 24 ___ 125 | 125 | 295 | 170 | 0.30 |

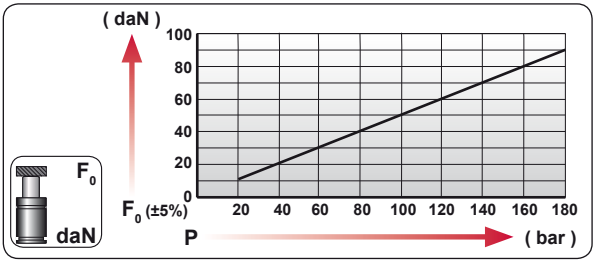


| CODE | COLOR | bar | psi | $F_0$ daN | $F_1$ daN |
|---|---|---|---|---|---|
| EFV 24 30 050 | Green | 60 | 870 | 30 | 40 |
| EFV 24 50 050 | Blue | 100 | 1450 | 50 | 65 |
| EFV 24 70 050 | Red | 140 | 2030 | 70 | 95 |
| EFV 24 90 050 | Yellow | 180 | 2610 | 90 | 120 |
| EFV 24 XX 050 | Black | 20-180 | 290-2610 | 10 - 90 | 13 - 120 |

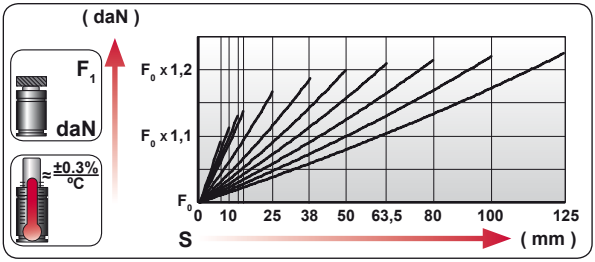


| | |
|---|---|
| ENG | ORDER |
| DEU | BESTELLUNG |
| FRA | COMMANDE |
| ITA | ORDINE |
| ESP | PEDIDO |
| POR | PEDIDO |

$F_0$ daN — S mm

EFV 24 90 50

EFV 24 90 050

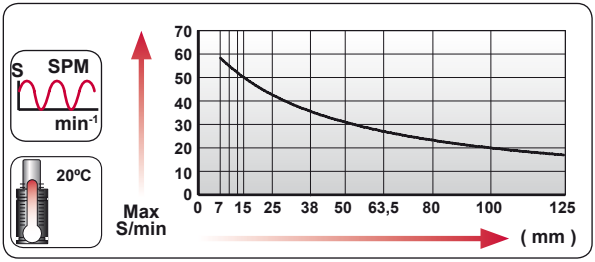


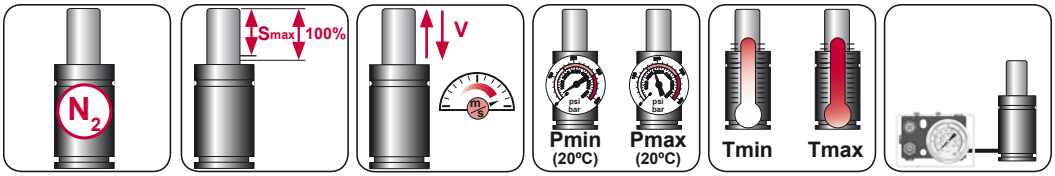


| $N_2$ | Smax < 90% | Vmax 1,6 m/s | bar psi 20 290 | bar psi 180 2610 | ºC ºF 0 32 | ºC ºF 80 176 | |
|---|---|---|---|---|---|---|---|

AZOL GAS

# EFV 24
Gas Strippers

## LPV 25-28

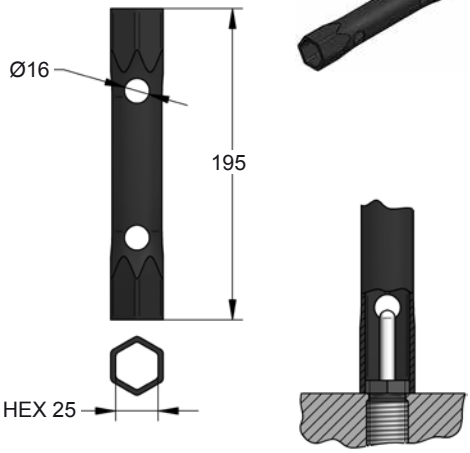









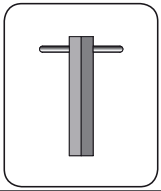

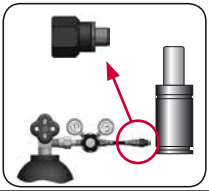

| CODE | | EFV 24 90 050 | X | LPV 25-28 | 06 GA 11 |
|---|---|---|---|---|---|
| ENG | ORDER | GAS SPRING | REPAIR KIT | KEY | CHARGING ADAPTER |
| DEU | BESTELLUNG | GASDRUCKFEDER | ERSATZTEILSATZ | MONTAGESCHLÜSSEL | LADEADAPTER |
| FRA | COMMANDE | RESSORT À GAZ | KIT DE RÉPARATION | CLE | RACCORD DE CHARGE |
| ITA | ORDINE | CILINDRO AD AZOTO | KIT DI MANUTENZIONE | CHIAVE | ADATTATORE DI CARICO |
| ESP | PEDIDO | RESORTE DE GAS | KIT DE REPARACION | LLAVE | ADAPTADOR DE CARGA |
| POR | PEDIDO | CILINDRO DE GÁS | KIT DE MANUTENÇÃO | CHAVE | ADAPTADOR DE CARGA |

# MBR
*Spring Plungers*

AZOL GAS

## MBR

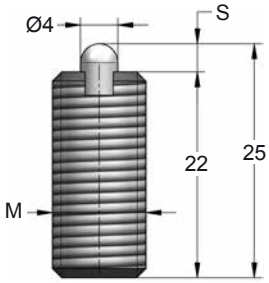






| ORDER | M | S (mm) | $F_0$ (N) | $F_1$ (N) | Key |
|---|---|---|---|---|---|
| MBR 10 003 | M10 | 3 | 25 | 70 | LP 10 |

PHASING OUT

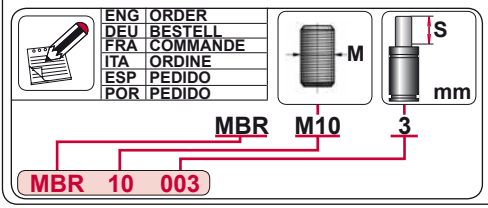


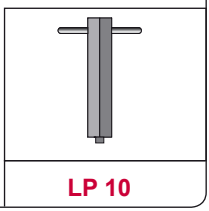


## MBR

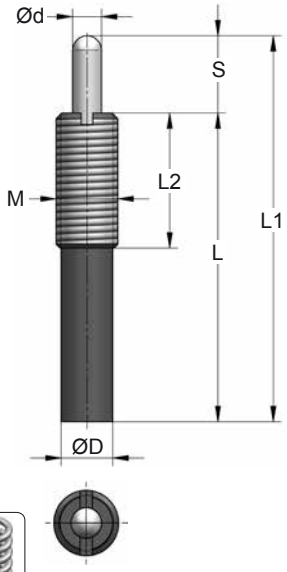




| ORDER | M | S (mm) | L1 (mm) | L (mm) | L2 (mm) | ØD (mm) | Ød (mm) | $F_0$ (N) | $F_1$ (N) | Key |
|---|---|---|---|---|---|---|---|---|---|---|
| MBR 16 020 | M16 | 20 | 100 | 80 | 35 | 13.4 | 7.5 | 35 | 174 | LP 16 |
| MBR 16 030 | M16 | 30 | 150 | 120 | 35 | 13.4 | 7.5 | 20 | 80 | LP 16 |
| MBR 16 040 | M16 | 40 | 190 | 150 | 35 | 13.4 | 7.5 | 55 | 158 | LP 16 |
| MBR 16 050 | M16 | 50 | 250 | 200 | 35 | 13.4 | 7.5 | 35 | 105 | LP 16 |

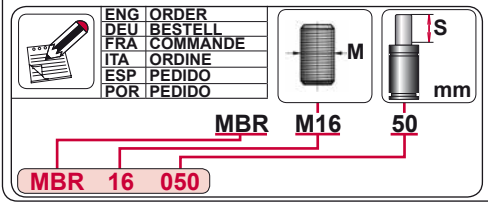


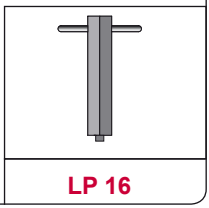

AZOL GAS

# MBN / MBP

*Spring Plungers*

## MBN

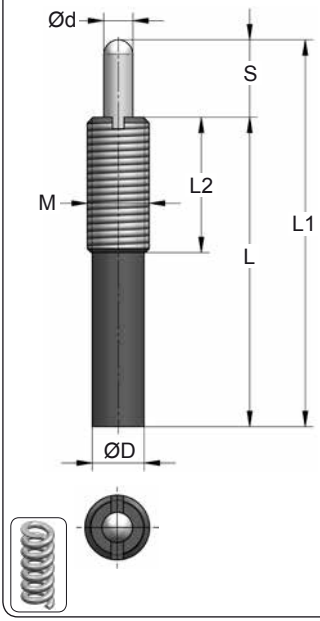


| ORDER | M | S (mm) | L1 (mm) | L (mm) | L2 (mm) | ØD (mm) | Ød (mm) | $F_0$ (N) | $F_1$ (N) | Key |
|---|---|---|---|---|---|---|---|---|---|---|
| MBN 16 010 | M16 | 10 | 90 | 80 | 35 | 13.4 | 7.3 | 17 | 75 | LPS 16 |
| MBN 16 020 | M16 | 20 | 140 | 120 | 35 | 13.4 | 7.3 | 21 | 80 | LPS 16 |
| MBN 16 030 | M16 | 30 | 180 | 150 | 35 | 13.4 | 7.3 | 21 | 90 | LPS 16 |
| MBN 16 040 | M16 | 40 | 240 | 200 | 35 | 13.4 | 7.3 | 16 | 80 | LPS 16 |
| MBN 22 020 | M22 | 20 | 150 | 130 | 50 | 19 | 9 | 80 | 215 | LPS 22 |
| MBN 22 030 | M22 | 30 | 198 | 168 | 50 | 19 | 9 | 70 | 210 | LPS 22 |
| MBN 22 040 | M22 | 40 | 266 | 226 | 50 | 19 | 9 | 75 | 210 | LPS 22 |

| | |
|---|---|
| ENG | ORDER |
| DEU | BESTELL |
| FRA | COMMANDE |
| ITA | ORDINE |
| ESP | PEDIDO |
| POR | PEDIDO |

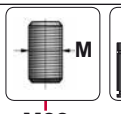


MBN M22 40

MBN 22 040

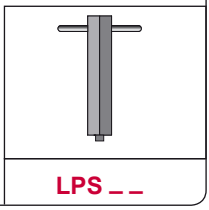

LPS _ _

## MBP

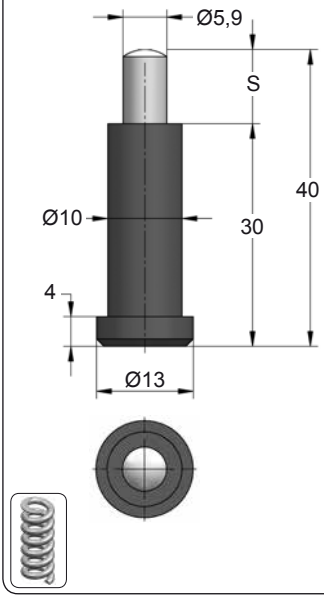


| ORDER | S (mm) | $F_0$ (N) | $F_1$ (N) |
|---|---|---|---|
| MBP 10 | 10 | 42 | 110 |

| | |
|---|---|
| ENG | ORDER |
| DEU | BESTELL |
| FRA | COMMANDE |
| ITA | ORDINE |
| ESP | PEDIDO |
| POR | PEDIDO |

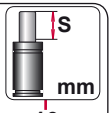


MBP 10

MBP 010

# MBD
*Spring Plungers*

AZOL GAS

## MBD

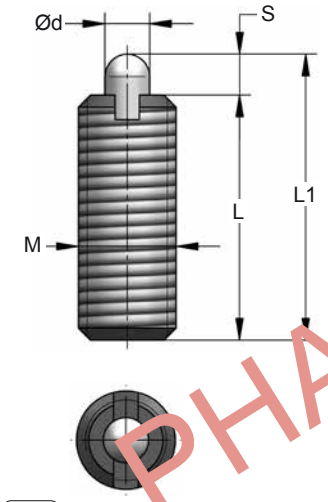


| ORDER | M | S (mm) | L1 (mm) | L (mm) | Ød (mm) | $F_0$ (N) | $F_1$ (N) | Key |
|---|---|---|---|---|---|---|---|---|
| MBD 3 001 | M3 | 1.5 | 11.5 | 10 | 1 | 0.5 | 3 | - |
| MBD 4 002 | M4 | 2 | 14 | 12 | 1.6 | 2 | 10 | - |
| MBD 5 003 | M5 | 3 | 23 | 20 | 2 | 4 | 20 | LP 5 |
| MBD 6 003 | M6 | 3 | 28 | 25 | 2.5 | 3 | 30 | LP 6 |
| MBD 8 003 | M8 | 3 | 35 | 25 | 3.1 | 8 | 30 | LP 8 |
| MBD 10 005 | M10 | 5 | 35 | 30 | 3.8 | 10 | 50 | LP 10 |
| MBD 12 005 | M12 | 5 | 35 | 30 | 5.5 | 10 | 50 | LP 12 |



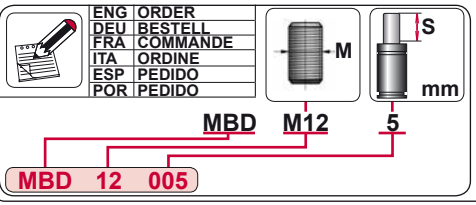


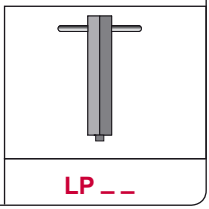


## MBD

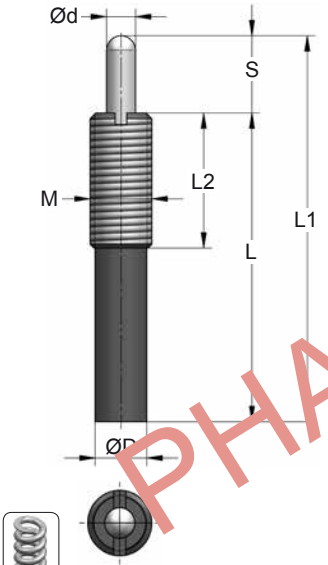


| ORDER | M | S (mm) | L1 (mm) | L (mm) | L2 (mm) | ØD (mm) | Ød (mm) | $F_0$ (N) | $F_1$ (N) | Key |
|---|---|---|---|---|---|---|---|---|---|---|
| MBD 12 010 | M12 | 10 | 53 | 43 | 35 | 10 | 5.5 | 7 | 40 | LP 12 |
| MBD 16 010 | M16 | 10 | 60 | 50 | 35 | 13.4 | 8 | 20 | 100 | LP 16 |
| MBD 16 010/1 | M16 | 10 | 70 | 60 | 35 | 13.4 | 8 | 27 | 80 | LP 16 |
| MBD 16 015 | M16 | 15 | 75 | 60 | 35 | 13.4 | 8 | 15 | 80 | LP 16 |
| MBD 16 020 | M16 | 20 | 105 | 85 | 35 | 13.4 | 8 | 17 | 80 | LP 16 |
| MBD 16 030 | M16 | 30 | 155 | 125 | 35 | 13.4 | 8 | 20 | 80 | LP 16 |
| MBD 16 050 | M16 | 50 | 205 | 155 | 35 | 13.4 | 8 | 30 | 100 | LP 16 |
| MBD 24 015 | M24 | 15 | 75 | 60 | 45 | 21.5 | 10 | 40 | 200 | LP 24 |
| MBD 30 020 | M30 | 20 | 90 | 70 | 45 | 26 | 15 | 50 | 300 | LP 30 |



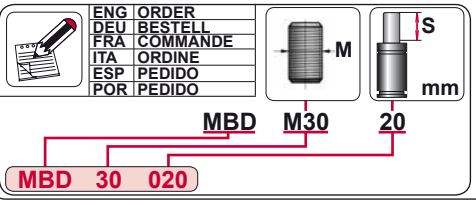


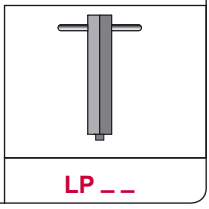


PHASING OUT
PHASING OUT

AZOL GAS

# MBL
Spring Plungers

## MBL

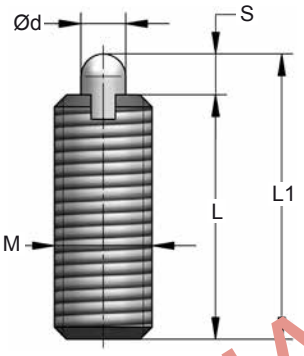


| ORDER | M | S (mm) | L1 (mm) | L (mm) | Ød (mm) | $F_0$ (N) | $F_1$ (N) | Key |
|---|---|---|---|---|---|---|---|---|
| MBL 5 003 | M5 | 3 | 23 | 20 | 2 | 2 | 10 | LP 5 |
| MBL 6 003 | M6 | 3 | 28 | 25 | 2.5 | 3 | 10 | LP 6 |
| MBL 8 003 | M8 | 3 | 28 | 25 | 3.1 | 3 | 10 | LP 8 |
| MBL 10 005 | M10 | 5 | 35 | 30 | 4.8 | 5 | 15 | LP 10 |
| MBL 12 005 | M12 | 5 | 35 | 30 | 5.5 | 2 | 10 | LP 12 |





| | |
|---|---|
| ENG | ORDER |
| DEU | BESTELL |
| FRA | COMMANDE |
| ITA | ORDINE |
| ESP | PEDIDO |
| POR | PEDIDO |

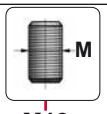


MBL M12 5

MBL 12 005

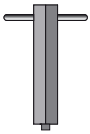

LP _ _

PHASING OUT

## MBL

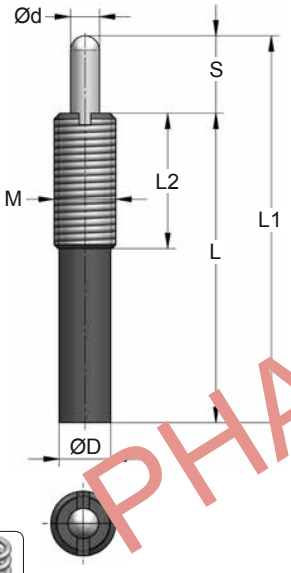


| ORDER | M | S (mm) | L1 (mm) | L (mm) | L2 (mm) | ØD (mm) | Ød (mm) | $F_0$ (N) | $F_1$ (N) | Key |
|---|---|---|---|---|---|---|---|---|---|---|
| MBL 12 010 | M12 | 10 | 53 | 43 | 35 | 10 | 6.5 | 4 | 20 | LP 12 |
| MBL 16 010 | M16 | 10 | 60 | 50 | 35 | 13.4 | 8 | 10 | 50 | LP 16 |
| MBL 16 010/1 | M16 | 10 | 70 | 60 | 35 | 13.4 | 8 | 13 | 40 | LP 16 |
| MBL 16 015 | M16 | 15 | 75 | 60 | 35 | 13.4 | 8 | 10 | 40 | LP 16 |
| MBL 16 020 | M16 | 20 | 80 | 60 | 35 | 13.4 | 8 | 13 | 40 | LP 16 |
| MBL 16 030 | M16 | 30 | 155 | 125 | 35 | 13.4 | 8 | 18 | 40 | LP 16 |
| MBL 16 050 | M16 | 50 | 205 | 155 | 35 | 13.4 | 8 | 20 | 50 | LP 16 |
| MBL 24 015 | M24 | 15 | 75 | 60 | 45 | 21.5 | 10 | 20 | 100 | LP 24 |
| MBL 30 020 | M30 | 20 | 90 | 70 | 45 | 26 | 15 | 30 | 150 | LP 30 |





| | |
|---|---|
| ENG | ORDER |
| DEU | BESTELL |
| FRA | COMMANDE |
| ITA | ORDINE |
| ESP | PEDIDO |
| POR | PEDIDO |

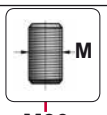


MBL M30 20

MBL 30 020

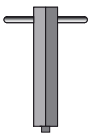

LP _ _

PHASING OUT

# MBSD / MBSL

*Spring Plungers*

AZOL GAS

## MBSD

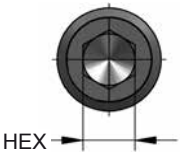


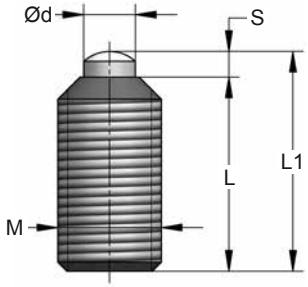




| ORDER | M | S (mm) | L1 (mm) | L (mm) | Ød (mm) | HEX (mm) | $F_0$ (N) | $F_1$ (N) | Allen Key |
|---|---|---|---|---|---|---|---|---|---|
| MBSD 5 001 | M5 | 1.5 | 13.5 | 12 | 2.5 | 2.5 | 5 | 15 | 2.5 |
| MBSD 6 001 | M6 | 1.5 | 14.5 | 13 | 3 | 3 | 6 | 20 | 3 |
| MBSD 8 002 | M8 | 2 | 17 | 15 | 4 | 4 | 6 | 20 | 4 |
| MBSD 10 002 | M10 | 2.5 | 18.5 | 16 | 5 | 5 | 10 | 30 | 5 |
| MBSD 12 003 | M12 | 3.5 | 23.5 | 20 | 6 | 6 | 10 | 30 | 6 |
| MBSD 16 004 | M16 | 4.5 | 26.5 | 22 | 8 | 8 | 20 | 60 | 8 |



| | |
|---|---|
| ENG | ORDER |
| DEU | BESTELL |
| FRA | COMMANDE |
| ITA | ORDINE |
| ESP | PEDIDO |
| POR | PEDIDO |

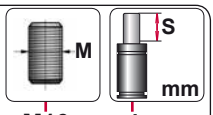


MBSD M16 4

MBSD 16 004

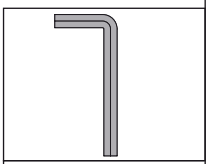

ALLEN _ _

## MBSL

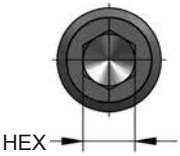


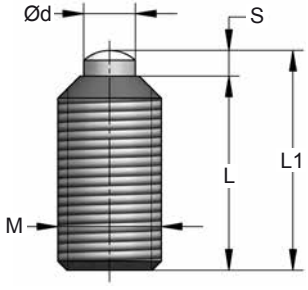




| ORDER | M | S (mm) | L1 (mm) | L (mm) | Ød (mm) | HEX (mm) | $F_0$ (N) | $F_1$ (N) | Allen Key |
|---|---|---|---|---|---|---|---|---|---|
| MBSL 5 001 | M5 | 1.5 | 13.5 | 12 | 2.5 | 2.5 | 2 | 8 | 2.5 |
| MBSL 6 001 | M6 | 1.5 | 14.5 | 13 | 3 | 3 | 3 | 10 | 3 |
| MBSL 8 002 | M8 | 2 | 17 | 15 | 4 | 4 | 3 | 10 | 4 |
| MBSL 10 002 | M10 | 2.5 | 18.5 | 16 | 5 | 5 | 5 | 15 | 5 |
| MBSL 12 003 | M12 | 3.5 | 23.5 | 20 | 6 | 6 | 5 | 15 | 6 |
| MBSL 16 004 | M16 | 4.5 | 26.5 | 22 | 8 | 8 | 10 | 30 | 8 |



| | |
|---|---|
| ENG | ORDER |
| DEU | BESTELL |
| FRA | COMMANDE |
| ITA | ORDINE |
| ESP | PEDIDO |
| POR | PEDIDO |

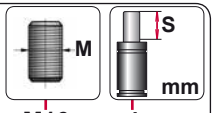


MBSL M16 4

MBSL 16 004

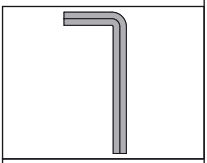

ALLEN _ _

AZOL GAS

# MBT / MBTH

*Spring Plungers*

## MBT

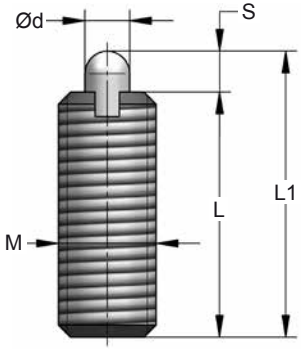






| ORDER | M | S (mm) | L1 (mm) | L (mm) | Ød (mm) | $F_0$ (N) | $F_1$ (N) | Key |
|---|---|---|---|---|---|---|---|---|
| MBT 3 001 | M3 | 1 | 13 | 12 | 1 | 2 | 4 | LPD 3 |
| MBT 4 001 | M4 | 1.5 | 16.5 | 15 | 1.5 | 4.5 | 16 | LPD 4 |
| MBT 5 002 | M5 | 2.3 | 20.3 | 18 | 2.4 | 6 | 19 | LPD 5 |
| MBT 6 002 | M6 | 2.5 | 22.5 | 20 | 2.7 | 6 | 19 | LPD 6 |
| MBT 8 003 | M8 | 3 | 25 | 22 | 3.5 | 10 | 39 | LPD 8 |
| MBT 10 003 | M10 | 3 | 25 | 22 | 4 | 10 | 39 | LPD 10 |
| MBT 12 004 | M12 | 4 | 32 | 28 | 6 | 12 | 53 | LPD 12 |
| MBT 16 005 | M16 | 5 | 37 | 32 | 7.5 | 45 | 100 | LPD 16 |
| MBT 20 007 | M20 | 7 | 47 | 40 | 10 | 52 | 125 | LPD 20 |
| MBT 24 010 | M24 | 10 | 62 | 52 | 12 | 70 | 170 | LPS 24 |

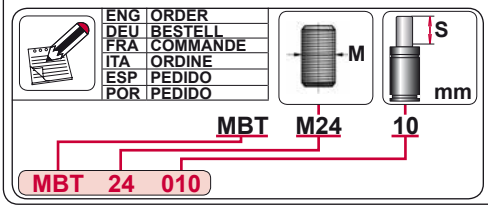


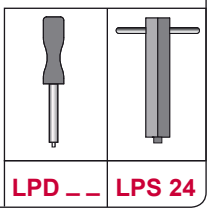


## MBTH

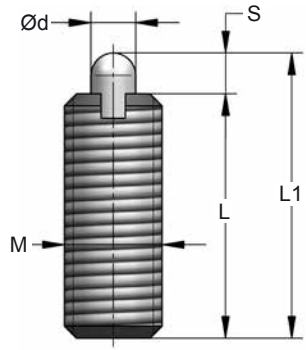






| ORDER | M | S (mm) | L1 (mm) | L (mm) | Ød (mm) | $F_0$ (N) | $F_1$ (N) | Key |
|---|---|---|---|---|---|---|---|---|
| MBTH 5 002 | M5 | 2.3 | 20.3 | 18 | 2.4 | 11 | 40 | LPD 5 |
| MBTH 6 002 | M6 | 2.5 | 22.5 | 20 | 2.7 | 15 | 43 | LPD 6 |
| MBTH 8 003 | M8 | 3 | 25 | 22 | 3.5 | 20 | 75 | LPD 8 |
| MBTH 10 003 | M10 | 3 | 25 | 22 | 4 | 20 | 75 | LPD 10 |
| MBTH 12 004 | M12 | 4 | 32 | 28 | 6 | 45 | 120 | LPD 12 |
| MBTH 16 005 | M16 | 5 | 37 | 32 | 7.5 | 64 | 160 | LPD 16 |
| MBTH 20 007 | M20 | 7 | 47 | 40 | 10 | 75 | 195 | LPD 20 |
| MBTH 24 010 | M24 | 10 | 62 | 52 | 12 | 75 | 245 | LPS 24 |

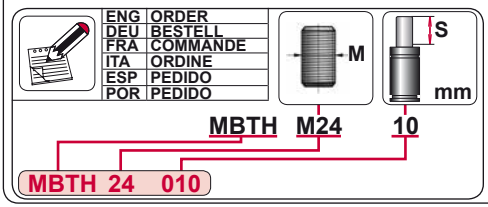


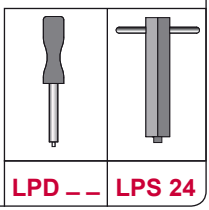

# MBZ / MBX

*Spring Plungers*

AZOL GAS

## MBZ

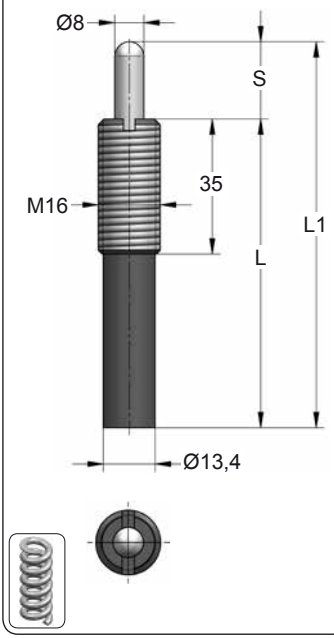


| ORDER | S (mm) | L1 (mm) | L (mm) | $F_0$ (N) | $F_1$ (N) | Key |
|---|---|---|---|---|---|---|
| MBZ 16 020 | 20 | 100 | 80 | 24 | 186 | LP 16 |
| MBZ 16 030 | 30 | 110 | 80 | 4 | 47 | LP 16 |
| MBZ 16 040 | 40 | 190 | 150 | 59 | 177 | LP 16 |
| MBZ 16 050 | 50 | 200 | 150 | 13 | 47 | LP 16 |
| MBZ 16 060 | 60 | 210 | 150 | 11 | 45 | LP 16 |
| MBZ 16 070 | 70 | 270 | 200 | 5 | 40 | LP 16 |
| MBZ 16 080 | 80 | 280 | 200 | 2 | 38 | LP 16 |

| | |
|---|---|
| ENG | ORDER |
| DEU | BESTELL |
| FRA | COMMANDE |
| ITA | ORDINE |
| ESP | PEDIDO |
| POR | PEDIDO |

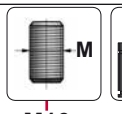


MBZ M16 80

MBZ 16 080

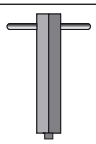

LP 16

## MBX

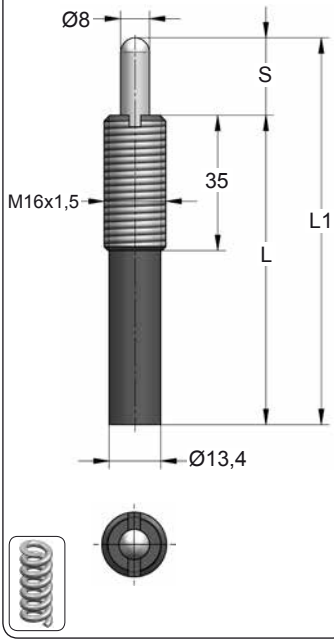


| ORDER | S (mm) | L1 (mm) | L (mm) | $F_0$ (N) | $F_1$ (N) | Key |
|---|---|---|---|---|---|---|
| MBX 16 020 | 20 | 100 | 80 | 24 | 186 | LP 16 |
| MBX 16 030 | 30 | 110 | 80 | 4 | 47 | LP 16 |
| MBX 16 040 | 40 | 190 | 150 | 59 | 177 | LP 16 |
| MBX 16 050 | 50 | 200 | 150 | 13 | 47 | LP 16 |
| MBX 16 060 | 60 | 210 | 150 | 11 | 45 | LP 16 |
| MBX 16 070 | 70 | 270 | 200 | 5 | 40 | LP 16 |
| MBX 16 080 | 80 | 280 | 200 | 2 | 38 | LP 16 |

| | |
|---|---|
| ENG | ORDER |
| DEU | BESTELL |
| FRA | COMMANDE |
| ITA | ORDINE |
| ESP | PEDIDO |
| POR | PEDIDO |

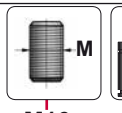


MBX M16 80

MBX 16 080

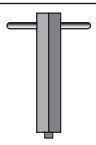

LP 16

AZOL GAS

# MBHR / MBFP

*Spring Plungers*

## MBHR

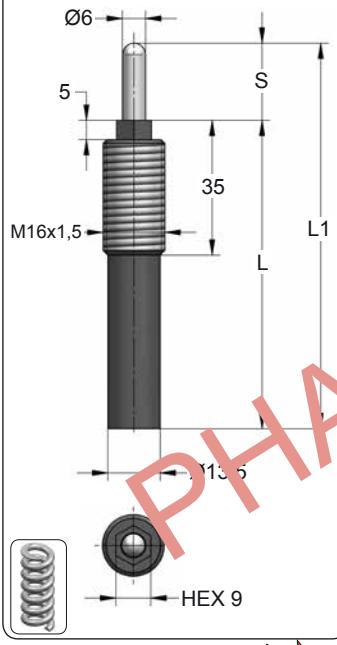


| ORDER | S (mm) | L1 (mm) | L (mm) | $F_0$ (N) | $F_1$ (N) | Key |
|---|---|---|---|---|---|---|
| MBHR 16 020 | 20 | 100 | 80 | 24 | 186 | LPV 8-9 |
| MBHR 16 050 | 50 | 200 | 150 | 13 | 47 | LPV 8-9 |

PHASING OUT

| | |
|---|---|
| ENG | ORDER |
| DEU | BESTELL |
| FRA | COMMANDE |
| ITA | ORDINE |
| ESP | PEDIDO |
| POR | PEDIDO |

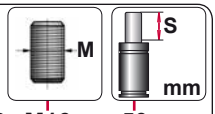


MBHR M16 50

MBHR 16 050

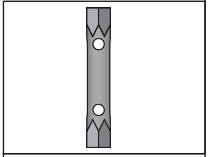

LPV 8-9

## MBFP

New!

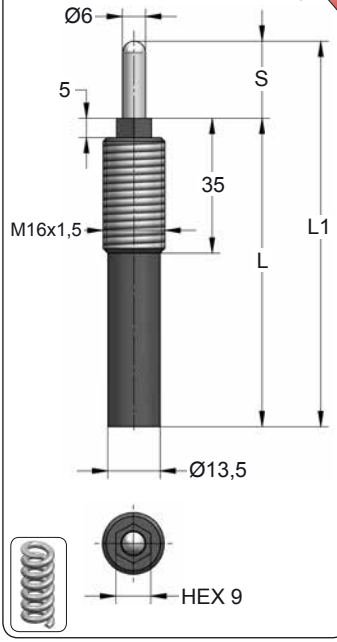


| ORDER | S (mm) | L1 (mm) | L (mm) | $F_0$ (N) | $F_1$ (N) | Key |
|---|---|---|---|---|---|---|
| MBFP 16 020 | 20 | 100 | 80 | 24 | 186 | LPV 8-9 |

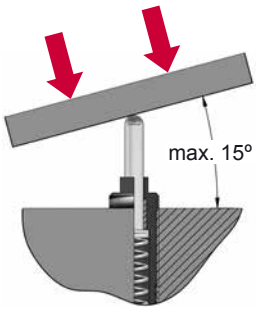


| | |
|---|---|
| ENG | ORDER |
| DEU | BESTELL |
| FRA | COMMANDE |
| ITA | ORDINE |
| ESP | PEDIDO |
| POR | PEDIDO |

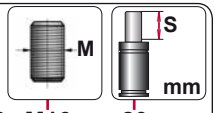


MBFP M16 20

MBFP 16 020

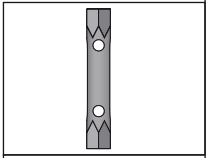

LPV 8-9

# MBHX / MBHY

*Spring Plungers*

AZOL GAS

## MBHX

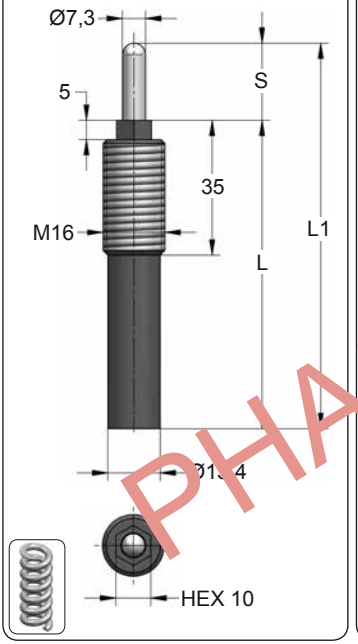


| ORDER | S (mm) | L1 (mm) | L (mm) | $F_0$ (N) | $F_1$ (N) | Key |
|---|---|---|---|---|---|---|
| MBHX 16 010 | 10 | 70 | 60 | 4 | 13.3 | LPV 10-11 |
| MBHX 16 015 | 15 | 75 | 60 | 10 | 40 | LPV 10-11 |
| MBHX 16 020 | 20 | 100 | 80 | 7 | 34.5 | LPV 10-11 |
| MBHX 16 030 | 30 | 110 | 80 | 6.[illegible] | 45.5 | LPV 10-11 |
| MBHX 16 030/1 | 30 | 150 | [illegible]0 | 18 | 40 | LPV 10-11 |
| MBHX 16 040 | 40 | 190 | 150 | [illegible].2 | 37.2 | LPV 10-11 |
| MBHX 16 050 | 50 | 200 | 150 | 13.2 | 43.2 | LPV 10-11 |
| MBHX 16 060 | [illegible]0 | 210 | [illegible]50 | 13.2 | 49.2 | LPV 10-11 |
| MBHX 16 070 | 70 | 270 | 200 | 9.7 | 40.5 | LPV 10-11 |
| MBHX 16 080 | [illegible]0 | 280 | 200 | 9.7 | 44.8 | LPV 10-11 |

| | |
|---|---|
| ENG | ORDER |
| DEU | BESTELL |
| FRA | COMMANDE |
| ITA | ORDINE |
| ESP | PEDIDO |
| POR | PEDIDO |

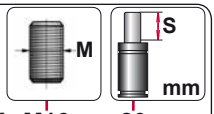


MBHX M16 80

MBHX 16 080

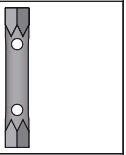

LPV 10-11

## MBHY

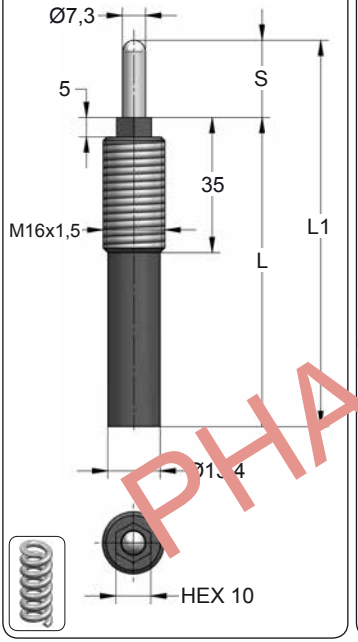


| ORDER | S (mm) | L1 (mm) | L (mm) | $F_0$ (N) | $F_1$ (N) | Key |
|---|---|---|---|---|---|---|
| MBHY 16 010 | 10 | 70 | 60 | 4 | 13.3 | LPV 10-11 |
| MBHY 16 015 | 15 | 75 | 60 | 10 | 40 | LPV 10-11 |
| MBHY 16 020 | 20 | 100 | 80 | 7 | 34.5 | LPV 10-11 |
| MBHY 16 030 | 30 | 110 | 80 | 6.[illegible] | 45.5 | LPV 10-11 |
| MBHY 16 030/1 | 30 | 150 | [illegible]0 | 18 | 40 | LPV 10-11 |
| MBHY 16 040 | 40 | 190 | 150 | [illegible].2 | 37.2 | LPV 10-11 |
| MBHY 16 050 | 50 | 200 | 150 | 13.2 | 43.2 | LPV 10-11 |
| MBHY 16 060 | [illegible]0 | 210 | [illegible]50 | 13.2 | 49.2 | LPV 10-11 |
| MBHY 16 070 | 70 | 270 | 200 | 9.7 | 40.5 | LPV 10-11 |
| MBHY 16 080 | [illegible]0 | 280 | 200 | 9.7 | 44.8 | LPV 10-11 |

| | |
|---|---|
| ENG | ORDER |
| DEU | BESTELL |
| FRA | COMMANDE |
| ITA | ORDINE |
| ESP | PEDIDO |
| POR | PEDIDO |

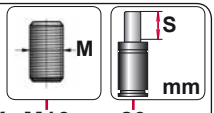


MBHY M16 80

MBHY 16 080

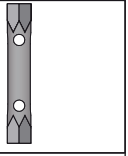

LPV 10-11

PHASING OUT
PHASING OUT

AZOL GAS

# MBHZ / MBHW

*Spring Plungers*

## MBHZ

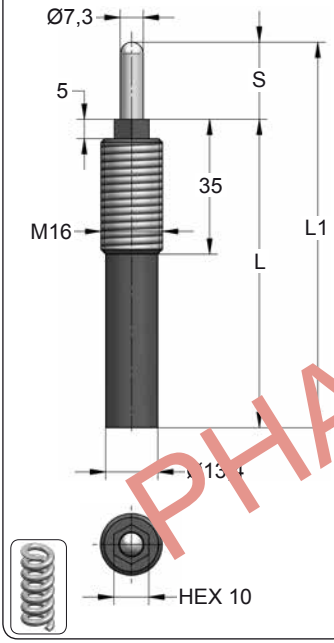


| ORDER | S (mm) | L1 (mm) | L (mm) | $F_0$ (N) | $F_1$ (N) | Key |
|---|---|---|---|---|---|---|
| MBHZ 16 010 | 10 | 70 | 60 | 13 | 45.5 | LPV 10-11 |
| MBHZ 16 015 | 15 | 75 | 60 | 15 | 56 | LPV 10-11 |
| MBHZ 16 020 | 20 | 100 | 80 | 3[illegible]5 | 72.5 | LPV 10-11 |
| MBHZ 16 030 | 30 | 110 | 80 | 20 | [illegible] | LPV 10-11 |
| MBHZ 16 030/1 | 30 | 150 | [illegible] | 56.1 | 132.2 | LPV 10-11 |
| MBHZ 16 030/2 | 30 | 150 | 120 | [illegible] | 80 | LPV 10-11 |
| MBHZ 16 030/3 | 30 | 180 | 150 | 56.1 | 132.2 | LPV 10-11 |
| MBHZ 16 040 | 4[illegible] | 190 | [illegible] | 56.1 | 158.1 | LPV 10-11 |
| MBHZ 16 050 | [illegible]0 | [illegible]00 | 150 | 19.3 | 100 | LPV 10-11 |
| MBHZ 16 050/1 | [illegible]0 | [illegible]50 | 200 | 19.3 | 100 | LPV 10-11 |
| MBHZ 16 0[illegible] | 60 | 210 | 150 | 19.3 | 116 | LPV 10-11 |
| MBHZ 16 060/1 | [illegible]0 | 260 | 200 | 19.3 | 116 | LPV 10-11 |
| MBHZ 16 [illegible]70 | 70 | 270 | 200 | 19.3 | 132 | LPV 10-11 |
| MBHZ 16 080 | 80 | 280 | 200 | 25 | 100 | LPV 10-11 |

| | |
|---|---|
| ENG | ORDER |
| DEU | BESTELL |
| FRA | COMMANDE |
| ITA | ORDINE |
| ESP | PEDIDO |
| POR | PEDIDO |

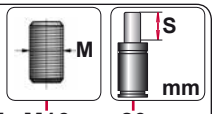


MBHZ M16 80

MBHZ 16 080



LPV 10-11

## MBHW

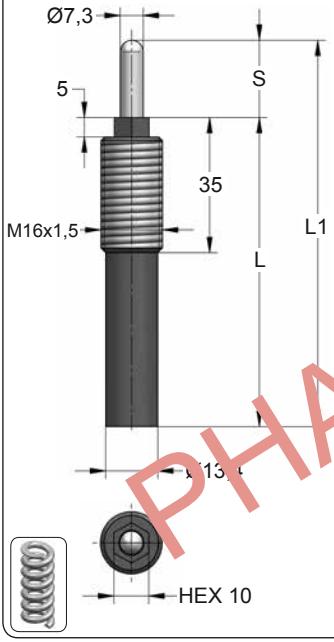


| ORDER | S (mm) | L1 (mm) | L (mm) | $F_0$ (N) | $F_1$ (N) | Key |
|---|---|---|---|---|---|---|
| MBHW 16 010 | 10 | 70 | 60 | 13 | 45.5 | LPV 10-11 |
| MBHW 16 015 | 15 | 75 | 60 | 15 | 56 | LPV 10-11 |
| MBHW 16 020 | 20 | 100 | 80 | 3[illegible]5 | 72.5 | LPV 10-11 |
| MBHW 16 030 | 30 | 110 | 80 | 20 | [illegible] | LPV 10-11 |
| MBHW 16 030/1 | 30 | 150 | [illegible] | 56.1 | 132.2 | LPV 10-11 |
| MBHW 16 030/2 | 30 | 150 | 120 | [illegible] | 80 | LPV 10-11 |
| MBHW 16 030/3 | 30 | 180 | 150 | 56.1 | 132.2 | LPV 10-11 |
| MBHW 16 040 | 4[illegible] | 190 | [illegible] | 56.1 | 158.1 | LPV 10-11 |
| MBHW 16 050 | [illegible]0 | [illegible]00 | 150 | 19.3 | 100 | LPV 10-11 |
| MBHW 16 050/1 | [illegible]0 | [illegible]50 | 200 | 19.3 | 100 | LPV 10-11 |
| MBHW 16 0[illegible] | 60 | 210 | 150 | 19.3 | 116 | LPV 10-11 |
| MBHW 16 060/1 | [illegible]0 | 260 | 200 | 19.3 | 116 | LPV 10-11 |
| MBHW 16 [illegible]70 | 70 | 270 | 200 | 19.3 | 132 | LPV 10-11 |
| MBHW 16 080 | 80 | 280 | 200 | 25 | 100 | LPV 10-11 |

| | |
|---|---|
| ENG | ORDER |
| DEU | BESTELL |
| FRA | COMMANDE |
| ITA | ORDINE |
| ESP | PEDIDO |
| POR | PEDIDO |

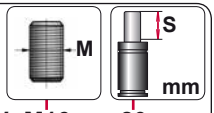


MBHW M16 80

MBHW 16 080



LPV 10-11

PHASING OUT
PHASING OUT

# MBHC / MBHF

*Spring Plungers*

AZOL GAS

## MBHC

New!

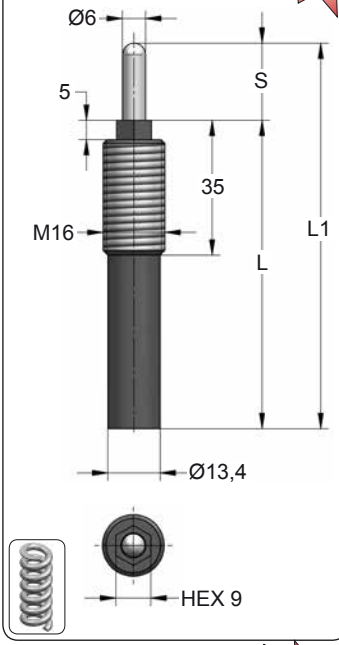


| ORDER | S (mm) | L1 (mm) | L (mm) | $F_0$ (N) | $F_1$ (N) | Key |
|---|---|---|---|---|---|---|
| MBHC 16 010 | 10 | 70 | 60 | 4 | 13.3 | LPV 8-9 |
| MBHC 16 015 | 15 | 75 | 60 | 10 | 40 | LPV 8-9 |
| MBHC 16 020 | 20 | 100 | 80 | 7 | 34.5 | LPV 8-9 |
| MBHC 16 030 | 30 | 110 | 80 | 6.5 | 45.5 | LPV 8-9 |
| MBHC 16 030/1 | 30 | 150 | 120 | 18 | 40 | LPV 8-9 |
| MBHC 16 040 | 40 | 190 | 150 | 13.2 | 37.2 | LPV 8-9 |
| MBHC 16 050 | 50 | 200 | 150 | 13.2 | 43.2 | LPV 8-9 |
| MBHC 16 060 | 60 | 210 | 150 | 13.2 | 49.2 | LPV 8-9 |
| MBHC 16 070 | 70 | 270 | 200 | 9.7 | 40.5 | LPV 8-9 |
| MBHC 16 080 | 80 | 280 | 200 | 9.7 | 44.8 | LPV 8-9 |

| | |
|---|---|
| ENG | ORDER |
| DEU | BESTELL |
| FRA | COMMANDE |
| ITA | ORDINE |
| ESP | PEDIDO |
| POR | PEDIDO |

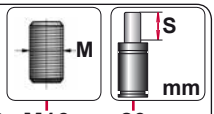


MBHC M16 80

MBHC 16 080

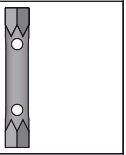

LPV 8-9

## MBHF

New!

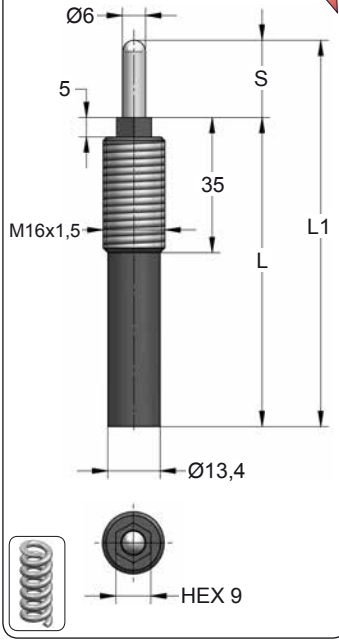


| ORDER | S (mm) | L1 (mm) | L (mm) | $F_0$ (N) | $F_1$ (N) | Key |
|---|---|---|---|---|---|---|
| MBHF 16 010 | 10 | 70 | 60 | 4 | 13.3 | LPV 8-9 |
| MBHF 16 015 | 15 | 75 | 60 | 10 | 40 | LPV 8-9 |
| MBHF 16 020 | 20 | 100 | 80 | 7 | 34.5 | LPV 8-9 |
| MBHF 16 030 | 30 | 110 | 80 | 6.5 | 45.5 | LPV 8-9 |
| MBHF 16 030/1 | 30 | 150 | 120 | 18 | 40 | LPV 8-9 |
| MBHF 16 040 | 40 | 190 | 150 | 13.2 | 37.2 | LPV 8-9 |
| MBHF 16 050 | 50 | 200 | 150 | 13.2 | 43.2 | LPV 8-9 |
| MBHF 16 060 | 60 | 210 | 150 | 13.2 | 49.2 | LPV 8-9 |
| MBHF 16 070 | 70 | 270 | 200 | 9.7 | 40.5 | LPV 8-9 |
| MBHF 16 080 | 80 | 280 | 200 | 9.7 | 44.8 | LPV 8-9 |

| | |
|---|---|
| ENG | ORDER |
| DEU | BESTELL |
| FRA | COMMANDE |
| ITA | ORDINE |
| ESP | PEDIDO |
| POR | PEDIDO |

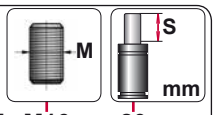


MBHF M16 80

MBHF 16 080

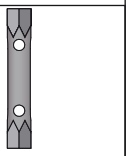

LPV 8-9

AZOL GAS

# MBHG / MBHS

*Spring Plungers*

## MBHG

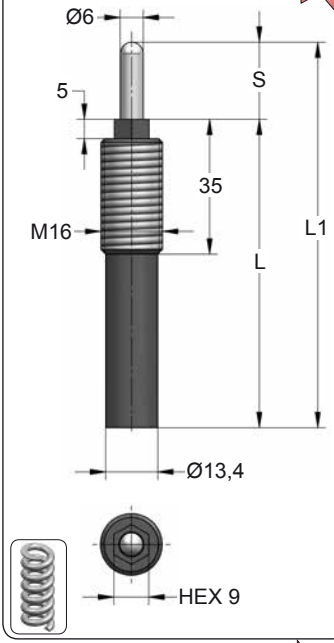


| ORDER | S (mm) | L1 (mm) | L (mm) | $F_0$ (N) | $F_1$ (N) | Key |
|---|---|---|---|---|---|---|
| MBHG 16 010 | 10 | 70 | 60 | 13 | 45.5 | LPV 8-9 |
| MBHG 16 015 | 15 | 75 | 60 | 15 | 56 | LPV 8-9 |
| MBHG 16 020 | 20 | 100 | 80 | 34.5 | 172.5 | LPV 8-9 |
| MBHG 16 030 | 30 | 150 | 120 | 20 | 80 | LPV 8-9 |
| MBHG 16 030/1 | 30 | 180 | 150 | 56.1 | 132.2 | LPV 8-9 |
| MBHG 16 040 | 40 | 190 | 150 | 56.1 | 158.1 | LPV 8-9 |
| MBHG 16 050 | 50 | 250 | 200 | 19.3 | 100 | LPV 8-9 |
| MBHG 16 060 | 60 | 260 | 200 | 19.3 | 116 | LPV 8-9 |
| MBHG 16 070 | 70 | 270 | 200 | 19.3 | 132 | LPV 8-9 |
| MBHG 16 080 | 80 | 280 | 200 | 25 | 100 | LPV 8-9 |

| | |
|---|---|
| ENG | ORDER |
| DEU | BESTELL |
| FRA | COMMANDE |
| ITA | ORDINE |
| ESP | PEDIDO |
| POR | PEDIDO |

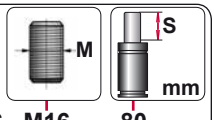


MBHG M16 80

MBHG 16 080

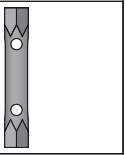

LPV 8-9

## MBHS

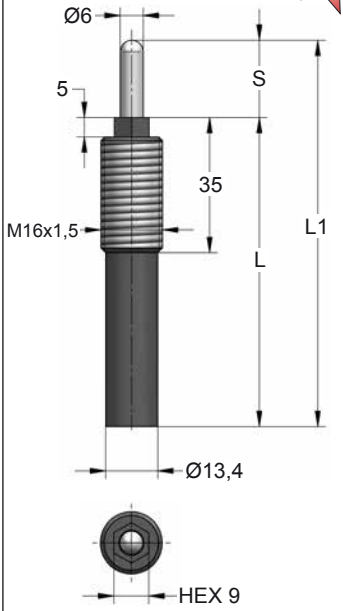


| ORDER | S (mm) | L1 (mm) | L (mm) | $F_0$ (N) | $F_1$ (N) | Key |
|---|---|---|---|---|---|---|
| MBHS 16 010 | 10 | 70 | 60 | 13 | 45.5 | LPV 8-9 |
| MBHS 16 015 | 15 | 75 | 60 | 15 | 56 | LPV 8-9 |
| MBHS 16 020 | 20 | 100 | 80 | 34.5 | 172.5 | LPV 8-9 |
| MBHS 16 030 | 30 | 150 | 120 | 20 | 80 | LPV 8-9 |
| MBHS 16 030/1 | 30 | 180 | 150 | 56.1 | 132.2 | LPV 8-9 |
| MBHS 16 040 | 40 | 190 | 150 | 56.1 | 158.1 | LPV 8-9 |
| MBHS 16 050 | 50 | 250 | 200 | 19.3 | 100 | LPV 8-9 |
| MBHS 16 060 | 60 | 260 | 200 | 19.3 | 116 | LPV 8-9 |
| MBHS 16 070 | 70 | 270 | 200 | 19.3 | 132 | LPV 8-9 |
| MBHS 16 080 | 80 | 280 | 200 | 25 | 100 | LPV 8-9 |

| | |
|---|---|
| ENG | ORDER |
| DEU | BESTELL |
| FRA | COMMANDE |
| ITA | ORDINE |
| ESP | PEDIDO |
| POR | PEDIDO |

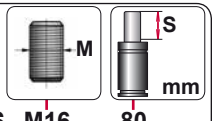


MBHS M16 80

MBHS 16 080

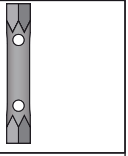

LPV 8-9

# MBJS / MBJX

*Spring Plungers*

AZOL GAS

## MBJS

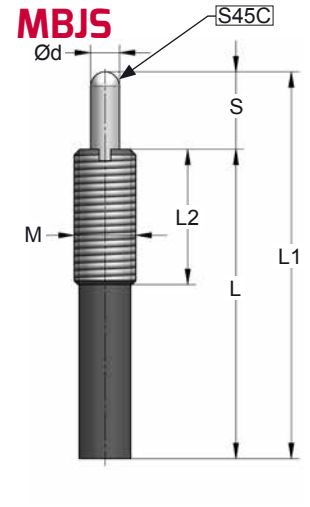


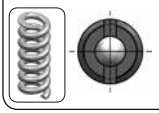

| ORDER | M | S (mm) | L1 (mm) | L (mm) | L2 (mm) | Ød (mm) | $F_0$ (N) | $F_1$ (N) | Key |
|---|---|---|---|---|---|---|---|---|---|
| MBJS 3 001 | M3 | 1.5 | 11.5 | 10 | 10 | 1.1 | 0.05 | 0.32 | --- |
| MBJS 3 003 | M3 | 3 | 18 | 15 | 15 | 1.1 | 0.09 | 0.32 | --- |
| MBJS 4 002 | M4 | 2 | 17 | 15 | 15 | 1.6 | 0.23 | 0.65 | --- |
| MBJS 4 004 | M4 | 4 | 28 | 24 | 24 | 1.6 | 0.24 | 0.65 | --- |
| MBJS 5 003 | M5 | 3 | 23 | 20 | 20 | 2 | 0.74 | 2.95 | LPJ 1 |
| MBJS 5 005 | M5 | 5 | 32 | 27 | 27 | 2 | 0.72 | 2.95 | LPJ 1 |
| MBJS 6 003 | M6 | 3 | 28 | 25 | 25 | 2.5 | 0.85 | 3.2 | LPJ 1 |
| MBJS 6 005 | M6 | 5 | 35 | 30 | 30 | 2.5 | 0.85 | 3.2 | LPJ 1 |
| MBJS 8 003 | M8 | 3 | 28 | 25 | 25 | 3.1 | 0.9 | 3.3 | LPJ 2 |
| MBJS 8 005 | M8 | 5 | 32 | 27 | 27 | 3.1 | 0.9 | 3.3 | LPJ 2 |
| MBJS 10 005 | M10 | 5 | 35 | 30 | 30 | 3.8 | 1.9 | 4.7 | LPJ 2 |
| MBJS 10 010 | M10 | 10 | 53 | 43 | 30 | 3.8 | 1.7 | 4.7 | LPJ 2 |
| MBJS 12 005 | M12 | 5 | 35 | 30 | 30 | 5.5 | 1.5 | 4.7 | LPJ 3 |
| MBJS 12 010 | M12 | 10 | 53 | 43 | 35 | 5.5 | 1.3 | 5.9 | LPJ 3 |
| MBJS 12 015 | M12 | 15 | 66 | 51 | 35 | 5.5 | 1.6 | 5.9 | LPJ 3 |
| MBJS 16 010 | M16 | 10 | 70 | 60 | 35 | 8 | 1.7 | 12.8 | LPJ 4 |
| MBJS 16 015 | M16 | 15 | 75 | 60 | 35 | 8 | 1.7 | 12.8 | LPJ 4 |
| MBJS 16 020 | M16 | 20 | 105 | 85 | 35 | 8 | 1.7 | 12.8 | LPJ 4 |

## MBJX

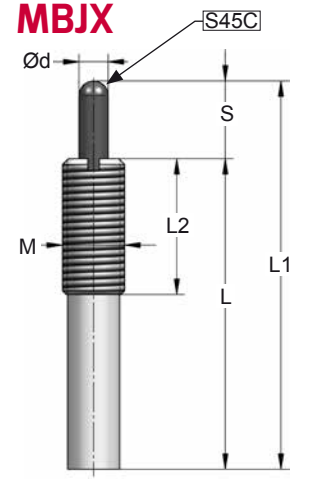






| ORDER | M | S (mm) | L1 (mm) | L (mm) | L2 (mm) | Ød (mm) | $F_0$ (N) | $F_1$ (N) | Key |
|---|---|---|---|---|---|---|---|---|---|
| MBJX 3 001 | M3 | 1.5 | 16.5 | 15 | 15 | 1.1 | 2 | 5 | --- |
| MBJX 3 003 | M3 | 3 | 23 | 20 | 20 | 1.1 | 2 | 5 | --- |
| MBJX 4 002 | M4 | 2 | 26 | 24 | 24 | 1.6 | 5 | 13 | --- |
| MBJX 4 004 | M4 | 4 | 28 | 24 | 24 | 1.6 | 5 | 13 | --- |
| MBJX 5 003 | M5 | 3 | 30 | 27 | 27 | 2 | 9 | 25 | LPJ 1 |
| MBJX 5 005 | M5 | 5 | 44 | 39 | 39 | 2 | 9 | 25 | LPJ 1 |
| MBJX 6 003 | M6 | 3 | 33 | 30 | 30 | 2.5 | 14 | 39 | LPJ 1 |
| MBJX 6 005 | M6 | 5 | 41 | 36 | 36 | 2.5 | 14 | 39 | LPJ 1 |
| MBJX 8 003 | M8 | 3 | 30 | 27 | 27 | 3.1 | 15 | 41 | LPJ 2 |
| MBJX 8 005 | M8 | 5 | 40 | 35 | 30 | 3.1 | 15 | 41 | LPJ 2 |
| MBJX 10 005 | M10 | 5 | 40 | 35 | 30 | 3.8 | 16 | 63 | LPJ 2 |
| MBJX 10 010 | M10 | 10 | 63 | 53 | 30 | 3.8 | 13 | 63 | LPJ 2 |
| MBJX 12 005 | M12 | 5 | 48 | 43 | 35 | 5.5 | 37 | 98 | LPJ 3 |
| MBJX 12 010 | M12 | 10 | 68 | 58 | 35 | 5.5 | 15 | 98 | LPJ 3 |
| MBJX 12 015 | M12 | 15 | 93 | 78 | 35 | 5.5 | 15 | 98 | LPJ 3 |
| MBJX 16 010 | M16 | 10 | 70 | 60 | 35 | 8 | 24 | 147 | LPJ 4 |
| MBJX 16 015 | M16 | 15 | 85 | 70 | 35 | 8 | 22 | 147 | LPJ 4 |
| MBJX 16 020 | M16 | 20 | 110 | 90 | 35 | 8 | 13 | 147 | LPJ 4 |
| MBJX 16 030 | M16 | 30 | 155 | 125 | 35 | 8 | 20 | 147 | LPJ 4 |
| MBJX 20 015 | M20 | 15 | 95 | 80 | 45 | 10 | 13 | 250 | LPJ 5 |
| MBJX 24 015 | M24 | 15 | 99 | 84 | 45 | 10 | 25 | 314 | LPJ 5 |



| | |
|---|---|
| ENG | ORDER |
| DEU | BESTELL |
| FRA | COMMANDE |
| ITA | ORDINE |
| ESP | PEDIDO |
| POR | PEDIDO |

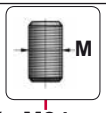


MBJX M24 15

MBJX 24 015

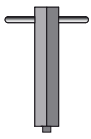

LPJ _ _

AZOL GAS

# MBJL
Spring Plungers

## MBJL

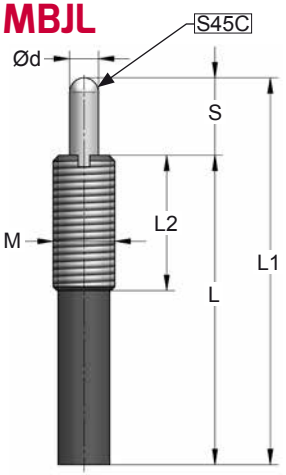




| ORDER | M | S (mm) | L1 (mm) | L (mm) | L2 (mm) | Ød (mm) | $F_0$ (N) | $F_1$ (N) | Key |
|---|---|---|---|---|---|---|---|---|---|
| MBJL 3 001 | M3 | 1.5 | 11.5 | 10 | 10 | 1.1 | 0.5 | 1 | --- |
| MBJL 3 003 | M3 | 3 | 18 | 15 | 15 | 1.1 | 0.3 | 1 | --- |
| MBJL 4 002 | M4 | 2 | 17 | 15 | 15 | 1.6 | 1 | 2 | --- |
| MBJL 4 004 | M4 | 4 | 28 | 24 | 24 | 1.6 | 0.6 | 2 | --- |
| MBJL 5 003 | M5 | 3 | 23 | 20 | 20 | 2 | 2 | 10 | LPJ 1 |
| MBJL 5 005 | M5 | 5 | 32 | 27 | 27 | 2 | 2 | 10 | LPJ 1 |
| MBJL 6 003 | M6 | 3 | 28 | 25 | 25 | 2.5 | 6 | 10 | LPJ 1 |
| MBJL 6 005 | M6 | 5 | 35 | 30 | 30 | 2.5 | 2 | 10 | LPJ 1 |
| MBJL 6 010 | M6 | 10 | 49 | 39 | 30 | 2.5 | 1.4 | 10 | LPJ 1 |
| MBJL 8 003 | M8 | 3 | 28 | 25 | 25 | 3.1 | 6 | 10 | LPJ 2 |
| MBJL 8 005 | M8 | 5 | 32 | 27 | 27 | 3.1 | 3 | 10 | LPJ 2 |
| MBJL 8 010 | M8 | 10 | 53 | 43 | 30 | 3.1 | 3 | 10 | LPJ 2 |
| MBJL 10 005 | M10 | 5 | 35 | 30 | 30 | 3.8 | 6 | 15 | LPJ 2 |
| MBJL 10 010 | M10 | 10 | 53 | 43 | 30 | 3.8 | 3 | 15 | LPJ 2 |
| MBJL 10 015 | M10 | 15 | 73 | 58 | 30 | 3.8 | 3 | 15 | LPJ 2 |
| MBJL 12 005 | M12 | 5 | 35 | 30 | 30 | 5.5 | 6 | 15 | LPJ 3 |
| MBJL 12 010 | M12 | 10 | 53 | 43 | 35 | 5.5 | 3 | 20 | LPJ 3 |
| MBJL 12 015 | M12 | 15 | 66 | 51 | 35 | 5.5 | 3 | 20 | LPJ 3 |
| MBJL 12 020 | M12 | 20 | 98 | 78 | 35 | 5.5 | 3.5 | 20 | LPJ 3 |
| MBJL 16 010 | M16 | 10 | 70 | 60 | 35 | 8 | 6 | 40 | LPJ 4 |
| MBJL 16 015 | M16 | 15 | 75 | 60 | 35 | 8 | 4 | 40 | LPJ 4 |
| MBJL 16 020 | M16 | 20 | 105 | 85 | 35 | 8 | 5 | 40 | LPJ 4 |
| MBJL 16 030 | M16 | 30 | 155 | 125 | 35 | 8 | 3 | 40 | LPJ 4 |
| MBJL 16 040 | M16 | 40 | 165 | 125 | 35 | 8 | 5 | 40 | LPJ 4 |
| MBJL 16 050 | M16 | 50 | 205 | 155 | 35 | 8 | 20 | 50 | LPJ 4 |
| MBJL 16 060 | M16 | 60 | 219 | 159 | 35 | 8 | 3 | 50 | LPJ 4 |
| MBJL 16 070 | M16 | 70 | 255 | 185 | 35 | 8 | 3.5 | 50 | LPJ 4 |
| MBJL 16 080 | M16 | 80 | 265 | 185 | 35 | 8 | 20 | 50 | LPJ 4 |
| MBJL 20 015 | M20 | 15 | 75 | 60 | 45 | 10 | 13 | 80 | LPJ 5 |
| MBJL 20 020 | M20 | 20 | 92 | 72 | 45 | 10 | 12 | 80 | LPJ 5 |
| MBJL 20 030 | M20 | 30 | 126 | 96 | 45 | 10 | 12 | 80 | LPJ 5 |
| MBJL 20 040 | M20 | 40 | 160 | 120 | 45 | 10 | 12 | 80 | LPJ 5 |
| MBJL 24 007 | M24 | 7 | 67 | 60 | 45 | 10 | 20 | 98 | LPJ 5 |
| MBJL 24 015 | M24 | 15 | 75 | 60 | 45 | 10 | 20 | 98 | LPJ 5 |
| MBJL 24 020 | M24 | 20 | 95 | 75 | 45 | 10 | 18 | 98 | LPJ 5 |
| MBJL 24 030 | M24 | 30 | 130 | 100 | 45 | 10 | 18 | 98 | LPJ 5 |
| MBJL 24 040 | M24 | 40 | 164 | 124 | 45 | 10 | 18 | 98 | LPJ 5 |
| MBJL 30 015 | M30 | 15 | 81 | 66 | 45 | 14 | 28 | 118 | LPJ 6 |
| MBJL 30 020 | M30 | 20 | 98 | 78 | 45 | 14 | 28 | 118 | LPJ 6 |
| MBJL 30 030 | M30 | 30 | 130 | 100 | 45 | 14 | 28 | 118 | LPJ 6 |
| MBJL 30 040 | M30 | 40 | 163 | 123 | 45 | 14 | 28 | 118 | LPJ 6 |



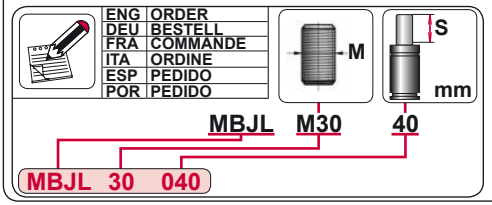


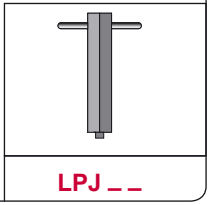

# MBJH

*Spring Plungers*

AZOL GAS

## MBJH

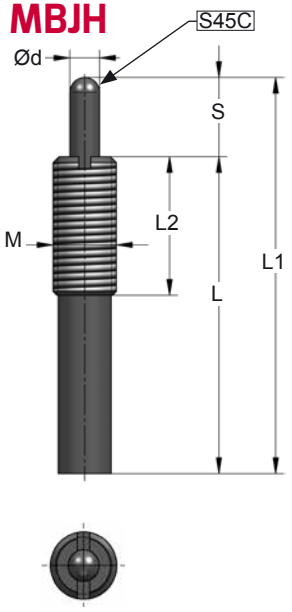


| ORDER | M | S (mm) | L1 (mm) | L (mm) | L2 (mm) | Ød (mm) | $F_0$ (N) | $F_1$ (N) | Key |
|---|---|---|---|---|---|---|---|---|---|
| MBJH 3 001 | M3 | 1.5 | 11.5 | 10 | 10 | 1.1 | 0.8 | 3 | --- |
| MBJH 3 003 | M3 | 3 | 18 | 15 | 15 | 1.1 | 0.8 | 3 | --- |
| MBJH 4 002 | M4 | 2 | 17 | 15 | 15 | 1.6 | 3 | 9 | --- |
| MBJH 4 004 | M4 | 4 | 28 | 24 | 24 | 1.6 | 2 | 9 | --- |
| MBJH 5 003 | M5 | 3 | 23 | 20 | 20 | 2 | 5 | 20 | LPJ 1 |
| MBJH 5 005 | M5 | 5 | 32 | 27 | 27 | 2 | 3 | 20 | LPJ 1 |
| MBJH 6 003 | M6 | 3 | 28 | 25 | 25 | 2.5 | 8 | 30 | LPJ 1 |
| MBJH 6 005 | M6 | 5 | 35 | 30 | 30 | 2.5 | 5 | 30 | LPJ 1 |
| MBJH 6 010 | M6 | 10 | 49 | 39 | 30 | 2.5 | 5 | 28 | LPJ 1 |
| MBJH 8 003 | M8 | 3 | 28 | 25 | 25 | 3.1 | 15 | 30 | LPJ 2 |
| MBJH 8 005 | M8 | 5 | 32 | 27 | 27 | 3.1 | 8 | 30 | LPJ 2 |
| MBJH 8 010 | M8 | 10 | 53 | 43 | 30 | 3.1 | 7 | 30 | LPJ 2 |
| MBJH 10 005 | M10 | 5 | 35 | 30 | 30 | 3.8 | 9 | 50 | LPJ 2 |
| MBJH 10 010 | M10 | 10 | 53 | 43 | 30 | 3.8 | 8 | 50 | LPJ 2 |
| MBJH 10 015 | M10 | 15 | 73 | 58 | 30 | 3.8 | 6 | 50 | LPJ 2 |
| MBJH 12 005 | M12 | 5 | 35 | 30 | 30 | 5.5 | 19 | 50 | LPJ 3 |
| MBJH 12 010 | M12 | 10 | 53 | 43 | 35 | 5.5 | 8 | 50 | LPJ 3 |
| MBJH 12 015 | M12 | 15 | 66 | 51 | 35 | 5.5 | 5 | 50 | LPJ 3 |
| MBJH 12 020 | M12 | 20 | 98 | 78 | 35 | 5.5 | 7 | 50 | LPJ 3 |
| MBJH 16 010 | M16 | 10 | 70 | 60 | 35 | 8 | 13 | 80 | LPJ 4 |
| MBJH 16 015 | M16 | 15 | 75 | 60 | 35 | 8 | 13 | 80 | LPJ 4 |
| MBJH 16 020 | M16 | 20 | 105 | 85 | 35 | 8 | 10 | 80 | LPJ 4 |
| MBJH 16 030 | M16 | 30 | 155 | 125 | 35 | 8 | 7 | 80 | LPJ 4 |
| MBJH 16 040 | M16 | 40 | 165 | 125 | 35 | 8 | 7 | 80 | LPJ 4 |
| MBJH 16 050 | M16 | 50 | 205 | 155 | 35 | 8 | 30 | 80 | LPJ 4 |
| MBJH 16 060 | M16 | 60 | 219 | 159 | 35 | 8 | 4 | 80 | LPJ 4 |
| MBJH 16 070 | M16 | 70 | 255 | 185 | 35 | 8 | 5,6 | 80 | LPJ 4 |
| MBJH 16 080 | M16 | 80 | 265 | 185 | 35 | 8 | 30 | 95 | LPJ 4 |
| MBJH 20 015 | M20 | 15 | 75 | 60 | 45 | 10 | 25 | 150 | LPJ 5 |
| MBJH 20 020 | M20 | 20 | 92 | 72 | 45 | 10 | 23 | 150 | LPJ 5 |
| MBJH 20 030 | M20 | 30 | 126 | 96 | 45 | 10 | 23 | 150 | LPJ 5 |
| MBJH 20 040 | M20 | 40 | 160 | 120 | 45 | 10 | 23 | 150 | LPJ 5 |
| MBJH 24 007 | M24 | 7 | 67 | 60 | 45 | 10 | 44 | 196 | LPJ 5 |
| MBJH 24 015 | M24 | 15 | 75 | 60 | 45 | 10 | 47 | 216 | LPJ 5 |
| MBJH 24 020 | M24 | 20 | 95 | 75 | 45 | 10 | 44 | 216 | LPJ 5 |
| MBJH 24 030 | M24 | 30 | 130 | 100 | 45 | 10 | 44 | 216 | LPJ 5 |
| MBJH 24 040 | M24 | 40 | 164 | 124 | 45 | 10 | 44 | 216 | LPJ 5 |
| MBJH 30 015 | M30 | 15 | 81 | 66 | 45 | 14 | 44 | 275 | LPJ 6 |
| MBJH 30 020 | M30 | 20 | 98 | 78 | 45 | 14 | 53 | 275 | LPJ 6 |
| MBJH 30 030 | M30 | 30 | 130 | 100 | 45 | 14 | 45 | 275 | LPJ 6 |
| MBJH 30 040 | M30 | 40 | 163 | 123 | 45 | 14 | 47 | 275 | LPJ 6 |

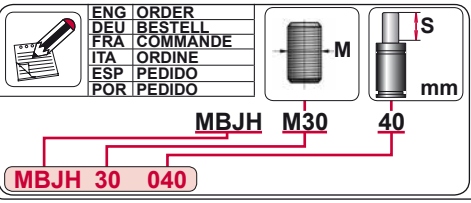


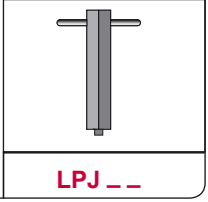

AZOL GAS

# MPSJ / MPLJ

*Spring Plungers*

## MPSJ

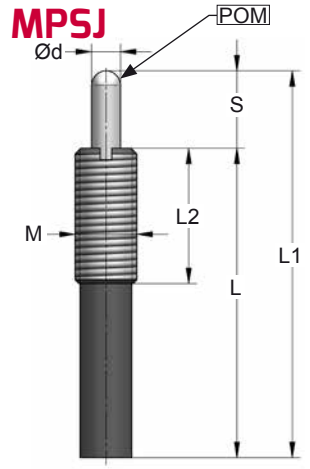


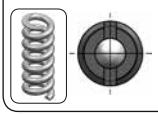

| ORDER | M | S (mm) | L1 (mm) | L (mm) | L2 (mm) | Ød (mm) | $F_0$ (N) | $F_1$ (N) | Key |
|---|---|---|---|---|---|---|---|---|---|
| MPSJ 3 001 | M3 | 1.5 | 11.5 | 10 | 10 | 1.1 | 0.05 | 0.32 | --- |
| MPSJ 3 003 | M3 | 3 | 18 | 15 | 15 | 1.1 | 0.09 | 0.32 | --- |
| MPSJ 4 002 | M4 | 2 | 17 | 15 | 15 | 1.6 | 0.23 | 0.65 | --- |
| MPSJ 4 004 | M4 | 4 | 28 | 24 | 24 | 1.6 | 0.24 | 0.65 | --- |
| MPSJ 5 003 | M5 | 3 | 23 | 20 | 20 | 2 | 0.74 | 2.95 | LPJ 1 |
| MPSJ 5 005 | M5 | 5 | 32 | 27 | 27 | 2 | 0.72 | 2.95 | LPJ 1 |
| MPSJ 6 003 | M6 | 3 | 28 | 25 | 25 | 2.5 | 0.85 | 3.2 | LPJ 1 |
| MPSJ 6 005 | M6 | 5 | 35 | 30 | 30 | 2.5 | 0.85 | 3.2 | LPJ 1 |
| MPSJ 8 003 | M8 | 3 | 28 | 25 | 25 | 3.1 | 0.9 | 3.3 | LPJ 2 |
| MPSJ 8 005 | M8 | 5 | 32 | 27 | 27 | 3.1 | 0.9 | 3.3 | LPJ 2 |
| MPSJ 10 005 | M10 | 5 | 35 | 30 | 30 | 3.8 | 1.9 | 4.7 | LPJ 2 |
| MPSJ 10 010 | M10 | 10 | 53 | 43 | 30 | 3.8 | 1.7 | 4.7 | LPJ 2 |
| MPSJ 12 005 | M12 | 5 | 35 | 30 | 30 | 5.5 | 1.5 | 4.7 | LPJ 3 |
| MPSJ 12 010 | M12 | 10 | 53 | 43 | 35 | 5.5 | 1.3 | 5.9 | LPJ 3 |
| MPSJ 12 015 | M12 | 15 | 66 | 51 | 35 | 5.5 | 1.6 | 5.9 | LPJ 3 |
| MPSJ 16 010 | M16 | 10 | 70 | 60 | 35 | 8 | 1.7 | 12.8 | LPJ 4 |
| MPSJ 16 015 | M16 | 15 | 75 | 60 | 35 | 8 | 1.7 | 12.8 | LPJ 4 |
| MPSJ 16 020 | M16 | 20 | 105 | 85 | 35 | 8 | 1.7 | 12.8 | LPJ 4 |

## MPLJ

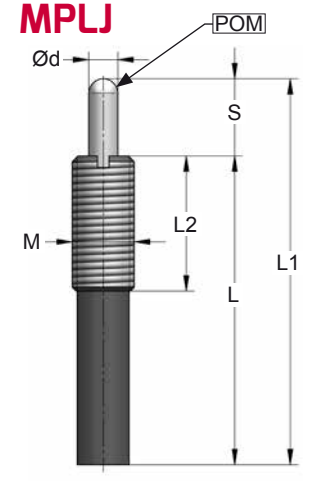


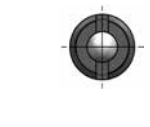

| ORDER | M | S (mm) | L1 (mm) | L (mm) | L2 (mm) | Ød (mm) | $F_0$ (N) | $F_1$ (N) | Key |
|---|---|---|---|---|---|---|---|---|---|
| MPLJ 3 001 | M3 | 1.5 | 11.5 | 10 | 10 | 1.1 | 0.5 | 1 | --- |
| MPLJ 3 003 | M3 | 3 | 18 | 15 | 15 | 1.1 | 0.3 | 1 | --- |
| MPLJ 4 002 | M4 | 2 | 17 | 15 | 15 | 1.6 | 1 | 2 | --- |
| MPLJ 4 004 | M4 | 4 | 28 | 24 | 24 | 1.6 | 0.6 | 2 | --- |
| MPLJ 5 003 | M5 | 3 | 23 | 20 | 20 | 2 | 2 | 10 | LPJ 1 |
| MPLJ 5 005 | M5 | 5 | 32 | 27 | 27 | 2 | 2 | 10 | LPJ 1 |
| MPLJ 6 003 | M6 | 3 | 28 | 25 | 25 | 2.5 | 6 | 10 | LPJ 1 |
| MPLJ 6 005 | M6 | 5 | 35 | 30 | 30 | 2.5 | 2 | 10 | LPJ 1 |
| MPLJ 8 003 | M8 | 3 | 28 | 25 | 25 | 3.1 | 6 | 10 | LPJ 2 |
| MPLJ 8 005 | M8 | 5 | 32 | 27 | 27 | 3.1 | 3 | 10 | LPJ 2 |
| MPLJ 10 005 | M10 | 5 | 35 | 30 | 30 | 3.8 | 6 | 15 | LPJ 2 |
| MPLJ 10 010 | M10 | 10 | 53 | 43 | 30 | 3.8 | 3 | 15 | LPJ 2 |
| MPLJ 12 005 | M12 | 5 | 35 | 30 | 30 | 5.5 | 6 | 15 | LPJ 3 |
| MPLJ 12 010 | M12 | 10 | 53 | 43 | 35 | 5.5 | 3 | 20 | LPJ 3 |
| MPLJ 12 015 | M12 | 15 | 66 | 51 | 35 | 5.5 | 3 | 20 | LPJ 3 |
| MPLJ 16 010 | M16 | 10 | 70 | 60 | 35 | 8 | 6 | 40 | LPJ 4 |
| MPLJ 16 015 | M16 | 15 | 75 | 60 | 35 | 8 | 4 | 40 | LPJ 4 |
| MPLJ 16 020 | M16 | 20 | 105 | 85 | 35 | 8 | 5 | 40 | LPJ 4 |
| MPLJ 16 030 | M16 | 30 | 155 | 125 | 35 | 8 | 3 | 40 | LPJ 4 |
| MPLJ 20 015 | M20 | 15 | 75 | 60 | 45 | 10 | 13 | 80 | LPJ 5 |
| MPLJ 24 015 | M24 | 15 | 75 | 60 | 45 | 10 | 20 | 98 | LPJ 5 |



| | |
|---|---|
| ENG | ORDER |
| DEU | BESTELL |
| FRA | COMMANDE |
| ITA | ORDINE |
| ESP | PEDIDO |
| POR | PEDIDO |

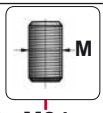


MPLJ M24 15

MPLJ 24 015

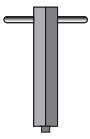

LPJ _ _

# MPHJ / MPXJ

*Spring Plungers*

AZOL GAS

## MPHJ

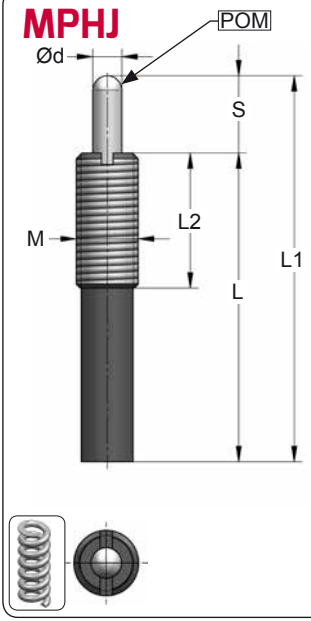


| ORDER | M | S (mm) | L1 (mm) | L (mm) | L2 (mm) | Ød (mm) | $F_0$ (N) | $F_1$ (N) | Key |
|---|---|---|---|---|---|---|---|---|---|
| MPHJ 3 001 | M3 | 1.5 | 11.5 | 10 | 10 | 1.1 | 0.8 | 3 | --- |
| MPHJ 3 003 | M3 | 3 | 18 | 15 | 15 | 1.1 | 0.8 | 3 | --- |
| MPHJ 4 002 | M4 | 2 | 17 | 15 | 15 | 1.6 | 3 | 9 | --- |
| MPHJ 4 004 | M4 | 4 | 28 | 24 | 24 | 1.6 | 2 | 9 | --- |
| MPHJ 5 003 | M5 | 3 | 23 | 20 | 20 | 2 | 5 | 20 | LPJ 1 |
| MPHJ 5 005 | M5 | 5 | 32 | 27 | 27 | 2 | 3 | 20 | LPJ 1 |
| MPHJ 6 003 | M6 | 3 | 28 | 25 | 25 | 2.5 | 8 | 30 | LPJ 1 |
| MPHJ 6 005 | M6 | 5 | 35 | 30 | 30 | 2.5 | 5 | 30 | LPJ 1 |
| MPHJ 8 003 | M8 | 3 | 28 | 25 | 25 | 3.1 | 15 | 30 | LPJ 2 |
| MPHJ 8 005 | M8 | 5 | 32 | 27 | 27 | 3.1 | 8 | 30 | LPJ 2 |
| MPHJ 10 005 | M10 | 5 | 35 | 30 | 30 | 3.8 | 9 | 50 | LPJ 2 |
| MPHJ 10 010 | M10 | 10 | 53 | 43 | 30 | 3.8 | 8 | 50 | LPJ 2 |
| MPHJ 12 005 | M12 | 5 | 35 | 30 | 30 | 5.5 | 19 | 50 | LPJ 3 |
| MPHJ 12 010 | M12 | 10 | 53 | 43 | 35 | 5.5 | 8 | 50 | LPJ 3 |
| MPHJ 12 015 | M12 | 15 | 66 | 51 | 35 | 5.5 | 5 | 50 | LPJ 3 |
| MPHJ 16 010 | M16 | 10 | 70 | 60 | 35 | 8 | 13 | 80 | LPJ 4 |
| MPHJ 16 015 | M16 | 15 | 75 | 60 | 35 | 8 | 13 | 80 | LPJ 4 |
| MPHJ 16 020 | M16 | 20 | 105 | 85 | 35 | 8 | 10 | 80 | LPJ 4 |
| MPHJ 16 030 | M16 | 30 | 155 | 125 | 35 | 8 | 7 | 80 | LPJ 4 |
| MPHJ 20 015 | M20 | 15 | 75 | 60 | 45 | 10 | 25 | 150 | LPJ 5 |
| MPHJ 24 015 | M24 | 15 | 75 | 60 | 45 | 10 | 47 | 216 | LPJ 5 |



## MPXJ

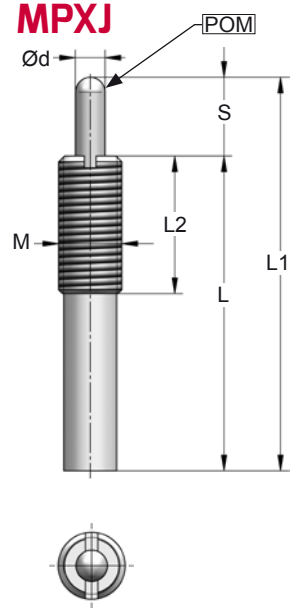


| ORDER | M | S (mm) | L1 (mm) | L (mm) | L2 (mm) | Ød (mm) | $F_0$ (N) | $F_1$ (N) | Key |
|---|---|---|---|---|---|---|---|---|---|
| MPXJ 3 001 | M3 | 1.5 | 16.5 | 15 | 15 | 1.1 | 2 | 5 | --- |
| MPXJ 3 003 | M3 | 3 | 23 | 20 | 20 | 1.1 | 2 | 5 | --- |
| MPXJ 4 002 | M4 | 2 | 26 | 24 | 24 | 1.6 | 5 | 13 | --- |
| MPXJ 4 004 | M4 | 4 | 28 | 24 | 24 | 1.6 | 5 | 13 | --- |
| MPXJ 5 003 | M5 | 3 | 30 | 27 | 27 | 2 | 9 | 25 | LPJ 1 |
| MPXJ 5 005 | M5 | 5 | 44 | 39 | 39 | 2 | 9 | 25 | LPJ 1 |
| MPXJ 6 003 | M6 | 3 | 33 | 30 | 30 | 2.5 | 14 | 39 | LPJ 1 |
| MPXJ 6 005 | M6 | 5 | 41 | 36 | 36 | 2.5 | 14 | 39 | LPJ 1 |
| MPXJ 8 003 | M8 | 3 | 30 | 27 | 27 | 3.1 | 15 | 41 | LPJ 2 |
| MPXJ 8 005 | M8 | 5 | 40 | 35 | 30 | 3.1 | 15 | 41 | LPJ 2 |
| MPXJ 10 005 | M10 | 5 | 40 | 35 | 30 | 3.8 | 16 | 63 | LPJ 2 |
| MPXJ 10 010 | M10 | 10 | 63 | 53 | 30 | 3.8 | 13 | 63 | LPJ 2 |
| MPXJ 12 005 | M12 | 5 | 48 | 43 | 35 | 5.5 | 37 | 98 | LPJ 3 |
| MPXJ 12 010 | M12 | 10 | 68 | 58 | 35 | 5.5 | 15 | 98 | LPJ 3 |
| MPXJ 12 015 | M12 | 15 | 93 | 78 | 35 | 5.5 | 15 | 98 | LPJ 3 |
| MPXJ 16 010 | M16 | 10 | 70 | 60 | 35 | 8 | 24 | 147 | LPJ 4 |
| MPXJ 16 015 | M16 | 15 | 85 | 70 | 35 | 8 | 22 | 147 | LPJ 4 |
| MPXJ 16 020 | M16 | 20 | 110 | 90 | 35 | 8 | 13 | 147 | LPJ 4 |







| | |
|---|---|
| ENG | ORDER |
| DEU | BESTELL |
| FRA | COMMANDE |
| ITA | ORDINE |
| ESP | PEDIDO |
| POR | PEDIDO |

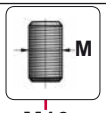


MPXJ M16 20

MPXJ 16 020

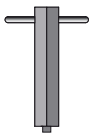

LPJ _ _

AZOL GAS

# MBSN / MBLN

*Spring Plungers*

## MBSN

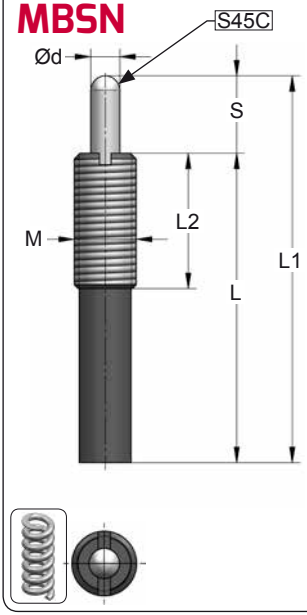


| ORDER | M | S (mm) | L1 (mm) | L (mm) | L2 (mm) | Ød (mm) | $F_0$ (N) | $F_1$ (N) | Key |
|---|---|---|---|---|---|---|---|---|---|
| MBSN 5 003 | M5 | 3 | 23 | 20 | 20 | 2 | 0.74 | 2.95 | LPJ 1 |
| MBSN 5 005 | M5 | 5 | 32 | 27 | 27 | 2 | 0.72 | 2.95 | LPJ 1 |
| MBSN 6 003 | M6 | 3 | 28 | 25 | 25 | 2.5 | 0.85 | 3.2 | LPJ 1 |
| MBSN 6 005 | M6 | 5 | 35 | 30 | 30 | 2.5 | 0.85 | 3.2 | LPJ 1 |
| MBSN 8 003 | M8 | 3 | 28 | 25 | 25 | 3.1 | 0.9 | 3.3 | LPJ 2 |
| MBSN 8 005 | M8 | 5 | 32 | 27 | 27 | 3.1 | 0.9 | 3.3 | LPJ 2 |
| MBSN 10 005 | M10 | 5 | 35 | 30 | 30 | 3.8 | 1.9 | 4.7 | LPJ 2 |
| MBSN 10 010 | M10 | 10 | 53 | 43 | 30 | 3.8 | 1.7 | 4.7 | LPJ 2 |
| MBSN 12 005 | M12 | 5 | 35 | 30 | 30 | 5.5 | 1.5 | 4.7 | LPJ 3 |
| MBSN 12 010 | M12 | 10 | 53 | 43 | 35 | 5.5 | 1.3 | 5.9 | LPJ 3 |
| MBSN 12 015 | M12 | 15 | 66 | 51 | 35 | 5.5 | 1.6 | 5.9 | LPJ 3 |
| MBSN 16 010 | M16 | 10 | 70 | 60 | 35 | 8 | 1.7 | 12.8 | LPJ 4 |
| MBSN 16 015 | M16 | 15 | 75 | 60 | 35 | 8 | 1.7 | 12.8 | LPJ 4 |
| MBSN 16 020 | M16 | 20 | 105 | 85 | 35 | 8 | 1.7 | 12.8 | LPJ 4 |

## MBLN

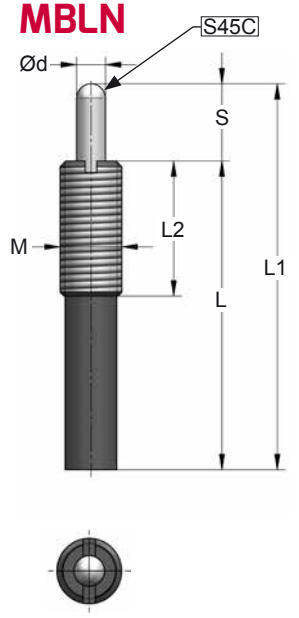


| ORDER | M | S (mm) | L1 (mm) | L (mm) | L2 (mm) | Ød (mm) | $F_0$ (N) | $F_1$ (N) | Key |
|---|---|---|---|---|---|---|---|---|---|
| MBLN 5 003 | M5 | 3 | 23 | 20 | 20 | 2 | 2 | 10 | LPJ 1 |
| MBLN 5 005 | M5 | 5 | 32 | 27 | 27 | 2 | 2 | 10 | LPJ 1 |
| MBLN 6 003 | M6 | 3 | 28 | 25 | 25 | 2.5 | 6 | 10 | LPJ 1 |
| MBLN 6 005 | M6 | 5 | 35 | 30 | 30 | 2.5 | 2 | 10 | LPJ 1 |
| MBLN 8 003 | M8 | 3 | 28 | 25 | 25 | 3.1 | 6 | 10 | LPJ 2 |
| MBLN 8 005 | M8 | 5 | 32 | 27 | 27 | 3.1 | 3 | 10 | LPJ 2 |
| MBLN 10 005 | M10 | 5 | 35 | 30 | 30 | 3.8 | 6 | 15 | LPJ 2 |
| MBLN 10 010 | M10 | 10 | 53 | 43 | 30 | 3.8 | 3 | 15 | LPJ 2 |
| MBLN 12 005 | M12 | 5 | 35 | 30 | 30 | 5.5 | 6 | 15 | LPJ 3 |
| MBLN 12 010 | M12 | 10 | 53 | 43 | 35 | 5.5 | 3 | 20 | LPJ 3 |
| MBLN 12 015 | M12 | 15 | 66 | 51 | 35 | 5.5 | 3 | 20 | LPJ 3 |
| MBLN 16 010 | M16 | 10 | 70 | 60 | 35 | 8 | 6 | 40 | LPJ 4 |
| MBLN 16 015 | M16 | 15 | 75 | 60 | 35 | 8 | 4 | 40 | LPJ 4 |
| MBLN 16 020 | M16 | 20 | 105 | 85 | 35 | 8 | 5 | 40 | LPJ 4 |

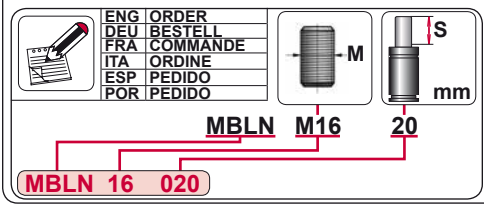

# MBHN / MBXN

*Spring Plungers*

AZOL GAS

## MBHN

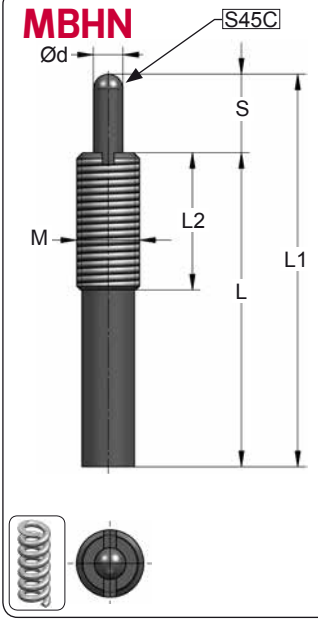


| ORDER | M | S (mm) | L1 (mm) | L (mm) | L2 (mm) | Ød (mm) | $F_0$ (N) | $F_1$ (N) | Key |
|---|---|---|---|---|---|---|---|---|---|
| MBHN 5 003 | M5 | 3 | 23 | 20 | 20 | 2 | 5 | 20 | LPJ 1 |
| MBHN 5 005 | M5 | 5 | 32 | 27 | 27 | 2 | 3 | 20 | LPJ 1 |
| MBHN 6 003 | M6 | 3 | 28 | 25 | 25 | 2.5 | 8 | 30 | LPJ 1 |
| MBHN 6 005 | M6 | 5 | 35 | 30 | 30 | 2.5 | 5 | 30 | LPJ 1 |
| MBHN 8 003 | M8 | 3 | 28 | 25 | 25 | 3.1 | 15 | 30 | LPJ 2 |
| MBHN 8 005 | M8 | 5 | 32 | 27 | 27 | 3.1 | 8 | 30 | LPJ 2 |
| MBHN 10 005 | M10 | 5 | 35 | 30 | 30 | 3.8 | 9 | 50 | LPJ 2 |
| MBHN 10 010 | M10 | 10 | 53 | 43 | 30 | 3.8 | 8 | 50 | LPJ 2 |
| MBHN 12 005 | M12 | 5 | 35 | 30 | 30 | 5.5 | 19 | 50 | LPJ 3 |
| MBHN 12 010 | M12 | 10 | 53 | 43 | 35 | 5.5 | 8 | 50 | LPJ 3 |
| MBHN 12 015 | M12 | 15 | 66 | 51 | 35 | 5.5 | 5 | 50 | LPJ 3 |
| MBHN 16 010 | M16 | 10 | 70 | 60 | 35 | 8 | 13 | 80 | LPJ 4 |
| MBHN 16 015 | M16 | 15 | 75 | 60 | 35 | 8 | 13 | 80 | LPJ 4 |
| MBHN 16 020 | M16 | 20 | 105 | 85 | 35 | 8 | 10 | 80 | LPJ 4 |



## MBXN

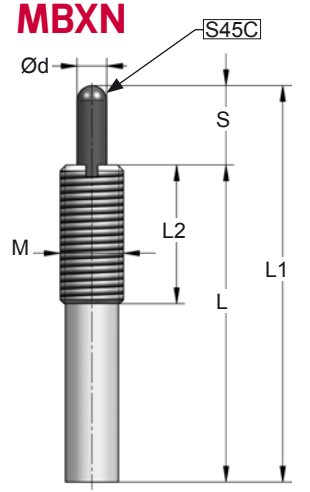


| ORDER | M | S (mm) | L1 (mm) | L (mm) | L2 (mm) | Ød (mm) | $F_0$ (N) | $F_1$ (N) | Key |
|---|---|---|---|---|---|---|---|---|---|
| MBXN 5 003 | M5 | 3 | 30 | 27 | 27 | 2 | 9 | 25 | LPJ 1 |
| MBXN 5 005 | M5 | 5 | 44 | 39 | 39 | 2 | 9 | 25 | LPJ 1 |
| MBXN 6 003 | M6 | 3 | 33 | 30 | 30 | 2.5 | 14 | 39 | LPJ 1 |
| MBXN 6 005 | M6 | 5 | 41 | 36 | 36 | 2.5 | 14 | 39 | LPJ 1 |
| MBXN 8 003 | M8 | 3 | 30 | 27 | 27 | 3.1 | 15 | 41 | LPJ 2 |
| MBXN 8 005 | M8 | 5 | 40 | 35 | 30 | 3.1 | 15 | 41 | LPJ 2 |
| MBXN 10 005 | M10 | 5 | 40 | 35 | 30 | 3.8 | 16 | 63 | LPJ 2 |
| MBXN 10 010 | M10 | 10 | 63 | 53 | 30 | 3.8 | 13 | 63 | LPJ 2 |
| MBXN 12 005 | M12 | 5 | 48 | 43 | 35 | 5.5 | 37 | 98 | LPJ 3 |
| MBXN 12 010 | M12 | 10 | 68 | 58 | 35 | 5.5 | 15 | 98 | LPJ 3 |
| MBXN 12 015 | M12 | 15 | 93 | 78 | 35 | 5.5 | 15 | 98 | LPJ 3 |
| MBXN 16 010 | M16 | 10 | 70 | 60 | 35 | 8 | 24 | 147 | LPJ 4 |
| MBXN 16 015 | M16 | 15 | 85 | 70 | 35 | 8 | 22 | 147 | LPJ 4 |
| MBXN 16 020 | M16 | 20 | 110 | 90 | 35 | 8 | 13 | 147 | LPJ 4 |





| | |
|---|---|
| ENG | ORDER |
| DEU | BESTELL |
| FRA | COMMANDE |
| ITA | ORDINE |
| ESP | PEDIDO |
| POR | PEDIDO |

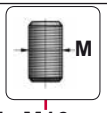


MBXN M16 20

MBXN 16 020

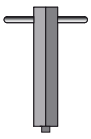

LPJ _ _

AZOL GAS

# MPNS / MPNL

*Spring Plungers*

## MPNS

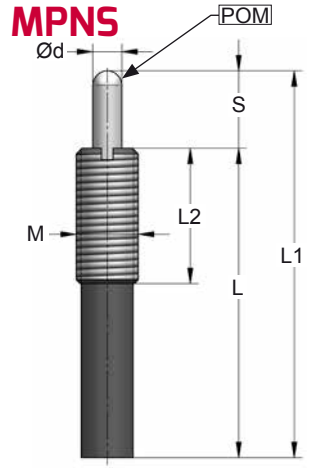


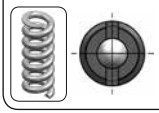

| ORDER | M | S (mm) | L1 (mm) | L (mm) | L2 (mm) | Ød (mm) | $F_0$ (N) | $F_1$ (N) | Key |
|---|---|---|---|---|---|---|---|---|---|
| MPNS 5 003 | M5 | 3 | 23 | 20 | 20 | 2 | 0.74 | 2.95 | LPJ 1 |
| MPNS 5 005 | M5 | 5 | 32 | 27 | 27 | 2 | 0.72 | 2.95 | LPJ 1 |
| MPNS 6 003 | M6 | 3 | 28 | 25 | 25 | 2.5 | 0.85 | 3.2 | LPJ 1 |
| MPNS 6 005 | M6 | 5 | 35 | 30 | 30 | 2.5 | 0.85 | 3.2 | LPJ 1 |
| MPNS 8 003 | M8 | 3 | 28 | 25 | 25 | 3.1 | 0.9 | 3.3 | LPJ 2 |
| MPNS 8 005 | M8 | 5 | 32 | 27 | 27 | 3.1 | 0.9 | 3.3 | LPJ 2 |
| MPNS 10 005 | M10 | 5 | 35 | 30 | 30 | 3.8 | 1.9 | 4.7 | LPJ 2 |
| MPNS 10 010 | M10 | 10 | 53 | 43 | 30 | 3.8 | 1.7 | 4.7 | LPJ 2 |
| MPNS 12 005 | M12 | 5 | 35 | 30 | 30 | 5.5 | 1.5 | 4.7 | LPJ 3 |
| MPNS 12 010 | M12 | 10 | 53 | 43 | 35 | 5.5 | 1.3 | 5.9 | LPJ 3 |
| MPNS 12 015 | M12 | 15 | 66 | 51 | 35 | 5.5 | 1.6 | 5.9 | LPJ 3 |
| MPNS 16 010 | M16 | 10 | 70 | 60 | 35 | 8 | 1.7 | 12.8 | LPJ 4 |
| MPNS 16 015 | M16 | 15 | 75 | 60 | 35 | 8 | 1.7 | 12.8 | LPJ 4 |
| MPNS 16 020 | M16 | 20 | 105 | 85 | 35 | 8 | 1.7 | 12.8 | LPJ 4 |

## MPNL

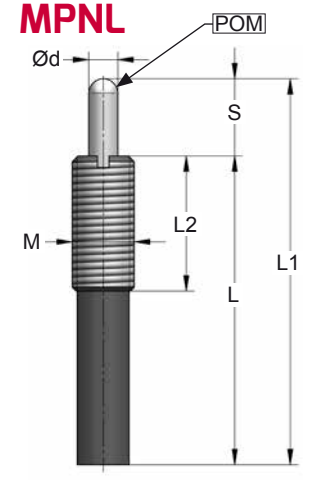


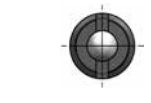

| ORDER | M | S (mm) | L1 (mm) | L (mm) | L2 (mm) | Ød (mm) | $F_0$ (N) | $F_1$ (N) | Key |
|---|---|---|---|---|---|---|---|---|---|
| MPNL 5 003 | M5 | 3 | 23 | 20 | 20 | 2 | 2 | 10 | LPJ 1 |
| MPNL 5 005 | M5 | 5 | 32 | 27 | 27 | 2 | 2 | 10 | LPJ 1 |
| MPNL 6 003 | M6 | 3 | 28 | 25 | 25 | 2.5 | 6 | 10 | LPJ 1 |
| MPNL 6 005 | M6 | 5 | 35 | 30 | 30 | 2.5 | 2 | 10 | LPJ 1 |
| MPNL 8 003 | M8 | 3 | 28 | 25 | 25 | 3.1 | 6 | 10 | LPJ 2 |
| MPNL 8 005 | M8 | 5 | 32 | 27 | 27 | 3.1 | 3 | 10 | LPJ 2 |
| MPNL 10 005 | M10 | 5 | 35 | 30 | 30 | 3.8 | 6 | 15 | LPJ 2 |
| MPNL 10 010 | M10 | 10 | 53 | 43 | 30 | 3.8 | 3 | 15 | LPJ 2 |
| MPNL 12 005 | M12 | 5 | 35 | 30 | 30 | 5.5 | 6 | 15 | LPJ 3 |
| MPNL 12 010 | M12 | 10 | 53 | 43 | 35 | 5.5 | 3 | 20 | LPJ 3 |
| MPNL 12 015 | M12 | 15 | 66 | 51 | 35 | 5.5 | 3 | 20 | LPJ 3 |
| MPNL 16 010 | M16 | 10 | 70 | 60 | 35 | 8 | 6 | 40 | LPJ 4 |
| MPNL 16 015 | M16 | 15 | 75 | 60 | 35 | 8 | 4 | 40 | LPJ 4 |
| MPNL 16 020 | M16 | 20 | 105 | 85 | 35 | 8 | 5 | 40 | LPJ 4 |

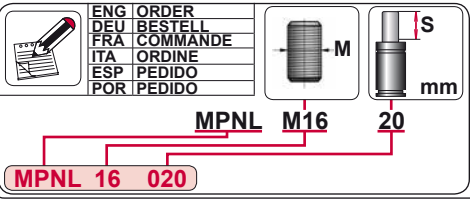


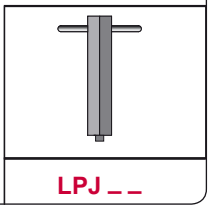

# MPNH

*Spring Plungers*

AZOL GAS

## MPNH

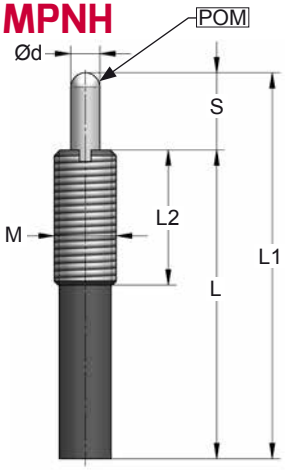




| ORDER | M | S (mm) | L1 (mm) | L (mm) | L2 (mm) | Ød (mm) | $F_0$ (N) | $F_1$ (N) | Key |
|---|---|---|---|---|---|---|---|---|---|
| MPNH 5 003 | M5 | 3 | 23 | 20 | 20 | 2 | 5 | 20 | LPJ 1 |
| MPNH 5 005 | M5 | 5 | 32 | 27 | 27 | 2 | 3 | 20 | LPJ 1 |
| MPNH 6 003 | M6 | 3 | 28 | 25 | 25 | 2.5 | 8 | 30 | LPJ 1 |
| MPNH 6 005 | M6 | 5 | 35 | 30 | 30 | 2.5 | 5 | 30 | LPJ 1 |
| MPNH 8 003 | M8 | 3 | 28 | 25 | 25 | 3.1 | 15 | 30 | LPJ 2 |
| MPNH 8 005 | M8 | 5 | 32 | 27 | 27 | 3.1 | 8 | 30 | LPJ 2 |
| MPNH 10 005 | M10 | 5 | 35 | 30 | 30 | 3.8 | 9 | 50 | LPJ 2 |
| MPNH 10 010 | M10 | 10 | 53 | 43 | 30 | 3.8 | 8 | 50 | LPJ 2 |
| MPNH 12 005 | M12 | 5 | 35 | 30 | 30 | 5.5 | 19 | 50 | LPJ 3 |
| MPNH 12 010 | M12 | 10 | 53 | 43 | 35 | 5.5 | 8 | 50 | LPJ 3 |
| MPNH 12 015 | M12 | 15 | 66 | 51 | 35 | 5.5 | 5 | 50 | LPJ 3 |
| MPNH 16 010 | M16 | 10 | 70 | 60 | 35 | 8 | 13 | 80 | LPJ 4 |
| MPNH 16 015 | M16 | 15 | 75 | 60 | 35 | 8 | 13 | 80 | LPJ 4 |
| MPNH 16 020 | M16 | 20 | 105 | 85 | 35 | 8 | 10 | 80 | LPJ 4 |



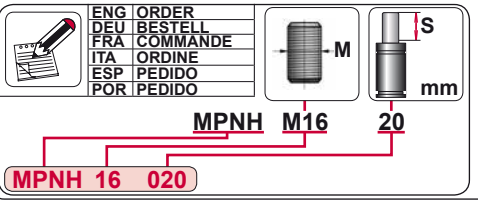


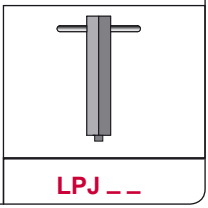

AZOL GAS

# EXU
*Flange Strippers*

AZOL GAS

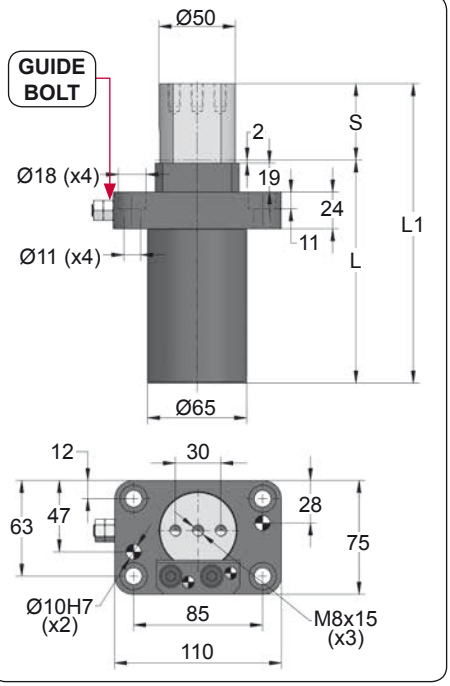


| ORDER | S (mm) | L1 ±0,25 (mm) | L (mm) | Kg. |
|---|---|---|---|---|
| EXU ___ 050 | 50 | 196 | 146 | 4.15 |
| EXU ___ 080 | 80 | 256 | 176 | 5.01 |
| EXU ___ 100 | 100 | 296 | 196 | 5.41 |

## SPARE PARTS

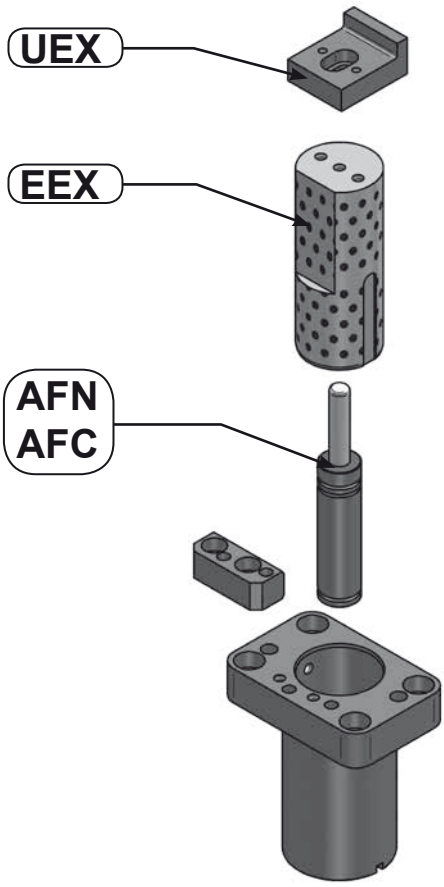


| CODE | COLOR | bar | psi | $F_0$ daN | $F_1$ daN |
|---|---|---|---|---|---|
| EXU 50 050 | Green | 45 | 650 | 50 | 75 |
| EXU 100 050 | Blue | 90 | 1305 | 100 | 155 |
| EXU 150 050 | Red | 135 | 1960 | 150 | 230 |
| EXU 200 050 | Yellow | 180 | 2610 | 200 | 305 |

| | ENG | ORDER |
|---|---|---|
| | DEU | BESTELL |
| | FRA | COMMANDE |
| | ITA | ORDINE |
| | ESP | PEDIDO |
| | POR | PEDIDO |

$F_0$ daN — S mm

EXU 200 50

EXU 200 050

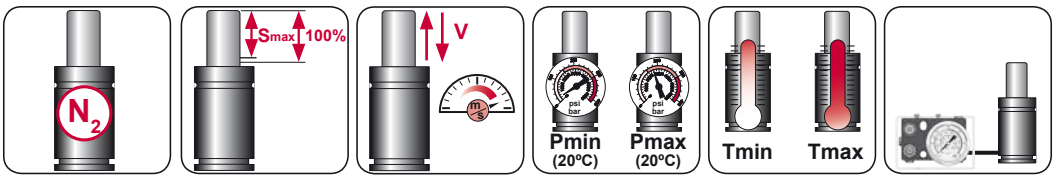


| $N_2$ | Smax < 90% | Vmax 1,6 m/s | bar psi 20 290 | bar psi 180 2610 | °C °F 0 32 | °C °F 80 176 | |
|---|---|---|---|---|---|---|---|

AZOL GAS

# EXU
*Flange Strippers*

## UEX

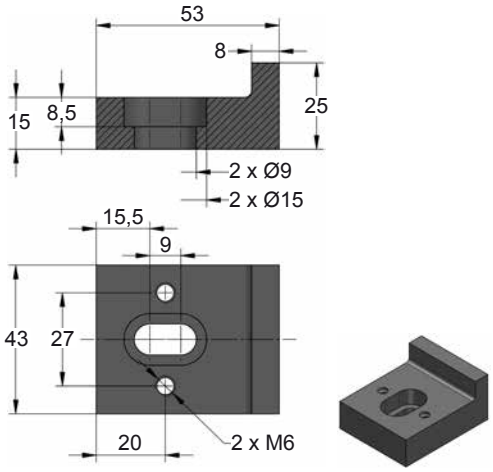


## EEX-_ _ _-

Serial Number

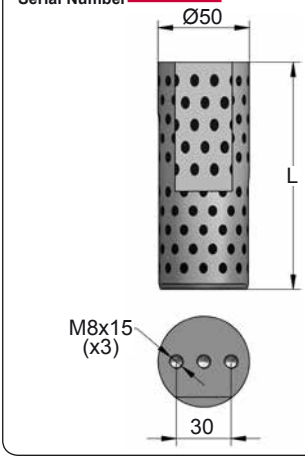


| ORDER | S (mm) | L (mm) |
|---|---|---|
| EEX-050 | 50 | 125 |
| EEX-080 | 80 | 155 |
| EEX-100 | 100 | 175 |



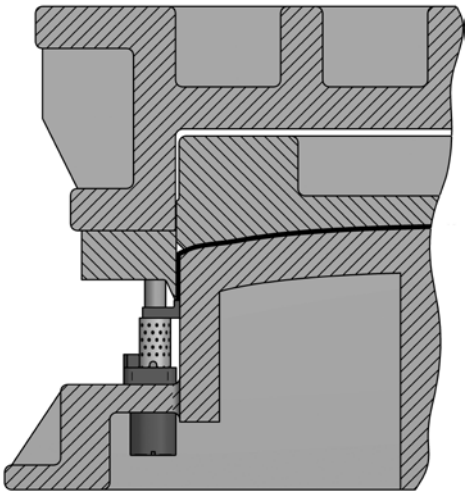

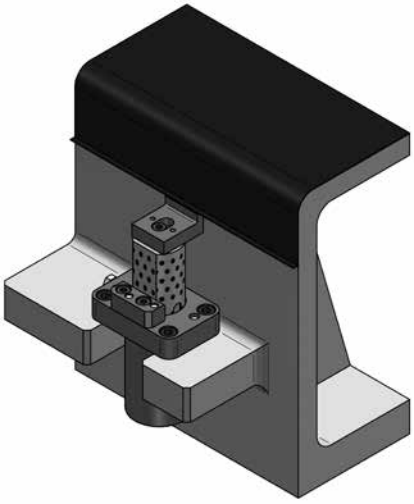



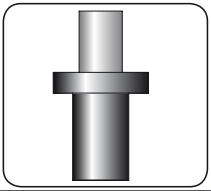

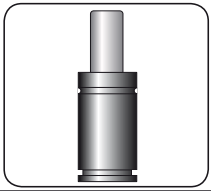

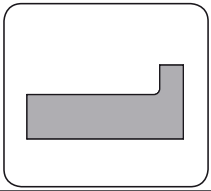

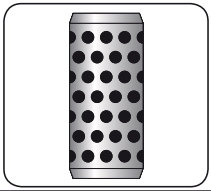

| CODE | | EXU 200 050 | AFN 200 050<br>AFC 200 100 | UEX | EEX-050-<br>Serial Number |
|---|---|---|---|---|---|
| ENG | ORDER | FLANGE STRIPPER | GAS SPRING | CAP | ROD |
| DEU | BESTELL | ABSTREIFER | GASDRUCKFEDER | ADAPTER | KOLBENSTANGE |
| FRA | COMMANDE | EXTRACTEUR | RESSORT À GAZ | LAME D´EXTRACTIEN | TIGE |
| ITA | ORDINE | ESTRATTORE | CILINDRO AD AZOTO | ADATTATORE | STELO |
| ESP | PEDIDO | EXTRACTOR | RESORTE DE GAS | UÑA | EJE |
| POR | PEDIDO | LEVANTADOR | CILINDRO DE GÁS | ADAPTADOR | HASTE |

# EXY

*Flange Strippers*

AZOL GAS

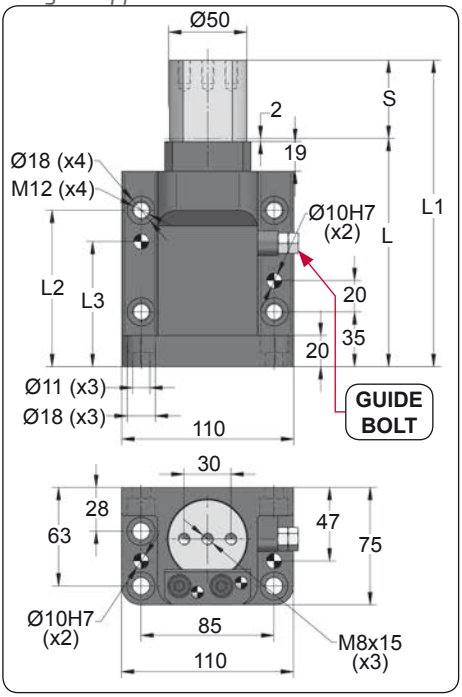


| ORDER | S (mm) | L1 ±0,25 (mm) | L (mm) | L2 (mm) | L3 (mm) | Kg. |
|---|---|---|---|---|---|---|
| EXY ___ 050 | 50 | 196 | 146 | 100 | 80 | 5.47 |
| EXY ___ 080 | 80 | 256 | 176 | 130 | 110 | 6.83 |
| EXY ___ 100 | 100 | 296 | 196 | 150 | 130 | 7.56 |

## SPARE PARTS

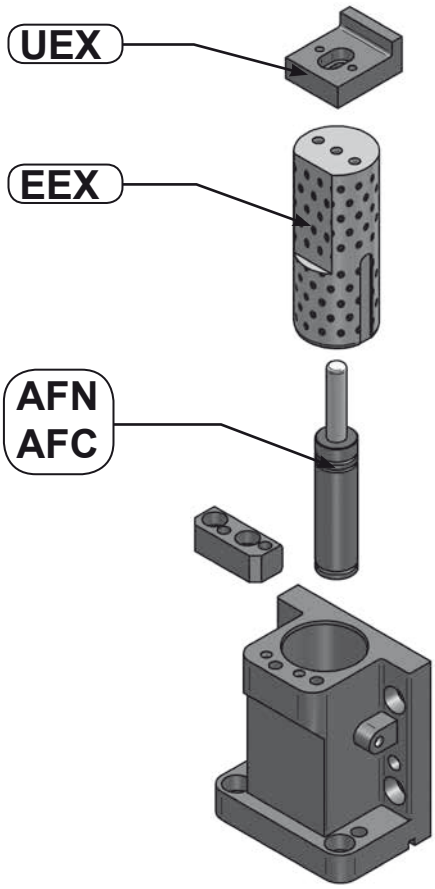


| CODE | COLOR | bar | psi | $F_0$ daN | $F_1$ daN |
|---|---|---|---|---|---|
| EXY 50 050 | Green | 45 | 650 | 50 | 75 |
| EXY 100 050 | Blue | 90 | 1305 | 100 | 155 |
| EXY 150 050 | Red | 135 | 1960 | 150 | 230 |
| EXY 200 050 | Yellow | 180 | 2610 | 200 | 305 |

| ENG | ORDER |
|---|---|
| DEU | BESTELL |
| FRA | COMMANDE |
| ITA | ORDINE |
| ESP | PEDIDO |
| POR | PEDIDO |

$F_0$ daN — S mm

EXY 200 50

EXY 200 050

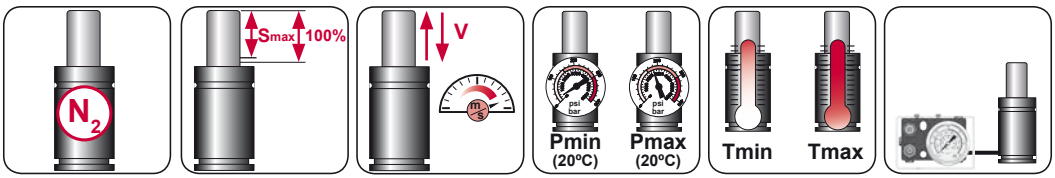


| $N_2$ | Smax < 90% | Vmax 1,6 m/s | bar psi 20 290 | bar psi 180 2610 | °C °F 0 32 | °C °F 80 176 | |
|---|---|---|---|---|---|---|---|

AZOL GAS

# EXY
*Flange Strippers*

## UEX

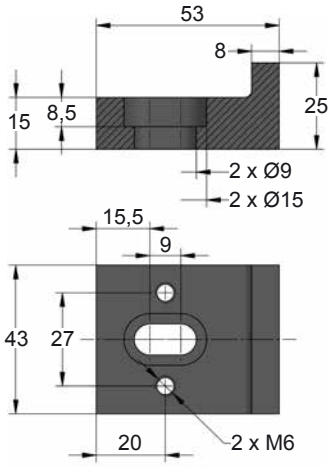


## EEX-_ _ _-

Serial Number

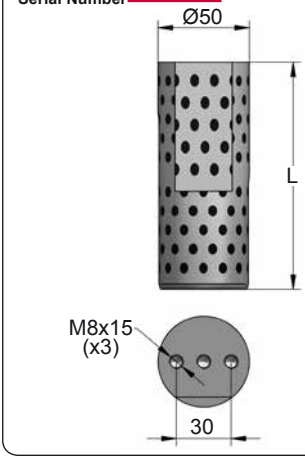


| ORDER | S (mm) | L (mm) |
|---|---|---|
| EEX-050 | 50 | 125 |
| EEX-080 | 80 | 155 |
| EEX-100 | 100 | 175 |



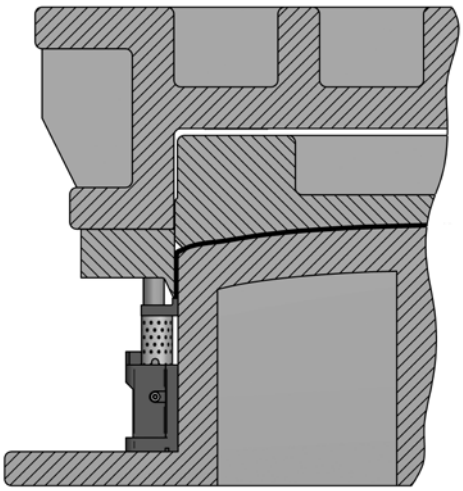

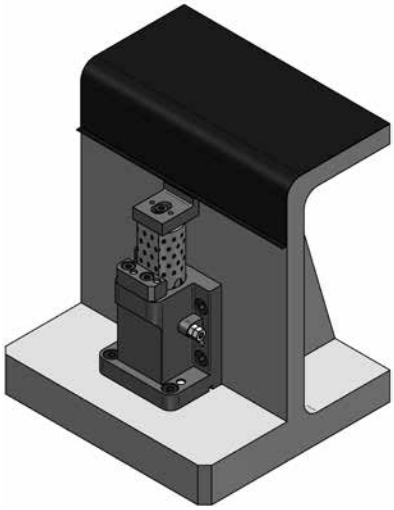



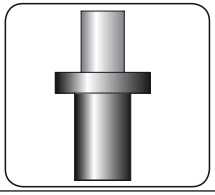

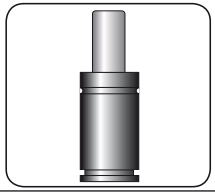

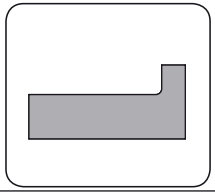

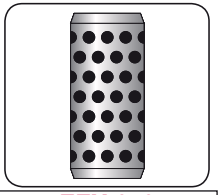

| CODE | | EXY 200 050 | AFN 200 050<br>AFC 200 100 | UEX | EEX-050-<br>Serial Number |
|---|---|---|---|---|---|
| ENG | ORDER | FLANGE STRIPPER | GAS SPRING | CAP | ROD |
| DEU | BESTELL | ABSTREIFER | GASDRUCKFEDER | ADAPTER | KOLBENSTANGE |
| FRA | COMMANDE | EXTRACTEUR | RESSORT À GAZ | LAME D´EXTRACTIEN | TIGE |
| ITA | ORDINE | ESTRATTORE | CILINDRO AD AZOTO | ADATTATORE | STELO |
| ESP | PEDIDO | EXTRACTOR | RESORTE DE GAS | UÑA | EJE |
| POR | PEDIDO | LEVANTADOR | CILINDRO DE GÁS | ADAPTADOR | HASTE |

# EXP
*Flange Strippers*

| | | PSA E24.57.420 |
|---|---|---|
| | | |
| | | |

AZOL GAS

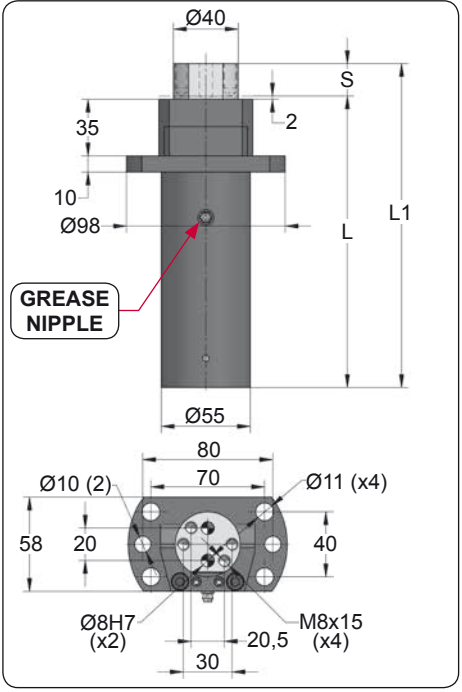


| ORDER | S (mm) | L1 ±0,25 (mm) | L (mm) | Kg. |
|---|---|---|---|---|
| EXP ___ 050 | 50 | 200 | 150 | 2.30 |
| EXP ___ 080 | 80 | 260 | 180 | 2.82 |

## SPARE PARTS

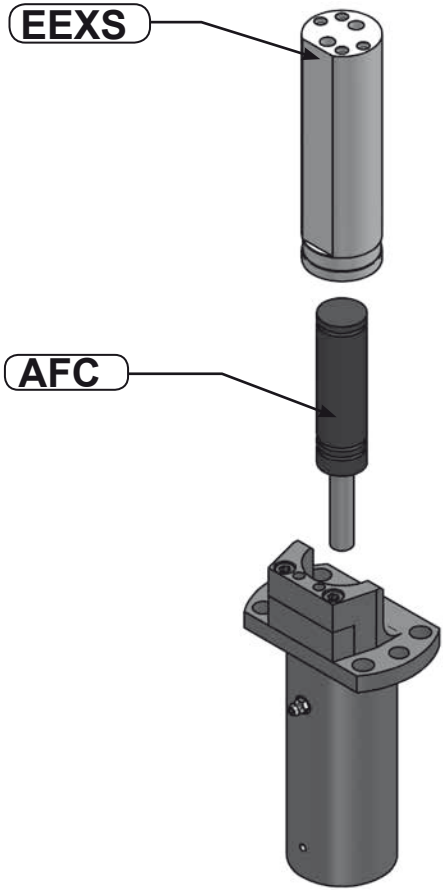


| CODE | COLOR | bar | psi | $F_0$ daN | $F_1$ daN |
|---|---|---|---|---|---|
| EXP 50 050 | Green | 45 | 650 | 50 | 75 |
| EXP 100 050 | Blue | 90 | 1305 | 100 | 155 |
| EXP 150 050 | Red | 135 | 1960 | 150 | 230 |
| EXP 200 050 | Yellow | 180 | 2610 | 200 | 305 |

| ENG | ORDER |
|---|---|
| DEU | BESTELL |
| FRA | COMMANDE |
| ITA | ORDINE |
| ESP | PEDIDO |
| POR | PEDIDO |

$F_0$ daN — S mm

EXP 200 50

EXP 200 050

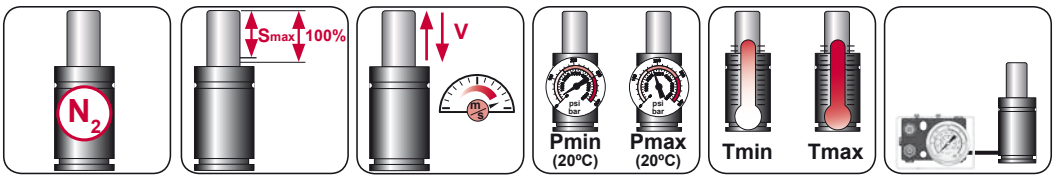


| $N_2$ | Smax < 90% | Vmax 1,6 m/s | bar psi 20 290 | bar psi 180 2610 | °C °F 0 32 | °C °F 80 176 | |
|---|---|---|---|---|---|---|---|

AZOL GAS

# EXP
Flange Strippers

**EEXS-_ _ _-**
Serial Number

| ORDER | S (mm) | L (mm) |
|---|---|---|
| EEXS-050 | 50 | 137 |
| EEXS-080 | 80 | 167 |

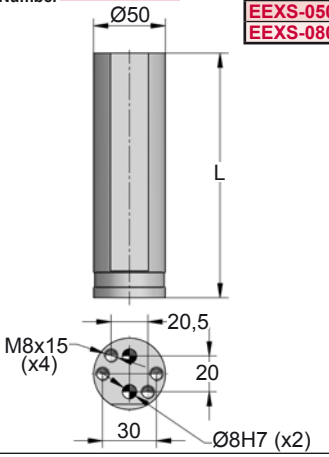




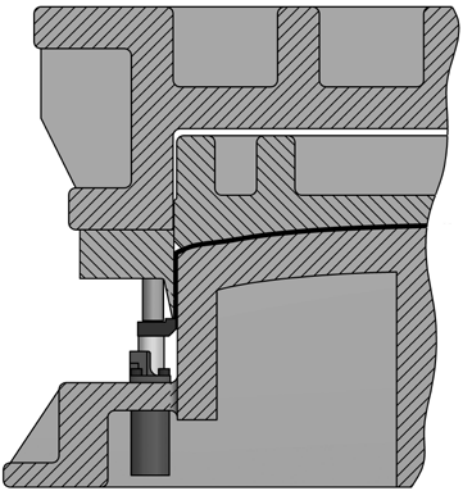

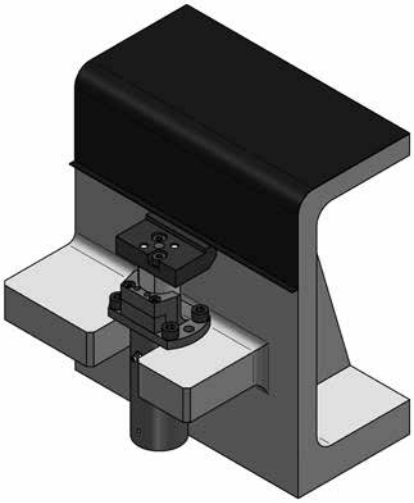



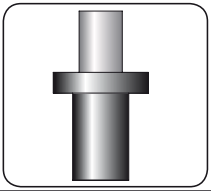

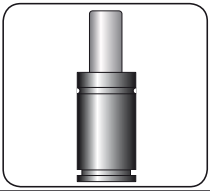

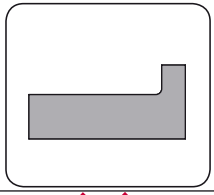

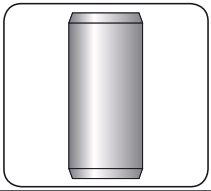

| CODE | | EXP 200 050 | AFC 200 050 | | EEXS-050- Serial Number |
|---|---|---|---|---|---|
| ENG | ORDER | FLANGE STRIPPER | GAS SPRING | CAP | ROD |
| DEU | BESTELL | ABSTREIFER | GASDRUCKFEDER | ADAPTER | KOLBENSTANGE |
| FRA | COMMANDE | EXTRACTEUR | RESSORT À GAZ | LAME D´EXTRACTIEN | TIGE |
| ITA | ORDINE | ESTRATTORE | CILINDRO AD AZOTO | ADATTATORE | STELO |
| ESP | PEDIDO | EXTRACTOR | RESORTE DE GAS | UÑA | EJE |
| POR | PEDIDO | LEVANTADOR | CILINDRO DE GÁS | ADAPTADOR | HASTE |

# EXS
*Flange Strippers*

| | | PSA E24.57.420 |
|---|---|---|
| | | |
| | | |

AZOL GAS

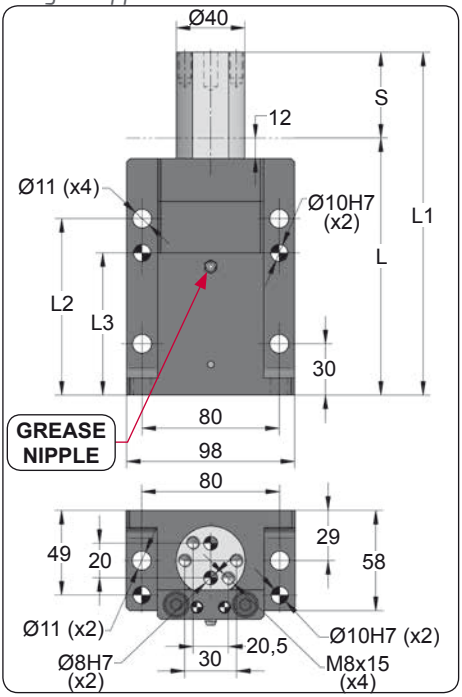


| ORDER | S (mm) | L1 ±0,25 (mm) | L (mm) | L2 (mm) | L3 (mm) | Kg. |
|---|---|---|---|---|---|---|
| EXS ___ 050 | 50 | 200 | 150 | 103 | 83 | 4.38 |
| EXS ___ 080 | 80 | 260 | 180 | 133 | 113 | 5.50 |

## SPARE PARTS

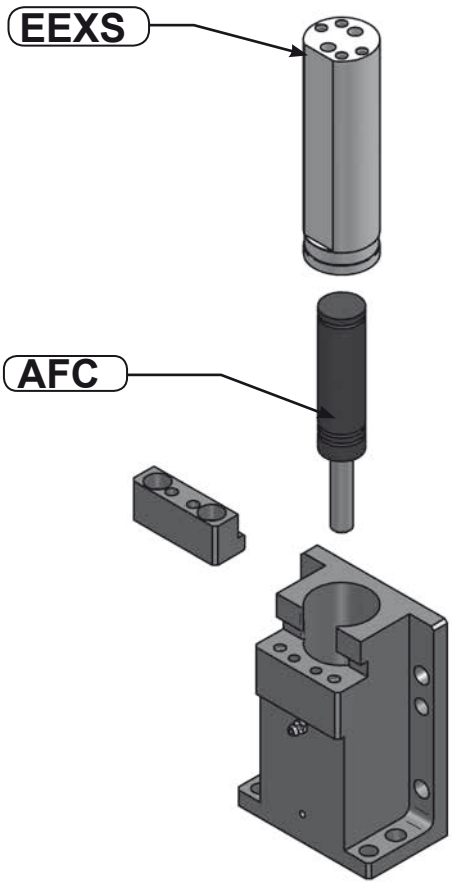


| CODE | COLOR | bar | psi | $F_0$ daN | $F_1$ daN |
|---|---|---|---|---|---|
| EXS 50 050 | Green | 45 | 650 | 50 | 75 |
| EXS 100 050 | Blue | 90 | 1305 | 100 | 155 |
| EXS 150 050 | Red | 135 | 1960 | 150 | 230 |
| EXS 200 050 | Yellow | 180 | 2610 | 200 | 305 |

| | |
|---|---|
| ENG | ORDER |
| DEU | BESTELL |
| FRA | COMMANDE |
| ITA | ORDINE |
| ESP | PEDIDO |
| POR | PEDIDO |

$F_0$ daN — S mm

EXS 200 50

EXS 200 050

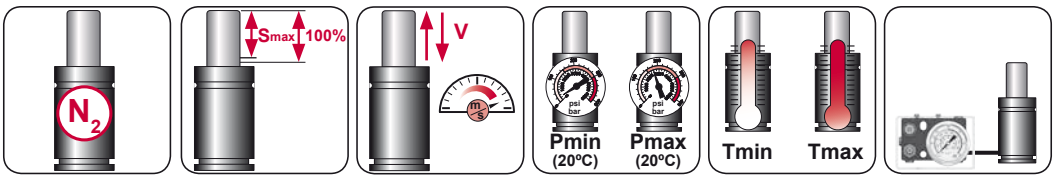


| $N_2$ | Smax < 90% | Vmax 1,6 m/s | bar psi 20 290 | bar psi 180 2610 | °C °F 0 32 | °C °F 80 176 | |
|---|---|---|---|---|---|---|---|

AZOL GAS

# EXS
Flange Strippers

**EEXS-_ _ _-**
Serial Number

| ORDER | S (mm) | L (mm) |
|---|---|---|
| EEXS-050 | 50 | 137 |
| EEXS-080 | 80 | 167 |

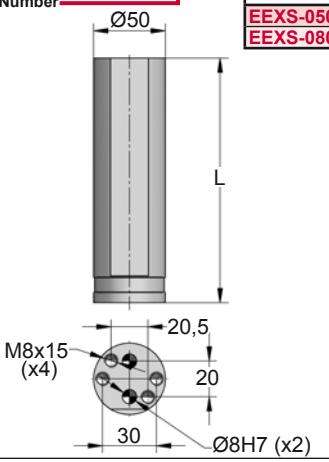


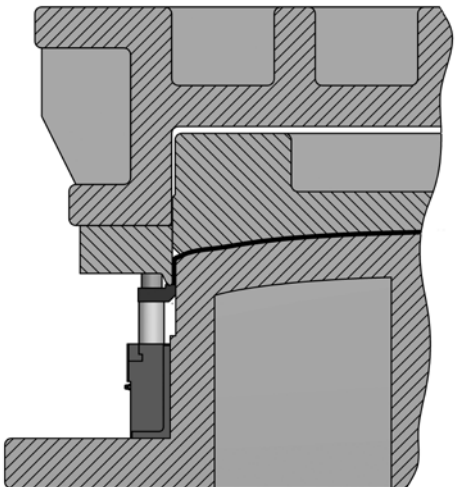

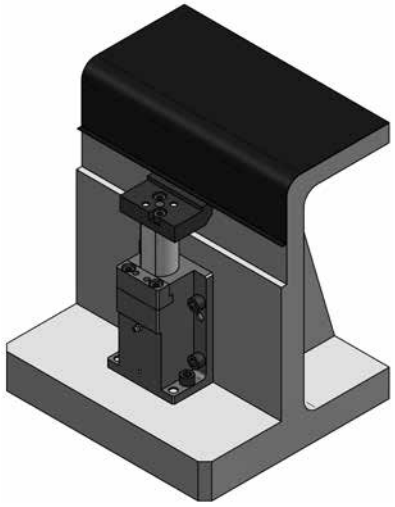



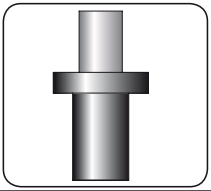

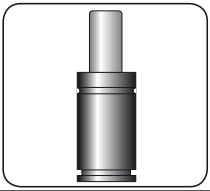

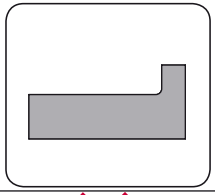

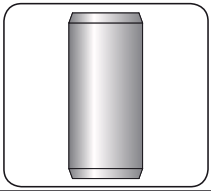

| CODE | | EXS 200 050 | AFC 200 050 | | EEXS-050- Serial Number |
|---|---|---|---|---|---|
| ENG | ORDER | FLANGE STRIPPER | GAS SPRING | CAP | ROD |
| DEU | BESTELL | ABSTREIFER | GASDRUCKFEDER | ADAPTER | KOLBENSTANGE |
| FRA | COMMANDE | EXTRACTEUR | RESSORT À GAZ | LAME D´EXTRACTIEN | TIGE |
| ITA | ORDINE | ESTRATTORE | CILINDRO AD AZOTO | ADATTATORE | STELO |
| ESP | PEDIDO | EXTRACTOR | RESORTE DE GAS | UÑA | EJE |
| POR | PEDIDO | LEVANTADOR | CILINDRO DE GÁS | ADAPTADOR | HASTE |

# EXDB 90

*Stock Lifters*

AZOL GAS

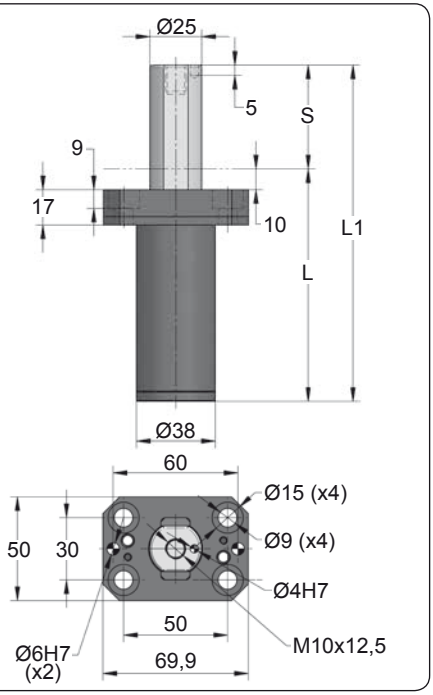


| ORDER | S (mm) | L1 ±0,25 (mm) | L (mm) | Gas Spring | Kg. |
|---|---|---|---|---|---|
| EXDB 90 025 | 25 | 112 | 87 | AFJ 90 025 | 0.63 |
| EXDB 90 038 | 38 | 138 | 100 | AFJ 90 038 | 0.69 |
| EXDB 90 050 | 50 | 162 | 112 | AFJ 90 050 | 0.75 |
| EXDB 90 063 | 63.5 | 192 | 128.5 | AFJ 90 063 | 0.82 |
| EXDB 90 080 | 80 | 225 | 145 | AFJ 90 080 | 0.92 |
| EXDB 90 100 | 100 | 265 | 165 | AFJ 90 100 | 1.02 |
| EXDB 90 125 | 125 | 315 | 190 | AFJ 90 125 | 1.15 |

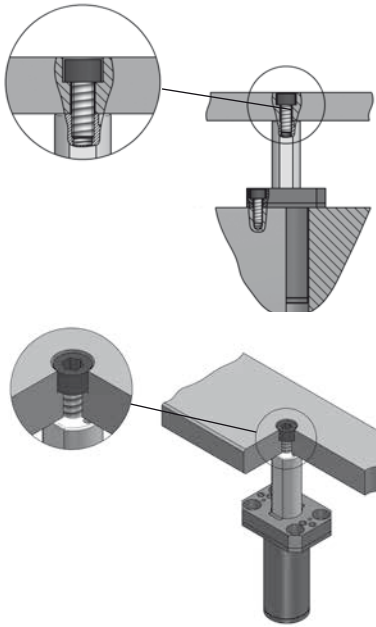

| CODE | bar | psi | $F_0$ daN | $F_1$ daN |
|---|---|---|---|---|
| EXDB 90 050 | 180 | 2610 | 90 | 125 |

| | | |
|---|---|---|
| ENG | ORDER | |
| DEU | BESTELL | |
| FRA | COMMANDE | |
| ITA | ORDINE | |
| ESP | PEDIDO | |
| POR | PEDIDO | |
| | | $F_0$ daN |
| | | S mm |

EXDB 90 050

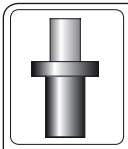

EXDB 90 050

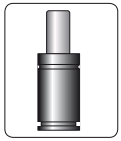

AFJ 90 050

| | | |
|---|---|---|
| ENG | STOCK LIFTER | GAS SPRING |
| DEU | TEILEHEBER | GASDRUCKFEDER |
| FRA | ELEVATEUR | RESSORT À GAZ |
| ITA | SOLLEVATORE | CILINDRO AD AZOTO |
| ESP | ELEVADOR | RESORTE DE GAS |
| POR | LEVANTADOR | CILINDRO DE GÁS |




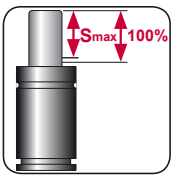


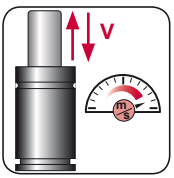


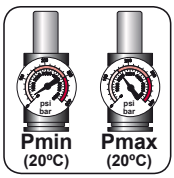


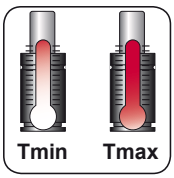


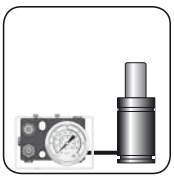

| $N_2$ | Smax < 90% | Vmax 0,8 m/s | bar psi 20 290 | bar psi 150 2175 | ºC ºF 0 32 | ºC ºF 80 176 | |
|---|---|---|---|---|---|---|---|

# AZOL GAS EXDN 90

Stock Lifters

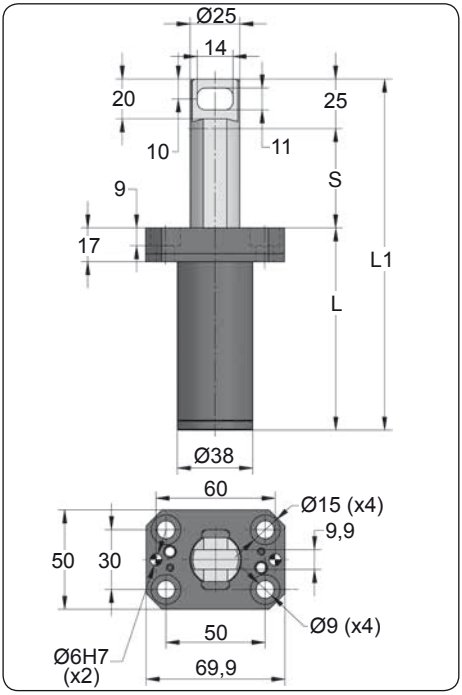


| ORDER | S (mm) | L1 ±0,25 (mm) | L (mm) | Gas Spring | Kg. |
|---|---|---|---|---|---|
| EXDN 90 025 | 25 | 127 | 77 | AFJ 90 025 | 0.64 |
| EXDN 90 038 | 38 | 153 | 90 | AFJ 90 038 | 0.70 |
| EXDN 90 050 | 50 | 177 | 102 | AFJ 90 050 | 0.76 |
| EXDN 90 063 | 63.5 | 207 | 118.5 | AFJ 90 063 | 0.84 |
| EXDN 90 080 | 80 | 240 | 135 | AFJ 90 080 | 0.93 |
| EXDN 90 100 | 100 | 280 | 155 | AFJ 90 100 | 1.03 |
| EXDN 90 125 | 125 | 330 | 180 | AFJ 90 125 | 1.16 |

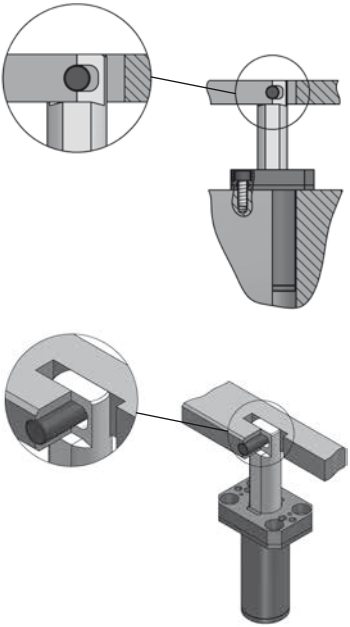

| CODE | bar | psi | $F_0$ daN | $F_1$ daN |
|---|---|---|---|---|
| EXDN 90 050 | 180 | 2610 | 90 | 125 |

| | |
|---|---|
| ENG | ORDER |
| DEU | BESTELL |
| FRA | COMMANDE |
| ITA | ORDINE |
| ESP | PEDIDO |
| POR | PEDIDO |

$F_0$ daN — S mm

EXDN 90 50

EXDN 90 050

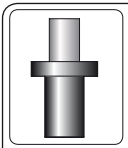

EXDN 90 050



AFJ 90 050

| | | |
|---|---|---|
| ENG | STOCK LIFTER | GAS SPRING |
| DEU | TEILEHEBER | GASDRUCKFEDER |
| FRA | ELEVATEUR | RESSORT À GAZ |
| ITA | SOLLEVATORE | CILINDRO AD AZOTO |
| ESP | ELEVADOR | RESORTE DE GAS |
| POR | LEVANTADOR | CILINDRO DE GÁS |




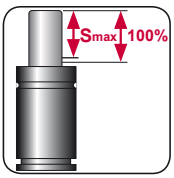


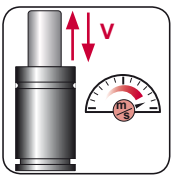


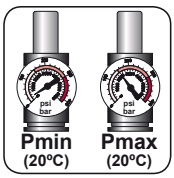


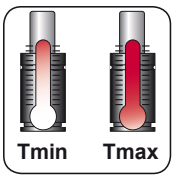




| $N_2$ | Smax < 90% | Vmax 0,8 m/s | bar psi 20 290 | bar psi 150 2175 | °C °F 0 32 | °C °F 80 176 | |
|---|---|---|---|---|---|---|---|

# EXDT 170

*Stock Lifters*

AZOL GAS

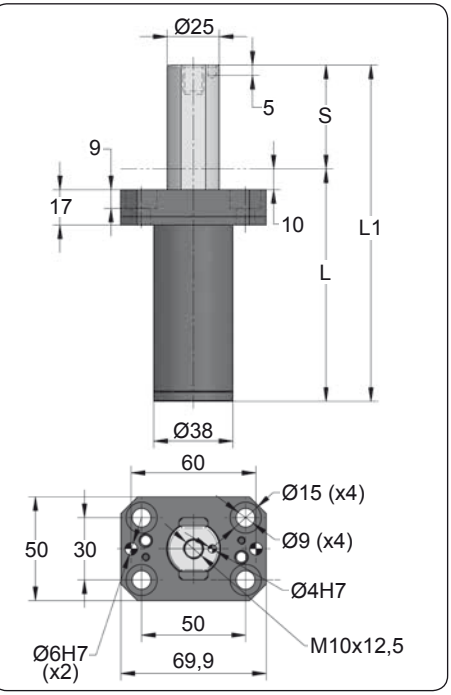


| ORDER | S (mm) | L1 ±0,25 (mm) | L (mm) | Gas Spring | Kg. |
|---|---|---|---|---|---|
| EXDT 170 025 | 25 | 112 | 87 | CW 170 025 | 0.61 |
| EXDT 170 038 | 38 | 138 | 100 | CW 170 038 | 0.68 |
| EXDT 170 050 | 50 | 162 | 112 | CW 170 050 | 0.75 |
| EXDT 170 063 | 63 | 188 | 125 | CW 170 063 | 0.83 |
| EXDT 170 080 | 80 | 225 | 145 | CW 170 080 | 0.94 |
| EXDT 170 100 | 100 | 265 | 165 | CW 170 100 | 1.05 |
| EXDT 170 125 | 125 | 315 | 190 | CW 170 125 | 1.19 |

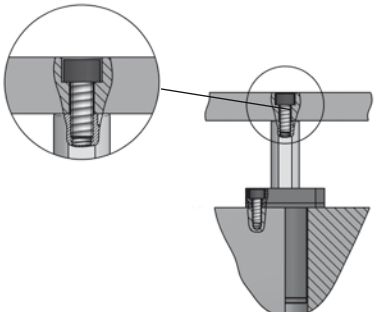

| CODE | bar | psi | $F_0$ daN | $F_1$ daN |
|---|---|---|---|---|
| EXDT 170 050 | 180 | 2610 | 170 | 340 |

| | | |
|---|---|---|
| ENG | ORDER | |
| DEU | BESTELL | |
| FRA | COMMANDE | |
| ITA | ORDINE | |
| ESP | PEDIDO | |
| POR | PEDIDO | |

$F_0$ daN — S mm

EXDT 170 50

EXDT 170 050

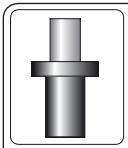

EXDT 170 050

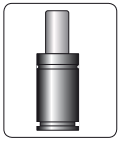

CW 170 050

| | | |
|---|---|---|
| ENG | STOCK LIFTER | GAS SPRING |
| DEU | TEILEHEBER | GASDRUCKFEDER |
| FRA | ELEVATEUR | RESSORT À GAZ |
| ITA | SOLLEVATORE | CILINDRO AD AZOTO |
| ESP | ELEVADOR | RESORTE DE GAS |
| POR | LEVANTADOR | CILINDRO DE GÁS |




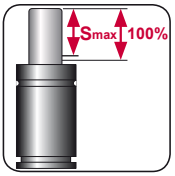


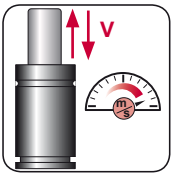


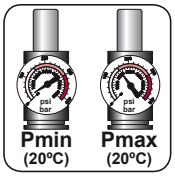


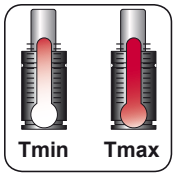




| $N_2$ | Smax < 90% | Vmax 0,8 m/s | bar psi 20 290 | bar psi 150 2175 | ºC ºF 0 32 | ºC ºF 80 176 | |
|---|---|---|---|---|---|---|---|

# AZOL GAS EXDE 170

Stock Lifters

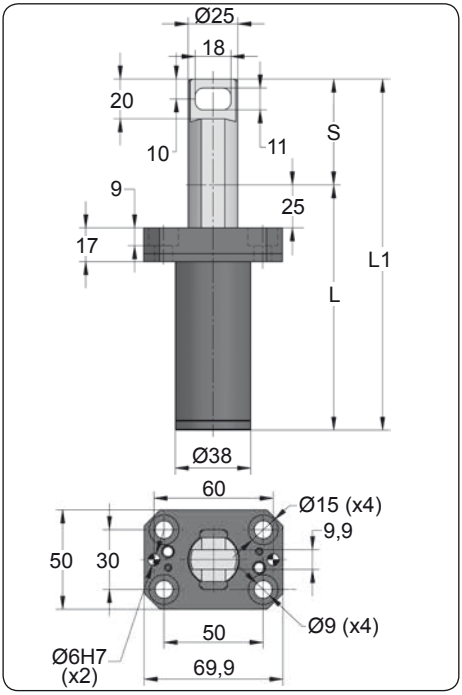


| ORDER | S (mm) | L1 ±0,25 (mm) | L (mm) | Gas Spring | Kg. |
|---|---|---|---|---|---|
| EXDE 170 025 | 25 | 127 | 102 | CW 170 025 | 0.62 |
| EXDE 170 038 | 38 | 153 | 115 | CW 170 038 | 0.69 |
| EXDE 170 050 | 50 | 177 | 127 | CW 170 050 | 0.76 |
| EXDE 170 063 | 63 | 203 | 140 | CW 170 063 | 0.84 |
| EXDE 170 080 | 80 | 240 | 160 | CW 170 080 | 0.95 |
| EXDE 170 100 | 100 | 280 | 180 | CW 170 100 | 1.06 |
| EXDE 170 125 | 125 | 330 | 205 | CW 170 125 | 1.20 |

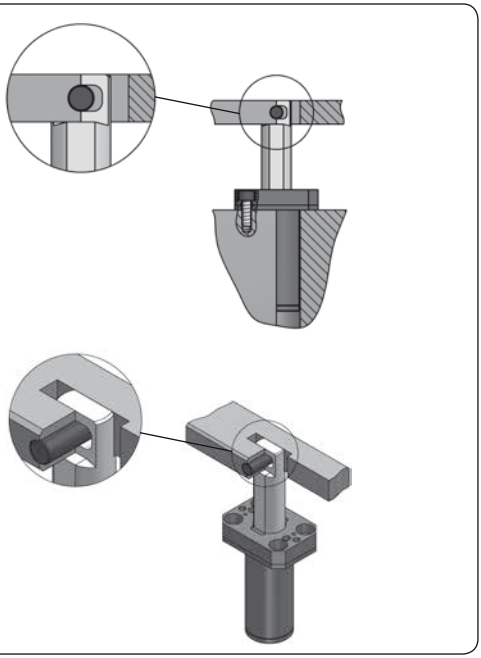

| CODE | bar | psi | $F_0$ daN | $F_1$ daN |
|---|---|---|---|---|
| EXDE 170 050 | 180 | 2610 | 170 | 340 |

| | |
|---|---|
| ENG | ORDER |
| DEU | BESTELL |
| FRA | COMMANDE |
| ITA | ORDINE |
| ESP | PEDIDO |
| POR | PEDIDO |

$F_0$ daN — S mm

EXDE 170 50

EXDE 170 050

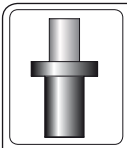

EXDE 170 050

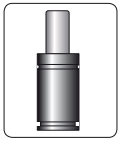

CW 170 050

| | | |
|---|---|---|
| ENG | STOCK LIFTER | GAS SPRING |
| DEU | TEILEHEBER | GASDRUCKFEDER |
| FRA | ELEVATEUR | RESSORT À GAZ |
| ITA | SOLLEVATORE | CILINDRO AD AZOTO |
| ESP | ELEVADOR | RESORTE DE GAS |
| POR | LEVANTADOR | CILINDRO DE GÁS |




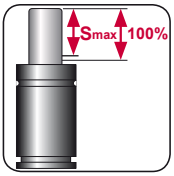


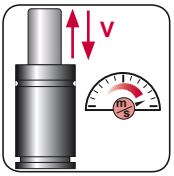


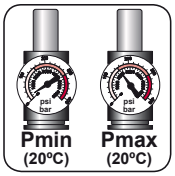


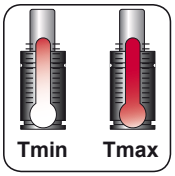




| $N_2$ | Smax < 90% | Vmax 0,8 m/s | bar psi 20 290 | bar psi 150 2175 | °C °F 0 32 | °C °F 80 176 | |
|---|---|---|---|---|---|---|---|

# PME / PGE

*Bolt*

AZOL GAS

## PME

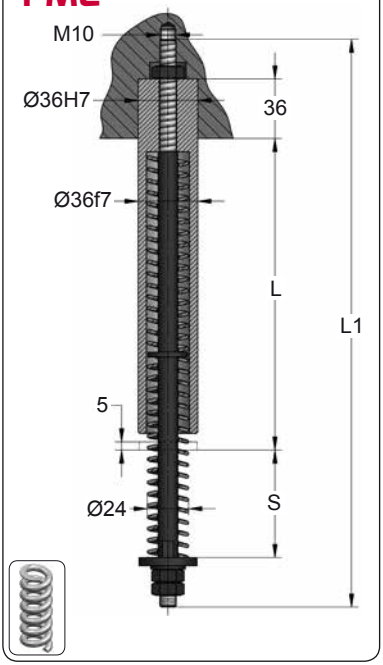


| ORDER | S (mm) | L1 (mm) | L (mm) | $F_0$ (N) | $F_1$ (N) |
|---|---|---|---|---|---|
| PME - 1 | 50 | 290 | 155 | 117.2 | 650 |
| PME - 2 | 50 | 290 | 155 | 185 | 1030 |
| PME - 3 | 65 | 343.5 | 193.5 | 94 | 650 |
| PME - 4 | 65 | 343.5 | 193.5 | 149 | 1030 |
| PME - 5 | 80 | 392.5 | 227.5 | 84.7 | 650 |
| PME - 6 | 80 | 392.5 | 227.5 | 134 | 1030 |



| | |
|---|---|
| ENG | ORDER |
| DEU | BESTELL |
| FRA | COMMANDE |
| ITA | ORDINE |
| ESP | PEDIDO |
| POR | PEDIDO |

PME 1

PME 1

## PGE

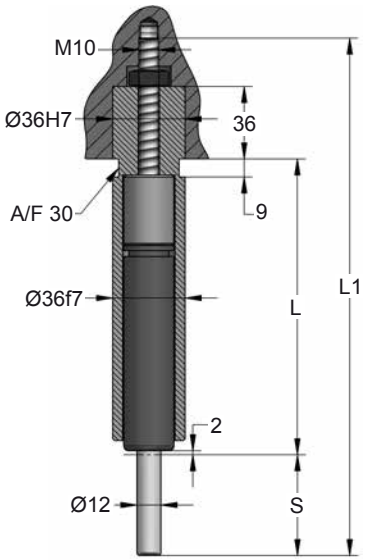


| ORDER | S (mm) | L1 (mm) | L (mm) | $F_0$ (daN) | $F_1$ (daN) | Gas Spring |
|---|---|---|---|---|---|---|
| PGE - 1 | 50 | 257 | 147 | 50 | 65 | AF 50 050 |
| PGE - 2 | 50 | 257 | 147 | 100 | 125 | AF 100 050 |
| PGE - 3 | 65 | 310.5 | 185.5 | 50 | 65 | AF 50 065 |
| PGE - 4 | 65 | 310.5 | 185.5 | 100 | 125 | AF 100 065 |
| PGE - 5 | 80 | 359.5 | 218.5 | 50 | 65 | AF 50 080 |
| PGE - 6 | 80 | 359.5 | 218.5 | 100 | 125 | AF 100 080 |



| | |
|---|---|
| ENG | ORDER |
| DEU | BESTELL |
| FRA | COMMANDE |
| ITA | ORDINE |
| ESP | PEDIDO |
| POR | PEDIDO |

PGE 1

PGE 1

AZOL GAS

# PGN / PGH

*Bolt*

## PGN

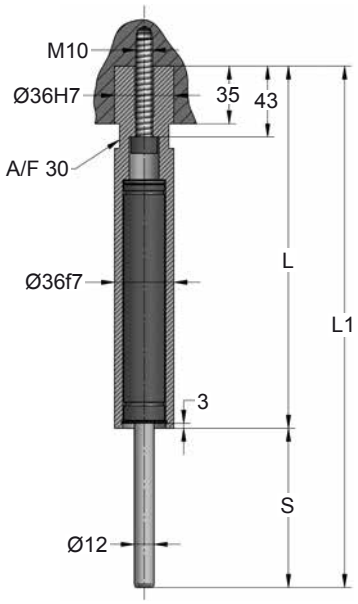


| ORDER | S (mm) | L1 (mm) | L (mm) | $F_0$ (daN) | $F_1$ (daN) | Gas Spring |
|---|---|---|---|---|---|---|
| PGN - 1 | 58 | 240 | 182 | 100 | 155 | AFC 100 063 |
| PGN - 2 | 74 | 274 | 200 | 100 | 155 | AFC 100 080 |
| PGN - 3 | 94 | 314 | 220 | 100 | 155 | AFC 100 100 |

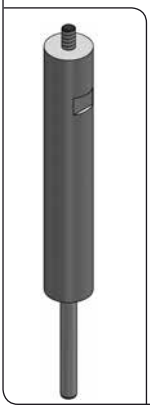

| | |
|---|---|
| ENG | ORDER |
| DEU | BESTELL |
| FRA | COMMANDE |
| ITA | ORDINE |
| ESP | PEDIDO |
| POR | PEDIDO |

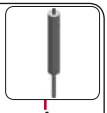

PGN 1

PGN 1

## PGH

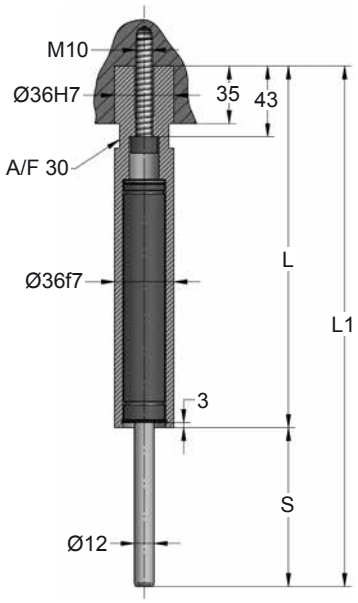


| ORDER | S (mm) | L1 (mm) | L (mm) | $F_0$ (daN) | $F_1$ (daN) | Gas Spring |
|---|---|---|---|---|---|---|
| PGH - 1 | 58 | 240 | 182 | 100 | 155 | AFC 100 063 |
| PGH - 2 | 74 | 274 | 200 | 100 | 155 | AFC 100 080 |
| PGH - 3 | 94 | 314 | 220 | 100 | 155 | AFC 100 100 |



| | |
|---|---|
| ENG | ORDER |
| DEU | BESTELL |
| FRA | COMMANDE |
| ITA | ORDINE |
| ESP | PEDIDO |
| POR | PEDIDO |

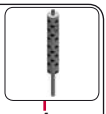

PGH 1

PGH 1

AZOL GAS

# SP-ER AIR SCRAP REMOVER

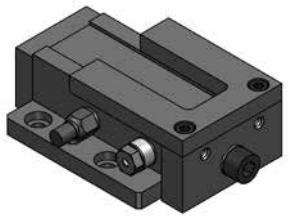

SP-ER 3

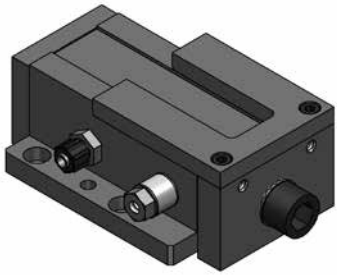

SP-ER 5

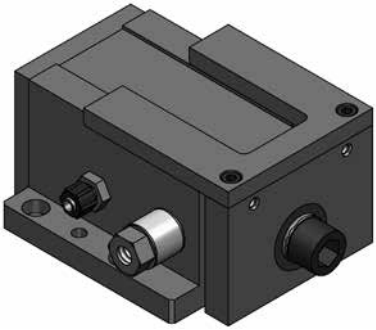

SP-ER 7

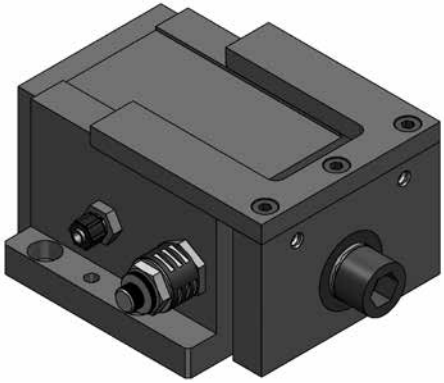

SP-ER 9

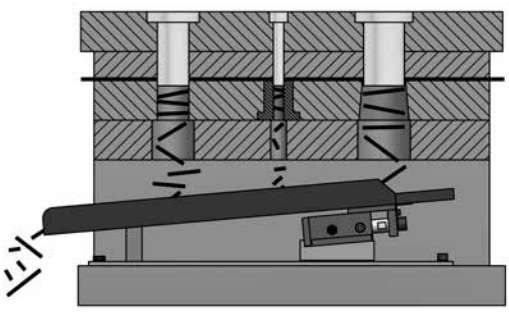

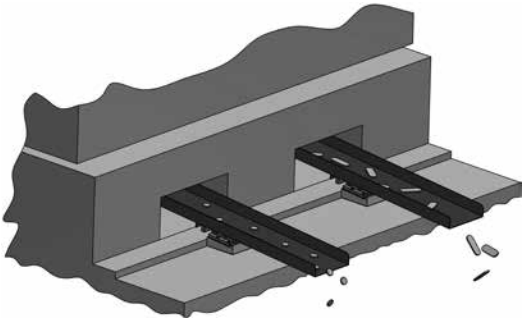

# SP-ER 3

*Air Scrap Remover*

AZOL GAS

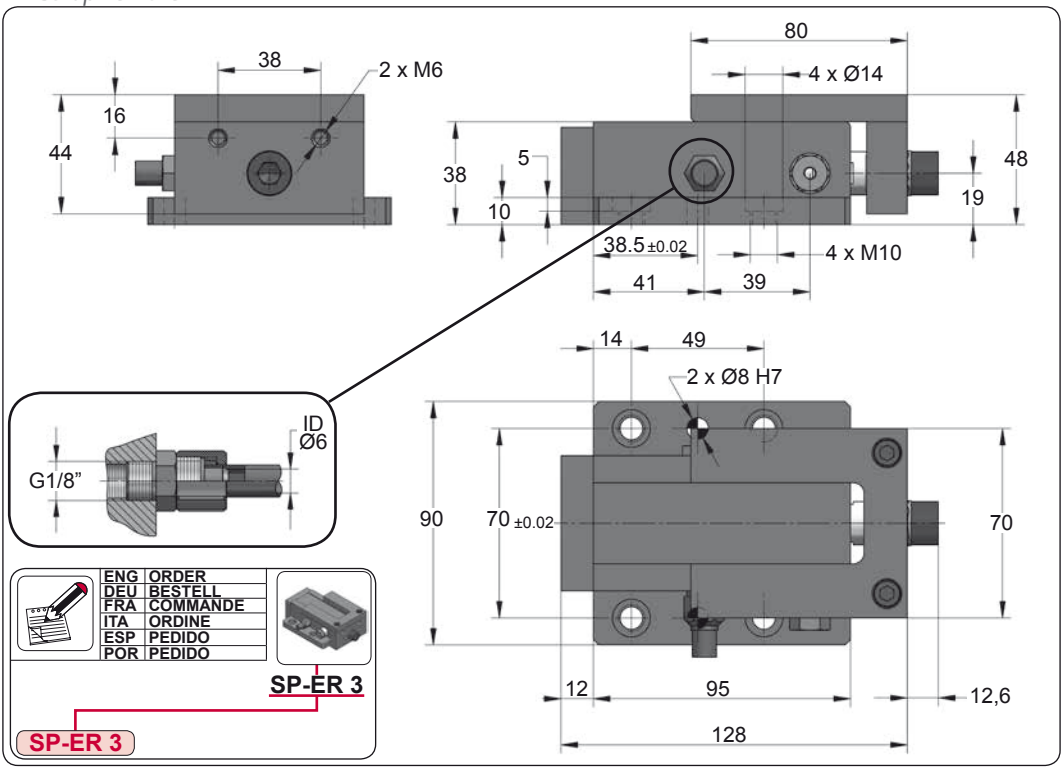


| | |
|---|---|
| ENG | ORDER |
| DEU | BESTELL |
| FRA | COMMANDE |
| ITA | ORDINE |
| ESP | PEDIDO |
| POR | PEDIDO |

SP-ER 3

SP-ER 3

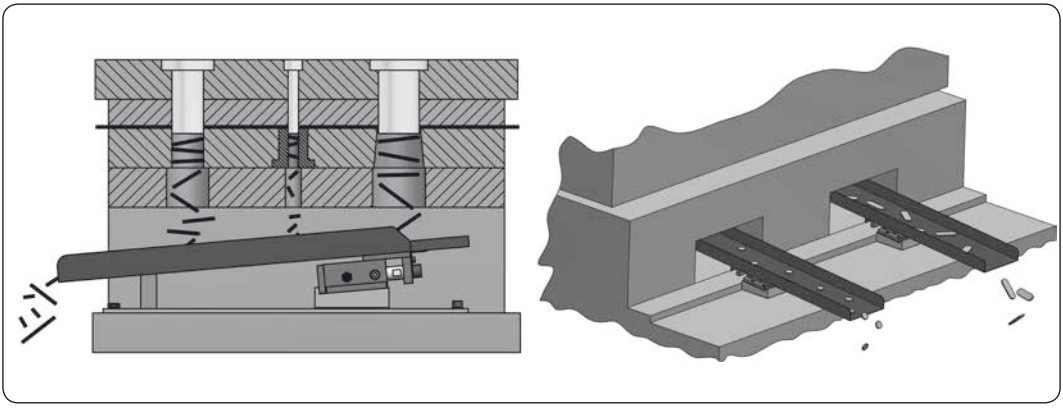

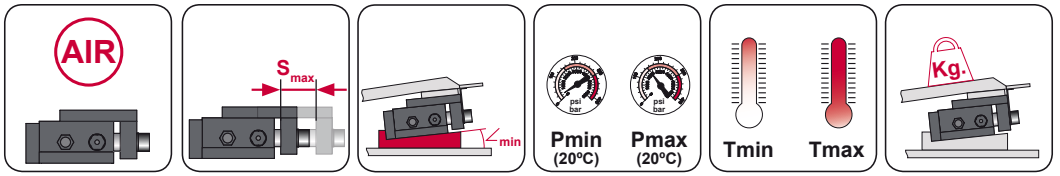


| AIR | Smax = 30 mm | ∠ min = 6º | bar psi 4 58 | bar psi 6 87 | ºC ºF 0 32 | ºC ºF 60 140 | Kg.max = 6 Kg. |
|---|---|---|---|---|---|---|---|

AZOL GAS

# SP-ER 5

*Air Scrap Remover*

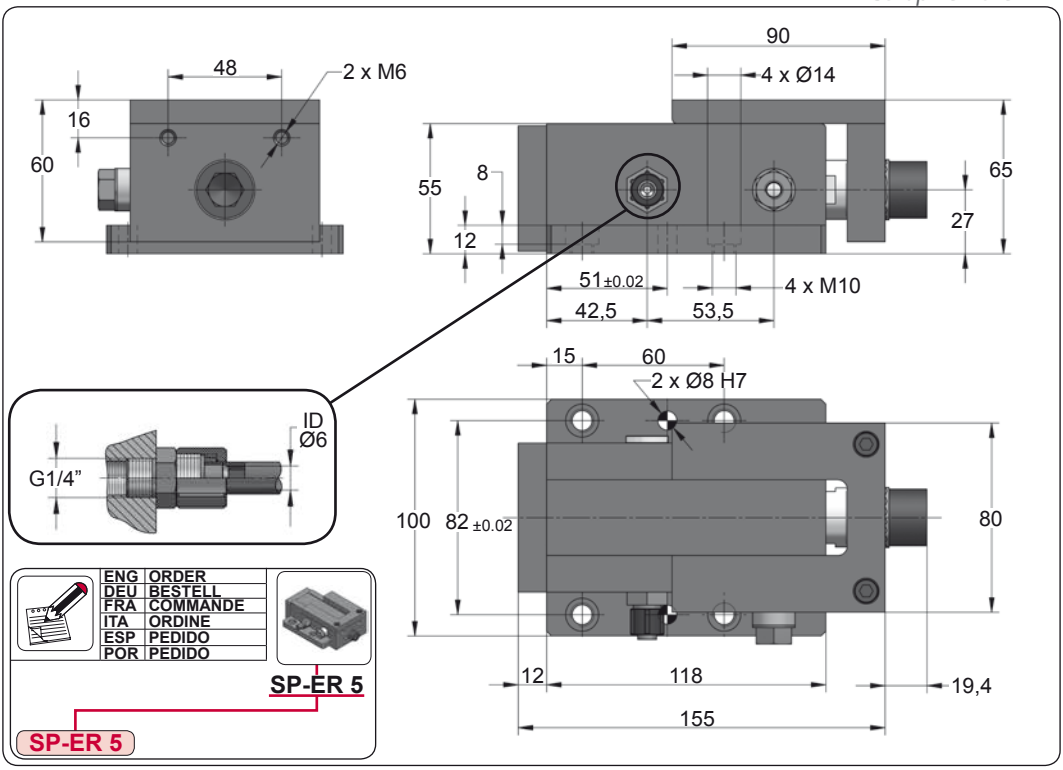


| | |
|---|---|
| ENG | ORDER |
| DEU | BESTELL |
| FRA | COMMANDE |
| ITA | ORDINE |
| ESP | PEDIDO |
| POR | PEDIDO |

SP-ER 5

SP-ER 5

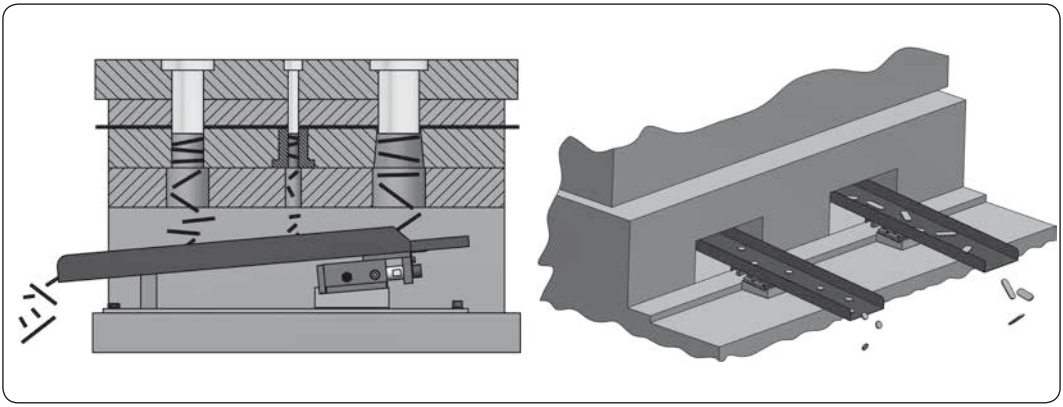

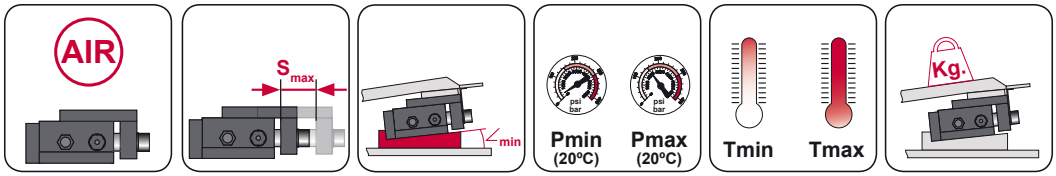


| AIR | Smax = 33 mm | ∠ min = 6º | bar 4 | psi 58 | bar 6 | psi 87 | ºC 0 | ºF 32 | ºC 60 | ºF 140 | Kg.max = 14 Kg. |
|---|---|---|---|---|---|---|---|---|---|---|---|

# SP-ER 7

*Air Scrap Remover*

AZOL GAS

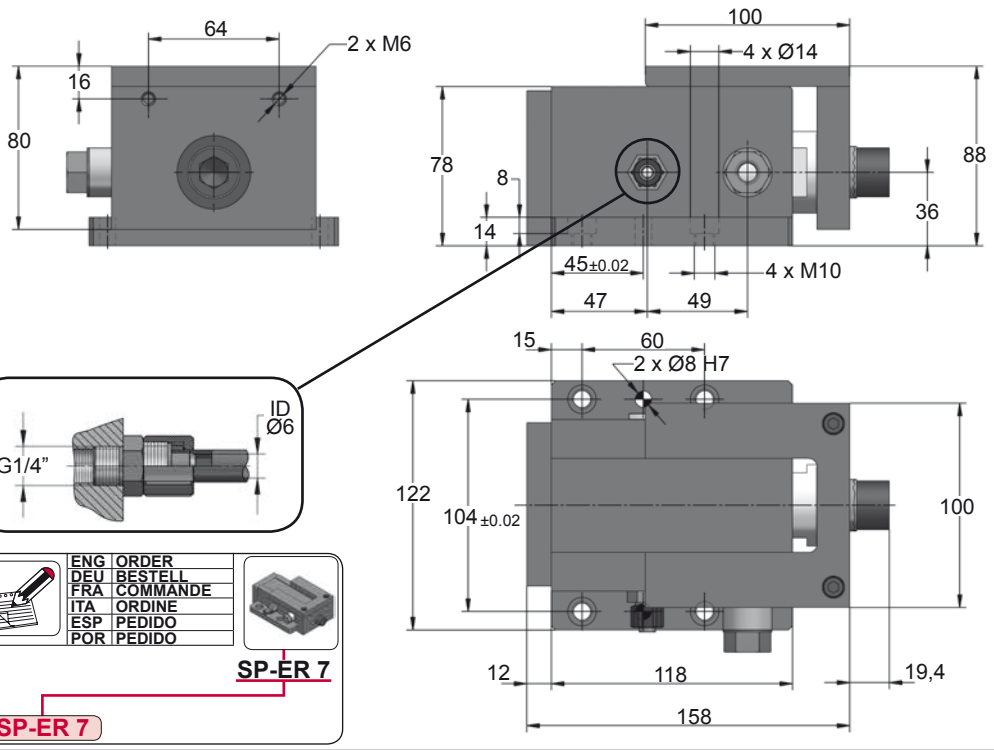


| | |
|---|---|
| ENG | ORDER |
| DEU | BESTELL |
| FRA | COMMANDE |
| ITA | ORDINE |
| ESP | PEDIDO |
| POR | PEDIDO |

SP-ER 7

SP-ER 7

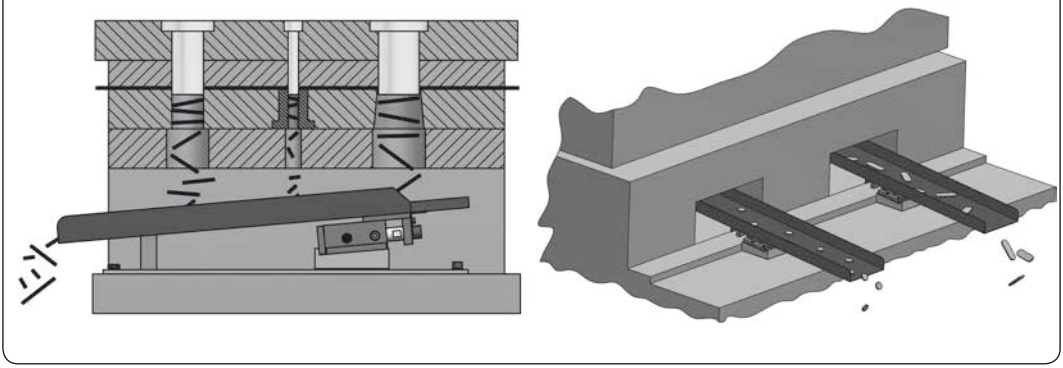

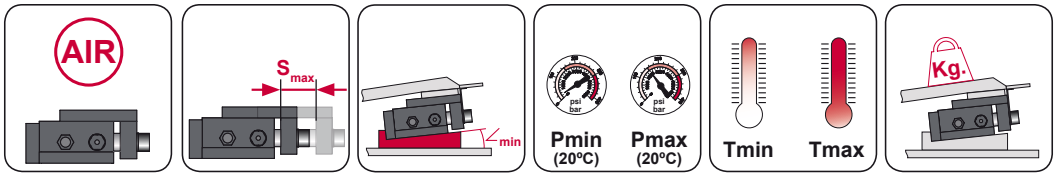


| AIR | Smax = 20 mm | ∠ min = 6º | bar psi 4 58 | bar psi 6 87 | ºC ºF 0 32 | ºC ºF 60 140 | Kg.max = 36 Kg. |
|---|---|---|---|---|---|---|---|

AZOL GAS

# SP-ER 9

*Air Scrap Remover*

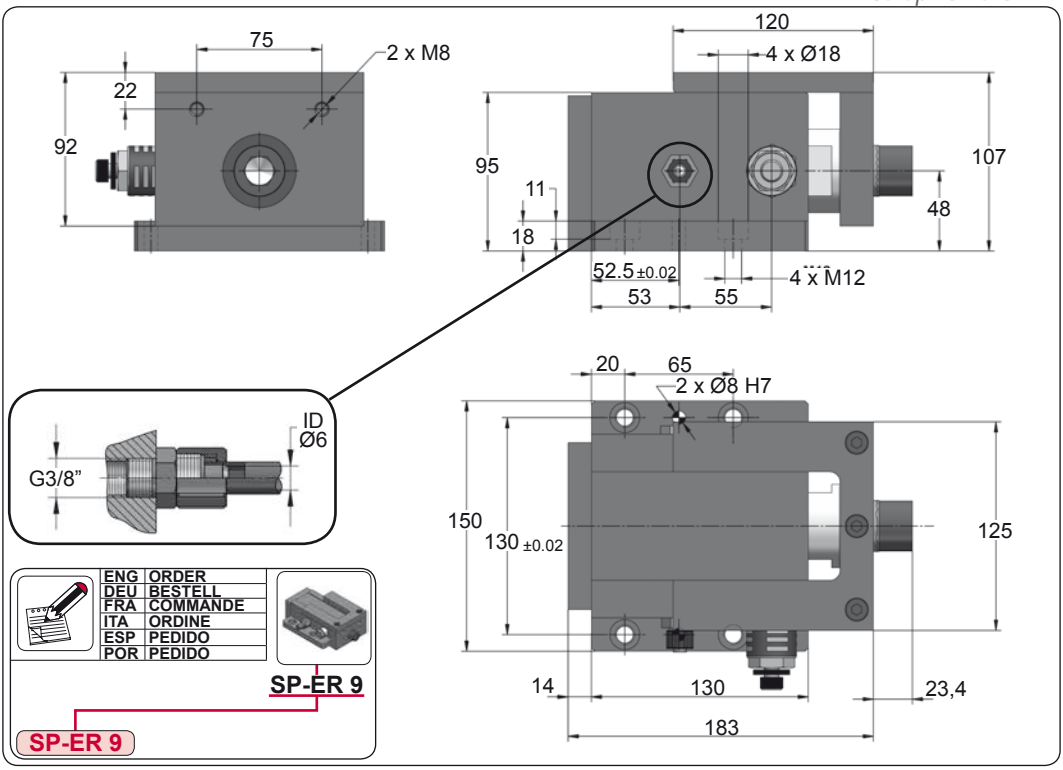


| | |
|---|---|
| ENG | ORDER |
| DEU | BESTELL |
| FRA | COMMANDE |
| ITA | ORDINE |
| ESP | PEDIDO |
| POR | PEDIDO |

SP-ER 9

SP-ER 9

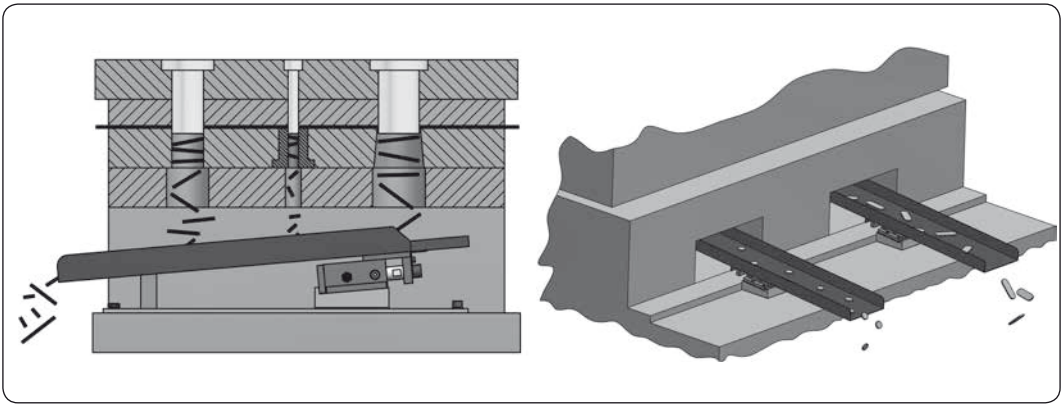

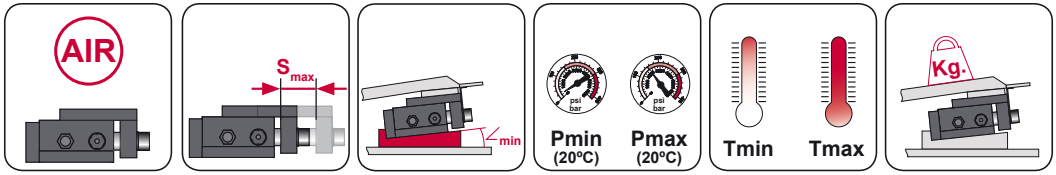


| AIR | Smax = 28 mm | ∠ min = 6º | bar psi 4 58 | bar psi 6 87 | ºC ºF 0 32 | ºC ºF 60 140 | Kg.max = 56 Kg. |
|---|---|---|---|---|---|---|---|

AZOL GAS

# ACCESSORIES

## G1/8”

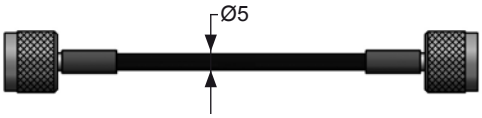


Charge Port G1/8” CNN
Pmax 630 bar
Rmin 20 mm
Tmax 100 ºC

-High vibration applications.
-Compact size.

## M8 x 1

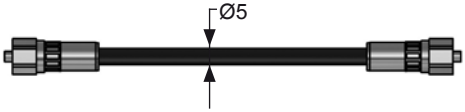


Charge Port M6 CNN
Pmax 400 bar
Rmin 20 mm
Tmax 100 ºC

-M6 charge port gas springs.
-Compact size.

## M12 X 1,5

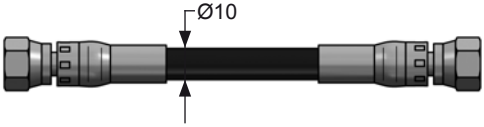


Charge Port G1/8” CNN
Pmax 345 bar
Rmin 40 mm
Tmax 100 ºC

-Larger gas springs.
-High gas flow.

## 7/16”

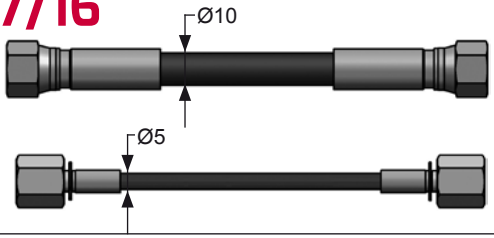


Charge Port G1/8” CNN
Pmax 345 bar
Rmin 40 mm
Tmax 100 ºC

Charge Port G1/8” CNN
Pmax 345 bar
Rmin 20 mm
Tmax 100 ºC

-Standard applications.

## 9/16”

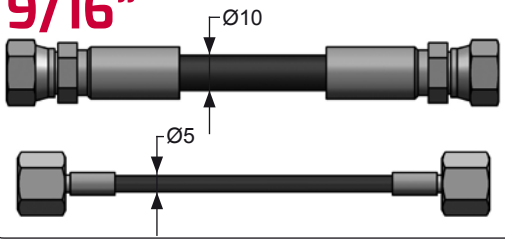


Charge Port G1/8” CNN
Pmax 345 bar
Rmin 40 mm
Tmax 100 ºC

Charge Port G1/8” CNN
Pmax 345 bar
Rmin 20 mm
Tmax 100 ºC

-High vibration applications.

# CONNECTION SYSTEMS

AZOL GAS

## EXAMPLE 1

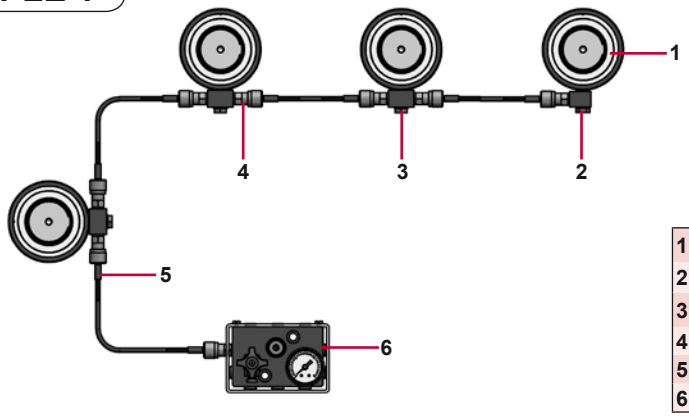


| | |
|---|---|
| 1.- | AG (x4) |
| 2.- | CF 01 24 (x1) |
| 3.- | CF 02 40 (x3) |
| 4.- | SKK 12R 1/8 (x8) |
| 5.- | SGS 12 XXXX (x4) |
| 6.- | 600-CP (x1) |

## EXAMPLE 2

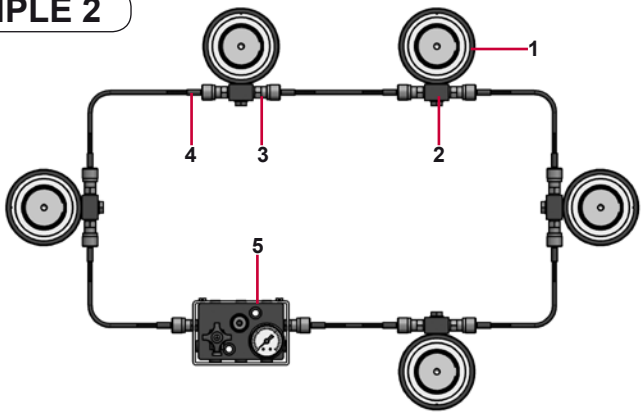


| | |
|---|---|
| 1.- | AG (x5) |
| 2.- | CF 02 (x5) |
| 3.- | SKK 12R 1/8 (x12) |
| 4.- | SGS 12 XXXX (x6) |
| 5.- | 600-CP (x1) |

## EXAMPLE 3

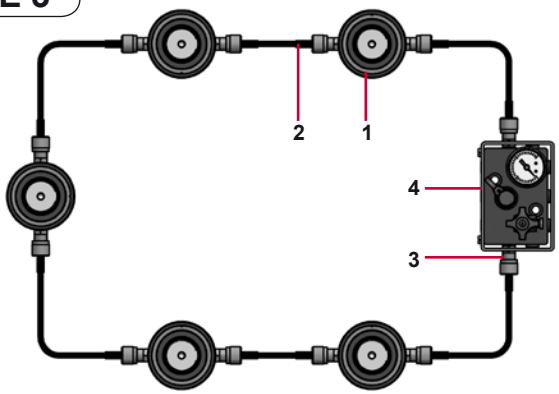


| | |
|---|---|
| 1.- | AGB-H (x5) |
| 2.- | SGS 12 XXXX (x6) |
| 3.- | SKK 12R 1/8 (x12) |
| 4.- | 600-CP (x1) |

AZOL GAS

# CONNECTION SYSTEMS

## EXAMPLE 4

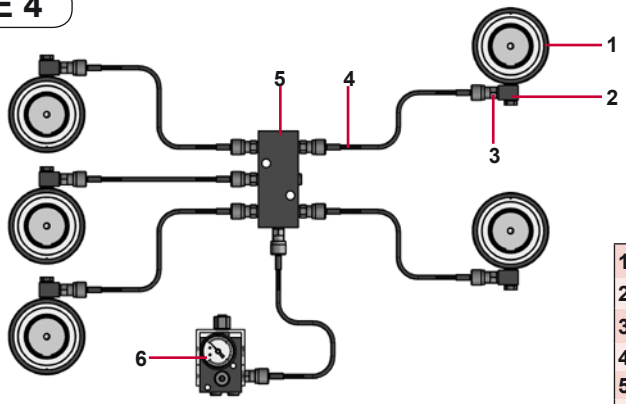


| | |
|---|---|
| 1.- | AG (x5) |
| 2.- | CF 01 24 (x5) |
| 3.- | SKK 12R 1/8 (X12) |
| 4.- | SGS 12 XXXX (x6) |
| 5.- | PLD 6 (x1) |
| 6.- | 600-CPRE 01 (x1) |

## EXAMPLE 5

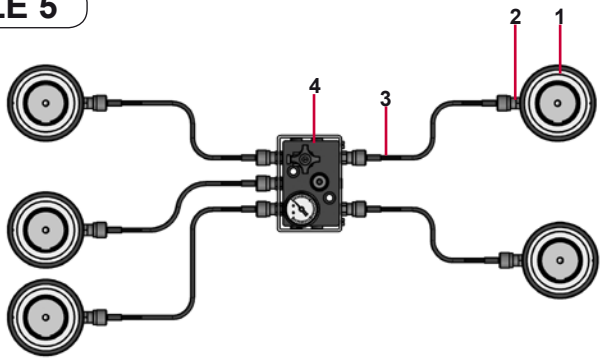


| | |
|---|---|
| 1.- | AG (x5) |
| 2.- | SKK 12R 1/8 (x10) |
| 3.- | SGS 12 XXXX (x5) |
| 4.- | 600-CP (x1) |

## EXAMPLE 6

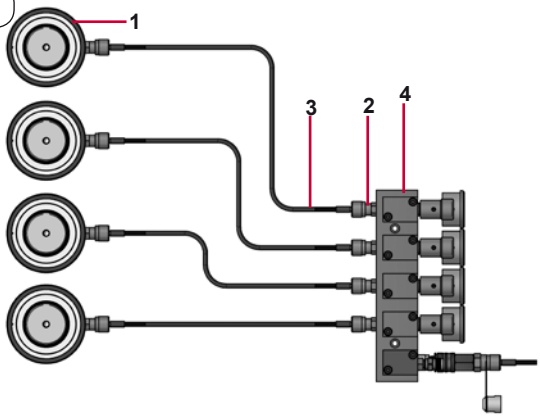


| | |
|---|---|
| 1.- | AG (x4) |
| 2.- | SKK 12R 1/8 (x8) |
| 3.- | SGS 12 XXXX (x4) |
| 4.- | 600-CPMC 01 (x1) |

# HOSE INSTALLATION GUIDELINES

AZOL GAS

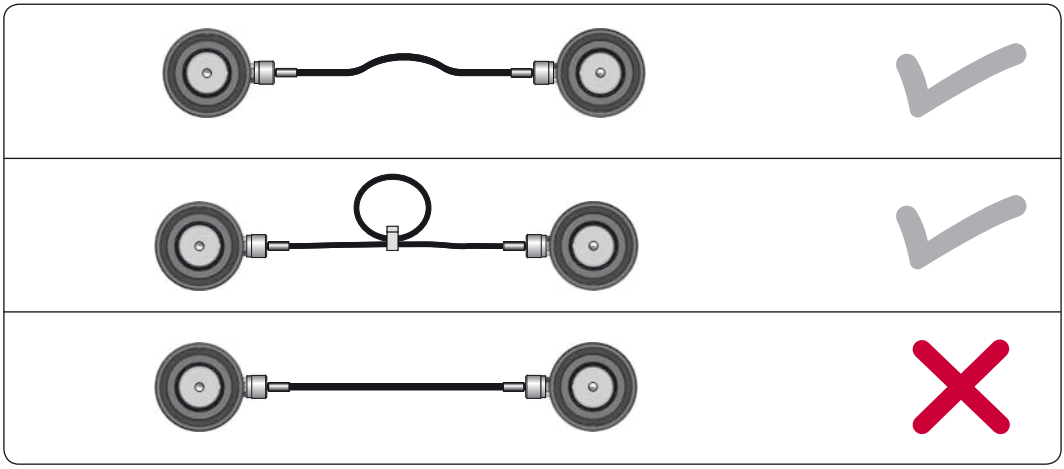

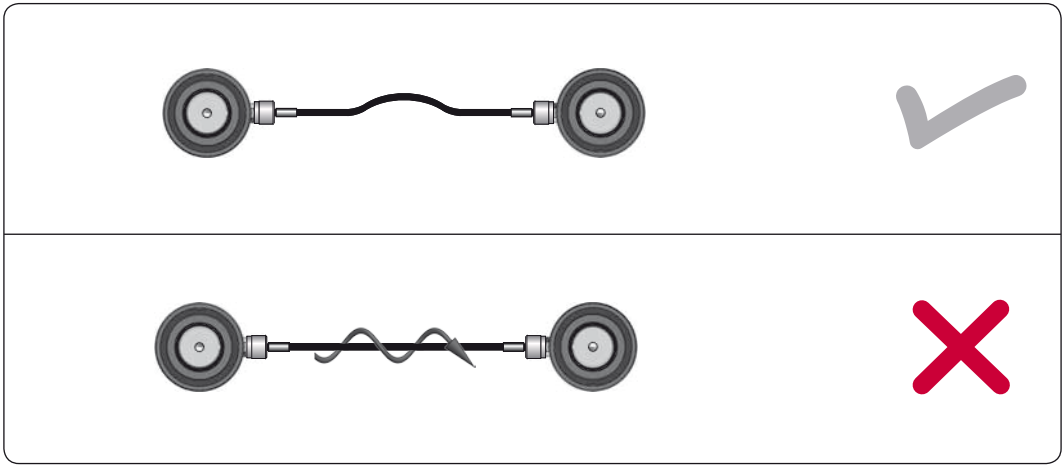

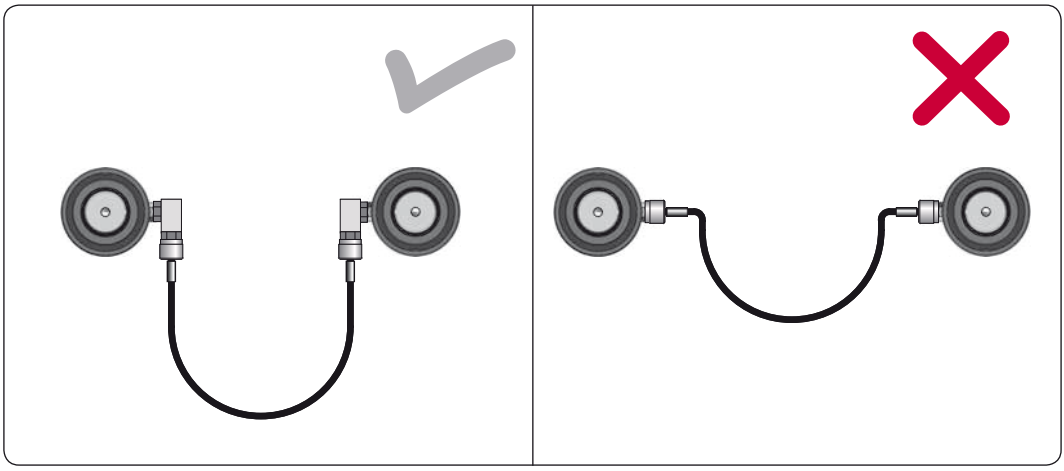

AZOL GAS

# HOSE INSTALLATION GUIDELINES

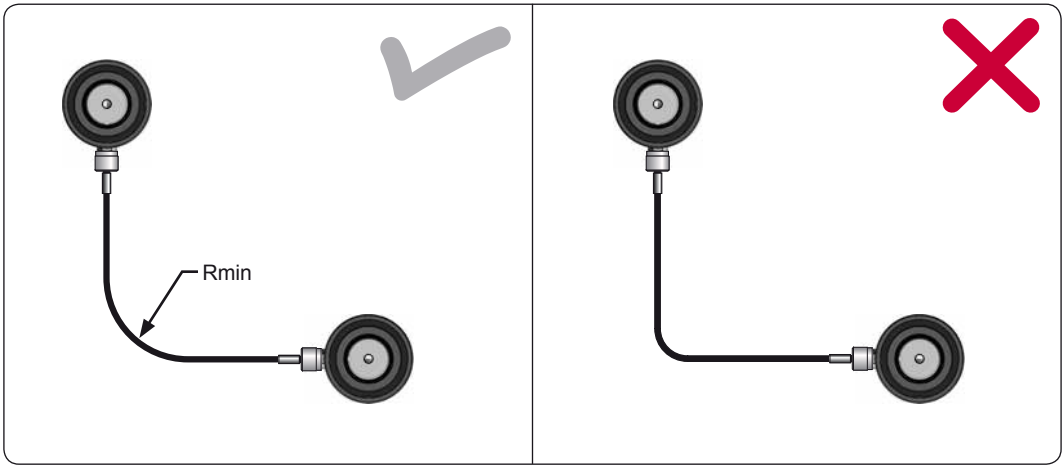


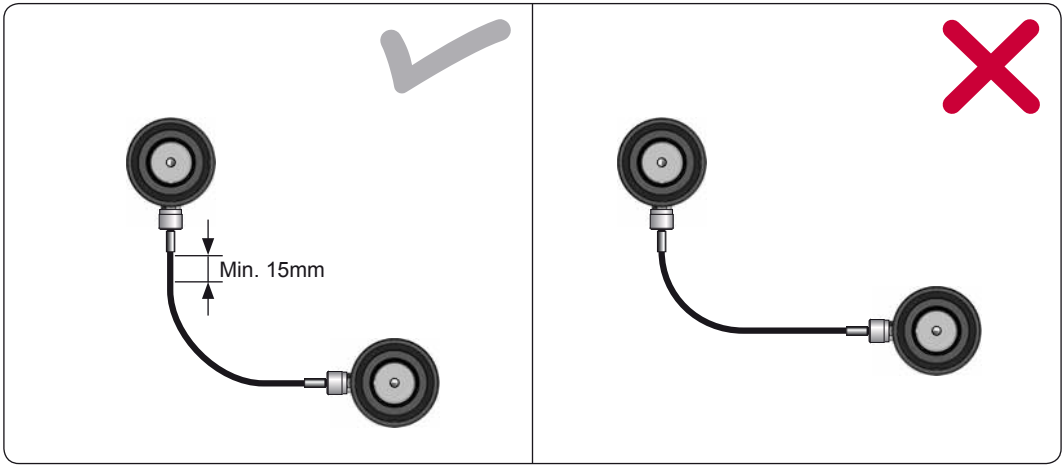


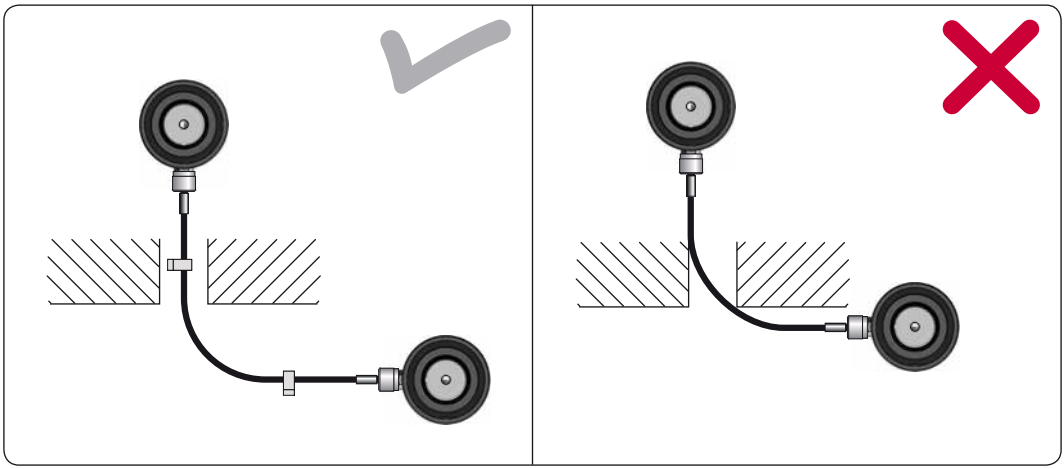

# CONTROL PANELS

*Accessories*

AZOL GAS

## 600-CPLC _ _

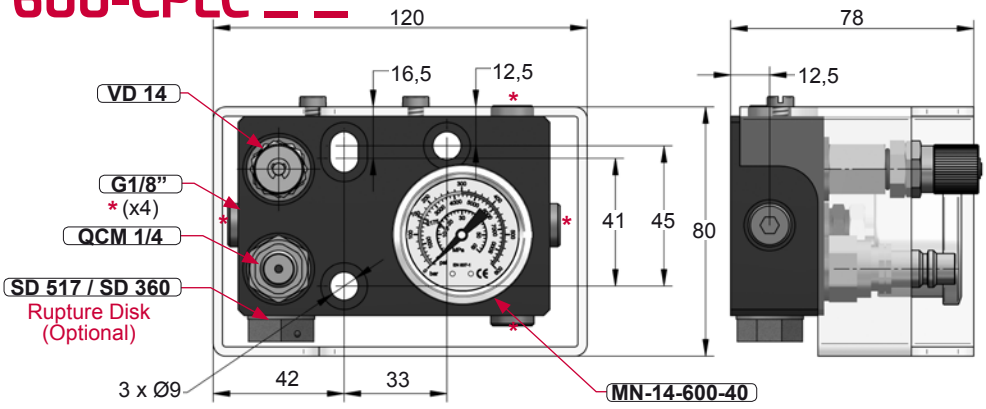





| bar | psi |
|---|---|
| 600 | 8000 |

| bar | psi |
|---|---|
| 517 | 7500 |

| bar | psi |
|---|---|
| 360 | 5220 |

| | |
|---|---|
| ENG | ORDER |
| DEU | BESTELL |
| FRA | COMMANDE |
| ITA | ORDINE |
| ESP | PEDIDO |
| POR | PEDIDO |

SD | SD 517 | SD 360

600-CPLC 01

600-CPLC 02

600-CPLC 03

## 600-CPTO _ _

TOYOTA SMS DHN 3211n

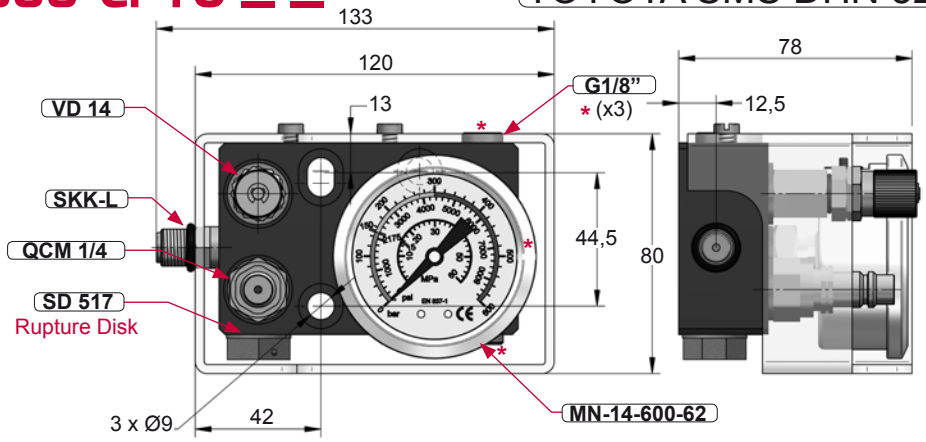








| bar | psi |
|---|---|
| 600 | 8000 |

| bar | psi |
|---|---|
| 517 | 7500 |

| | |
|---|---|
| ENG | ORDER |
| DEU | BESTELL |
| FRA | COMMANDE |
| ITA | ORDINE |
| ESP | PEDIDO |
| POR | PEDIDO |

SD 517 | SD 517

600-CPTO 01

AZOL GAS

# CONTROL PANELS

Accessories

## 600-CPFI _ _

FIAT A0.14.01

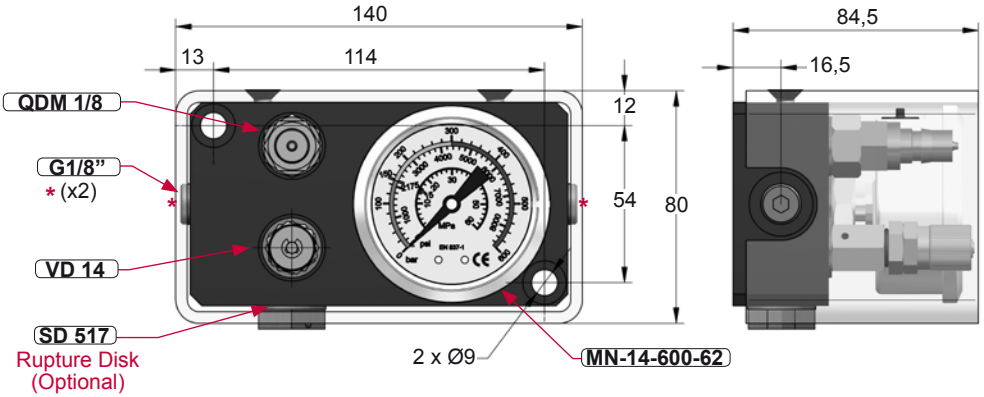





MN-14-600-62

| bar | psi |
|---|---|
| 600 | 8000 |



SD 517

| bar | psi |
|---|---|
| 517 | 7500 |

| | |
|---|---|
| ENG | ORDER |
| DEU | BESTELL |
| FRA | COMMANDE |
| ITA | ORDINE |
| ESP | PEDIDO |
| POR | PEDIDO |

SD 517 SD 517

600-CPFI 01

600-CPFI 02

## 600-CPFO _ _

FORD W-DX-35-72

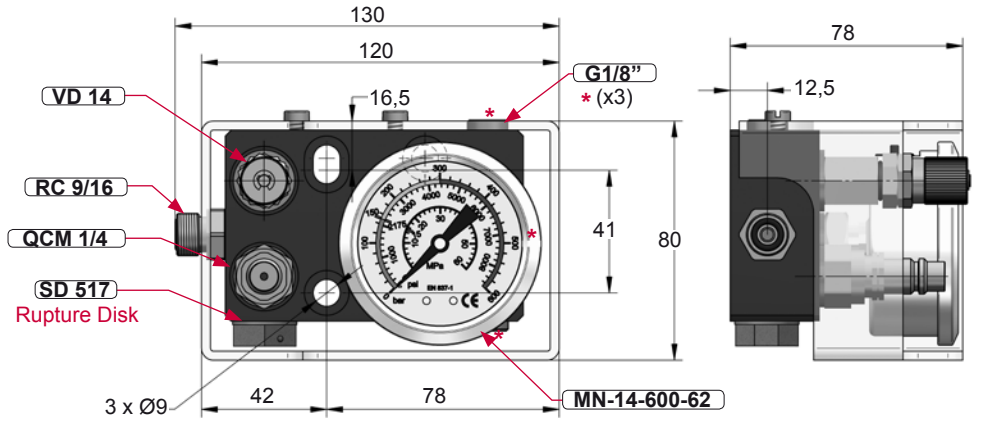





MN-14-600-62

| bar | psi |
|---|---|
| 600 | 8000 |



SD 517

| bar | psi |
|---|---|
| 517 | 7500 |

| | |
|---|---|
| ENG | ORDER |
| DEU | BESTELL |
| FRA | COMMANDE |
| ITA | ORDINE |
| ESP | PEDIDO |
| POR | PEDIDO |

SD 517 SD 517

600-CPFO 01

# CONTROL PANELS

*Accessories*

AZOL GAS

## 600-CPM6 _ _ New!

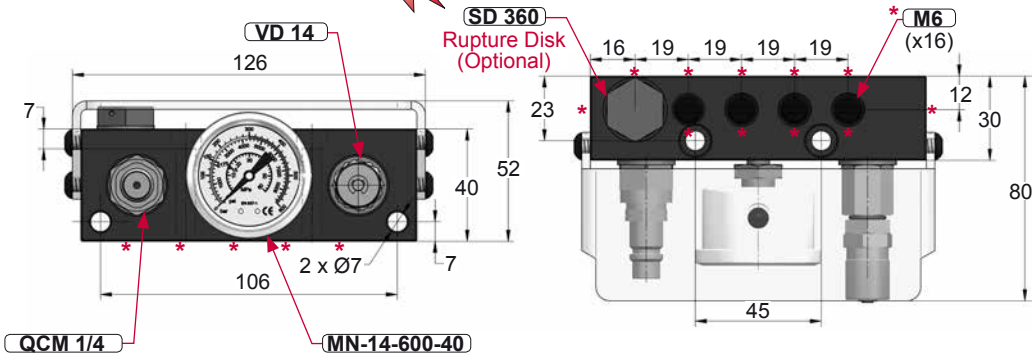


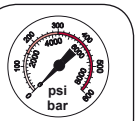


MN-14-600-40

| bar | psi |
|---|---|
| 600 | 8000 |

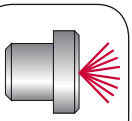

SD 360

| bar | psi |
|---|---|
| 360 | 5220 |

| | |
|---|---|
| ENG | ORDER |
| DEU | BESTELL |
| FRA | COMMANDE |
| ITA | ORDINE |
| ESP | PEDIDO |
| POR | PEDIDO |

SD 360 SD 360

600-CPM6 01

600-CPM6 02

## 600-CPMC4 _ _ New!

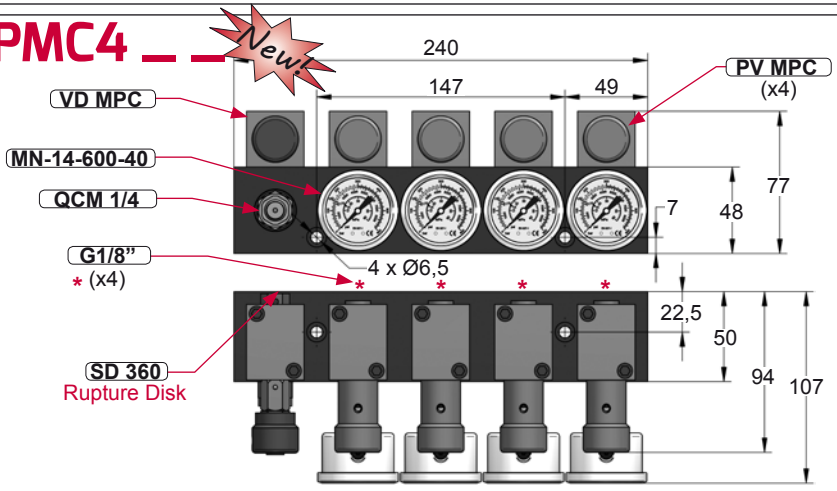


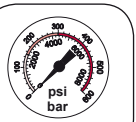


MN-14-600-40

| bar | psi |
|---|---|
| 600 | 8000 |

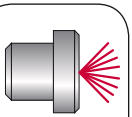

SD 360

| bar | psi |
|---|---|
| 360 | 5220 |

| | |
|---|---|
| ENG | ORDER |
| DEU | BESTELL |
| FRA | COMMANDE |
| ITA | ORDINE |
| ESP | PEDIDO |
| POR | PEDIDO |

SD 360 SD 360

600-CPMC4 01

AZOL GAS

# CONTROL PANELS

*Accessories*

## 600-CPGM _ _

New!

GM 90.25

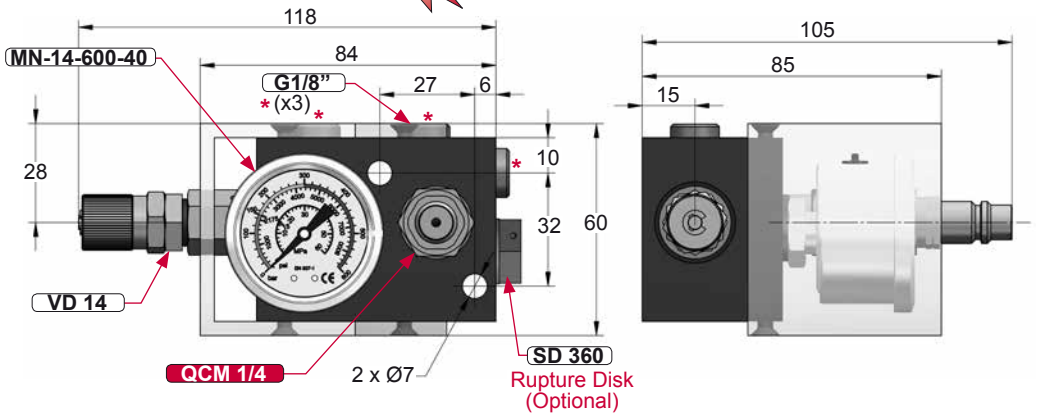





MN-14-600-40

| bar | psi |
|---|---|
| 600 | 8000 |



SD 360

| bar | psi |
|---|---|
| 360 | 5220 |

| | |
|---|---|
| ENG | ORDER |
| DEU | BESTELL |
| FRA | COMMANDE |
| ITA | ORDINE |
| ESP | PEDIDO |
| POR | PEDIDO |







600-CPGM 01

600-CPGM 02

## 600-CPRE _ _

New!

RENAULT EM24.54.700

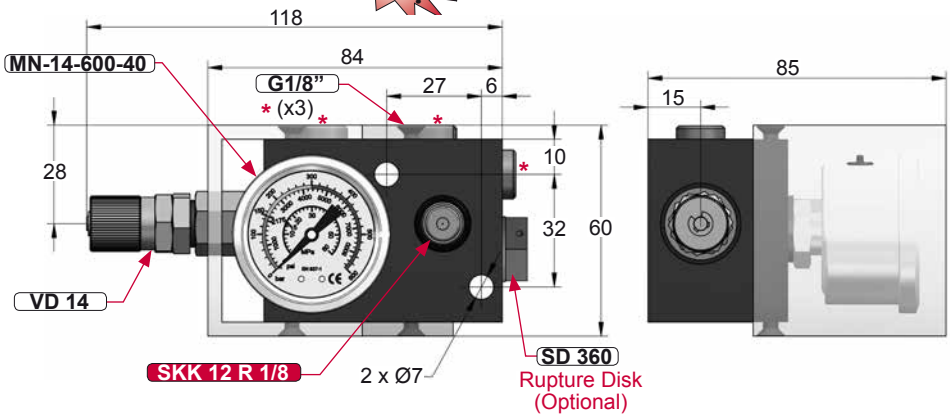





MN-14-600-40

| bar | psi |
|---|---|
| 600 | 8000 |



SD 360

| bar | psi |
|---|---|
| 360 | 5220 |

| | |
|---|---|
| ENG | ORDER |
| DEU | BESTELL |
| FRA | COMMANDE |
| ITA | ORDINE |
| ESP | PEDIDO |
| POR | PEDIDO |







600-CPRE 01

600-CPRE 02

# CONTROL PANELS

*Accessories*

AZOL GAS

## 400-CPAZ _ _

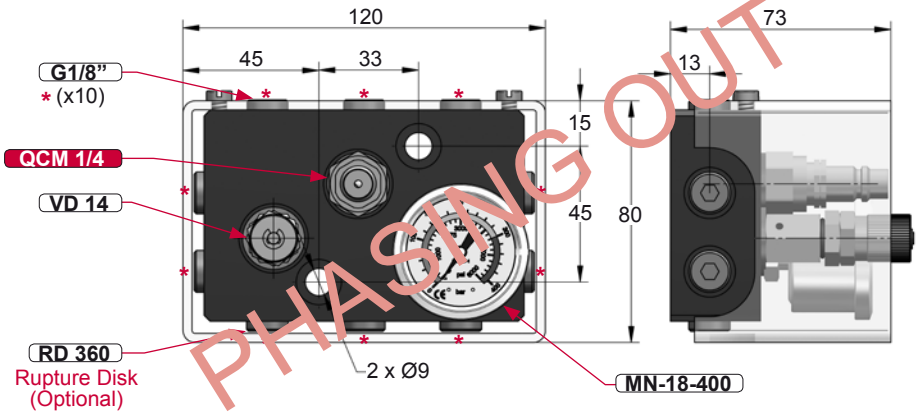





MN-18-400-40

| bar | psi |
|---|---|
| 400 | 6000 |



RD 360

| bar | psi |
|---|---|
| 360 | 5220 |

| | |
|---|---|
| ENG | ORDER |
| DEU | BESTELL |
| FRA | COMMANDE |
| ITA | ORDINE |
| ESP | PEDIDO |
| POR | PEDIDO |

RD 360 RD 360

400-CPAZ 01

400-CPAZ 02

## 400-CPAZ _ _

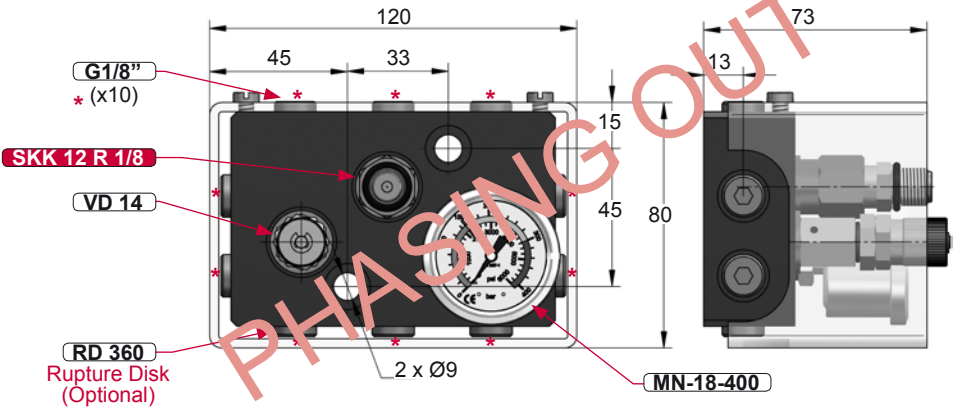





MN-18-400-40

| bar | psi |
|---|---|
| 400 | 6000 |



RD 360

| bar | psi |
|---|---|
| 360 | 5220 |

| | |
|---|---|
| ENG | ORDER |
| DEU | BESTELL |
| FRA | COMMANDE |
| ITA | ORDINE |
| ESP | PEDIDO |
| POR | PEDIDO |

RD 360 RD 360

400-CPAZ 03

400-CPAZ 04

AZOL GAS

# CONTROL PANELS

*Accessories*

## 400-CPLC _ _

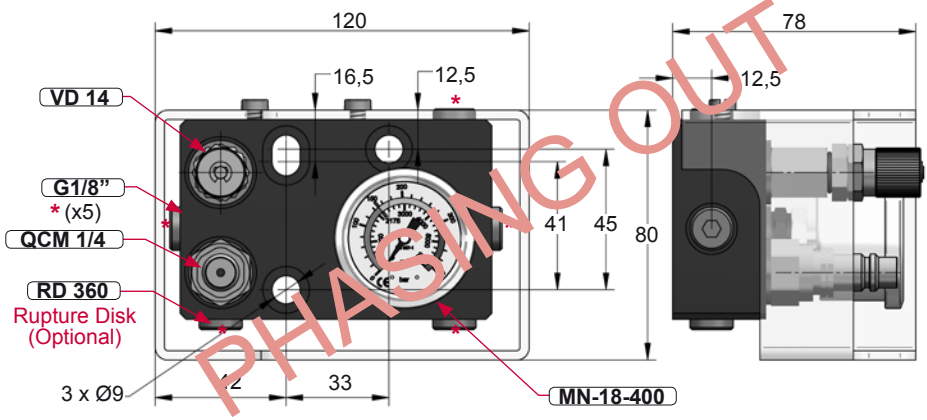


PHASING OUT




MN-18-400-40

| bar | psi |
|---|---|
| 400 | 6000 |



RD 360

| bar | psi |
|---|---|
| 360 | 5220 |

| | |
|---|---|
| ENG | ORDER |
| DEU | BESTELL |
| FRA | COMMANDE |
| ITA | ORDINE |
| ESP | PEDIDO |
| POR | PEDIDO |







400-CPLC 01

400-CPLC 02

## 400-CPM6 _ _

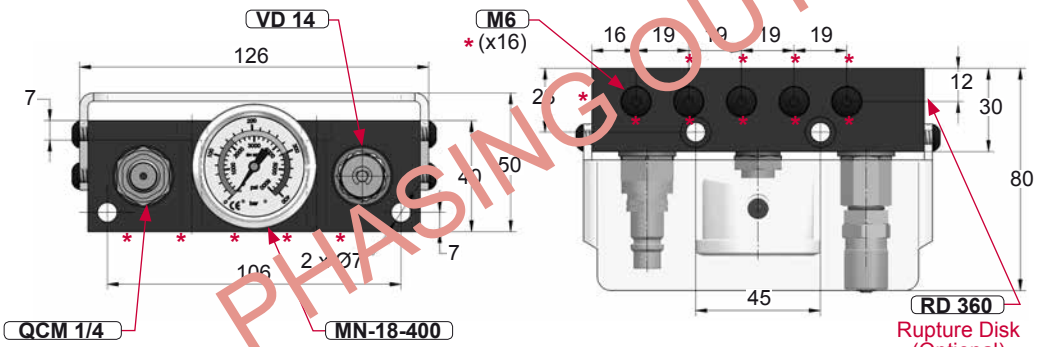


PHASING OUT




MN-18-400-40

| bar | psi |
|---|---|
| 400 | 6000 |



RD 360

| bar | psi |
|---|---|
| 360 | 5220 |

| | |
|---|---|
| ENG | ORDER |
| DEU | BESTELL |
| FRA | COMMANDE |
| ITA | ORDINE |
| ESP | PEDIDO |
| POR | PEDIDO |







400-CPM6 01

400-CPM6 02

# CONTROL PANELS

*Accessories*

AZOL GAS

## QCM 1/4

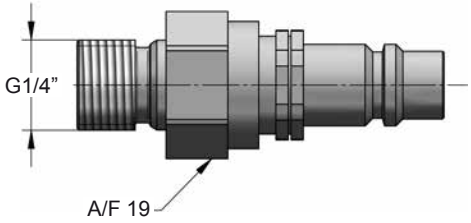


## QCF 1/4

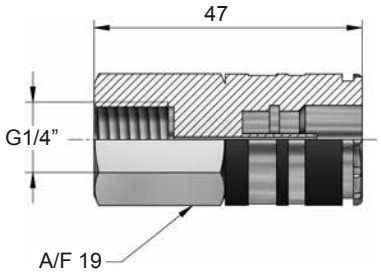


## QDM 1/8

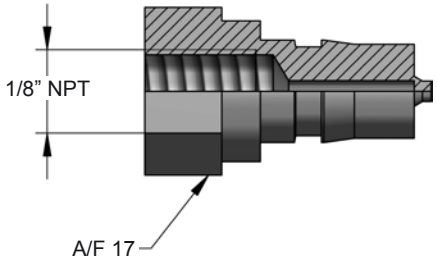


## QDF 1/8

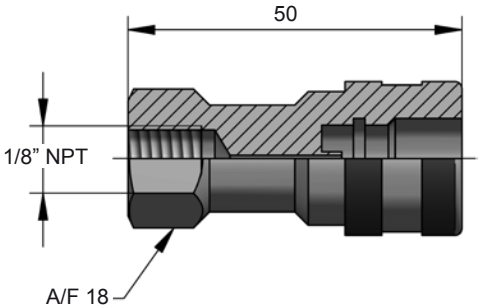


## VD 14

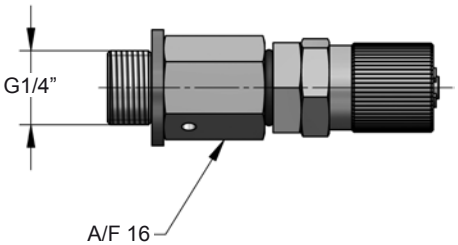


## MN-18-400-40

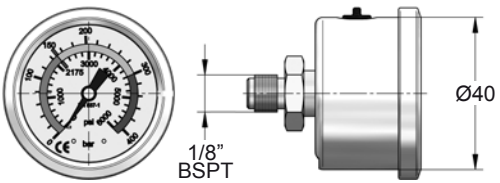

AZOL GAS

# CONTROL PANELS

*Accessories*

## MN-14-600-40

New!

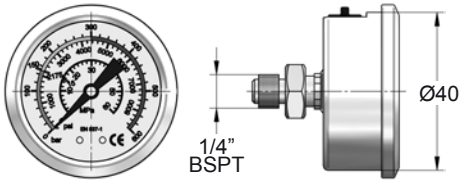


## MN-14-600-62

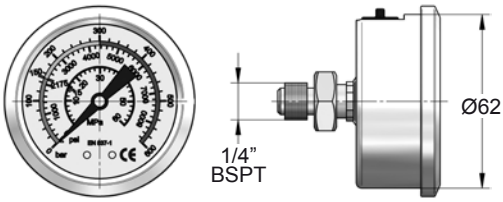


## SPS 1/4

RoHS 2002/95/EC

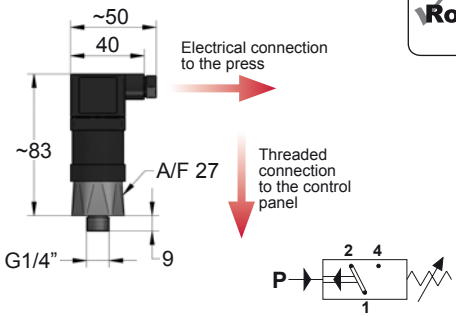


**HOW TO ORDER**




## SPS 1/8

RoHS 2002/95/EC

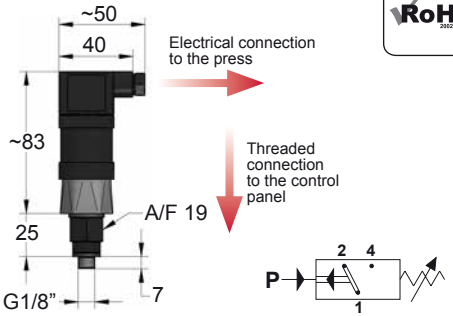


**HOW TO ORDER**




## TECHNICAL DATA

| | |
|---|---|
| **Range:** | 50 - 200 bar. |
| **Tolerance:** | ±5 bar a 20 ºC. |
| **Thread:** | G1/4" y G1/8" |
| **Tension:** | Max. 250 V. |
| **Safey over-pressure:** | 300 bar. |
| **Working temperature:** | -25 ºC to +50 ºC. |

If the pressure of the piping circuit drops below a set limit user (optimal minimum operation), the switch sends a signal can be used to either warn or stop mechanism that is associated.

## ADVANTAGES

- Compact design.
- Allows automatic control of piping circuits.
- Alert previously avoiding the production of defective parts.
- Increased efficiency in production.

# DISTRIBUTION BLOCKS

*Accessories*

AZOL GAS

## PLC M6

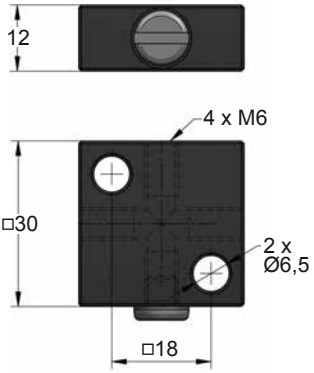


## PLR M6

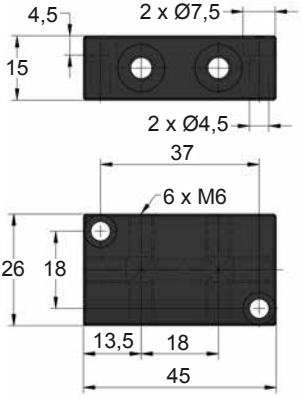


## PLH M6

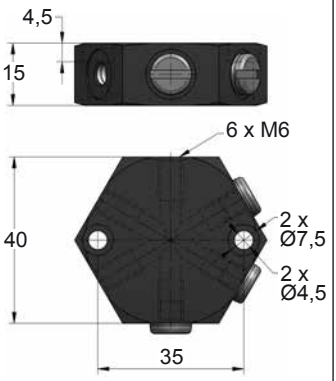


## PLD 2

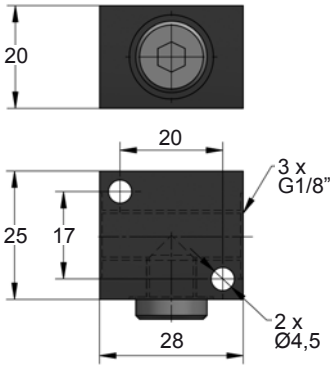


## PLF 4

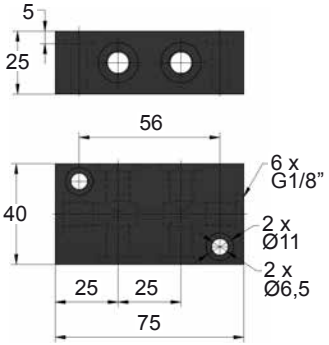


## PLF 2

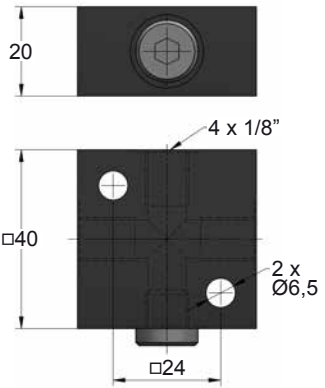


## PLD 4

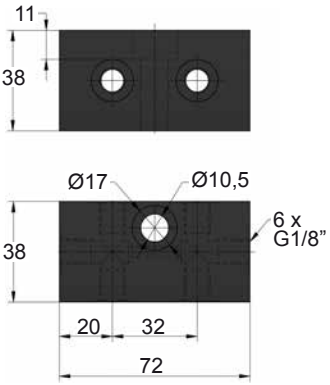


## PLH 1/8

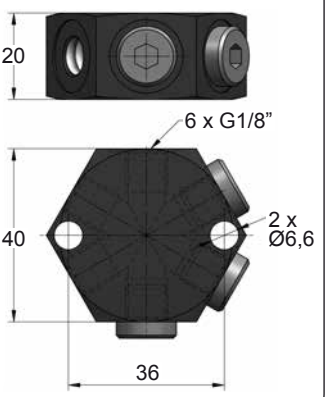

AZOL GAS

# DISTRIBUTION BLOCKS

*Accessories*

## PLD 6

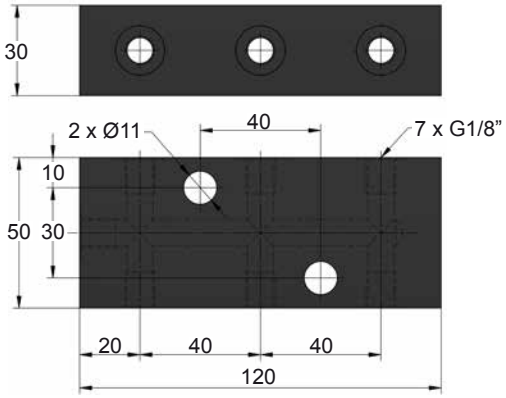


## PLD 7

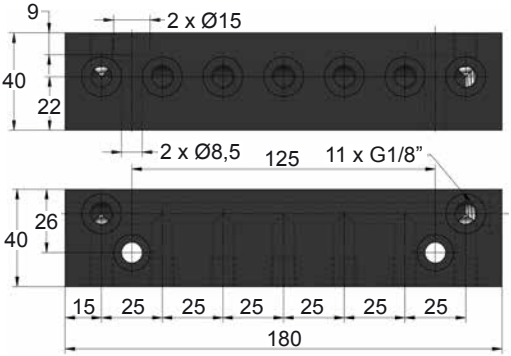


## PLD 8

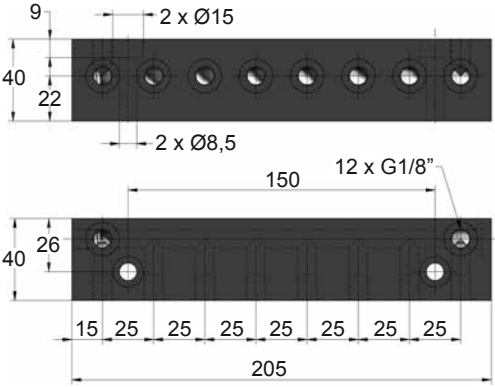


## PLF 8

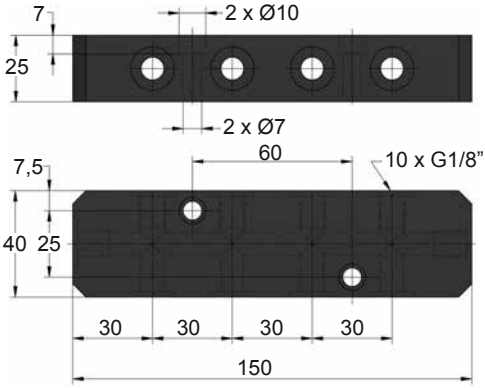


## PLK 8

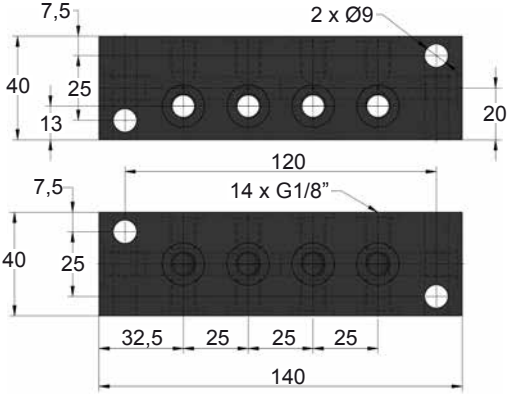


## PLD 10

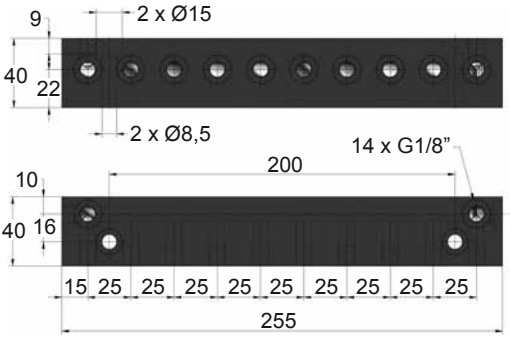

# G1/8" MINIMESS

*Accessories*

AZOL GAS

## SGS

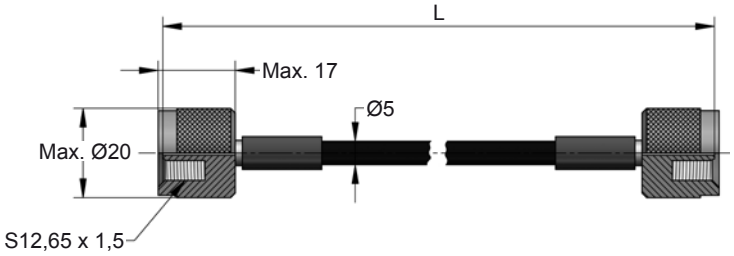


| ORDER | L +5 -0 (mm) |
|---|---|
| SGS 200 | 200 |
| SGS 300 | 300 |
| SGS 400 | 400 |
| SGS 500 | 500 |
| SGS 630 | 630 |
| SGS 800 | 800 |
| SGS 1000 | 1000 |
| SGS 1200 | 1200 |
| SGS 1250 | 1250 |
| SGS 1500 | 1500 |
| SGS 2000 | 2000 |
| SGS 2500 | 2500 |
| SGS 3000 | 3000 |

| | |
|---|---|
| ENG | ORDER |
| DEU | BESTELL |
| FRA | COMMANDE |
| ITA | ORDINE |
| ESP | PEDIDO |
| POR | PEDIDO |


SGS 200


SGS 200 G

EM.24.54.700
90.25
W-DX35-72
SMS DNH 3217n

## RGS

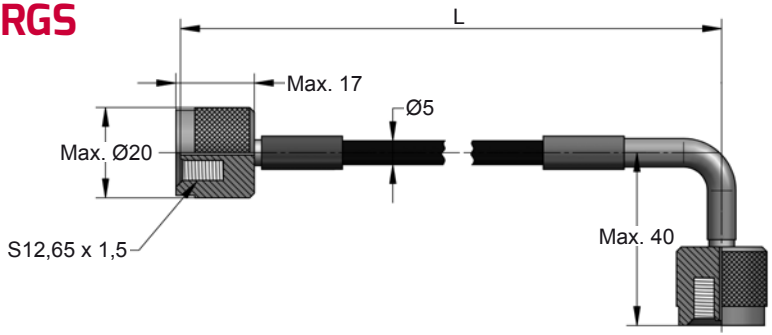


| ORDER | L +5 -0 (mm) |
|---|---|
| RGS 200 | 200 |
| RGS 300 | 300 |
| RGS 400 | 400 |
| RGS 500 | 500 |
| RGS 630 | 630 |
| RGS 800 | 800 |
| RGS 1000 | 1000 |
| RGS 1200 | 1200 |
| RGS 1250 | 1250 |
| RGS 1500 | 1500 |
| RGS 2000 | 2000 |
| RGS 2500 | 2500 |
| RGS 3000 | 3000 |

| | |
|---|---|
| ENG | ORDER |
| DEU | BESTELL |
| FRA | COMMANDE |
| ITA | ORDINE |
| ESP | PEDIDO |
| POR | PEDIDO |


RGS 200


RGS 200 G

## PGS

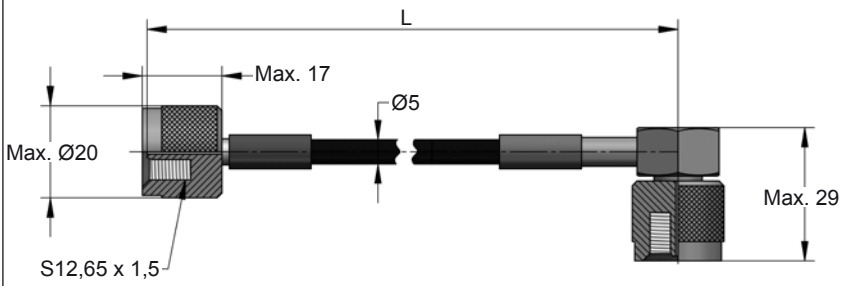


| ORDER | L +5 -0 (mm) |
|---|---|
| PGS 200 | 200 |
| PGS 300 | 300 |
| PGS 400 | 400 |
| PGS 500 | 500 |
| PGS 630 | 630 |
| PGS 800 | 800 |
| PGS 1000 | 1000 |
| PGS 1200 | 1200 |
| PGS 1250 | 1250 |
| PGS 1500 | 1500 |
| PGS 2000 | 2000 |
| PGS 2500 | 2500 |
| PGS 3000 | 3000 |

| | |
|---|---|
| ENG | ORDER |
| DEU | BESTELL |
| FRA | COMMANDE |
| ITA | ORDINE |
| ESP | PEDIDO |
| POR | PEDIDO |


PGS 200


PGS 200 G

EM.24.54.700
90.25
W-DX35-72
SMS DNH 3217n

AZOL GAS

# G1/8" MINIMESS

Accessories

## RGR

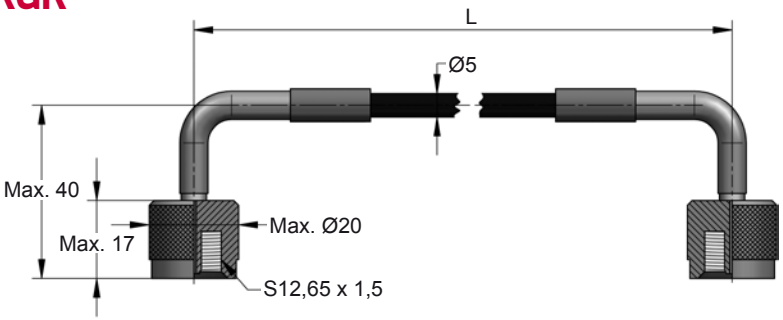


| ENG | ORDER |
|---|---|
| DEU | BESTELL |
| FRA | COMMANDE |
| ITA | ORDINE |
| ESP | PEDIDO |
| POR | PEDIDO |



RGR 200



RGR 200 G

| ORDER | L +5 -0 (mm) |
|---|---|
| RGR 200 | 200 |
| RGR 300 | 300 |
| RGR 400 | 400 |
| RGR 500 | 500 |
| RGR 630 | 630 |
| RGR 800 | 800 |
| RGR 1000 | 1000 |
| RGR 1200 | 1200 |
| RGR 1250 | 1250 |
| RGR 1500 | 1500 |
| RGR 2000 | 2000 |
| RGR 2500 | 2500 |
| RGR 3000 | 3000 |

## PGP

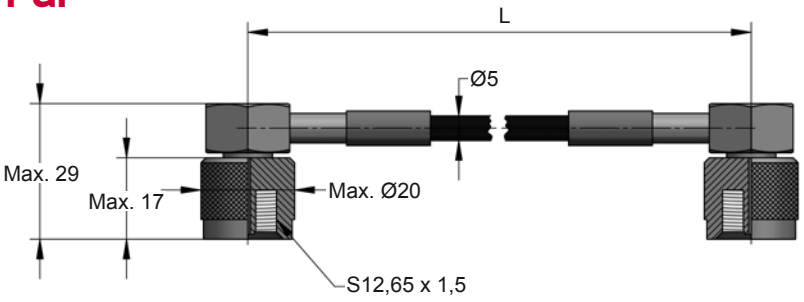


| ENG | ORDER |
|---|---|
| DEU | BESTELL |
| FRA | COMMANDE |
| ITA | ORDINE |
| ESP | PEDIDO |
| POR | PEDIDO |



PGP 200



PGP 200 G

| ORDER | L +5 -0 (mm) |
|---|---|
| PGP 200 | 200 |
| PGP 300 | 300 |
| PGP 400 | 400 |
| PGP 500 | 500 |
| PGP 630 | 630 |
| PGP 800 | 800 |
| PGP 1000 | 1000 |
| PGP 1200 | 1200 |
| PGP 1250 | 1250 |
| PGP 1500 | 1500 |
| PGP 2000 | 2000 |
| PGP 2500 | 2500 |
| PGP 3000 | 3000 |

EM.24.54.700
90.25
W-DX35-72
SMS DNH 3217n

## GST

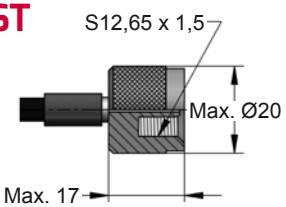


## GPT

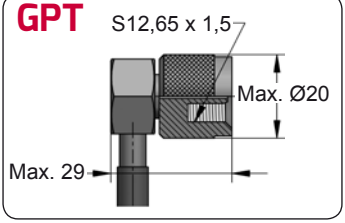


## GRT

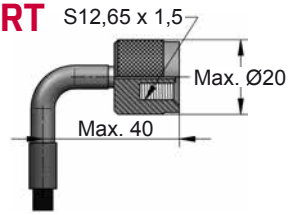


## GF 02




Pmax 630 bar

Tmax 100 ºC

Rmin 20 mm

## RBP 5

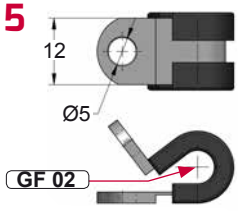


## CM 1/8

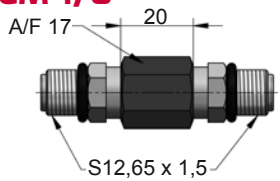

# G1/8” MINIMESS

*Accessories*

AZOL GAS

## SKK 12R 1/8

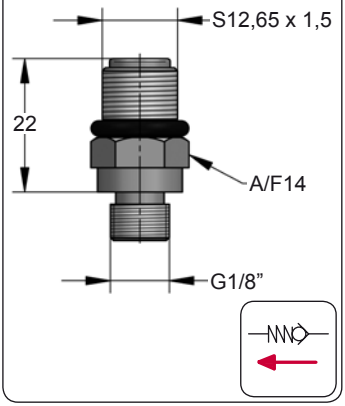


## SKK L

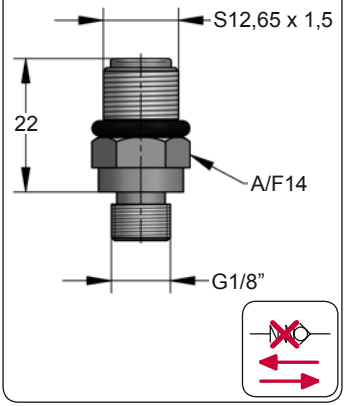


## SKK 12R 1/4

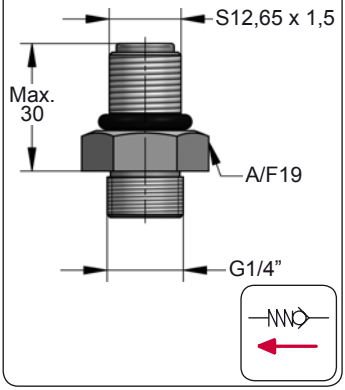


## CF 01 24

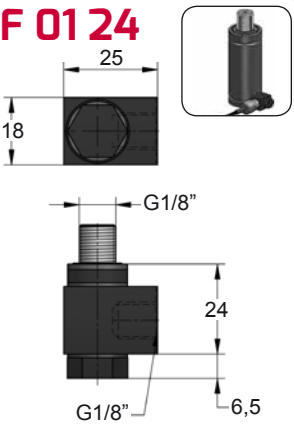


## CF 01 38

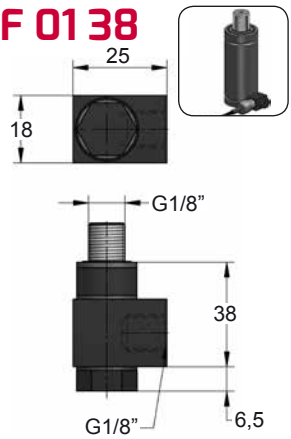


## CF 01 48

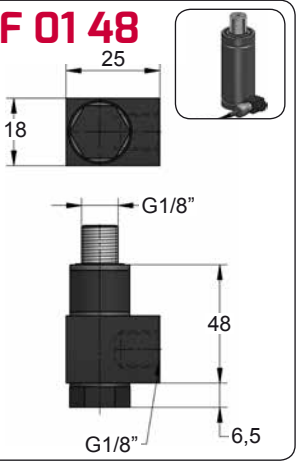


## CF 02 26

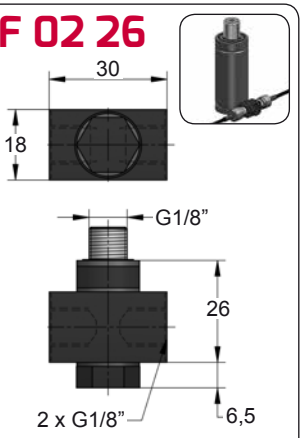


## CF 02 40

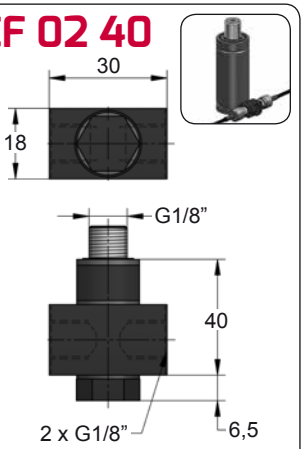


## CF 02 50

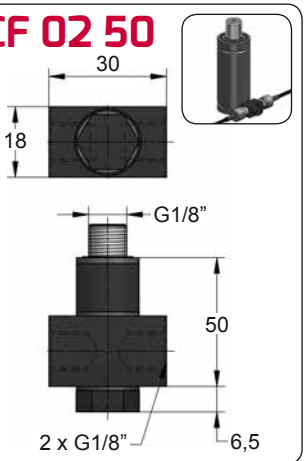

AZOL GAS

# G1/8" MINIMESS

*Accessories*

## CF 03 34



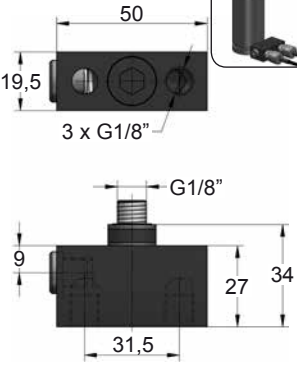


## CF 03 48



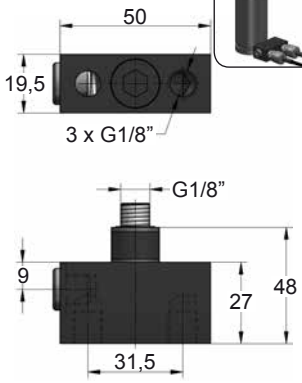


## CF 03 55



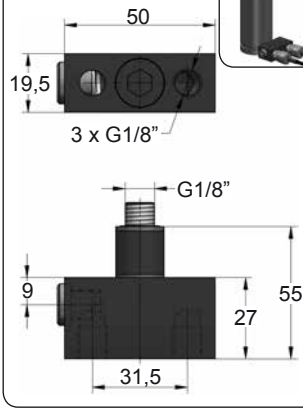


## CF 04 26






## CF 04 40






## CF 04 50






## CF 05 27






## CF 05 41






## CF 05 48



# M8 x 1

*Accessories*

AZOL GAS

## BK

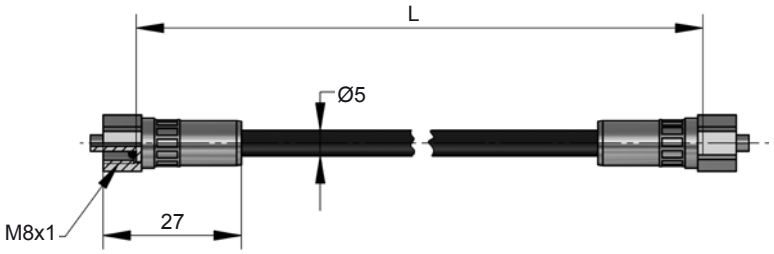


| ORDER | L +5 -0 (mm) |
|---|---|
| BK 200 | 200 |
| BK 300 | 300 |
| BK 400 | 400 |
| BK 500 | 500 |
| BK 630 | 630 |
| BK 800 | 800 |
| BK 1000 | 1000 |
| BK 1200 | 1200 |
| BK 1250 | 1250 |
| BK 1500 | 1500 |
| BK 2000 | 2000 |
| BK 2500 | 2500 |
| BK 3000 | 3000 |

| | |
|---|---|
| ENG | ORDER |
| DEU | BESTELL |
| FRA | COMMANDE |
| ITA | ORDINE |
| ESP | PEDIDO |
| POR | PEDIDO |



BK 200



BK 200 G

## BKRT

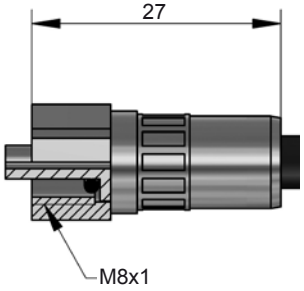


## GF 02






Pmax 400 bar

Tmax 100 ºC




20 mm

## RBP 5

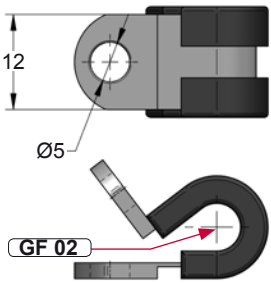

AZOL GAS

# M8 x 1
*Accessories*

## KRM6



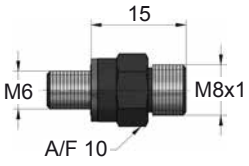


## KRM8



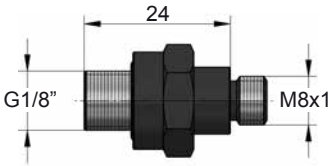


## 18 MS 1

New!



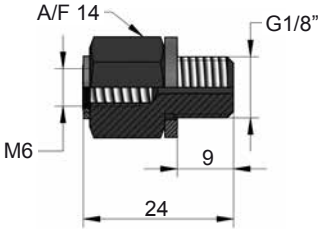


## 90 BK



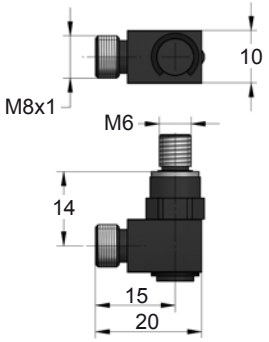


## TE BK



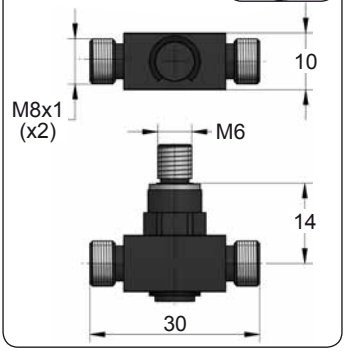


## KRMK



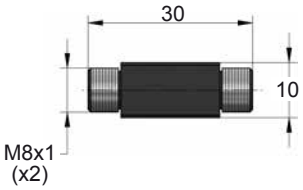


## KCMK



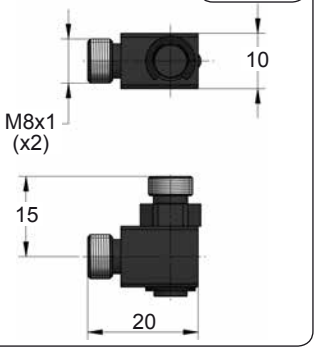


## KTMK



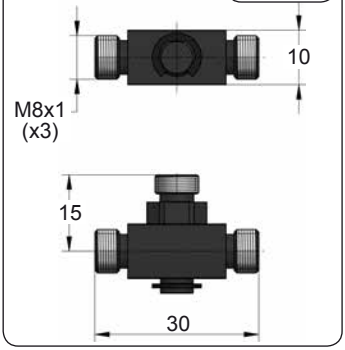

# M12 x 1,5

*Accessories*

AZOL GAS

## TNRR

New!

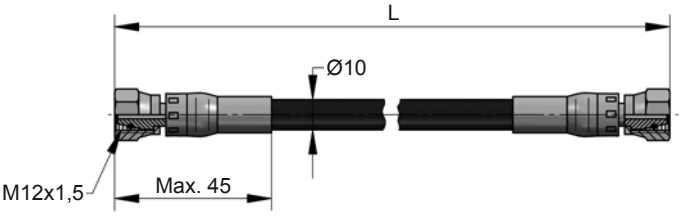


| ORDER | L +5 -0 (mm) |
|---|---|
| TNRR 200 | 200 |
| TNRR 300 | 300 |
| TNRR 400 | 400 |
| TNRR 500 | 500 |
| TNRR 630 | 630 |
| TNRR 800 | 800 |
| TNRR 1000 | 1000 |
| TNRR 1200 | 1200 |
| TNRR 1250 | 1250 |
| TNRR 1500 | 1500 |
| TNRR 2000 | 2000 |
| TNRR 2500 | 2500 |
| TNRR 3000 | 3000 |

| | |
|---|---|
| ENG | ORDER |
| DEU | BESTELL |
| FRA | COMMANDE |
| ITA | ORDINE |
| ESP | PEDIDO |
| POR | PEDIDO |



TNRR 200

## TNRL

New!

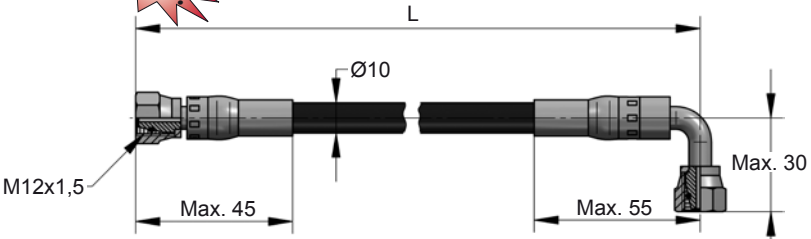


| ORDER | L +5 -0 (mm) |
|---|---|
| TNRL 200 | 200 |
| TNRL 300 | 300 |
| TNRL 400 | 400 |
| TNRL 500 | 500 |
| TNRL 630 | 630 |
| TNRL 800 | 800 |
| TNRL 1000 | 1000 |
| TNRL 1200 | 1200 |
| TNRL 1250 | 1250 |
| TNRL 1500 | 1500 |
| TNRL 2000 | 2000 |
| TNRL 2500 | 2500 |
| TNRL 3000 | 3000 |

| | |
|---|---|
| ENG | ORDER |
| DEU | BESTELL |
| FRA | COMMANDE |
| ITA | ORDINE |
| ESP | PEDIDO |
| POR | PEDIDO |



TNRL 200

## TNLL

New!

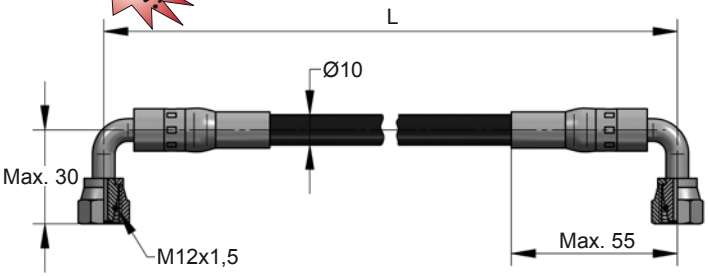


| ORDER | L +5 -0 (mm) |
|---|---|
| TNLL 200 | 200 |
| TNLL 300 | 300 |
| TNLL 400 | 400 |
| TNLL 500 | 500 |
| TNLL 630 | 630 |
| TNLL 800 | 800 |
| TNLL 1000 | 1000 |
| TNLL 1200 | 1200 |
| TNLL 1250 | 1250 |
| TNLL 1500 | 1500 |
| TNLL 2000 | 2000 |
| TNLL 2500 | 2500 |
| TNLL 3000 | 3000 |

| | |
|---|---|
| ENG | ORDER |
| DEU | BESTELL |
| FRA | COMMANDE |
| ITA | ORDINE |
| ESP | PEDIDO |
| POR | PEDIDO |



TNLL 200

AZOL GAS

# M12 x 1,5

*Accessories*

## TNRC

New!

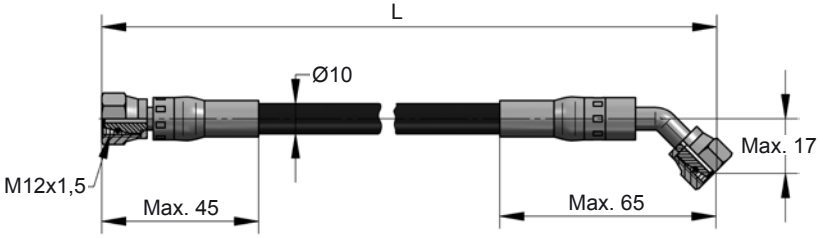


| ORDER | $L^{+5}_{-0}$ (mm) |
|---|---|
| TNRC 200 | 200 |
| TNRC 300 | 300 |
| TNRC 400 | 400 |
| TNRC 500 | 500 |
| TNRC 630 | 630 |
| TNRC 800 | 800 |
| TNRC 1000 | 1000 |
| TNRC 1200 | 1200 |
| TNRC 1250 | 1250 |
| TNRC 1500 | 1500 |
| TNRC 2000 | 2000 |
| TNRC 2500 | 2500 |
| TNRC 3000 | 3000 |

| | |
|---|---|
| ENG | ORDER |
| DEU | BESTELL |
| FRA | COMMANDE |
| ITA | ORDINE |
| ESP | PEDIDO |
| POR | PEDIDO |



TNRC 200

## TNCC

New!

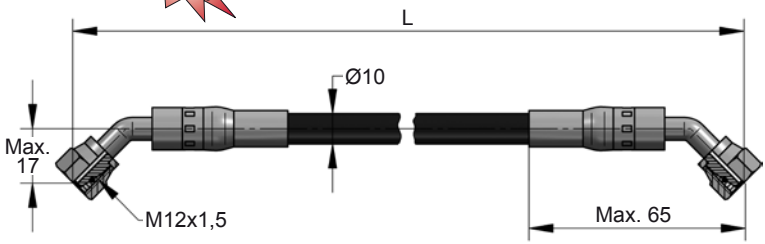


| ORDER | $L^{+5}_{-0}$ (mm) |
|---|---|
| TNCC 200 | 200 |
| TNCC 300 | 300 |
| TNCC 400 | 400 |
| TNCC 500 | 500 |
| TNCC 630 | 630 |
| TNCC 800 | 800 |
| TNCC 1000 | 1000 |
| TNCC 1200 | 1200 |
| TNCC 1250 | 1250 |
| TNCC 1500 | 1500 |
| TNCC 2000 | 2000 |
| TNCC 2500 | 2500 |
| TNCC 3000 | 3000 |

| | |
|---|---|
| ENG | ORDER |
| DEU | BESTELL |
| FRA | COMMANDE |
| ITA | ORDINE |
| ESP | PEDIDO |
| POR | PEDIDO |



TNCC 200

## TNLC

New!

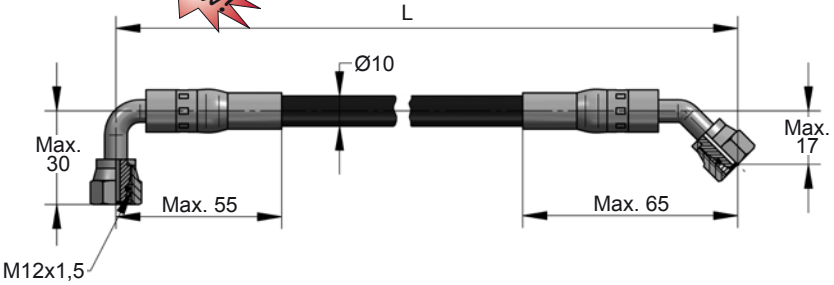


| ORDER | $L^{+5}_{-0}$ (mm) |
|---|---|
| TNLC 200 | 200 |
| TNLC 300 | 300 |
| TNLC 400 | 400 |
| TNLC 500 | 500 |
| TNLC 630 | 630 |
| TNLC 800 | 800 |
| TNLC 1000 | 1000 |
| TNLC 1200 | 1200 |
| TNLC 1250 | 1250 |
| TNLC 1500 | 1500 |
| TNLC 2000 | 2000 |
| TNLC 2500 | 2500 |
| TNLC 3000 | 3000 |

| | |
|---|---|
| ENG | ORDER |
| DEU | BESTELL |
| FRA | COMMANDE |
| ITA | ORDINE |
| ESP | PEDIDO |
| POR | PEDIDO |



TNLC 200

# M12 x 1,5

*Accessories*

AZOL GAS

## TNRT

New!

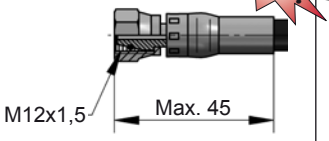


## TNLT

New!

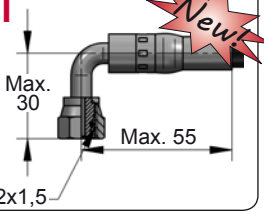


## TNCT

New!

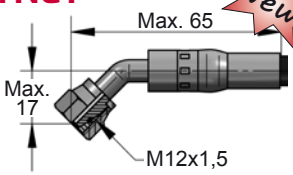


## GF 05




| Pmax | Tmax | Rmin |
|---|---|---|
| 345 bar | 100 °C | 40 mm |

## RBP 10

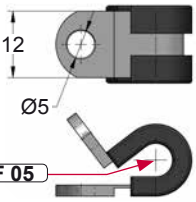


## DRM8

New!

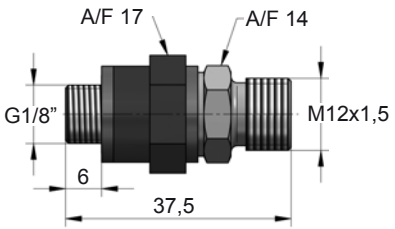


## DRM4

New!

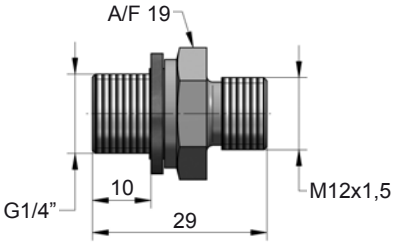


## DLFD

New!

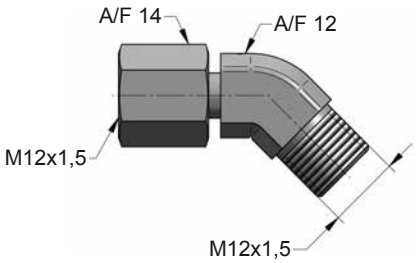


## DCFD

New!

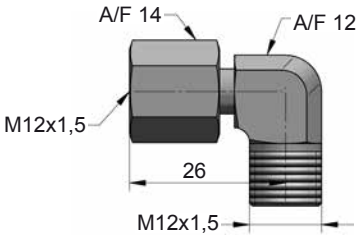

AZOL GAS

# M12 x 1,5

*Accessories*

## DWFD

New!

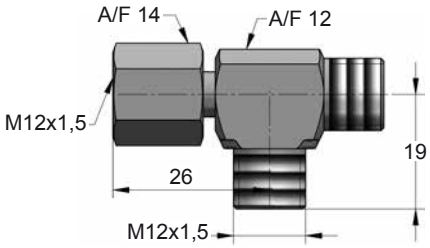


## DTFD

New!

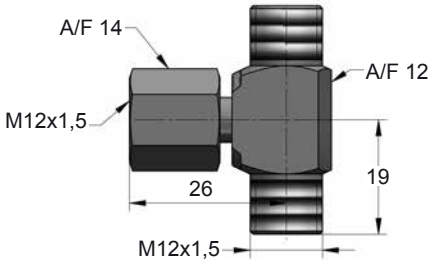


## DIMD

New!

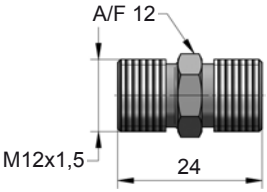


## DCMD

New!

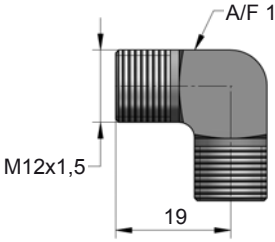


## DTMD

New!

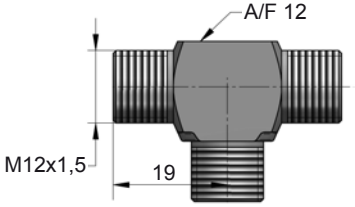


## DXMD

New!

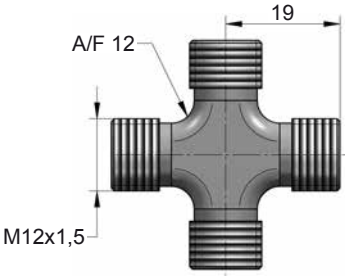

# 7/16" UNF

*Accessories*

AZOL GAS

## TFRR

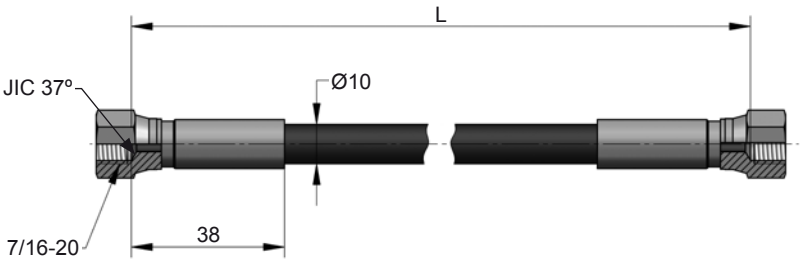


| ENG | ORDER |
|---|---|
| DEU | BESTELL |
| FRA | COMMANDE |
| ITA | ORDINE |
| ESP | PEDIDO |
| POR | PEDIDO |



TFRR 200

| ORDER | L +5 -0 (mm) |
|---|---|
| TFRR 200 | 200 |
| TFRR 300 | 300 |
| TFRR 400 | 400 |
| TFRR 500 | 500 |
| TFRR 630 | 630 |
| TFRR 800 | 800 |
| TFRR 1000 | 1000 |
| TFRR 1200 | 1200 |
| TFRR 1250 | 1250 |
| TFRR 1500 | 1500 |
| TFRR 2000 | 2000 |
| TFRR 2500 | 2500 |
| TFRR 3000 | 3000 |

## TFRL

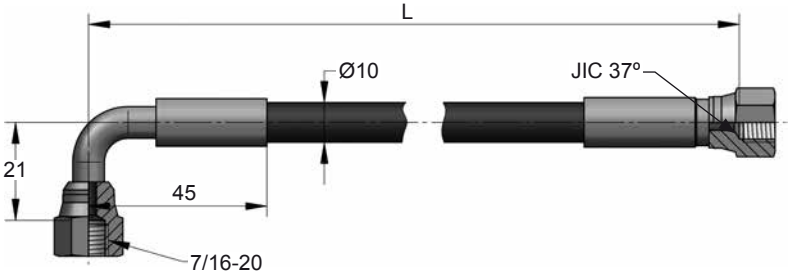


| ENG | ORDER |
|---|---|
| DEU | BESTELL |
| FRA | COMMANDE |
| ITA | ORDINE |
| ESP | PEDIDO |
| POR | PEDIDO |



TFRL 200

| ORDER | L +5 -0 (mm) |
|---|---|
| TFRL 200 | 200 |
| TFRL 300 | 300 |
| TFRL 400 | 400 |
| TFRL 500 | 500 |
| TFRL 630 | 630 |
| TFRL 800 | 800 |
| TFRL 1000 | 1000 |
| TFRL 1200 | 1200 |
| TFRL 1250 | 1250 |
| TFRL 1500 | 1500 |
| TFRL 2000 | 2000 |
| TFRL 2500 | 2500 |
| TFRL 3000 | 3000 |

## TFLL

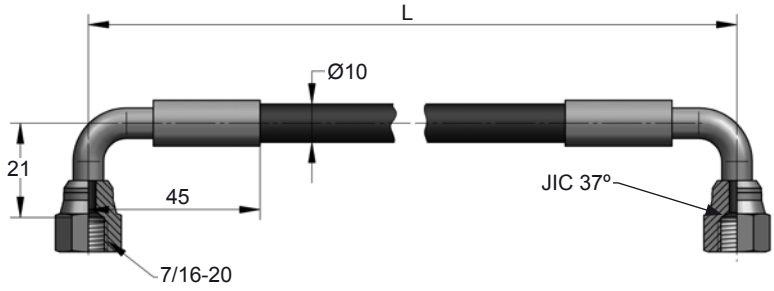


| ENG | ORDER |
|---|---|
| DEU | BESTELL |
| FRA | COMMANDE |
| ITA | ORDINE |
| ESP | PEDIDO |
| POR | PEDIDO |



TFLL 200

| ORDER | L +5 -0 (mm) |
|---|---|
| TFLL 200 | 200 |
| TFLL 300 | 300 |
| TFLL 400 | 400 |
| TFLL 500 | 500 |
| TFLL 630 | 630 |
| TFLL 800 | 800 |
| TFLL 1000 | 1000 |
| TFLL 1200 | 1200 |
| TFLL 1250 | 1250 |
| TFLL 1500 | 1500 |
| TFLL 2000 | 2000 |
| TFLL 2500 | 2500 |
| TFLL 3000 | 3000 |

AZOL GAS

# 7/16" UNF

*Accessories*

## TFRT

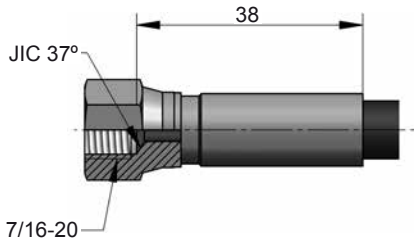


## TFLT

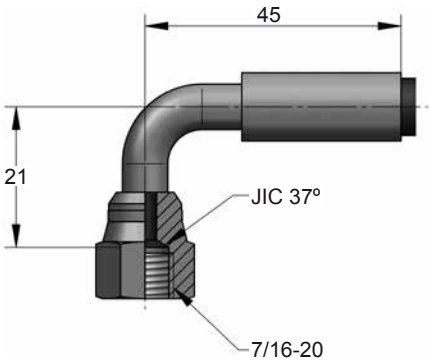


## GF 05



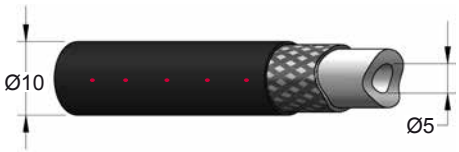


| Pmax | Tmax | Rmin |
|---|---|---|
| 345 bar | 100 ºC | 40 mm |

## RBP 10

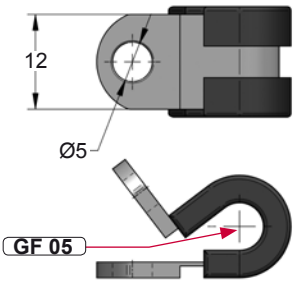

# 7/16” UNF MINIMESS

*Accessories*

AZOL GAS

## SMRR

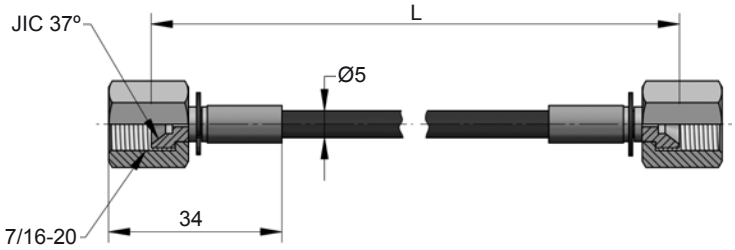


| ORDER | $L^{+5}_{-0}$ (mm) |
|---|---|
| SMRR 200 | 200 |
| SMRR 300 | 300 |
| SMRR 400 | 400 |
| SMRR 500 | 500 |
| SMRR 630 | 630 |
| SMRR 800 | 800 |
| SMRR 1000 | 1000 |
| SMRR 1200 | 1200 |
| SMRR 1250 | 1250 |
| SMRR 1500 | 1500 |
| SMRR 2000 | 2000 |
| SMRR 2500 | 2500 |
| SMRR 3000 | 3000 |

| | |
|---|---|
| ENG | ORDER |
| DEU | BESTELL |
| FRA | COMMANDE |
| ITA | ORDINE |
| ESP | PEDIDO |
| POR | PEDIDO |



SMRR 200



SMRR 200 G

AZOL GAS

# 7/16" UNF MINIMESS

*Accessories*

## SMRT

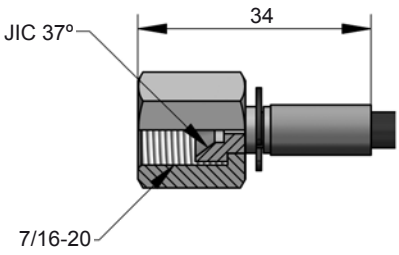


## GF 02

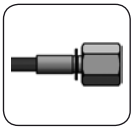




Pmax 345 bar | Tmax 100 ºC | Rmin 20 mm

## RBP 5

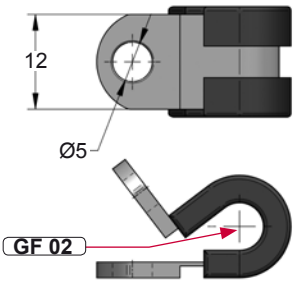

# 7/16” UNF

*Accessories*

AZOL GAS

## 7RM8

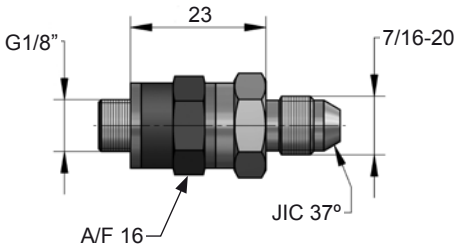


## 7CM8

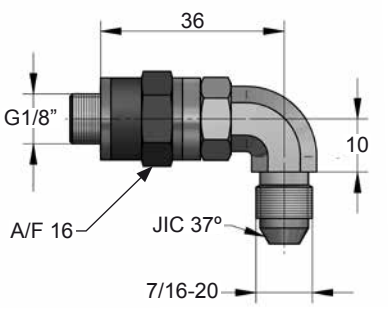


## 7EM8

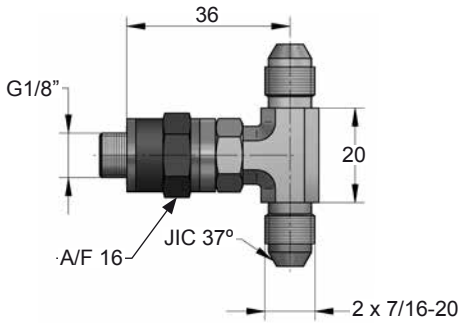


## 7LM8

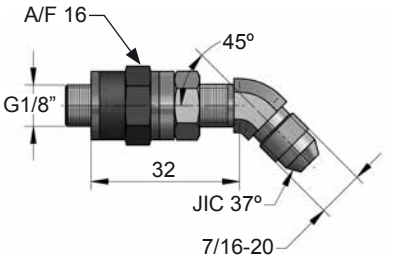


## 7TL8

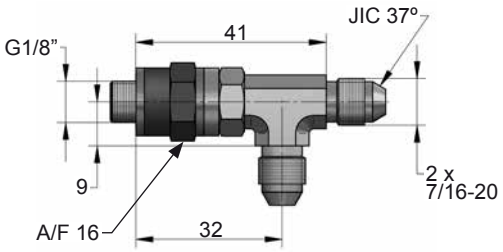


## 7TM7

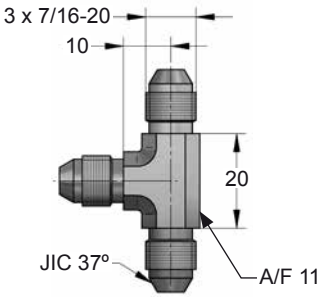

AZOL GAS

# 7/16" UNF

*Accessories*

## 7IM7

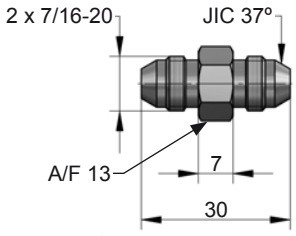


## 7NM7

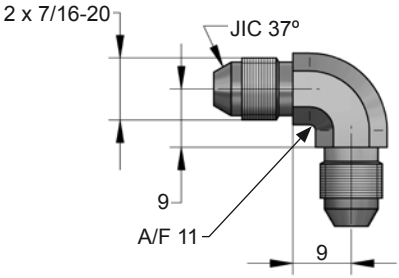


## 7XM7

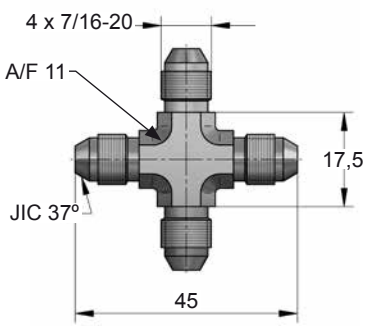


## 7CF7

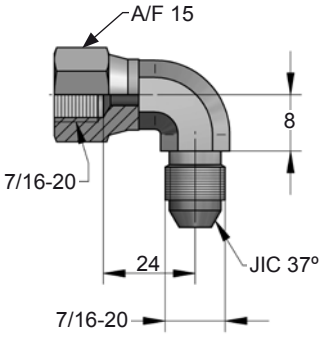


## 7TF7

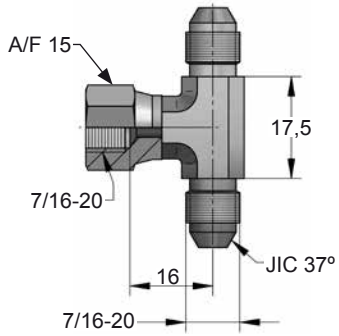


## 7WF7

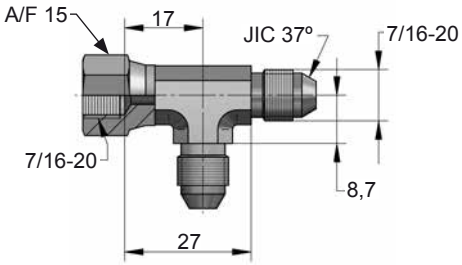

# 9/16" UNF

*Accessories*

AZOL GAS

## MCRR

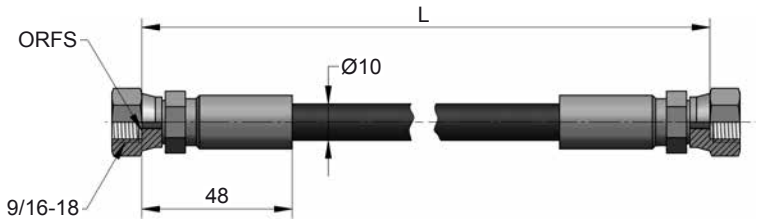


| ORDER | L +5 -0 (mm) |
|---|---|
| MCRR 200 | 200 |
| MCRR 300 | 300 |
| MCRR 400 | 400 |
| MCRR 500 | 500 |
| MCRR 630 | 630 |
| MCRR 800 | 800 |
| MCRR 1000 | 1000 |
| MCRR 1200 | 1200 |
| MCRR 1250 | 1250 |
| MCRR 1500 | 1500 |
| MCRR 2000 | 2000 |

| | |
|---|---|
| ENG | ORDER |
| DEU | BESTELL |
| FRA | COMMANDE |
| ITA | ORDINE |
| ESP | PEDIDO |
| POR | PEDIDO |



MCRR 200

## MCRL

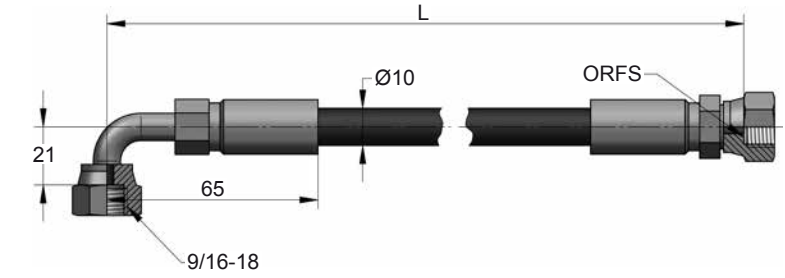


| ORDER | L +5 -0 (mm) |
|---|---|
| MCRL 200 | 200 |
| MCRL 300 | 300 |
| MCRL 400 | 400 |
| MCRL 500 | 500 |
| MCRL 630 | 630 |
| MCRL 800 | 800 |
| MCRL 1000 | 1000 |
| MCRL 1200 | 1200 |
| MCRL 1250 | 1250 |
| MCRL 1500 | 1500 |
| MCRL 2000 | 2000 |
| MCRL 2500 | 2500 |
| MCRL 3000 | 3000 |

| | |
|---|---|
| ENG | ORDER |
| DEU | BESTELL |
| FRA | COMMANDE |
| ITA | ORDINE |
| ESP | PEDIDO |
| POR | PEDIDO |



MCRL 200

## MCLL

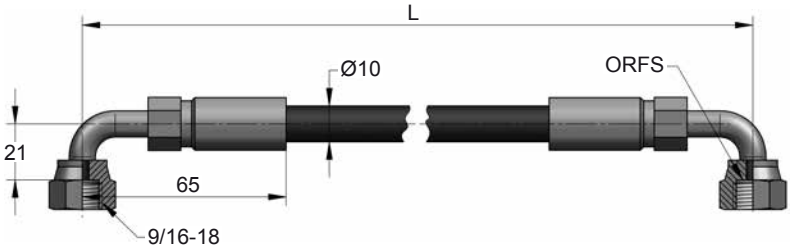


| ORDER | L +5 -0 (mm) |
|---|---|
| MCLL 200 | 200 |
| MCLL 300 | 300 |
| MCLL 400 | 400 |
| MCLL 500 | 500 |
| MCLL 630 | 630 |
| MCLL 800 | 800 |
| MCLL 1000 | 1000 |
| MCLL 1200 | 1200 |
| MCLL 1250 | 1250 |
| MCLL 1500 | 1500 |
| MCLL 2000 | 2000 |
| MCLL 2500 | 2500 |
| MCLL 3000 | 3000 |

| | |
|---|---|
| ENG | ORDER |
| DEU | BESTELL |
| FRA | COMMANDE |
| ITA | ORDINE |
| ESP | PEDIDO |
| POR | PEDIDO |



MCLL 200

AZOL GAS

# 9/16" UNF

*Accessories*

## MCRT

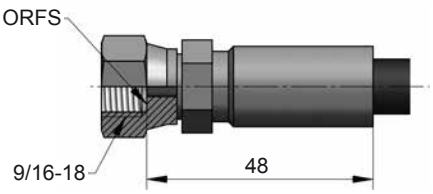


## MCLT

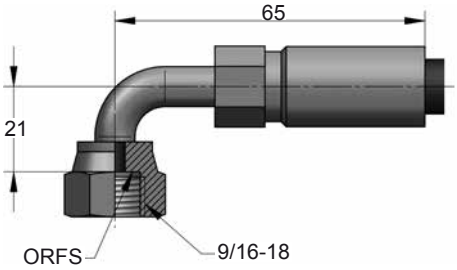


## GF 05






| Pmax | Tmax | Rmin |
|---|---|---|
| 345 bar | 100 ºC | 40 mm |

## RBP 10

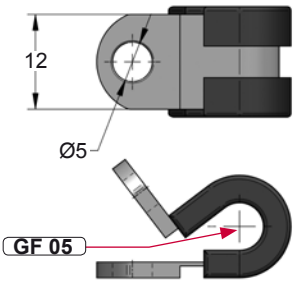

# 9/16" UNF MINIMESS

*Accessories*

AZOL GAS

## GTRR

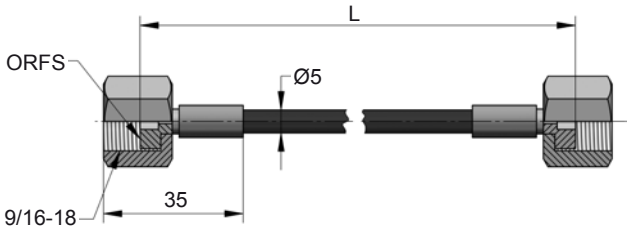


| ORDER | L +5 -0 (mm) |
|---|---|
| GTRR 200 | 200 |
| GTRR 300 | 300 |
| GTRR 400 | 400 |
| GTRR 500 | 500 |
| GTRR 630 | 630 |
| GTRR 800 | 800 |
| GTRR 1000 | 1000 |
| GTRR 1200 | 1200 |
| GTRR 1250 | 1250 |
| GTRR 1500 | 1500 |
| GTRR 2000 | 2000 |

| ENG | ORDER |
|---|---|
| DEU | BESTELL |
| FRA | COMMANDE |
| ITA | ORDINE |
| ESP | PEDIDO |
| POR | PEDIDO |



GTRR 200



GTRR 200 G

## GTRL

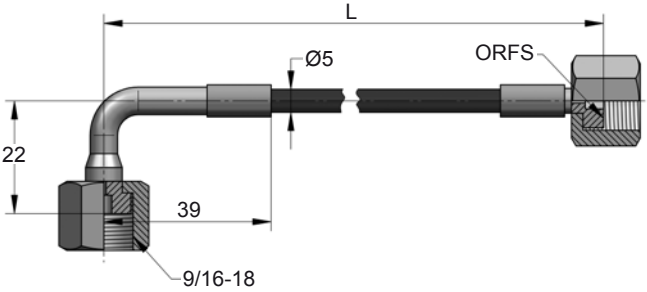


| ORDER | L +5 -0 (mm) |
|---|---|
| GTRL 200 | 200 |
| GTRL 300 | 300 |
| GTRL 400 | 400 |
| GTRL 500 | 500 |
| GTRL 630 | 630 |
| GTRL 800 | 800 |
| GTRL 1000 | 1000 |
| GTRL 1200 | 1200 |
| GTRL 1250 | 1250 |
| GTRL 1500 | 1500 |
| GTRL 2000 | 2000 |
| GTRL 2500 | 2500 |
| GTRL 3000 | 3000 |

| ENG | ORDER |
|---|---|
| DEU | BESTELL |
| FRA | COMMANDE |
| ITA | ORDINE |
| ESP | PEDIDO |
| POR | PEDIDO |



GTRL 200



GTRL 200 G

## GTLL

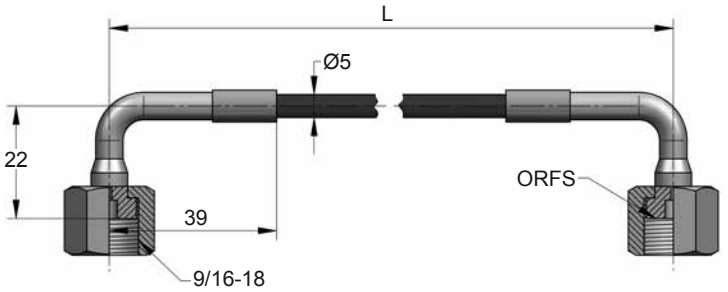


| ORDER | L +5 -0 (mm) |
|---|---|
| GTLL 200 | 200 |
| GTLL 300 | 300 |
| GTLL 400 | 400 |
| GTLL 500 | 500 |
| GTLL 630 | 630 |
| GTLL 800 | 800 |
| GTLL 1000 | 1000 |
| GTLL 1200 | 1200 |
| GTLL 1250 | 1250 |
| GTLL 1500 | 1500 |
| GTLL 2000 | 2000 |
| GTLL 2500 | 2500 |
| GTLL 3000 | 3000 |

| ENG | ORDER |
|---|---|
| DEU | BESTELL |
| FRA | COMMANDE |
| ITA | ORDINE |
| ESP | PEDIDO |
| POR | PEDIDO |



GTLL 200

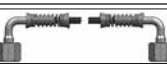

GTLL 200 G

AZOL GAS

# 9/16" UNF MINIMESS

*Accessories*

## GTRT

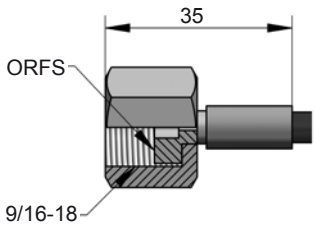


## GTLT

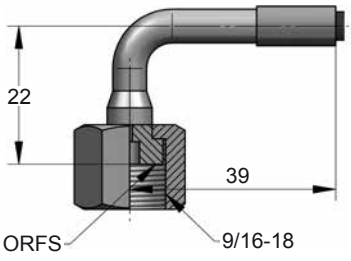


## GF 02

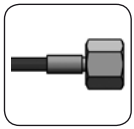




Pmax 345 bar | Tmax 100 ºC | Rmin 20 mm

## RBP 5

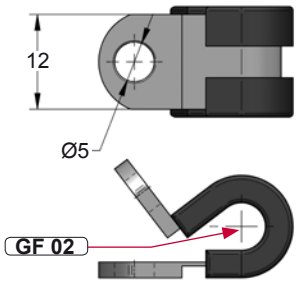

# 9/16" UNF

*Accessories*

AZOL GAS

## 9RM8

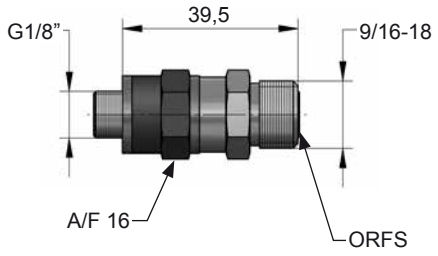


## 9CM8

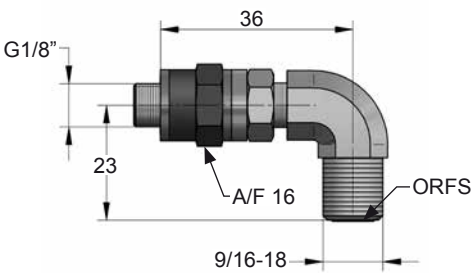


## 9EM8

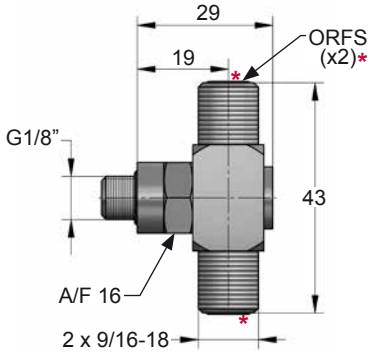


## 9LM8

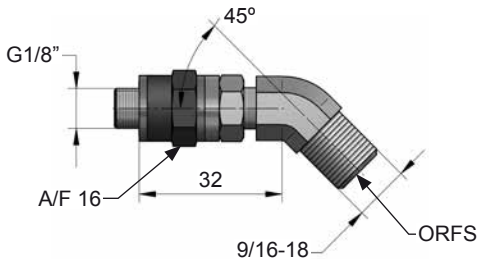


## 9TL8

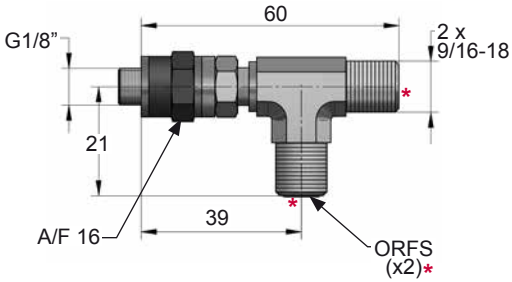


## 9TM9

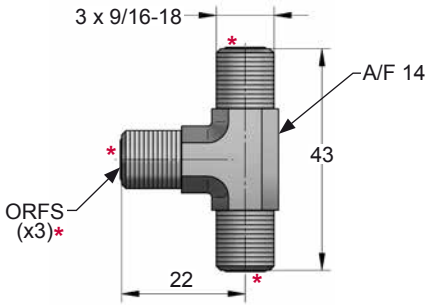

AZOL GAS

# 9/16" UNF

*Accessories*

## 9IM9

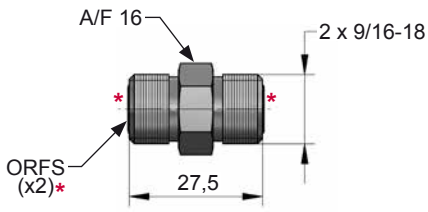


## 9SR9

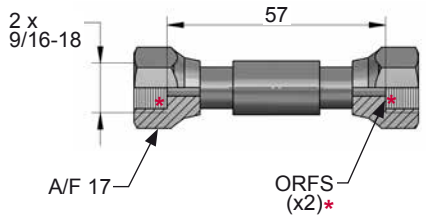


## 9XM9

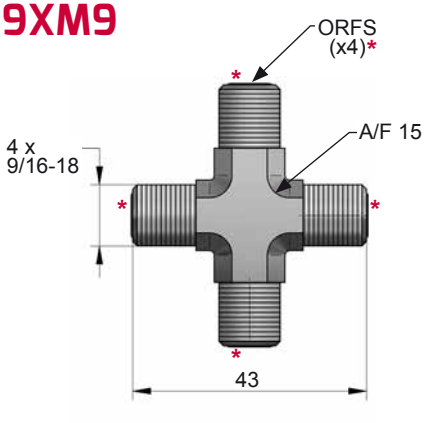


## 9CF9

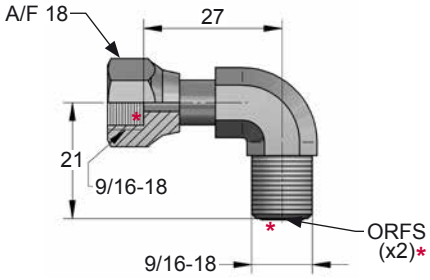


## 9TF9

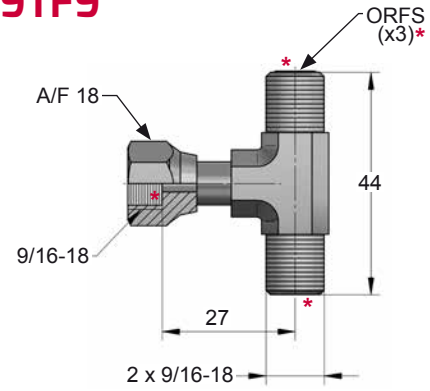


## 9WF9

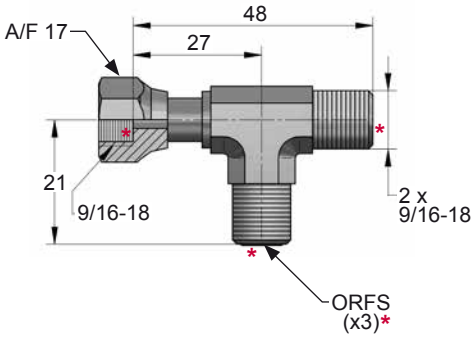

# COMPENSATION TANKS

*Accessories*

AZOL GAS

## DFC 75

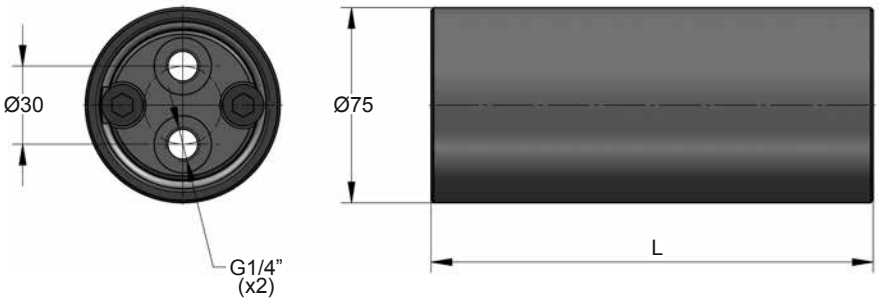


| ORDER | Vol. (l) | L (mm) |
|---|---|---|
| DFC 75 025 | 0.25 | 170 |
| DFC 75 050 | 0.50 | 250 |
| DFC 75 100 | 1.00 | 410 |

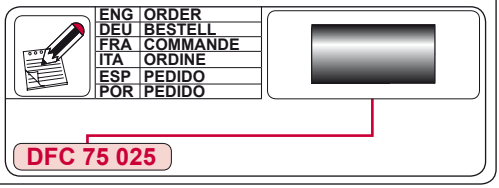


## DFC 95

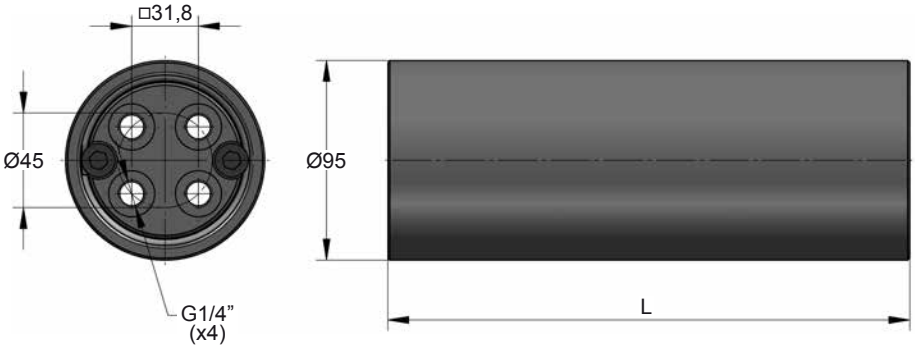


| ORDER | Vol. (l) | L (mm) |
|---|---|---|
| DFC 95 100 | 1.00 | 300 |
| DFC 95 200 | 2.00 | 500 |
| DFC 95 300 | 3.00 | 700 |
| DFC 95 400 | 4.00 | 900 |

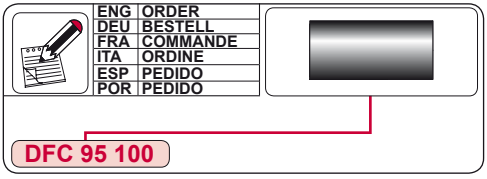

AZOL GAS

# COMPENSATION TANKS

*Accessories*

## DFC 120

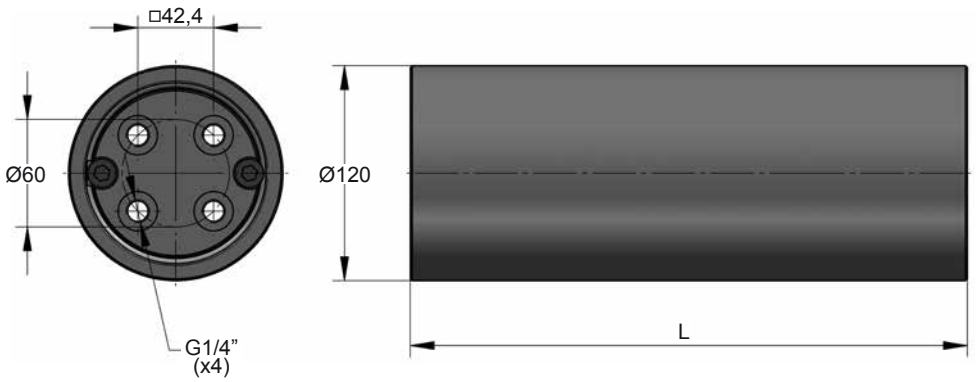


| ORDER | Vol. (l) | L (mm) |
|---|---|---|
| DFC 120 200 | 2.00 | 360 |
| DFC 120 400 | 4.00 | 615 |
| DFC 120 800 | 8.00 | 1125 |

| | |
|---|---|
| ENG | ORDER |
| DEU | BESTELL |
| FRA | COMMANDE |
| ITA | ORDINE |
| ESP | PEDIDO |
| POR | PEDIDO |

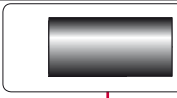

DFC 120 200

## ADCB

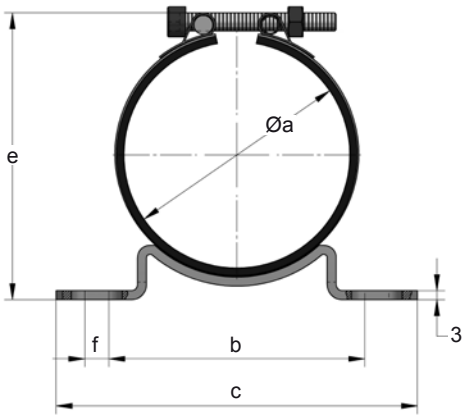





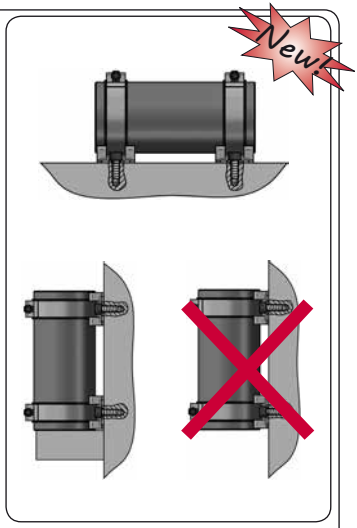


| ORDER | Øa (mm) | b (mm) | c (mm) | d (mm) | e (mm) | f (mm) |
|---|---|---|---|---|---|---|
| ADCB 75 | 75 | 85 | 120 | 40 | 96 | 8 |
| ADCB 95 | 95 | 85 | 120 | 40 | 115 | 8 |
| ADCB 120 | 120 | 100 | 156 | 50 | 154 | 18 |

| | |
|---|---|
| ENG | ORDER |
| DEU | BESTELL |
| FRA | COMMANDE |
| ITA | ORDINE |
| ESP | PEDIDO |
| POR | PEDIDO |

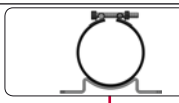

ADCB 75

# STRIKER PLATES

*Accessories*

AZOL GAS

## SPFI

STQ.70040

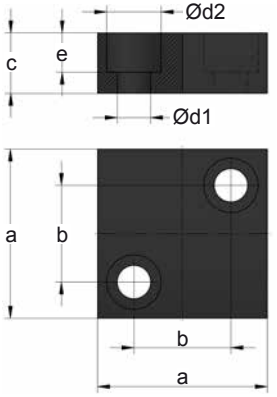


| ORDER | Ø $d_{max}$ | a (mm) | b (mm) | c (mm) | Ød1 (mm) | Ød2 (mm) | e (mm) |
|---|---|---|---|---|---|---|---|
| SPFI 001 | 15 | 40 | 21 | 15 | 9 | 15 | 10 |
| SPFI 002 | 25 | 56 | 32 | 20 | 11 | 18 | 13 |
| SPFI 003 | 50 | 71 | 48 | 20 | 11 | 18 | 13 |
| SPFI 004 | 65 | 90 | 67 | 20 | 11 | 18 | 13 |
| SPFI 005 | 95 | 140 | 110 | 20 | 11 | 18 | 13 |

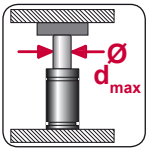


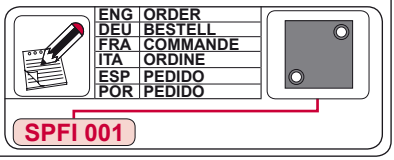


## SPVD

VDI 3003

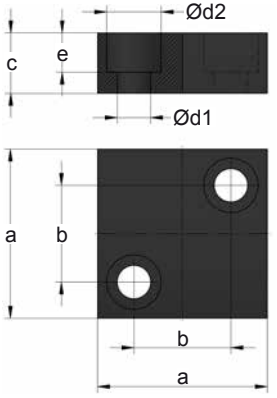


| ORDER | Ø $d_{max}$ | a (mm) | b (mm) | c (mm) | Ød1 (mm) | Ød2 (mm) | e (mm) |
|---|---|---|---|---|---|---|---|
| SPVD 001 | 15 | 40 | 24 | 15 | 7 | 11 | 7 |
| SPVD 002 | 50 | 70 | 50 | 15 | 9 | 15 | 9 |
| SPVD 003 | 80 | 90 | 70 | 15 | 9 | 15 | 9 |

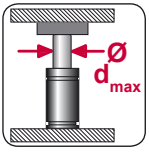





## SPFI

STQ.70040

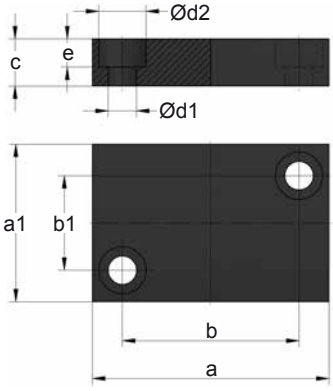


| ORDER | Ø $d_{max}$ | a (mm) | a1 (mm) | b (mm) | b1 (mm) | c (mm) | Ød1 (mm) | Ød2 (mm) | e (mm) |
|---|---|---|---|---|---|---|---|---|---|
| SPFI 010 | 15 | 50 | 25 | 32 | 8 | 12 | 7 | 11 | 7 |
| SPFI 011 | 20 | 55 | 30 | 40 | 14 | 12 | 7 | 11 | 7 |
| SPFI 012 | 25 | 70 | 35 | 48 | 14 | 15 | 9 | 15 | 9 |
| SPFI 013 | 36 | 75 | 50 | 56 | 30 | 15 | 9 | 15 | 9 |
| SPFI 014 | 50 | 85 | 60 | 66 | 40 | 15 | 9 | 15 | 9 |
| SPFI 015 | 65 | 100 | 80 | 72 | 56 | 20 | 11 | 18 | 11 |
| SPFI 016 | 95 | 110 | 100 | 85 | 75 | 20 | 11 | 18 | 11 |
| SPFI 017 | 95 | 130 | 110 | 100 | 80 | 20 | 11 | 18 | 11 |

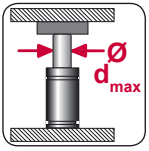


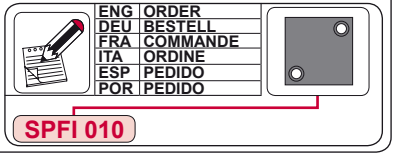

AZOL GAS

# STRIKER PLATES

*Accessories*

## SPRE

EM24.54.700

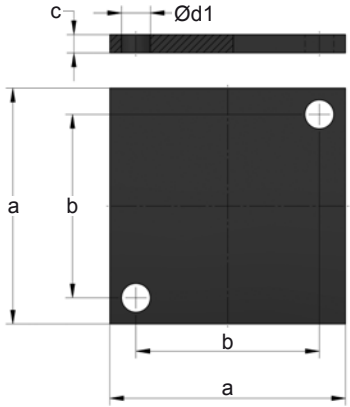


| ORDER | Ø $d_{max}$ | a (mm) | b (mm) | c (mm) | Ød1 (mm) |
|---|---|---|---|---|---|
| SPRE 010 | 45 | 70 | 50 | 3 | 11 |
| SPRE 011 | 60 | 90 | 70 | 3 | 11 |

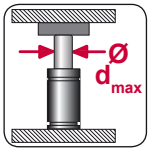





## SPRE

EM24.54.700

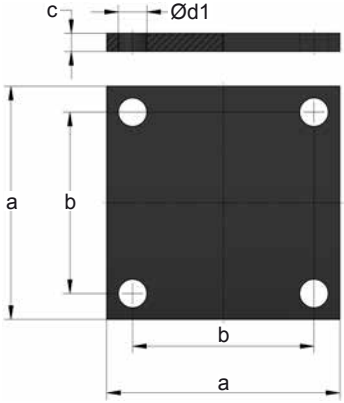


| ORDER | Ø $d_{max}$ | a (mm) | b (mm) | c (mm) | Ød1 (mm) |
|---|---|---|---|---|---|
| SPRE 001 | 80 | 105 | 85 | 3 | 11 |
| SPRE 002 | 95 | 125 | 105 | 3 | 11 |
| SPRE 003 | 100 | 150 | 125 | 3 | 13 |
| SPRE 004 | 130 | 190 | 165 | 3 | 13 |

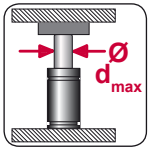





## SPPS

E24.54.815

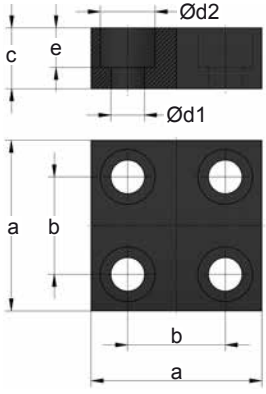


| ORDER | Ø $d_{max}$ | a (mm) | b (mm) | c (mm) | Ød1 (mm) | Ød2 (mm) | e (mm) |
|---|---|---|---|---|---|---|---|
| SPPS 001 | 15 | 40 | 21 | 15 | 9 | 15 | 10 |
| SPPS 002 | 25 | 56 | 32 | 20 | 11 | 18 | 13 |
| SPPS 003 | 65 | 90 | 67 | 20 | 11 | 18 | 13 |
| SPPS 004 | 95 | 140 | 110 | 20 | 11 | 18 | 13 |
| SPPS 005 | 130 | 155 | 125 | 20 | 11 | 18 | 13 |

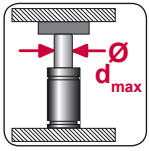


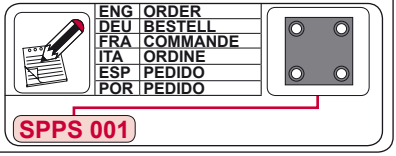

# DIE INFORMATION TAGS

*Accessories*

AZOL GAS

## PI-01

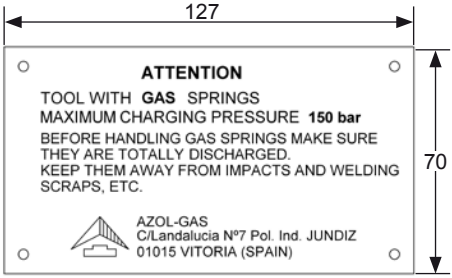


| | |
|---|---|
| ENG | ORDER |
| DEU | BESTELL |
| FRA | COMMANDE |
| ITA | ORDINE |
| ESP | PEDIDO |
| POR | PEDIDO |

PI-01-ENG

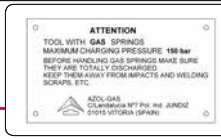


| | | | |
|---|---|---|---|
| PI-01-ESP | SPANISH | PI-01-POL | POLISH |
| PI-01-ENG | ENGLISH | PI-01-TUR | TURKISH |
| PI-01-ITA | ITALIAN | PI-01-RUS | RUSSIAN |
| PI-01-FRE | FRENCH | PI-01-CHI | CHINESE |
| PI-01-GER | GERMAN | PI-01-JAP | JAPANESE |
| PI-01-POR | PORTUGUESE | PI-01-KOR | KOREAN |

## PI-02

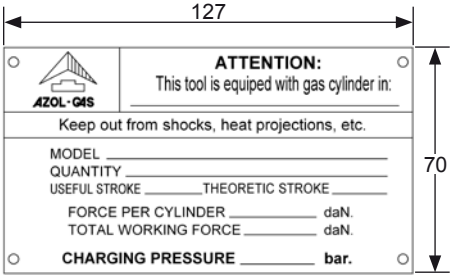


| | |
|---|---|
| ENG | ORDER |
| DEU | BESTELL |
| FRA | COMMANDE |
| ITA | ORDINE |
| ESP | PEDIDO |
| POR | PEDIDO |

PI-02-ENG




| | | | |
|---|---|---|---|
| PI-02-ESP | SPANISH | PI-02-POL | POLISH |
| PI-02-ENG | ENGLISH | PI-02-TUR | TURKISH |
| PI-02-ITA | ITALIAN | PI-02-RUS | RUSSIAN |
| PI-02-FRE | FRENCH | PI-02-CHI | CHINESE |
| PI-02-GER | GERMAN | PI-02-JAP | JAPANESE |
| PI-02-POR | PORTUGUESE | PI-02-KOR | KOREAN |

## PI-11 GM 90.20.09




| | |
|---|---|
| ENG | ORDER |
| DEU | BESTELL |
| FRA | COMMANDE |
| ITA | ORDINE |
| ESP | PEDIDO |
| POR | PEDIDO |

PI-11-ENG




| | | | |
|---|---|---|---|
| PI-11-ESP | SPANISH | PI-11-TUR | TURKISH |
| PI-11-ENG | ENGLISH | PI-11-RUS | RUSSIAN |
| PI-11-GER | GERMAN | PI-11-THA | THAI |
| PI-11-FRE | FRENCH | PI-11-CHI | CHINESE |
| PI-11-POR | PORTUGUESE | PI-11-JAP | JAPANESE |
| PI-11-POL | POLISH | PI-11-KOR | KOREAN |

## PI-12 GM 90.20.08




| | |
|---|---|
| ENG | ORDER |
| DEU | BESTELL |
| FRA | COMMANDE |
| ITA | ORDINE |
| ESP | PEDIDO |
| POR | PEDIDO |

PI-12-ENG




| | | | |
|---|---|---|---|
| PI-12-ESP | SPANISH | PI-12-TUR | TURKISH |
| PI-12-ENG | ENGLISH | PI-12-RUS | RUSSIAN |
| PI-12-GER | GERMAN | PI-12-THA | THAI |
| PI-12-FRE | FRENCH | PI-12-CHI | CHINESE |
| PI-12-POR | PORTUGUESE | PI-12-JAP | JAPANESE |
| PI-12-POL | POLISH | PI-12-KOR | KOREAN |

AZOL GAS

# DIE INFORMATION TAGS

Accessories

## PI-21 GM 90.20.07

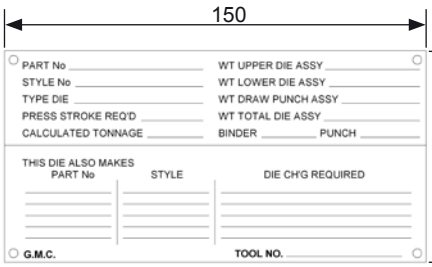


| | |
|---|---|
| ENG | ORDER |
| DEU | BESTELL |
| FRA | COMMANDE |
| ITA | ORDINE |
| ESP | PEDIDO |
| POR | PEDIDO |



PI-21-ENG

| | | | |
|---|---|---|---|
| PI-21-ESP | SPANISH | PI-21-TUR | TURKISH |
| PI-21-ENG | ENGLISH | PI-21-RUS | RUSSIAN |
| PI-21-GER | GERMAN | PI-21-THA | THAI |
| PI-21-FRE | FRENCH | PI-21-CHI | CHINESE |
| PI-21-POR | PORTUGUESE | PI-21-JAP | JAPANESE |
| PI-21-POL | POLISH | PI-21-KOR | KOREAN |

## PI-22 FIAT A0.15.01




| COLORE COLOUR | Pmax. (Mpa) | Pmax. (bar) |
|---|---|---|
| AZZURRO BLUE | 3.75 | 37.5 |
| VERDE GREEN | 7.5 | 75 |
| ROSSO RED | 10.5 | 105 |
| GIALLO YELLOW | 15 | 150 |

| | |
|---|---|
| ENG | ORDER |
| DEU | BESTELL |
| FRA | COMMANDE |
| ITA | ORDINE |
| ESP | PEDIDO |
| POR | PEDIDO |




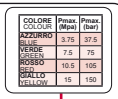

PI-22-ITA GIALLO

| | | | |
|---|---|---|---|
| PI-22-ESP | SPANISH | PI-22-POL | POLISH |
| PI-22-ENG | ENGLISH | PI-22-SER | SERBIAN |
| PI-22-ITA | ITALIAN | PI-22-TUR | TURKISH |
| PI-22-FRE | FRENCH | PI-22-RUS | RUSSIAN |
| PI-22-POR | PORTUGUESE | PI-22-CHI | CHINESE |

## PI-31 EM24.54.700




| | |
|---|---|
| ENG | ORDER |
| DEU | BESTELL |
| FRA | COMMANDE |
| ITA | ORDINE |
| ESP | PEDIDO |
| POR | PEDIDO |



PI-31-FRE

| | | | |
|---|---|---|---|
| PI-31-ESP | SPANISH | PI-31-TUR | TURKISH |
| PI-31-ENG | ENGLISH | PI-31-RUS | RUSSIAN |
| PI-31-FRE | FRENCH | PI-31-CHI | CHINESE |
| PI-31-POR | PORTUGUESE | PI-31-JAP | JAPANESE |
| PI-31-ROM | ROMANIAN | PI-31-KOR | KOREAN |

## PI-32 EM24.54.700

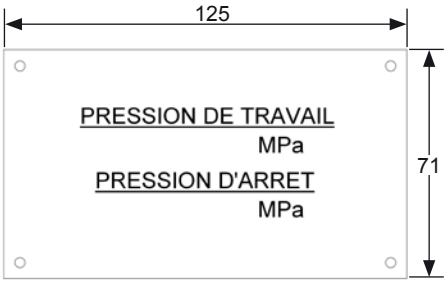


| | |
|---|---|
| ENG | ORDER |
| DEU | BESTELL |
| FRA | COMMANDE |
| ITA | ORDINE |
| ESP | PEDIDO |
| POR | PEDIDO |




PI-32-FRE

| | | | |
|---|---|---|---|
| PI-32-ESP | SPANISH | PI-32-TUR | TURKISH |
| PI-32-ENG | ENGLISH | PI-32-RUS | RUSSIAN |
| PI-32-FRE | FRENCH | PI-32-CHI | CHINESE |
| PI-32-POR | PORTUGUESE | PI-32-JAP | JAPANESE |
| PI-32-ROM | ROMANIAN | PI-32-KOR | KOREAN |

# DIE INFORMATION TAGS

*Accessories*

AZOL GAS

## PI-41 E24.54.815




| | |
|---|---|
| ENG | ORDER |
| DEU | BESTELL |
| FRA | COMMANDE |
| ITA | ORDINE |
| ESP | PEDIDO |
| POR | PEDIDO |




PI-41-FRE

| | |
|---|---|
| PI-41-ESP | SPANISH |
| PI-41-ENG | ENGLISH |
| PI-41-FRE | FRENCH |
| PI-41-POR | PORTUGUESE |
| PI-41-ROM | ROMANIAN |

| | |
|---|---|
| PI-41-TUR | TURKISH |
| PI-41-RUS | RUSSIAN |
| PI-41-CHI | CHINESE |
| PI-41-JAP | JAPANESE |
| PI-41-KOR | KOREAN |

## PI-42 VW 39D 578

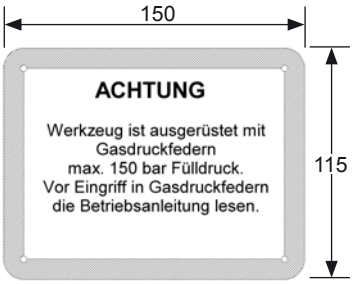


| | |
|---|---|
| ENG | ORDER |
| DEU | BESTELL |
| FRA | COMMANDE |
| ITA | ORDINE |
| ESP | PEDIDO |
| POR | PEDIDO |




PI-42-GER

| | |
|---|---|
| PI-42-ESP | SPANISH |
| PI-42-ENG | ENGLISH |
| PI-42-GER | GERMAN |
| PI-42-POR | PORTUGUESE |
| PI-42-CZE | CZECH |
| PI-42-POL | POLISH |

| | |
|---|---|
| PI-42-SLK | SLOVAK |
| PI-42-HUN | HUNGARIAN |
| PI-42-BOS | BOSNIAN |
| PI-42-RUS | RUSSIAN |
| PI-42-UKR | UKRANIAN |
| PI-42-CHI | CHINESE |

## PI-51 VDI 3003

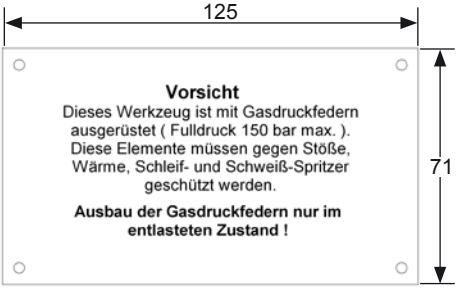


| | |
|---|---|
| ENG | ORDER |
| DEU | BESTELL |
| FRA | COMMANDE |
| ITA | ORDINE |
| ESP | PEDIDO |
| POR | PEDIDO |




PI-51-GER

| | |
|---|---|
| PI-51-ESP | SPANISH |
| PI-51-ENG | ENGLISH |
| PI-51-GER | GERMAN |
| PI-51-POR | PORTUGUESE |
| PI-51-ITA | ITALIAN |
| PI-51-CZE | CZECH |

| | |
|---|---|
| PI-51-POL | POLISH |
| PI-51-SLK | SLOVAK |
| PI-51-HUN | HUNGARIAN |
| PI-51-RUS | RUSSIAN |
| PI-51-CHI | CHINESE |
| PI-51-JAP | JAPANESE |

## PI-52 SMS DKH 321 1n

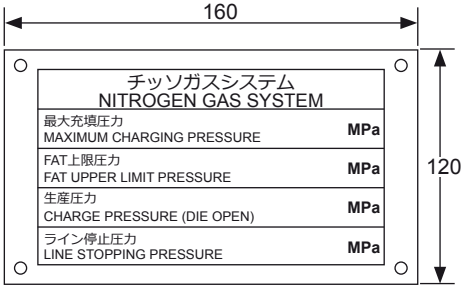


| | |
|---|---|
| ENG | ORDER |
| DEU | BESTELL |
| FRA | COMMANDE |
| ITA | ORDINE |
| ESP | PEDIDO |
| POR | PEDIDO |




PI-52-JAP

| | |
|---|---|
| PI-52-ESP | SPANISH |
| PI-52-JAP | JAPANESE |
| PI-52-ENG | ENGLISH |
| PI-52-POR | PORTUGUESE |
| PI-52-FRE | FRENCH |

| | |
|---|---|
| PI-52-TUR | TURKISH |
| PI-52-RUS | RUSSIAN |
| PI-52-THA | THAI |
| PI-52-INS | INDONESIAN |
| | |

AZOL GAS

# DIE INFORMATION TAGS

Accessories

## PI-53 B2 5707

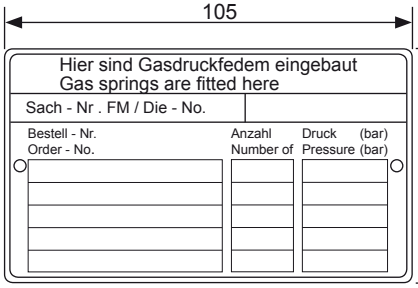


| | |
|---|---|
| ENG | ORDER |
| DEU | BESTELL |
| FRA | COMMANDE |
| ITA | ORDINE |
| ESP | PEDIDO |
| POR | PEDIDO |

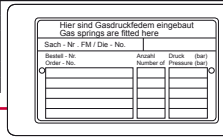


PI-53-GER

| | | | |
|---|---|---|---|
| PI-53-ESP | SPANISH | PI-53-CHI | CHINESE |
| PI-53-GER | GERMAN | PI-53-THA | THAI |
| PI-53-ENG | ENGLISH | PI-53-MAL | MALAYSIAN |
| PI-53-RUS | RUSSIAN | PI-53-INS | INDONESIAN |

## PI-54 B2 5707

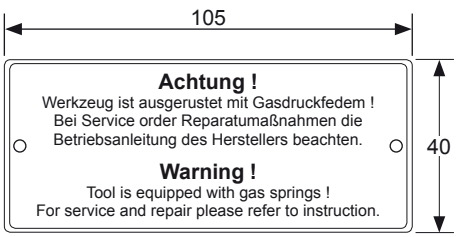


| | |
|---|---|
| ENG | ORDER |
| DEU | BESTELL |
| FRA | COMMANDE |
| ITA | ORDINE |
| ESP | PEDIDO |
| POR | PEDIDO |

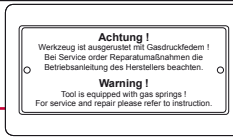


PI-54-GER

| | | | |
|---|---|---|---|
| PI-54-ESP | SPANISH | PI-54-CHI | CHINESE |
| PI-54-GER | GERMAN | PI-54-THA | THAI |
| PI-54-ENG | ENGLISH | PI-54-MAL | MALAYSIAN |
| PI-54-RUS | RUSSIAN | PI-54-INS | INDONESIAN |

## PI-55 WDX20-70-2

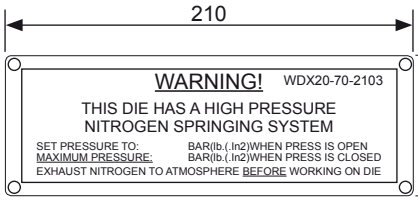


| | |
|---|---|
| ENG | ORDER |
| DEU | BESTELL |
| FRA | COMMANDE |
| ITA | ORDINE |
| ESP | PEDIDO |
| POR | PEDIDO |

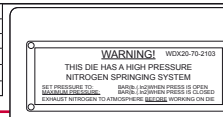


PI-55-ENG

| | | | |
|---|---|---|---|
| PI-55-GER | GERMAN | PI-55-FRE | FRENCH |
| PI-55-DUT | DUTCH | PI-55-TUR | TURKISH |
| PI-55-ENG | ENGLISH | PI-55-RUS | RUSSIAN |
| PI-55-ESP | SPANISH | PI-55-CHI | CHINESE |
| PI-55-POR | PORTUGUESE | PI-55-THA | THAI |
| PI-55-ROM | ROMANIAN | PI-55-MAL | MALAYSIAN |

## PI-56 WDX20-70-35

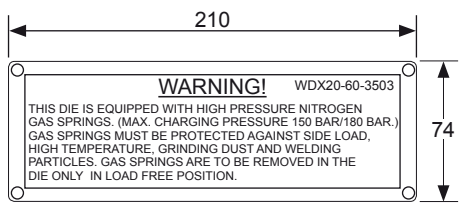


| | |
|---|---|
| ENG | ORDER |
| DEU | BESTELL |
| FRA | COMMANDE |
| ITA | ORDINE |
| ESP | PEDIDO |
| POR | PEDIDO |

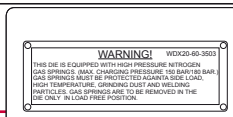


PI-56-ENG

| | | | |
|---|---|---|---|
| PI-56-GER | GERMAN | PI-56-FRE | FRENCH |
| PI-56-DUT | DUTCH | PI-56-TUR | TURKISH |
| PI-56-ENG | ENGLISH | PI-56-RUS | RUSSIAN |
| PI-56-ESP | SPANISH | PI-56-CHI | CHINESE |
| PI-56-POR | PORTUGUESE | PI-56-THA | THAI |
| PI-56-ROM | ROMANIAN | PI-56-MAL | MALAYSIAN |

# ACCSESSORIES

AZOL GAS

## 06 GA 10

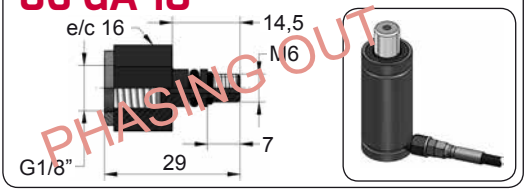


## 06 GA 11

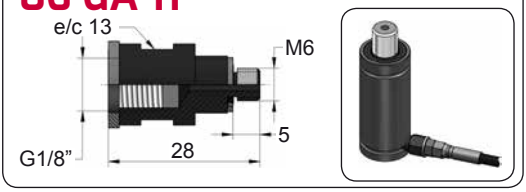


## 08 GA 2

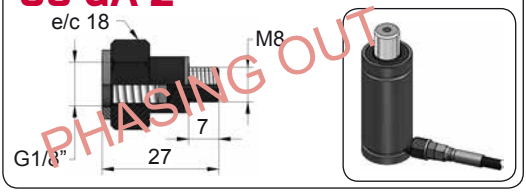


## 18 GA 5

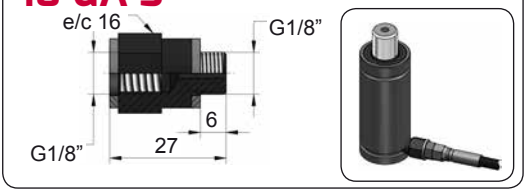


## LM 3

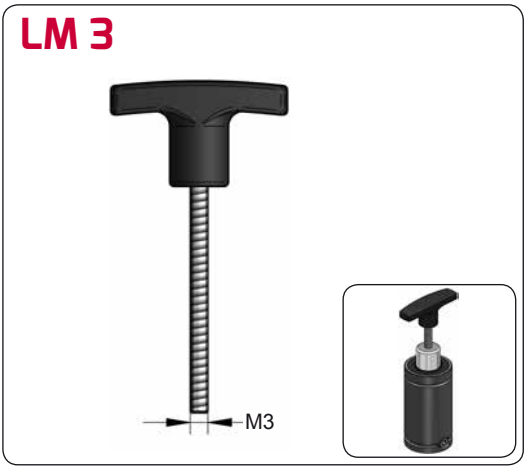


## LM 6

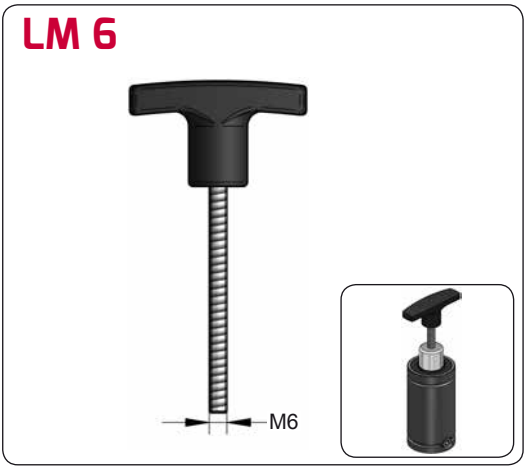


## LM 8

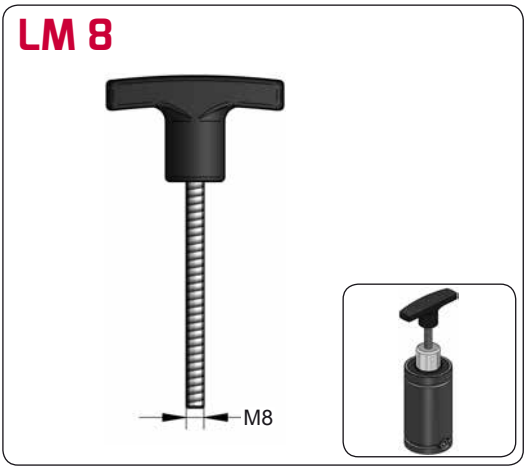


## LM 16



AZOL GAS

# ACCSESSORIES

## DALL 3

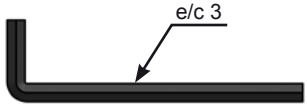




## DALL 5

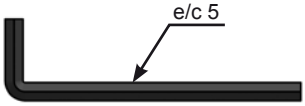




## DPA 5





## T 1/8




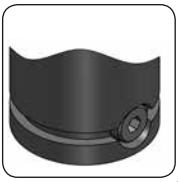

## T M6

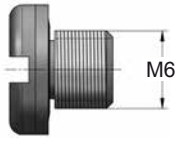


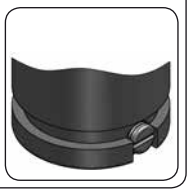

## TR M6

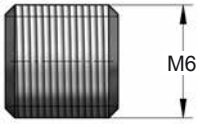




## A 550 1/8-M6






## LRP 1

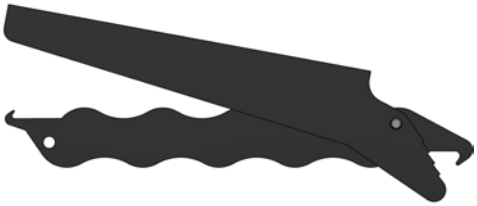



## LRP 2

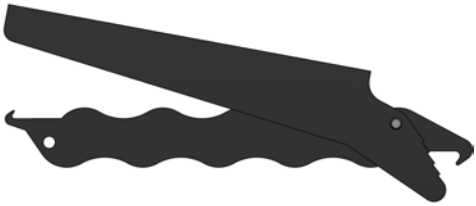



# ACCSESSORIES

AZOL GAS

## DIN 7757






## XTC-M6

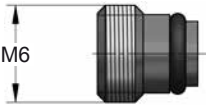




## A 800





## ALXTC







## DMNL





ABXP



XTCP



## DDNM





ABXP



XTCP



AZOL GAS

# ACCSESSORIES

## DBNA

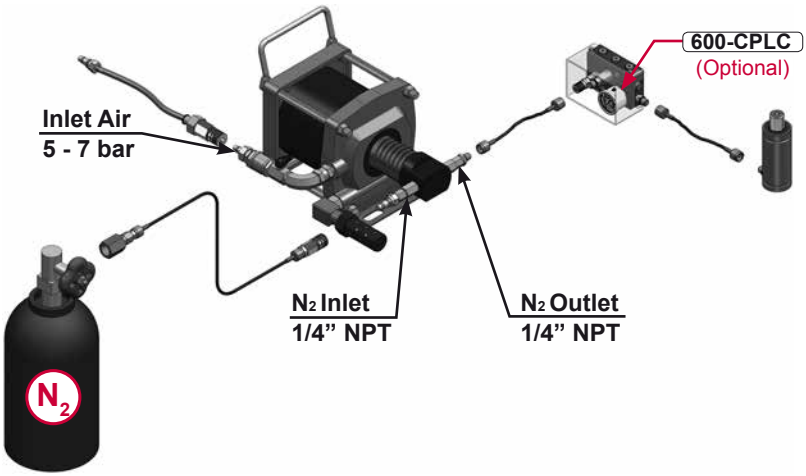


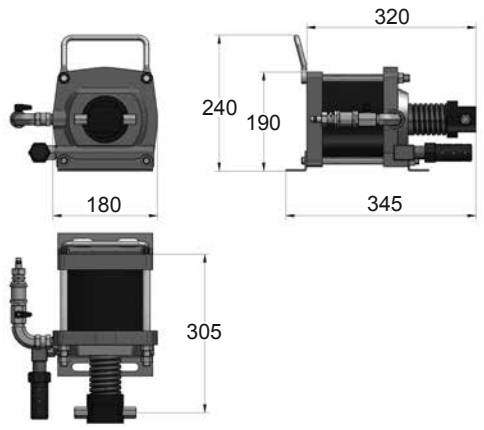


## ADVANTAGES

- Maximum safety.
- Easy boosting.
- Save costs.
- Increases porductivity.

**BOOSTER UNIT**

**DBNA gas booster enables to charge gas springs and manifold systems from your supply tank. The booster is a solution to low pressure supply tank to a minimum of 20 bar (when the tank pressure is lower than the gas springs filling pressure).**

| TECHNICAL DATA | |
|---|---|
| Max. Pressure | 200 bar |
| Pneumatic pressure | 5 - 7 bar |
| Flow | 2.8 l/min |
| Weight | 12 Kg |

# ACCSESSORIES

AZOL GAS

## EC 35

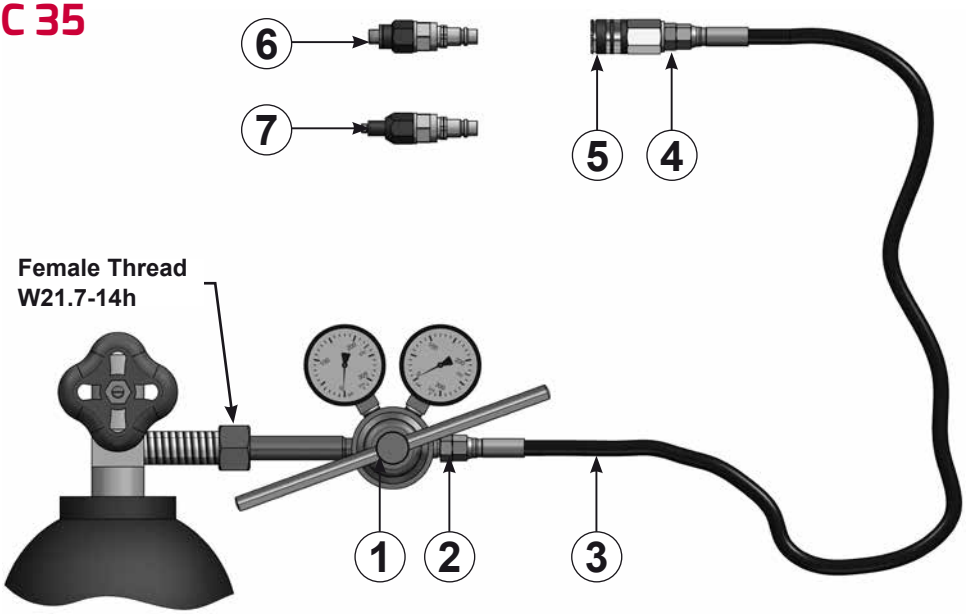


**CHARGING UNIT**

**The Charging Unit EC 35 let you:**

**-Check the pressure from the nitrogen tank.**

**-Charging pressure to self-contained gas springs.**

**-Charging pressure to hosed systems.**

**EC 35 is equipped with:**

**1-Pressure regulator LTH 600**
**2-Adapter 7RT4**
**3-Hose TFRR 3000**
**4-Adapter 7RM2**
**5-Female Quick Coupling QCF 1/4**
**6-Charging adapter 18 HI 4-Q (G1/8")**
**7-Charging adapter 06 HI 8-Q (M6)**

AZOL GAS

# ACCSESSORIES

## LTH 600

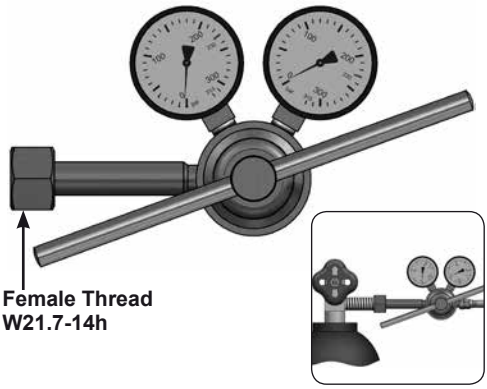


## 18 HI 4-Q




## 06 HI 8-Q






## EC 03

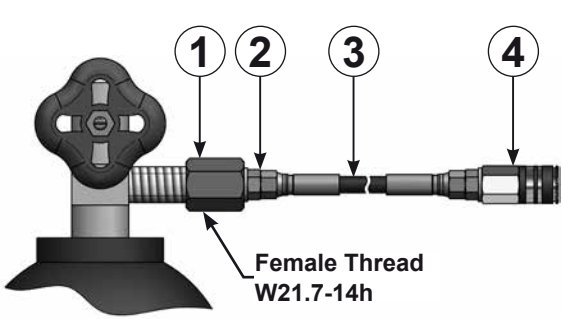


**EC 03 is equipped with:**

1-Adapter **AC 500**
2-Adapter **7RM2**
3-Hose **TFRR 2000**
4-Female Quick Coupling **QCF 1/4**

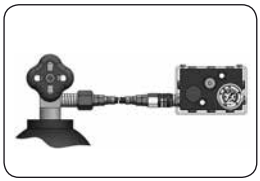

## A 400 C

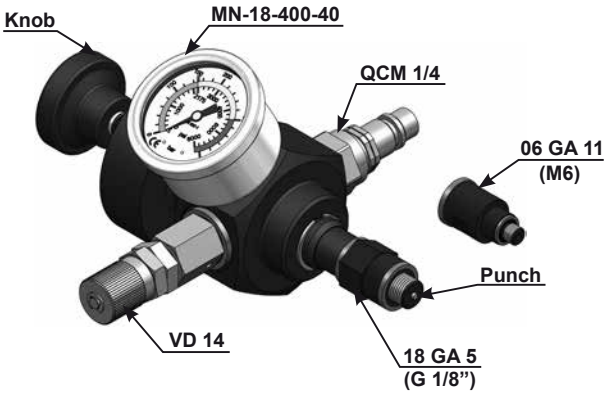


**A400 C let you to check the pressure of the gas springs, modify the pressure if necessary, and fill or drain the pressure as desired.**

**This Filling & Control Unit can be used for all AZOLGAS gas springs.**

| TECHNICAL DATA | |
|---|---|
| Fluid | $N_2$ |
| Max pressure | 210 bar |
| Gauge | 0 - 400 bar |
| Working temperature | 0º - 100ºC |

# NOTES

AZOL GAS

# NOTES

# INDEX

AZOL GAS


| CODE | Page | CODE | Page | CODE | Page | CODE | Page |
|---|---|---|---|---|---|---|---|
| **0-9** | | **A** | | A54-095 | 569 | ALLEN 8 | 676 |
| 06 GA 10 | 760 | A 400 C | 765 | A59-012 | 3 | ALXTC | 762 |
| 06 GA 11 | 760 | A 550 1/8-M6 | 761 | A59-050 | 545 | APF 500 | 78 |
| 06 HI 8-Q | 765 | A 800 | 762 | A59-075 | 561 | APFA 150 | 68 |
| 08 GA 2 | 760 | A14-012 | 3 | A59-095 | 569 | APFA 250 | 72 |
| 18 GA 5 | 760 | A14-015 | 7 | A69-045 | 257 | APFC-H 150 | 70 |
| 18 HI 4-Q | 765 | A14-019 | 11 | A69-063 | 128 | APFC-H 250 | 76 |
| 18 MS 1 | 735 | A14-020 | 13 | A74-045 | 257 | ART 180 | 606 |
| 400-CPAZ | 724 | A14-025 | 15 | A94-050 | 348 | ART 300 | 607 |
| 400-CPLC | 725 | A14-032 | 25 | A94-075 | 354 | ART 500 | 608 |
| 400-CPM6 | 725 | A14-038 | 73 | A94-095 | 360 | ART 750 | 609 |
| 600-CPFI | 721 | A14-045 | 79 | A94-120 | 364 | ART 1200 | 610 |
| 600-CPFO | 721 | A14-050 | 84 | A94-150 | 368 | ART 1500 | 611 |
| 600-CPGM | 723 | A14-063 | 127 | ADCB 120 | 753 | AS 200 | 28 |
| 600-CPLC | 720 | A14-075 | 88 | ADCB 75 | 753 | AS 300 | 30 |
| 600-CPM6 | 722 | A14-095 | 92 | ADCB 95 | 753 | AS 500 | 32 |
| 600-CPMC4 | 722 | A14-105 | 340 | AF V1 | 22 | AS 500 V1 | 34 |
| 600-CPRE | 723 | A14-120 | 96 | AFB V1 | 2 | AS 600 | 36 |
| 600-CPTO | 720 | A14-150 | 100 | AFB V2 | 4 | AS 600 V1 | 38 |
| 7CF7 | 745 | A14-195 | 104 | AFC | 16 | AS 700 | 40 |
| 7CM8 | 744 | A19-038 | 535 | AFC-H 200 | 18 | AS 700 V1 | 42 |
| 7EM8 | 744 | A19-050 | 543 | AFD | 14 | AS 1000 | 44 |
| 7IM7 | 745 | A19-075 | 559 | AFH | 6 | ASP 250 | 46 |
| 7LM8 | 744 | A19-095 | 567 | AFH V1 | 8 | ASP 300 | 48 |
| 7NM7 | 745 | A34-032 | 25 | AFJ | 10 | ASP 500 | 50 |
| 7RM8 | 744 | A34-038 | 73 | AFK V1 | 12 | ASP 500 V1 | 52 |
| 7TF7 | 745 | A34-045 | 79 | AFNA | 20 | AST 200 | 54 |
| 7TL8 | 744 | A34-050 | 84 | AFT | 24 | AST 200 V1 | 56 |
| 7TM7 | 744 | A34-075 | 88 | AG 750 | 82 | AST 250 | 58 |
| 7WF7 | 745 | A34-095 | 92 | AG 1500 | 86 | AST 300 | 60 |
| 7XM7 | 745 | A34-120 | 96 | AG 3000 | 90 | AST 300 V1 | 62 |
| 90 BK | 735 | A34-150 | 100 | AG 5000 | 94 | AST 1000 | 64 |
| 9CF9 | 751 | A34-195 | 104 | AG 7500 | 98 | **B** | |
| 9CM8 | 750 | A39-063 | 127 | AG 10000 | 102 | B13-050 | 382 |
| 9EM8 | 750 | A44-019 | 11 | AGB-H 750 | 83 | B13-075 | 390 |
| 9IM9 | 751 | A44-025 | 15 | AGB-H 1500 | 87 | B13-095 | 394 |
| 9LM8 | 750 | A44-032 | 25 | AGB-H 3000 | 91 | B13-120 | 398 |
| 9RM8 | 750 | A49-015 | 7 | AGB-H 5000 | 95 | B16-095 | 107 |
| 9SR9 | 751 | A49-019 | 11 | AGB-H 7500 | 99 | B16-120 | 107 |
| 9TF9 | 751 | A49-025 | 15 | AGB-H 10000 | 103 | B16-150 | 107 |
| 9TL8 | 750 | A49-050 | 545 | ALLEN 2.5 | 676 | B18-050 | 382 |
| 9TM9 | 750 | A49-075 | 561 | ALLEN 3 | 676 | B18-075 | 390 |
| 9WF9 | 751 | A49-095 | 569 | ALLEN 4 | 676 | B18-095 | 394 |
| 9XM9 | 751 | A54-050 | 545 | ALLEN 5 | 676 | B18-120 | 398 |
| | | A54-075 | 561 | ALLEN 6 | 676 | B21-045 | 80 |

AZOL GAS

# INDEX


| CODE | Page | CODE | Page | CODE | Page | CODE | Page |
|---|---|---|---|---|---|---|---|
| B21-050 | 84 | B61-150 | 368 | C20-095 | 93 | CK 1000 | 260 |
| B21-063 | 270 | B66-075 | 355 | C20-120 | 97 | CK 1000 V1 | 262 |
| B21-075 | 88 | B66-095 | 361 | C20-150 | 101 | CK 1500 V1 | 266 |
| B21-095 | 92 | B66-120 | 365 | C20-195 | 105 | CK 1500 V2 | 268 |
| B21-120 | 96 | B66-150 | 369 | C30-063 | 128 | CK 2500 | 272 |
| B21-150 | 100 | B71-050 | 349 | C35-050 | 264 | CK 2500 V1 | 274 |
| B21-195 | 104 | B71-075 | 355 | C35-063 | 128 | CK 4000 | 278 |
| B23-075 | 390 | B71-095 | 361 | C50-050 | 264 | CK 4000 V1 | 280 |
| B23-095 | 394 | B71-120 | 365 | C55-050 | 297 | CM 1/8 | 731 |
| B23-120 | 398 | B71-150 | 369 | C55-063 | 313 | CM 200 | 152 |
| B28-050 | 382 | B76-038 | 74 | C55-075 | 321 | CM 300 | 154 |
| B28-095 | 394 | B76-045 | 80 | C55-105 | 337 | CM 350 | 156 |
| B28-120 | 398 | B76-050 | 84 | CD 300 V1 | 110 | CM 350 V1 | 158 |
| B31-050 | 601 | B76-063 | 270 | CD 500 V1 | 112 | CM 500 | 160 |
| B31-075 | 603 | B76-075 | 88 | CD 700 | 114 | CM 500 V1 | 162 |
| B31-095 | 605 | B76-095 | 92 | CD 1000 | 118 | CM 600 | 164 |
| B36-045 | 378 | B76-120 | 96 | CD 1000 V1 | 120 | CM 600 V1 | 166 |
| B36-050 | 300 | B76-150 | 100 | CD 1500 | 124 | CM 1000 | 168 |
| B36-063 | 317 | B76-195 | 104 | CD 1500 V1 | 126 | CM 1500 | 172 |
| B36-075 | 324 | B91-050 | 349 | CD 2400 | 130 | CM 2500 | 176 |
| B36-095 | 444 | B91-075 | 355 | CD 4200 | 134 | CM 4000 | 180 |
| B36-105 | 340 | B91-095 | 361 | CD 6600 | 138 | CM 6500 | 184 |
| B36-120 | 448 | B98-050 | 382 | CD 9600 | 142 | CM 10000 | 188 |
| B36-150 | 452 | B98-075 | 390 | CD 18500 | 146 | CP 150 | 478 |
| B36-195 | 460 | B98-095 | 395 | CF 01 24 | 732 | CP 300 | 480 |
| B41-045 | 378 | BK | 734 | CF 01 38 | 732 | CP 500 | 482 |
| B41-050 | 300 | BK G | 734 | CF 01 48 | 732 | CP 1000 | 484 |
| B41-063 | 317 | BKRT | 734 | CF 02 26 | 732 | CP 1000 V1 | 486 |
| B41-075 | 324 | **C** | | CF 02 40 | 732 | CP 2000 | 488 |
| B41-095 | 444 | C05-032 | 71 | CF 02 50 | 732 | CP 2000 V1 | 490 |
| B41-105 | 340 | C05-038 | 74 | CF 03 34 | 733 | CP 3000 | 492 |
| B41-120 | 448 | C05-045 | 80 | CF 03 48 | 733 | CP 3000 V1 | 494 |
| B41-150 | 452 | C05-050 | 85 | CF 03 55 | 733 | CP 5000 | 496 |
| B41-195 | 460 | C05-063 | 128 | CF 04 26 | 733 | CP 5000 V1 | 498 |
| B51-045 | 106 | C05-075 | 89 | CF 04 40 | 733 | CP 8000 | 500 |
| B51-050 | 106 | C05-095 | 93 | CF 04 50 | 733 | CP 8000 V1 | 502 |
| B56-050 | 348 | C05-120 | 97 | CF 05 27 | 733 | CPH 850 | 506 |
| B56-075 | 354 | C05-150 | 101 | CF 05 41 | 733 | CPH 1250 | 508 |
| B56-095 | 360 | C05-195 | 105 | CF 05 48 | 733 | CPH 1700 | 510 |
| B56-120 | 364 | C15-020 | 13 | CK 200 V1 | 246 | CPH 2800 | 512 |
| B56-150 | 368 | C20-032 | 69 | CK 300 V1 | 248 | CPH 4300 | 514 |
| B61-050 | 349 | C20-038 | 74 | CK 570 | 250 | CR 1000 | 464 |
| B61-075 | 354 | C20-045 | 80 | CK 570 V1 | 252 | CR 1500 | 468 |
| B61-095 | 361 | C20-050 | 85 | CK 750 | 254 | CR 2400 | 472 |
| B61-120 | 365 | C20-075 | 89 | CK 750 V1 | 256 | CS 420 | 518 |

# INDEX

AZOL GAS


| CODE | Page | CODE | Page | CODE | Page | CODE | Page |
|---|---|---|---|---|---|---|---|
| CS 420 V1 | 520 | CTC 750 | 296 | D02-045 | 81 | E23-016 | 649 |
| CS 770 V1 | 526 | CTC 1000 | 304 | D02-050 | 85 | E23-024 | 663 |
| CS 770 V2 | 528 | CTC 1500 | 312 | D02-063 | 129 | E23-038 | 31 |
| CS 1000 | 534 | CTC 2500 | 320 | D02-075 | 89 | E33-050 | 601 |
| CS 1000 V1 | 536 | CTC 3000 | 328 | D02-095 | 93 | E33-075 | 603 |
| CS 1800 | 542 | CTC 5000 | 336 | D02-120 | 97 | E33-095 | 605 |
| CS 1800 V1 | 544 | CTN 750 | 298 | D02-150 | 101 | E58-028 | 29 |
| CS 3000 V1 | 550 | CTN 1000 | 306 | D02-195 | 105 | E58-038 | 31 |
| CS 3000 V2 | 552 | CTN 1500 | 314 | D47-050 | 349 | E58-045 | 41 |
| CS 4700 | 558 | CTN 2500 | 322 | D47-075 | 355 | E58-050 | 45 |
| CS 4700 V1 | 560 | CTN 3000 | 330 | D67-032 | 155 | E63-016 | 653 |
| CS 7500 | 566 | CTN 5000 | 338 | D67-038 | 75 | E68-038 | 31 |
| CS 7500 V1 | 568 | CW 170 V1 | 402 | D67-045 | 81 | EC 03 | 765 |
| CS 11800 | 574 | CW 320 V1 | 404 | D67-050 | 85 | EC 35 | 764 |
| CS 11800 V1 | 576 | CW 350 | 406 | D67-063 | 129 | EEX | 695 |
| CS 18300 | 582 | CW 500 | 408 | D67-075 | 89 | EEXS | 699 |
| CS 18300 V1 | 584 | CW 750 | 410 | D67-095 | 93 | EFG 16 | 648 |
| CSE 420 | 522 | CW 1000 V1 | 416 | D67-120 | 97 | EFG 24 | 662 |
| CSE 420 V1 | 524 | CW 1500 | 424 | D67-150 | 101 | EFGC 16 | 650 |
| CSE 770 V1 | 530 | CW 2400 | 430 | D82-050 | 383 | EFGC 24 | 664 |
| CSE 770 V2 | 532 | CW 2400 V1 | 432 | D82-075 | 391 | EFGD 16 | 652 |
| CSE 1000 | 538 | CW 4200 | 440 | DALL 3 | 761 | EFGL 16 | 654 |
| CSE 1000 V1 | 540 | CW 4200 V1 | 442 | DALL 5 | 761 | EFGL 24 | 666 |
| CSE 1800 | 546 | CW 6600 | 446 | DBNA | 763 | EFGQ 16 | 656 |
| CSE 1800 V1 | 548 | CW 9500 | 450 | DCFD | 738 | EFK 24 | 668 |
| CSE 3000 V1 | 554 | CW 11800 | 454 | DCMD | 739 | EFT 16 | 658 |
| CSE 3000 V2 | 556 | CW 20000 | 458 | DDNM | 762 | EFV 16 | 660 |
| CSE 4700 | 562 | CWC 750 V1 | 412 | DFC 75 | 752 | EFV 24 | 670 |
| CSE 4700 V1 | 564 | CWC 1000 V1 | 418 | DFC 95 | 752 | EXDB 90 | 702 |
| CSE 7500 | 570 | CWC 1000 V2 | 420 | DFC 120 | 753 | EXDE 170 | 705 |
| CSE 7500 V1 | 572 | CWC 1500 | 426 | DIMD | 739 | EXDN 90 | 703 |
| CSE 11800 | 578 | CWC 2400 V1 | 434 | DIN 7757 | 762 | EXDT 170 | 704 |
| CSE 11800 V1 | 580 | CWC 2400 V2 | 436 | DLFD | 738 | EXP | 698 |
| CSE 18300 | 586 | CZ 1000 | 344 | DMNL | 762 | EXS | 700 |
| CSE 18300 V1 | 588 | CZ 1000 V1 | 346 | DPA 5 | 761 | EXU | 694 |
| CT 200 V1 | 286 | CZ 2400 | 350 | DRM4 | 738 | EXY | 696 |
| CT 300 V1 | 288 | CZ 2400 V1 | 352 | DRM8 | 738 | **F** | |
| CT 550 | 290 | CZ 4200 | 356 | DTFD | 739 | FD 300 | 216 |
| CT 550 V1 | 292 | CZ 4200 V1 | 358 | DTMD | 739 | FD 500 | 218 |
| CT 750 | 294 | CZ 6600 | 362 | DWFD | 739 | FD 750 | 222 |
| CT 1000 | 302 | CZ 9500 | 366 | DXMD | 739 | FD 750 V1 | 224 |
| CT 1500 | 310 | **D** | | **E** | | FD 1500 V1 | 228 |
| CT 2500 | 318 | D02-025 | 15 | E03-036 | 47 | FD 1500 V2 | 230 |
| CT 3000 | 326 | D02-032 | 25 | E03-045 | 51 | FD 3000 | 234 |
| CT 5000 | 334 | D02-038 | 75 | E08-038 | 49 | FD 5000 | 238 |

AZOL GAS

# INDEX


| CODE | Page | CODE | Page | CODE | Page | CODE | Page |
|---|---|---|---|---|---|---|---|
| FD 5000 V1 | 240 | LP 24 | 674 | MBJX | 684 | PI-41 | 758 |
| **G** | | LP 30 | 674 | MBL | 675 | PI-42 | 758 |
| GF 02 | 731 | LPD 3 | 677 | MBLN | 689 | PI-51 | 758 |
| GF 05 | 741 | LPD 4 | 677 | MBN | 673 | PI-52 | 758 |
| GN 750 | 194 | LPD 5 | 677 | MBP | 673 | PI-53 | 759 |
| GN 1500 | 198 | LPD 6 | 677 | MBR | 672 | PI-54 | 759 |
| GN 3000 | 202 | LPD 8 | 677 | MBSD | 676 | PI-55 | 759 |
| GN 5000 | 206 | LPD 10 | 677 | MBSL | 676 | PI-56 | 759 |
| GN 7500 | 210 | LPD 12 | 677 | MBSN | 689 | PLC M6 | 728 |
| GPT | 731 | LPD 16 | 677 | MBT | 677 | PLD 2 | 728 |
| GRT | 731 | LPD 20 | 677 | MBTH | 677 | PLD 4 | 728 |
| GST | 731 | LPJ 1 | 684 | MBX | 678 | PLD 6 | 729 |
| GTLL | 748 | LPJ 2 | 684 | MBXN | 690 | PLD 7 | 729 |
| GTLL G | 748 | LPJ 3 | 684 | MBZ | 678 | PLD 8 | 729 |
| GTLT | 749 | LPJ 4 | 684 | MCLL | 746 | PLD 10 | 729 |
| GTRL | 748 | LPJ 5 | 684 | MCLT | 747 | PLF 2 | 728 |
| GTRL G | 748 | LPJ 6 | 685 | MCRL | 746 | PLF 4 | 728 |
| GTRR | 748 | LPS 16 | 673 | MCRR | 746 | PLF 8 | 729 |
| GTRR G | 748 | LPS 22 | 673 | MCRT | 747 | PLH 1/8 | 728 |
| GTRT | 749 | LPS 24 | 677 | MN-14-600-40 | 727 | PLH M6 | 728 |
| **K** | | LPT 10 | 649 | MN-14-600-62 | 727 | PLK 8 | 729 |
| KCMK | 735 | LPT 17 | 663 | MN-18-400-40 | 726 | PLR M6 | 728 |
| KRM6 | 735 | LPV 8-9 | 679 | MPHJ | 688 | PME | 706 |
| KRM8 | 735 | LPV 10-11 | 680 | MPLJ | 687 | **Q** | |
| KRMK | 735 | LPV 16-17 | 661 | MPNH | 692 | QCF 1/4 | 726 |
| KTMK | 735 | LPV 25-28 | 669 | MPNL | 691 | QCM 1/4 | 726 |
| KZ 350 | 372 | LRP 1 | 761 | MPNS | 691 | QDF 1/8 | 726 |
| KZ 500 | 374 | LRP 2 | 761 | MPSJ | 687 | QDM 1/8 | 726 |
| KZ 750 | 376 | LTH 600 | 765 | MPXJ | 688 | **R** | |
| KZ 1000 | 380 | **M** | | **P** | | RBP 5 | 731 |
| KZ 1500 | 384 | MBD | 674 | PGE | 706 | RBP 10 | 741 |
| KZ 2400 | 388 | MBFP | 679 | PGH | 707 | RGR | 731 |
| KZ 4200 | 392 | MBHC | 682 | PGN | 707 | RGR G | 731 |
| KZ 6600 | 396 | MBHF | 682 | PGP | 731 | RGS | 730 |
| **L** | | MBHG | 683 | PGP G | 731 | RGS G | 730 |
| LM3 | 760 | MBHN | 690 | PGS | 730 | ROB 750 | 592 |
| LM6 | 760 | MBHR | 679 | PGS G | 730 | ROB 1500 | 594 |
| LM8 | 760 | MBHS | 683 | PI-01 | 756 | ROB 3000 | 596 |
| LM16 | 760 | MBHW | 681 | PI-02 | 756 | ROB 5000 | 598 |
| LP 5 | 674 | MBHX | 680 | PI-11 | 756 | ROT 750 | 593 |
| LP 6 | 674 | MBHY | 680 | PI-12 | 756 | ROT 1500 | 595 |
| LP 8 | 674 | MBHZ | 681 | PI-21 | 757 | ROT 3000 | 597 |
| LP 10 | 672 | MBJH | 686 | PI-22 | 757 | ROT 5000 | 599 |
| LP 12 | 674 | MBJL | 685 | PI-31 | 757 | | |
| LP 16 | 672 | MBJS | 684 | PI-32 | 757 | | |

# INDEX

AZOL GAS


| CODE | Page | CODE | Page | CODE | Page | CODE | Page |
|---|---|---|---|---|---|---|---|
| **S** | | VAM 5000 | 630 | | | | |
| SGS | 730 | VAM 7500 | 634 | | | | |
| SGS G | 730 | VD 14 | 726 | | | | |
| SKK 12R 1/4 | 732 | VH 500 | 600 | | | | |
| SKK 12R 1/8 | 732 | VH 1200 | 602 | | | | |
| SKK L | 732 | VH 2200 | 604 | | | | |
| SMRR | 742 | VMD 3000 | 640 | | | | |
| SMRR G | 742 | VMD 5000 | 642 | | | | |
| SMRT | 743 | VMD 7500 | 644 | | | | |
| SP-ER 3 | 710 | **X** | | | | | |
| SP-ER 5 | 711 | XTC-M6 | 762 | | | | |
| SP-ER 7 | 712 | | | | | | |
| SP-ER 9 | 713 | | | | | | |
| SPFI | 754 | | | | | | |
| SPPS | 755 | | | | | | |
| SPRE | 755 | | | | | | |
| SPS 1/4 | 727 | | | | | | |
| SPS 1/8 | 727 | | | | | | |
| SPVD | 754 | | | | | | |
| **T** | | | | | | | |
| T 1/8 | 761 | | | | | | |
| T M6 | 761 | | | | | | |
| TE BK | 735 | | | | | | |
| TFLL | 740 | | | | | | |
| TFLT | 741 | | | | | | |
| TFRL | 740 | | | | | | |
| TFRR | 740 | | | | | | |
| TFRT | 741 | | | | | | |
| TNCC | 737 | | | | | | |
| TNCT | 738 | | | | | | |
| TNLC | 737 | | | | | | |
| TNLL | 736 | | | | | | |
| TNLT | 738 | | | | | | |
| TNRC | 737 | | | | | | |
| TNRL | 736 | | | | | | |
| TNRR | 736 | | | | | | |
| TNRT | 738 | | | | | | |
| TR M6 | 761 | | | | | | |
| **U** | | | | | | | |
| UEX | 695 | | | | | | |
| **V** | | | | | | | |
| VAM 300 V1 | 614 | | | | | | |
| VAM 750 | 618 | | | | | | |
| VAM 1500 | 622 | | | | | | |
| VAM 3000 | 626 | | | | | | |

AZOL GAS

# INDEX


| CODE | Page | CODE | Page | CODE | Page | CODE | Page |
|---|---|---|---|---|---|---|---|
| | | | | | | | |
| | | | | | | | |
| | | | | | | | |

# DIAMETER INDEX

AZOL GAS


| Ø | MODEL | Page |
|---|---|---|
| 12 | AFB 13 V2 | 4 |
| | AFB 25 V2 | 4 |
| | AFB 38 V2 | 4 |
| | AFB 50 V2 | 4 |
| 15 | AFH 18 V1 | 8 |
| | AFH 35 V1 | 8 |
| | AFH 50 V1 | 8 |
| | AFH 70 V1 | 8 |
| 19 | AFJ 30 | 10 |
| | AFJ 50 | 10 |
| | AFJ 70 | 10 |
| | AFJ 90 | 10 |
| | CP 150 | 478 |
| | CW 170 V1 | 402 |
| 20 | AFK 25 V1 | 12 |
| | AFK 50 V1 | 12 |
| | AFK 75 V1 | 12 |
| | AFK 100 V1 | 12 |
| 25 | AF 50 V1 | 22 |
| | AF 100 V1 | 22 |
| | AF 150 V1 | 22 |
| | AF 200 V1 | 22 |
| | AFC 50 | 16 |
| | AFC 100 | 16 |
| | AFC 150 | 16 |
| | AFC 200 | 16 |
| | AFC-H 200 | 18 |
| | AFNA 50 | 20 |
| | AFNA 100 | 20 |
| | AFNA 150 | 20 |
| | AFNA 200 | 20 |
| | AST 200 V1 | 56 |
| | CK 200 V1 | 246 |
| | CM 200 | 152 |
| | CP 300 | 480 |
| | CS 420 V1 | 520 |
| | CSE 420 V1 | 524 |
| | CT 200 V1 | 286 |
| | CW 320 V1 | 404 |
| M28 x 1.5 | AS 50 | 28 |
| | AS 100 | 28 |
| | AS 150 | 28 |
| | AS 200 | 28 |
| 32 | AFT 80 | 24 |
| | AFT 160 | 24 |

| Ø | MODEL | Page |
|---|---|---|
| 32 | AFT 240 | 24 |
| | AFT 310 | 24 |
| | APFA 50 | 68 |
| | APFA 100 | 68 |
| | APFA 150 | 68 |
| | APFA 200 | 68 |
| | APFC-H 150 | 70 |
| | AST 300 V1 | 62 |
| | CD 300 V1 | 110 |
| | CK 300 V1 | 248 |
| | CM 300 | 154 |
| | CM 350 V1 | 158 |
| | CP 500 | 482 |
| | CS 770 V2 | 528 |
| | CSE 770 V2 | 532 |
| | CT 300 V1 | 288 |
| | CW 350 | 406 |
| | KZ 350 | 372 |
| M36 x 1 | ASP 250 | 46 |
| 38 | APFA 250 | 72 |
| | APFC-H 250 | 76 |
| | AST 250 | 58 |
| | CD 500 V1 | 112 |
| | CK 570 V1 | 252 |
| | CM 500 V1 | 162 |
| | CP 1000 V1 | 486 |
| | CPH 850 | 506 |
| | CS 1000 V1 | 536 |
| | CSE 1000 V1 | 540 |
| | CT 550 V1 | 292 |
| | CW 500 | 408 |
| | FD 300 | 216 |
| | KZ 500 | 374 |
| M38 x 1.5 | AS 300 | 30 |
| | AS 500 V1 | 34 |
| | AS 600 V1 | 38 |
| | ASP 300 | 48 |
| 45 | APF 500 | 78 |
| | CD 700 | 114 |
| | CK 750 V1 | 256 |
| | CM 600 V1 | 166 |
| | CPH 1250 | 508 |
| | CW 750 | 410 |
| | CWC 750 V1 | 412 |
| | FD 500 | 218 |

| Ø | MODEL | Page |
|---|---|---|
| 45 | KZ 750 | 376 |
| | VAM 300 V1 | 614 |
| M45 x 1 | ASP 500 V1 | 52 |
| M45 x 1.5 | AS 700 V1 | 42 |
| 50 | AG 750 | 82 |
| | AGB-H 750 | 83 |
| | AST 1000 | 64 |
| | CD 1000 V1 | 120 |
| | CK 1000 V1 | 262 |
| | CM 1000 | 168 |
| | CP 2000 V1 | 490 |
| | CPH 1700 | 510 |
| | CS 1800 V1 | 544 |
| | CSE 1800 V1 | 548 |
| | CT 750 | 294 |
| | CT 1000 | 302 |
| | CTN 750 | 298 |
| | CTN 1000 | 306 |
| | CW 1000 V1 | 416 |
| | CWC 1000 V2 | 420 |
| | FD 750 V1 | 224 |
| | GN 750 | 194 |
| | KZ 1000 | 380 |
| | ROB 750 | 592 |
| | ROT 750 | 593 |
| M50 x 1.5 | AS 1000 | 44 |
| 63 | CD 1500 V1 | 126 |
| | CK 1500 V2 | 268 |
| | CM 1500 | 172 |
| | CP 3000 V1 | 494 |
| | CPH 2800 | 512 |
| | CS 3000 V2 | 552 |
| | CSE 3000 V2 | 556 |
| | CT 1500 | 310 |
| | CTN 1500 | 314 |
| | CW 1500 | 424 |
| | CWC 1500 | 426 |
| | KZ 1500 | 384 |
| 75 | AG 1500 | 86 |
| | AGB-H 1500 | 87 |
| | CD 2400 | 130 |
| | CK 2500 V1 | 274 |
| | CM 2500 | 176 |
| | CP 5000 V1 | 498 |
| | CPH 4300 | 514 |

AZOL GAS

# DIAMETER INDEX


| Ø | MODEL | Page |
|---|---|---|
| 75 | CS 4700 V1 | 560 |
| | CSE 4700 V1 | 564 |
| | CT 2500 | 318 |
| | CT 3000 | 326 |
| | CTN 2500 | 322 |
| | CTN 3000 | 330 |
| | CW 2400 V1 | 432 |
| | CWC 2400 V2 | 436 |
| | FD 1500 V2 | 230 |
| | GN 1500 | 198 |
| | KZ 2400 | 388 |
| | ROB 1500 | 594 |
| | ROT 1500 | 595 |
| | VAM 750 | 618 |
| 95 | AG 3000 | 90 |
| | AGB-H 3000 | 91 |
| | CD 4200 | 134 |
| | CK 4000 V1 | 280 |
| | CM 4000 | 180 |
| | CP 8000 V1 | 502 |
| | CS 7500 V1 | 568 |
| | CSE 7500 V1 | 572 |
| | CW 4200 V1 | 442 |
| | FD 3000 | 234 |
| | GN 3000 | 202 |
| | KZ 4200 | 392 |
| | ROB 3000 | 596 |
| | ROT 3000 | 597 |
| | VAM 1500 | 622 |
| | VMD 3000 | 640 |
| 105 | CT 5000 | 334 |
| | CTN 5000 | 338 |
| 120 | AG 5000 | 94 |
| | AGB-H 5000 | 95 |
| | CD 6600 | 138 |
| | CM 6500 | 184 |
| | CS 11800 V1 | 576 |
| | CSE 11800 V1 | 580 |
| | CW 6600 | 446 |
| | FD 5000 V1 | 240 |
| | GN 5000 | 206 |
| | KZ 6600 | 396 |
| | ROB 5000 | 598 |
| | ROT 5000 | 599 |
| | VAM 3000 | 626 |

| Ø | MODEL | Page |
|---|---|---|
| 120 | VMD 5000 | 642 |
| 150 | AG 7500 | 98 |
| | AGB-H 7500 | 99 |
| | CD 9600 | 142 |
| | CM 10000 | 188 |
| | CS 18300 V1 | 584 |
| | CSE 18300 V1 | 588 |
| | CW 11800 | 454 |
| | CW 9500 | 450 |
| | GN 7500 | 210 |
| | VAM 5000 | 630 |
| | VMD 7500 | 644 |
| 195 | AG 10000 | 102 |
| | AGB-H 10000 | 103 |
| | CD 18500 | 146 |
| | CW 20000 | 458 |
| | VAM 7500 | 634 |

# FORCE INDEX

AZOL GAS

| $F_0$ (daN) | MODEL | Page |
|---|---|---|
| 13 | AFB 13 V2 | 4 |
| 18 | AFH 18 V1 | 8 |
| 25 | AFB 25 V2 | 4 |
| | AFK 25 V1 | 12 |
| 30 | AFJ 30 | 10 |
| 35 | AFH 35 V1 | 8 |
| 38 | AFB 38 V2 | 4 |
| 50 | AF 50 V1 | 22 |
| | AFB 50 V2 | 4 |
| | AFC 50 | 16 |
| | AFH 50 V1 | 8 |
| | AFJ 50 | 10 |
| | AFK 50 V1 | 12 |
| | AFNA 50 | 20 |
| | APFA 50 | 68 |
| | AS 50 | 28 |
| 70 | AFH 70 V1 | 8 |
| | AFJ 70 | 10 |
| 75 | AFK 75 V1 | 12 |
| 80 | AFT 80 | 24 |
| 90 | AFJ 90 | 10 |
| 100 | AF 100 V1 | 22 |
| | AFC 100 | 16 |
| | AFK 100 V1 | 12 |
| | AFNA 100 | 20 |
| | APFA 100 | 68 |
| | AS 100 | 28 |
| 150 | AF 150 V1 | 22 |
| | AFC 150 | 16 |
| | AFNA 150 | 20 |
| | APFA 150 | 68 |
| | APFC-H 150 | 70 |
| | AS 150 | 28 |
| | CP 150 | 478 |
| 160 | AFT 160 | 24 |
| 170 | CW 170 V1 | 402 |
| 200 | AF 200 V1 | 22 |
| | AFC 200 | 16 |
| | AFC-H 200 | 18 |
| | AFNA 200 | 20 |
| | APFA 200 | 68 |
| | AS 200 | 28 |
| | AST 200 V1 | 56 |
| | CK 200 V1 | 246 |
| | CM 200 | 152 |

| $F_0$ (daN) | MODEL | Page |
|---|---|---|
| 200 | CT 200 V1 | 286 |
| 240 | AFT 240 | 24 |
| 250 | APFA 250 | 72 |
| | APFC-H 250 | 76 |
| | ASP 250 | 46 |
| | AST 250 | 58 |
| 300 | AS 300 | 30 |
| | ASP 300 | 48 |
| | AST 300 V1 | 62 |
| | CD 300 V1 | 110 |
| | CK 300 V1 | 248 |
| | CM 300 | 154 |
| | CP 300 | 480 |
| | CT 300 V1 | 288 |
| | FD 300 | 216 |
| | VAM 300 V1 | 614 |
| 310 | AFT 310 | 24 |
| 320 | CW 320 V1 | 404 |
| 350 | CM 350 V1 | 158 |
| | CW 350 | 406 |
| | KZ 350 | 372 |
| 420 | CS 420 V1 | 520 |
| | CSE 420 V1 | 524 |
| 500 | APF 500 | 78 |
| | AS 500 V1 | 34 |
| | ASP 500 V1 | 52 |
| | CD 500 V1 | 112 |
| | CM 500 V1 | 162 |
| | CP 500 | 482 |
| | CW 500 | 408 |
| | FD 500 | 218 |
| | KZ 500 | 374 |
| 550 | CT 550 V1 | 292 |
| 570 | CK 570 V1 | 252 |
| 600 | CM 600 V1 | 166 |
| | AS 600 V1 | 38 |
| 700 | AS 700 V1 | 42 |
| | CD 700 | 114 |
| 750 | AG 750 | 82 |
| | AGB-H 750 | 83 |
| | CK 750 V1 | 256 |
| | CT 750 | 294 |
| | CTN 750 | 298 |
| | CW 750 | 410 |
| | CWC 750 V1 | 412 |

| $F_0$ (daN) | MODEL | Page |
|---|---|---|
| 750 | FD 750 V1 | 224 |
| | GN 750 | 194 |
| | KZ 750 | 376 |
| | ROB 750 | 592 |
| | ROT 750 | 593 |
| | VAM 750 | 618 |
| 770 | CS 770 V2 | 528 |
| | CSE 770 V2 | 532 |
| 850 | CPH 850 | 506 |
| 1000 | AS 1000 | 44 |
| | AST 1000 | 64 |
| | CD 1000 V1 | 120 |
| | CK 1000 V1 | 262 |
| | CM 1000 | 168 |
| | CP 1000 V1 | 486 |
| | CS 1000 V1 | 536 |
| | CSE 1000 V1 | 540 |
| | CT 1000 | 302 |
| | CTN 1000 | 306 |
| | CW 1000 V1 | 416 |
| | CWC 1000 V2 | 420 |
| | KZ 1000 | 380 |
| 1250 | CPH 1250 | 508 |
| 1500 | AG 1500 | 86 |
| | AGB-H 1500 | 87 |
| | CD 1500 V1 | 126 |
| | CK 1500 V2 | 268 |
| | CM 1500 | 172 |
| | CT 1500 | 310 |
| | CTN 1500 | 314 |
| | CW 1500 | 424 |
| | CWC 1500 | 426 |
| | FD 1500 V2 | 230 |
| | GN 1500 | 198 |
| | KZ 1500 | 384 |
| | ROB 1500 | 594 |
| | ROT 1500 | 595 |
| | VAM 1500 | 622 |
| 1700 | CPH 1700 | 510 |
| 1800 | CS 1800 V1 | 544 |
| | CSE 1800 V1 | 548 |
| 2000 | CP 2000 V1 | 490 |
| 2400 | CD 2400 | 130 |
| | CW 2400 V1 | 432 |
| | CWC 2400 V2 | 436 |

AZOL GAS

# FORCE INDEX


| $F_0$ (daN) | MODEL | Page |
|---|---|---|
| 2400 | KZ 2400 | 388 |
| 2500 | CK 2500 V1 | 274 |
| | CM 2500 | 176 |
| | CT 2500 | 318 |
| | CTN 2500 | 322 |
| 2800 | CPH 2800 | 512 |
| 3000 | AG 3000 | 90 |
| | AGB-H 3000 | 91 |
| | CP 3000 V1 | 494 |
| | CS 3000 V2 | 552 |
| | CSE 3000 V2 | 556 |
| | CT 3000 | 326 |
| | CTN 3000 | 330 |
| | FD 3000 | 234 |
| | GN 3000 | 202 |
| | ROB 3000 | 596 |
| | ROT 3000 | 597 |
| | VAM 3000 | 626 |
| | VMD 3000 | 640 |
| 4000 | CK 4000 V1 | 280 |
| | CM 4000 | 180 |
| 4200 | CD 4200 | 134 |
| | CW 4200 V1 | 442 |
| | KZ 4200 | 392 |
| 4300 | CPH 4300 | 514 |
| 4700 | CS 4700 V1 | 560 |
| | CSE 4700 V1 | 564 |
| 5000 | AG 5000 | 94 |
| | AGB-H 5000 | 95 |
| | CP 5000 V1 | 498 |
| | CT 5000 | 334 |
| | CTN 5000 | 338 |
| | FD 5000 V1 | 240 |
| | GN 5000 | 206 |
| | ROB 5000 | 598 |
| | ROT 5000 | 599 |
| | VAM 5000 | 630 |
| | VMD 5000 | 642 |
| 6500 | CM 6500 | 184 |
| 6600 | CD 6600 | 138 |
| | CW 6600 | 446 |
| | KZ 6600 | 396 |
| 7500 | AG 7500 | 98 |
| | AGB-H 7500 | 99 |
| | CS 7500 V1 | 568 |
| 7500 | CSE 7500 V1 | 572 |
| | GN 7500 | 210 |
| | VAM 7500 | 634 |
| | VMD 7500 | 644 |
| 8000 | CP 8000 V1 | 502 |
| 9500 | CD 9600 | 142 |
| | CW 9500 | 450 |
| 10000 | AG 10000 | 102 |
| | AGB-H 10000 | 103 |
| | CM 10000 | 188 |
| 11800 | CS 11800 V1 | 576 |
| | CSE 11800 V1 | 580 |
| | CW 11800 | 454 |
| 18300 | CS 18300 V1 | 584 |
| | CSE 18300 V1 | 588 |
| 18500 | CD 18500 | 146 |
| 20000 | CW 20000 | 458 |

| $F_0$ (daN) | MODEL | Page |
|---|---|---|

# FLANGE INDEX

AZOL GAS


| MODEL | FLANGE | Page |
|---|---|---|
| A14 | A14-012 | 3 |
| | A14-015 | 7 |
| | A14-019 | 11 |
| | A14-020 | 13 |
| | A14-025 | 15 |
| | A14-032 | 25 |
| | A14-038 | 73 |
| | A14-045 | 79 |
| | A14-050 | 84 |
| | A14-063 | 127 |
| | A14-075 | 88 |
| | A14-095 | 92 |
| | A14-105 | 340 |
| | A14-120 | 96 |
| | A14-150 | 100 |
| | A14-195 | 104 |
| A19 | A19-038 | 535 |
| | A19-050 | 543 |
| | A19-075 | 559 |
| | A19-095 | 567 |
| A34 | A34-032 | 25 |
| | A34-038 | 73 |
| | A34-045 | 79 |
| | A34-050 | 84 |
| | A34-075 | 88 |
| | A34-095 | 92 |
| | A34-120 | 96 |
| | A34-150 | 100 |
| | A34-195 | 104 |
| A39 | A39-063 | 127 |
| A44 | A44-019 | 11 |
| | A44-025 | 15 |
| | A44-032 | 25 |
| A49 | A49-015 | 7 |
| | A49-019 | 11 |
| | A49-025 | 15 |
| | A49-050 | 545 |
| | A49-075 | 561 |
| | A49-095 | 569 |
| A54 | A54-050 | 545 |
| | A54-075 | 561 |
| | A54-095 | 569 |
| A59 | A59-012 | 3 |
| | A59-050 | 545 |
| | A59-075 | 561 |
| A59 | A59-095 | 569 |
| A69 | A69-045 | 257 |
| | A69-063 | 128 |
| A74 | A74-045 | 257 |
| A94 | A94-050 | 348 |
| | A94-075 | 354 |
| | A94-095 | 360 |
| | A94-120 | 364 |
| | A94-150 | 368 |
| B13 | B13-050 | 382 |
| | B13-075 | 390 |
| | B13-095 | 394 |
| | B13-120 | 398 |
| B16 | B16-095 | 107 |
| | B16-120 | 107 |
| | B16-150 | 107 |
| B18 | B18-050 | 382 |
| | B18-075 | 390 |
| | B18-095 | 394 |
| | B18-120 | 398 |
| B21 | B21-045 | 80 |
| | B21-050 | 84 |
| | B21-063 | 270 |
| | B21-075 | 88 |
| | B21-095 | 92 |
| | B21-120 | 96 |
| | B21-150 | 100 |
| | B21-195 | 104 |
| B23 | B23-075 | 390 |
| | B23-095 | 394 |
| | B23-120 | 398 |
| B28 | B28-050 | 382 |
| | B28-095 | 394 |
| | B28-120 | 398 |
| B31 | B31-050 | 601 |
| | B31-075 | 603 |
| | B31-095 | 605 |
| B36 | B36-045 | 378 |
| | B36-050 | 300 |
| | B36-063 | 317 |
| | B36-075 | 324 |
| | B36-095 | 444 |
| | B36-105 | 340 |
| | B36-120 | 448 |
| | B36-150 | 452 |
| B36 | B36-195 | 460 |
| B41 | B41-045 | 378 |
| | B41-050 | 300 |
| | B41-063 | 317 |
| | B41-075 | 324 |
| | B41-095 | 444 |
| | B41-105 | 340 |
| | B41-120 | 448 |
| | B41-150 | 452 |
| | B41-195 | 460 |
| B51 | B51-045 | 106 |
| | B51-050 | 106 |
| B56 | B56-050 | 348 |
| | B56-075 | 354 |
| | B56-095 | 360 |
| | B56-120 | 364 |
| | B56-150 | 368 |
| B61 | B61-050 | 349 |
| | B61-075 | 354 |
| | B61-095 | 361 |
| | B61-120 | 365 |
| | B61-150 | 368 |
| B66 | B66-075 | 355 |
| | B66-095 | 361 |
| | B66-120 | 365 |
| | B66-150 | 369 |
| B71 | B71-050 | 349 |
| | B71-075 | 355 |
| | B71-095 | 361 |
| | B71-120 | 365 |
| | B71-150 | 369 |
| B76 | B76-038 | 74 |
| | B76-045 | 80 |
| | B76-050 | 84 |
| | B76-063 | 270 |
| | B76-075 | 88 |
| | B76-095 | 92 |
| | B76-120 | 96 |
| | B76-150 | 100 |
| | B76-195 | 104 |
| B91 | B91-050 | 349 |
| | B91-075 | 355 |
| | B91-095 | 361 |
| B98 | B98-050 | 382 |
| | B98-075 | 390 |

AZOL GAS

# FLANGE INDEX


| MODEL | FLANGE | Page |
|---|---|---|
| B98 | B98-095 | 395 |
| C05 | C05-032 | 71 |
| | C05-038 | 74 |
| | C05-045 | 80 |
| | C05-050 | 85 |
| | C05-063 | 128 |
| | C05-075 | 89 |
| | C05-095 | 93 |
| | C05-120 | 97 |
| | C05-150 | 101 |
| | C05-195 | 105 |
| C15 | C15-020 | 13 |
| C20 | C20-032 | 69 |
| | C20-038 | 74 |
| | C20-045 | 80 |
| | C20-050 | 85 |
| | C20-075 | 89 |
| | C20-095 | 93 |
| | C20-120 | 97 |
| | C20-150 | 101 |
| | C20-195 | 105 |
| C30 | C30-063 | 128 |
| C35 | C35-050 | 264 |
| | C35-063 | 128 |
| C50 | C50-050 | 264 |
| C55 | C55-050 | 297 |
| | C55-063 | 313 |
| | C55-075 | 321 |
| | C55-105 | 337 |
| D02 | D02-025 | 15 |
| | D02-032 | 25 |
| | D02-038 | 75 |
| | D02-045 | 81 |
| | D02-050 | 85 |
| | D02-063 | 129 |
| | D02-075 | 89 |
| | D02-095 | 93 |
| | D02-120 | 97 |
| | D02-150 | 101 |
| | D02-195 | 105 |
| D47 | D47-050 | 349 |
| | D47-075 | 355 |
| D67 | D67-032 | 155 |
| | D67-038 | 75 |
| | D67-045 | 81 |
| D67 | D67-050 | 85 |
| | D67-063 | 129 |
| | D67-075 | 89 |
| | D67-095 | 93 |
| | D67-120 | 97 |
| | D67-150 | 101 |
| D82 | D82-050 | 383 |
| | D82-075 | 391 |
| E03 | E03-036 | 47 |
| | E03-045 | 51 |
| E08 | E08-038 | 49 |
| E23 | E23-016 | 649 |
| | E23-024 | 663 |
| | E23-038 | 31 |
| E33 | E33-050 | 601 |
| | E33-075 | 603 |
| | E33-095 | 605 |
| E58 | E58-028 | 29 |
| | E58-038 | 31 |
| | E58-045 | 41 |
| | E58-050 | 45 |
| E63 | E63-016 | 653 |
| E68 | E68-038 | 31 |

# FLANGE INDEX

AZOL GAS

| Ø | FLANGE | Page |
|---|---|---|
| 12 | A14-012 | 3 |
| | A59-012 | 3 |
| 15 | A14-015 | 7 |
| | A49-015 | 7 |
| M16x1.5 | E23-016 | 649 |
| M16x2 | E63-016 | 653 |
| 19 | A14-019 | 11 |
| | A44-019 | 11 |
| | A49-019 | 11 |
| 20 | A14-020 | 13 |
| | C15-020 | 13 |
| M22x1.5 | E33-050 | 601 |
| M24x1.5 | E23-024 | 663 |
| 25 | A14-025 | 15 |
| | A44-025 | 15 |
| | A49-025 | 15 |
| | D02-025 | 15 |
| M28x1.5 | E58-028 | 29 |
| M30x1.5 | E33-075 | 603 |
| 32 | A14-032 | 25 |
| | A34-032 | 25 |
| | A44-032 | 25 |
| | C05-032 | 71 |
| | C20-032 | 69 |
| | D02-032 | 25 |
| | D67-032 | 155 |
| M36x1 | E03-036 | 47 |
| M36x1.5 | E33-095 | 605 |
| 38 | A14-038 | 73 |
| | A19-038 | 535 |
| | A34-038 | 73 |
| | B76-038 | 74 |
| | C05-038 | 74 |
| | C20-038 | 74 |
| | D02-038 | 75 |
| | D67-038 | 75 |
| M38x1.5 | E08-038 | 49 |
| | E23-038 | 31 |
| | E58-038 | 31 |
| | E68-038 | 31 |
| 45 | A14-045 | 79 |
| | A34-045 | 79 |
| | A69-045 | 257 |
| | A74-045 | 257 |
| | B21-045 | 80 |

| Ø | FLANGE | Page |
|---|---|---|
| 45 | B36-045 | 378 |
| | B41-045 | 378 |
| | B51-045 | 106 |
| | B76-045 | 80 |
| | C05-045 | 80 |
| | C20-045 | 80 |
| | D02-045 | 81 |
| | D67-045 | 81 |
| M45x1 | E03-045 | 51 |
| M45x1.5 | E58-045 | 41 |
| 50 | A14-050 | 84 |
| | A19-050 | 543 |
| | A34-050 | 84 |
| | A49-050 | 545 |
| | A54-050 | 545 |
| | A59-050 | 545 |
| | A94-050 | 348 |
| | B13-050 | 382 |
| | B18-050 | 382 |
| | B21-050 | 84 |
| | B28-050 | 382 |
| | B31-050 | 601 |
| | B36-050 | 300 |
| | B41-050 | 300 |
| | B51-050 | 106 |
| | B56-050 | 348 |
| | B61-050 | 349 |
| | B71-050 | 349 |
| | B76-050 | 84 |
| | B91-050 | 349 |
| | B98-050 | 382 |
| | C05-050 | 85 |
| | C20-050 | 85 |
| | C35-050 | 264 |
| | C50-050 | 264 |
| | C55-050 | 297 |
| | D02-050 | 85 |
| | D47-050 | 349 |
| | D67-050 | 85 |
| | D82-050 | 383 |
| M50x1.5 | E58-050 | 45 |
| 63 | A14-063 | 127 |
| | A39-063 | 127 |
| | A69-063 | 128 |
| | B21-063 | 270 |

| Ø | FLANGE | Page |
|---|---|---|
| 63 | B36-063 | 317 |
| | B41-063 | 317 |
| | B76-063 | 270 |
| | C05-063 | 128 |
| | C30-063 | 128 |
| | C35-063 | 128 |
| | C55-063 | 313 |
| | D02-063 | 129 |
| | D67-063 | 129 |
| 75 | A14-075 | 88 |
| | A19-075 | 559 |
| | A34-075 | 88 |
| | A49-075 | 561 |
| | A54-075 | 561 |
| | A59-075 | 561 |
| | A94-075 | 354 |
| | B13-075 | 390 |
| | B18-075 | 390 |
| | B21-075 | 88 |
| | B23-075 | 390 |
| | B31-075 | 603 |
| | B36-075 | 324 |
| | B41-075 | 324 |
| | B56-075 | 354 |
| | B61-075 | 354 |
| | B66-075 | 355 |
| | B71-075 | 355 |
| | B76-075 | 88 |
| | B91-075 | 355 |
| | B98-075 | 390 |
| | C05-075 | 89 |
| | C20-075 | 89 |
| | C55-075 | 321 |
| | D02-075 | 89 |
| | D47-075 | 355 |
| | D67-075 | 89 |
| | D82-075 | 391 |
| 95 | A14-095 | 92 |
| | A19-095 | 567 |
| | A34-095 | 92 |
| | A49-095 | 569 |
| | A54-095 | 569 |
| | A59-095 | 569 |
| | A94-095 | 360 |
| | B13-095 | 394 |

AZOL GAS

# FLANGE INDEX


| Ø | FLANGE | Page |
|---|---|---|
| 95 | B16-095 | 107 |
| | B18-095 | 394 |
| | B21-095 | 92 |
| | B23-095 | 394 |
| | B28-095 | 394 |
| | B31-095 | 605 |
| | B36-095 | 444 |
| | B41-095 | 444 |
| | B56-095 | 360 |
| | B61-095 | 361 |
| | B66-095 | 361 |
| | B71-095 | 361 |
| | B76-095 | 92 |
| | B91-095 | 361 |
| | B98-095 | 395 |
| | C05-095 | 93 |
| | C20-095 | 93 |
| | D02-095 | 93 |
| | D67-095 | 93 |
| 105 | A14-105 | 340 |
| | B36-105 | 340 |
| | B41-105 | 340 |
| | C55-105 | 337 |
| 120 | A14-120 | 96 |
| | A34-120 | 96 |
| | A94-120 | 364 |
| | B13-120 | 398 |
| | B16-120 | 107 |
| | B18-120 | 398 |
| | B21-120 | 96 |
| | B23-120 | 398 |
| | B28-120 | 398 |
| | B36-120 | 448 |
| | B41-120 | 448 |
| | B56-120 | 364 |
| | B61-120 | 365 |
| | B66-120 | 365 |
| | B71-120 | 365 |
| | B76-120 | 96 |
| | C05-120 | 97 |
| | C20-120 | 97 |
| | D02-120 | 97 |
| | D67-120 | 97 |
| 150 | A14-150 | 100 |
| | A34-150 | 100 |
| 150 | A94-150 | 368 |
| | B16-150 | 107 |
| | B21-150 | 100 |
| | B36-150 | 452 |
| | B41-150 | 452 |
| | B56-150 | 368 |
| | B61-150 | 368 |
| | B66-150 | 369 |
| | B71-150 | 369 |
| | B76-150 | 100 |
| | C05-150 | 101 |
| | C20-150 | 101 |
| | D02-150 | 101 |
| | D67-150 | 101 |
| 195 | A14-195 | 104 |
| | A34-195 | 104 |
| | B21-195 | 104 |
| | B36-195 | 460 |
| | B41-195 | 460 |
| | B76-195 | 104 |
| | C05-195 | 105 |
| | C20-195 | 105 |
| | D02-195 | 105 |





AZOL GAS

Landalucía, 7
P.I. Júndiz
01015 Vitoria-Gasteiz
Tel.: +34 945 290 010
Fax: +34 945 290 381

*azolgas@azolgas.com*
**www.azolgas.com**